Olivencia, Mildred

From: [redacted]
Sent: Wednesday, April 29, 2015 12:34 PM
To: Olivencia, Mildred
Cc: Torres Rojas, Genara; Van Duyne, Sheree; Ng, Danny
Subject: Freedom of Information Online Request Form

Information:

First Name: Kathleen
Last Name: Verret
Company: Self
Mailing Address 1: [redacted]
Mailing Address 2:
City: [redacted]
State: [redacted]
Zip Code: [redacted]
Email Address: [redacted]
Phone: [redacted]
Required copies of the records: Yes

List of specific record(s):
Please provide copies of the lease and contracts between the PANYNJ and Airport Plazas for the operation of the fueling stations at the Newark Liberty Airport and JFK International airport. Emailing the leasescontracts to my email address above is sufficient.

THE PORT AUTHORITY OF NY & NJ

FOI Administrator

January 15, 2016

Ms. Kathleen Verret
[redacted]

Re: Freedom of Information Reference No. 15981

Dear Ms. Verret:

This is in response to your April 29, 2015 request, which has been processed under the Port Authority's Freedom of Information Code (the "Code", copy enclosed) for copies of the lease and contracts between the PANYNJ and Airport Plazas for the operation of the fueling stations at the Newark Liberty International Airport and JFK International Airport.

Material responsive to your request and available under the Code can be found on the Port Authority's website at http://www.panynj.gov/corporate-information/foi/15981-LPA.pdf. Paper copies of the available records are available upon request.

Pursuant to the Code, certain portions of the material responsive to your request are exempt from disclosure as, among other classifications, privacy and security.

Please refer to the above FOI reference number in any future correspondence relating to your request.

Very truly yours,

Danny Ng
FOI Administrator

Enclosure

4 World Trade Center, 18th Floor
150 Greenwich Street
New York, NY 10007
T: 212 435 3642 F: 212 435 7555

THIS AGREEMENT SHALL NOT BE BINDING UPON THE PORT AUTHORITY UNTIL DULY EXECUTED BY AN EXECUTIVE OFFICER THEREOF AND DELIVERED TO THE LESSEE AND SUBLESSEE BY AN AUTHORIZED REPRESENTATIVE OF THE PORT AUTHORITY

Lease No. ANB-862
Newark Liberty International Airport

CONSENT TO SUBLEASE AGREEMENT

THIS CONSENT AGREEMENT, dated as of June 1, 2010 (hereinafter referred to as the "Effective Date"), by and among **THE PORT AUTHORITY OF NEW YORK AND NEW JERSEY** (hereinafter called the "Port Authority"), **GAZ REALTY, INC.**, (hereinafter called the "Lessee"), and **7-ELEVEN, INC.**, a corporation of the State of Texas (hereinafter called the "Sublessee"), with an office and place of business at 1075 Cranbury South River Road, Suite 4, Jamesburg, NJ 08831 whose representative is Peter Kibildis, Senior Real Estate Representative.

WITNESSETH, That:

WHEREAS, the Port Authority leased to the Lessee and the Lessee hired and took from the Port Authority certain premises (hereinafter called the "Premises") at Newark Liberty International Airport (hereinafter called the "Airport") as described in a certain agreement of lease made effective July 31, 2008, and identified by Port Authority Lease Agreement No. ANB-862 (said agreement of lease, as the same may hereafter be supplemented and amended, being hereinafter called the "Lease"); and

WHEREAS, the Lessee has requested the consent of the Port Authority to the attached proposed sublease agreement (herein called the "Sublease") between the Lessee and the Sublessee effective as of June 1, 2010;

NOW, THEREFORE, for and in consideration of the covenants and mutual agreements herein contained, the Port Authority, the Lessee and the Sublessee hereby agree, as follows:

1. On the terms and conditions hereinafter set forth, the Port Authority consents to the Sublease.

2. Notwithstanding any provision of the Sublease to the contrary, both this Consent Agreement and the Sublease shall terminate, without notice to the Lessee or the Sublessee, on the earlier to occur of the day preceding the date of expiration or earlier termination of the Lease or the Sublease, or such earlier date for the expiration or termination of the Sublease as the Lessee and the Sublessee may agree upon. The Sublessee shall quit the Premises and remove its property for which it is responsible therefrom on or before termination of the Sublease.

3. Except where expressly required or permitted herein to be oral, all notices, directions, requests, consents and approvals required to be given to or by either party shall be in writing, and all such notices and requests shall be personally delivered to the duly designated officer or representative of such party or delivered to the office of such officer or representative during regular business hours, or forwarded to him or to the party at such address by registered or certified mail. Said designated officer or representative of the Port Authority and the Lessee and their respective offices shall be as set forth in the Lease and Sublease. The Sublessee shall from time to time designate in writing an office within the Port of New York District and an officer or representative whose regular place of business is at such office upon whom notices and requests may be served. Until further notice, the Sublessee designates the representative named on the first page of this Consent Agreement as its representative upon whom notices and requests may be served and its address stated on the first page of this Consent Agreement as its office where notices and requests may be served. If mailed, the notices herein required to be served shall be deemed effective and served as of the date of the registered or certified mailing thereof.

4. The Sublessee hereby agrees to the terms and provisions contained in the exhibit attached hereto, hereby made a part hereof and marked Exhibit A. The terms and provisions of Exhibit A shall have the same force and effect as if herein set forth in full.

[THE REMAINDER OF THIS PAGE WAS INTENTIONALLY LEFT BLANK]

5. This Consent Agreement consists of the following: paragraphs 1 through 5, inclusive, Exhibit A and the Sublease Agreement attached hereto. It constitutes the entire agreement of the parties on the subject matter hereof and may not be changed, modified, discharged or extended except by written instrument duly executed by the Port Authority, the Lessee and the Sublessee.

IN WITNESS WHEREOF, the Port Authority, the Lessee and the Sublessee have executed these presents.

ATTEST:

Karen E. Eastman
Secretary

THE PORT AUTHORITY OF NEW YORK AND NEW JERSEY

By Jonne Ciccolello, Manager Properties & Commercial Development

for David Kagan
Assistant Director
Business, Properties & Airport Development

(Title) _____ (Seal)

ATTEST:

Secretary

GAZ REALTY INC.

By _____

(Title) GAZ Realty Inc. Seal 1994 New York President
(Corporate Seal)

ATTEST:

Robin D. Bryant
Assistant Secretary
Robin D. Bryant

7-ELEVEN, INC.

By _____

Print Name Arthur E. Rubinett

(Title) Vice President
(Corporate Seal)

Port Authority Use Only:	
Approval as to Terms:	Approval as to Form:
	LLF

LLF/mmw

EXHIBIT A

Terms and Conditions for
Consent to Sublease Agreement

1. If the Lessee shall at any time be in default under the Lease, the Sublessee shall on demand of the Port Authority pay directly to the Port Authority any rental, fee or other amount due to the Lessee. No such payment shall relieve the Lessee from any obligation under the Lease or under this Consent Agreement, but all such payments shall be credited against the obligations of the Lessee or of the Sublessee, as the Port Authority may determine for each payment or part thereof.

2. (a) Neither this Consent Agreement nor anything contained herein nor the consent granted hereunder shall constitute or be deemed to constitute a consent to nor shall they create an inference or implication that there has been consent to any enlargement, variation or change in the rights and privileges granted to the Lessee under the Lease, nor consent to the granting or conferring any rights, powers or privileges to the Sublessee as may be provided by the Sublease if not granted to the Lessee under the Lease, nor shall they impair or affect any of the duties, liabilities and obligations imposed on the Lessee under the Lease. The Sublease is an agreement between the Lessee and the Sublessee with respect to the various matters set forth therein. Neither this Consent Agreement nor anything contained herein nor the consent granted hereunder shall constitute an agreement between the Port Authority and the Lessee that the provisions of the Sublease shall apply and pertain as between the Lessee and the Port Authority, it being understood that the terms, provisions, conditions and agreements of the Lease shall, in all respects, be controlling, effective and determinative. It is the intention of the Port Authority hereunder merely to permit the exercise of the Lessee's rights and privileges thereunder by the Lessee (to the extent permitted by the Lease and this Consent Agreement). The specific mention of or reference to the Port Authority in any part of the Sublease including without limitation thereto any mention of any consent or approval of the Port Authority now or hereafter to be obtained, shall not be or be deemed to create an inference that the Port Authority has granted its consent or approval thereto under this Consent Agreement or shall hereafter grant its consent or approval thereto or that the subject matter as to which the consent or approval applies has been or shall be approved or consented to in principle or in fact or that the Port Authority's discretion as to granting any such consents or approvals shall in any way be affected or impaired. The lack of any specific reference in any provision of the Sublease to Port Authority approval or consent shall not be deemed to imply that no such approval or consent is required and the Lease shall in all respects be controlling, effective and determinative.

(b) No provisions of the Sublease, including but not limited to those imposing obligations on the Sublessee with respect to laws, rules, regulations, taxes, assessments and liens, shall be construed as a submission or admission by the Port Authority that the same could or does lawfully apply to the Port Authority, nor shall the existence of any provision of the Sublease covering action which may be undertaken by the Lessee or the Sublessee including but not limited to those involving signs, construction, insurance, assignment and subletting, be deemed to imply or infer that Port Authority consent or approval thereto has or will be given or that Port Authority discretion with respect thereto will in any way be affected or impaired. References in this paragraph to specific matters and provisions as contained in the Sublease shall not be construed as indicating any limitation upon the rights of the Port Authority with respect to its discretion as to granting or

withholding approvals or consents as to other matters and provisions in the Sublease which are not specifically referred to herein.

(c) With respect to this Consent Agreement, the Lessee and the Sublessee understand and agree that although the Lessee is permitted under the Lease to perform services and functions for itself the Lessee may not and is expressly prohibited from performing any services or functions at the Airport for the Sublessee (even though the Lessee may perform the same for itself pursuant to the Lease) which are performed by organizations at the Airport authorized by permit from the Port Authority to perform such services or functions, unless the Lessee is specifically authorized by permit to perform such services or functions for other aircraft operators at the Airport and the Premises and in such event said services and functions shall be performed pursuant thereto. The Lessee, however, may make the necessary arrangements with the authorized organizations performing such services or functions at the Airport to have such services or functions performed for the Sublessee by such organizations or the Sublessee may perform such services and functions itself.

3. (a) (1) "Sublease Rent" shall include all rental payments payable to the Lessee by the Sublessee as such rental is defined in Section 4A (1) and (2) of the Lease.

(2) Effective as of the Effective Date, the Lessee and the Sublessee as a joint and several obligation shall pay to the Port Authority a fee (hereinafter called the "Consent Fee") at the times set forth in and in accordance with subparagraph (3) below.

(3) The Consent Fee shall be paid to the Port Authority by the Lessee and the Sublessee as a joint and several obligation as follows: On the 20th day of each and every calendar month during the time this Consent Agreement shall remain in effect and including the calendar month following the expiration or earlier termination of this Consent Agreement, the Lessee or the Sublessee shall render to the Port Authority a statement sworn to by a responsible fiscal or executive officer of the Lessee or the Sublessee showing all the Sublease Rent paid or payable for the preceding month and the Lessee or the Sublessee shall pay to the Port Authority at the time of rendering such statement an amount equal to ten percent (10%) applied to the Sublease Rent paid or payable for such preceding month, provided, however, if this Consent Agreement shall expire or be terminated effective on a day other than the last day of a calendar month, the final payment of the Consent Fee shall be due and payable within five (5) days after the effective date of such expiration or termination. Payments made hereunder shall be made to the Port Authority of New York and New Jersey, P.O. Box 95000-1517, Philadelphia, PA 19195-1517, or via the following wire transfer instructions: Bank: TD Bank, Bank ABA Number: 031201360, Account Number 5950011618; or to such other address as may hereafter be substituted therefor by the Port Authority, from time to time, by notice to the Lessee and the Sublessee. If the Lessee or the Sublessee have not rendered the aforesaid monthly statement(s) as of the time of execution of this Consent Agreement, and without limiting the generality of any other term or provision hereof, the Lessee or the Sub-sublessee shall submit the monthly statement(s) provided for above and pay, at the time of execution and delivery of this Agreement to the Port Authority, an amount equal to the Consent Fee payable for the period from the Effective Date, to the time of delivery of this Consent Agreement to the Port Authority executed by the Lessee and the Sublessee.

(4) There shall be excluded from Sublease Rent any sum paid by the Sublessee to the Lessee for building janitorial services provided said sum is separately stated to and

paid by the Sublessee and there shall be excluded from Sublease Rent any sum paid by the Sublessee to the Lessee for building maintenance services provided said sum is separately stated to and paid by the Sublessee and, provided further, the Sublessee and the Lessee each acknowledge and agree that the Port Authority does and shall continue to have the right at any time and from time to time to withdraw the foregoing exclusions from Sublease Rent, in whole or in part, or to establish a separate fee for each such service, which may be a percentage fee other that ten percent (10%), upon sixty (60) days' prior written notice to the Sublessee and the Lessee.

(5) (i) It is understood and agreed by the Lessee that the Consent Fee shall be additional rent under the Lease.

(ii) The obligation of the Sublessee to pay the Consent Fee shall be and be deemed a promise to pay a sum of money by the Sublessee to the Port Authority and shall be recoverable by the Port Authority from the Sublessee in the same manner and with like remedies as a sum of money owed to the Port Authority, provided, however, nothing herein shall preclude the Port Authority from joining the Sublessee in a summary proceeding against the Lessee.

(6) In connection with the payment of the Consent Fee hereunder the Lessee and the Sublessee shall each, from and after the Effective Date through the remainder of the time this Consent Agreement shall remain in effect, maintain in accordance with accepted accounting practice, for one (1) year after expiration or earlier termination thereof, and for a further period extending until the Lessee shall receive written permission from the Port Authority to do otherwise, records and books of account recording all transactions in any wise connected with the Sublease and the Sublessee's use and occupancy of the Premises, which records and books of account shall be kept at all times within the Port of New York District. Further the Lessee and the Sublessee shall each permit in ordinary business hours during the time the Sublease shall remain in effect, and for one year thereafter, the examination and audit by the officers, employees and representatives of the Port Authority of such records and books of account.

(7) Neither a partnership nor any joint adventure is hereby created or implied notwithstanding the fact that the Consent Fee to be paid hereunder is an obligation of the Sublessee and the Lessee and shall be determined based upon a percentage of the Sublease Rent.

(8) Neither the Lessee nor the Sublessee shall divert or allow to be diverted from payment under the Sublease any revenues arising out of or in connection with the Sublease or the Sublessee's use and occupancy of the Premises.

(b) Nothing contained herein including without limitation the obligation of the Sublessee to pay the Consent Fee nor the payment thereof by the Sublessee nor the acceptance thereof by the Port Authority shall create or be deemed to have created a landlord tenant relationship or privity of estate between the Port Authority and the Sublessee nor shall be or be deemed to be an attornment by the Sublessee to the Port Authority nor acceptance thereof by the Port Authority and the Sublease and the occupancy by the Sublessee of the Premises shall in all events be and remain subject and subordinate to the Lease.

4. If the Lessee or the Sublessee should fail to pay any amount required under this Consent Agreement when due to the Port Authority, including without limitation any payment of the

Consent Fee, or any other fees, or any payment of utility or other charges, or if any such amount is found to be due as the result of an audit, then, in such event, the Port Authority may impose (by statement, bill or otherwise) a late charge with respect to each such unpaid amount for each late charge period hereinbelow described) during the entirety of which such amounts remain unpaid, each such late charge not to exceed an amount equal to eight-tenths of one percent (.8%) of such unpaid amount for each late charge period. There shall be twenty-four (24) late charge periods during each calendar year; each late charge period shall be for a period of at least fifteen (15) calendar days except one late charge period each calendar year may be for a period of less than fifteen (15) (but not less than thirteen (13)) calendar days. Without limiting the generality of the foregoing, late charge periods in the case of amounts found to have been owing to the Port Authority as the result of Port Authority audit findings shall consist of each late charge period following the date the unpaid amount should have been paid under this Consent Agreement. Each late charge shall be payable immediately upon demand made at any time therefor by the Port Authority. No acceptance by the Port Authority of payment of any unpaid amount or of any unpaid late charge shall be deemed a waiver of the right of the Port Authority to payment of any late charge or late charges payable under the provisions of this paragraph, with respect to such unpaid amount. Nothing in this paragraph is intended to, or shall be deemed to affect, alter, modify or diminish in any way (i) any rights of the Port Authority under this Consent Agreement, including without limitation the Port Authority's rights set forth in paragraph 8 hereof or (ii) any obligations of the Lessee or the Sublessee under this Consent Agreement. In the event that any late charge imposed pursuant to this paragraph shall exceed a legal maximum applicable to such late charge, then, in such event, each such late charge payable under this Consent Agreement shall be payable instead at such legal maximum.

5. The Consent Fee payable under this Consent Agreement shall be subject to increase from time to time upon thirty (30) days' notice from the Port Authority to the Lessee and the Sublessee and upon the effective date of the increase set forth in said notice (which date is herein called the "Fee Increase Date"), the Consent Fee payable by the Lessee and the Sublessee under this Consent Agreement shall be as set forth in said notice. This Consent shall be cancelled and the Sublease shall be terminated effective as of the date immediately preceding the Fee Increase Date without notice to the Lessee or the Sublessee in the event that either (1) the Port Authority shall have received a notice from the Lessee prior to the Fee Increase Date that the Lessee does not wish to pay the increased Consent Fee, or (2) the Port Authority shall have received a notice from the Sublessee prior to the Fee Increase Date that the Sublessee does not wish to pay the increased Consent Fee. If the Port Authority does not receive such a notice from the Lessee or the Sublessee then the increased Consent Fee will become effective on the Fee Increase Date as set forth in the Port Authority's notice. No cancellation of this Consent Agreement pursuant to this paragraph shall or shall be construed to relieve the Lessee or the Sublessee of any obligations or liabilities hereunder which shall have accrued on or before the effective date of such cancellation.

6. The Sublessee, in its operations under and in connection with the Sublease and its use and/or occupancy of the Premises, agrees to assume, observe, be bound by and comply with all the terms, provisions and conditions of the Lease.

7. (a) Without in any wise affecting the obligations of the Lessee under the Lease and under this Consent Agreement and notwithstanding the terms and provisions of the Sublease, the Sublessee shall make repairs and replacements in the portion of the Premises occupied by the

Sublessee as if it were the Lessee under the Lease. In addition, the Sublessee shall indemnify and hold harmless the Port Authority, its Commissioners, officers, employees and representatives from and against (and shall reimburse the Port Authority for their costs and expenses including legal expenses incurred in connection with the defense of) all claims and demands of third persons including but not limited to claims and demands for death, for personal injuries and for property damages, arising out of a breach or default of any term or provision of this Agreement by the Sublessee or out of its operations under the Sublease or at the Premises, or out of the use of the portion of the Premises let to the Sublessee by the Sublessee or by others with its consent, or out of any other acts or omissions of the Sublessee, its officers, employees, agents, representatives, contractors, customers, guests, invitees and others who are doing business with the Sublessee at the portion of the Premises let to the Sublessee, or out of any other acts or omissions of the Sublessee, its officers and employees at the Airport, including claims and demands of the City of Newark from which the Port Authority derives its right in the Airport, for indemnification, arising by operation of law or pursuant to the Basic Lease (as defined in the Lease) whereby the Port Authority has agreed to indemnify the City of Newark against claims. However, all acts and omissions of the Sublessee shall be deemed to be acts and omissions of the Lessee under the Lease and the Lessee shall also be severally responsible therefor, including but not limited to the obligations of indemnification, repair and replacement.

(b) If so directed, the Sublessee shall at its own expense defend any suit based upon any such claim or demand (even if such claim or demand is groundless, false or fraudulent), and in handling such it shall not, without obtaining express advance permission from the General Counsel of the Port Authority, raise any defense involving in any way the jurisdiction of the tribunal over the person of the Port Authority, the immunity of the Port Authority, its Commissioners, officers, agents or employees, the governmental nature of the Port Authority, or the provisions of any statutes respecting suits against the Port Authority.

8. (a) In addition to the insurance required to be maintained by the Lessee under the Lease, the Sublessee during the period the Sublease shall remain in effect shall in its own name as insured and including the Port Authority and the Lessee as additional insureds obtain, maintain and pay the premiums on a policy or policies of Commercial General Liability Insurance, including but not limited to premises-operations and completed operations, covering bodily injury, including death, and property damage liability, none of the foregoing to contain care, custody or control exclusions, and providing for coverage in the limit set forth below. All the aforesaid policy or policies of insurance shall also provide or contain an endorsement providing that the protections afforded the Sublessee thereunder with respect to any claim or action against the Sublessee by a third person shall pertain and apply with like effect with respect to any claim or action against the Sublessee by the Port Authority or the Lessee, or both, but such endorsement shall not limit, vary, change or affect the protections afforded the Port Authority and the Lessee as additional insureds. In addition, the insurance required hereunder shall provide or contain an endorsement providing that the protections afforded the Port Authority or the Lessee, or both, thereunder as additional insureds with respect to any claim or action against the Port Authority or the Lessee, or both, by the Sublessee shall be the same as the protections afforded the Sublessee thereunder with respect to any claim or action against the Sublessee by a third person as if the Port Authority and the Lessee were the named insureds thereunder. Further, the said policy or policies of insurance shall also provide or contain a contractual liability endorsement covering the obligations assumed by the Sublessee under subparagraphs (a) and (b) hereof.

	Minimum Limit
Commercial General Liability: Combined single limit per occurrence for death, bodily injury and property damage liability	$5,000,000.00
Commercial Automobile Liability: Combined single limit per occurrence for death, Bodily injury and property damage liability	$2,000,000.00

(b) Without limiting the provisions hereof, in the event the Sublessee maintains the foregoing insurance in limits greater than aforesaid, the Port Authority shall be included therein as an additional insured to the full extent of all such insurance in accordance with all the terms and provisions hereof.

(c) All insurance coverages and policies required under this paragraph may be reviewed by the Port Authority for adequacy of terms, conditions and limits of coverage at any time and from time to time during the period the Sublease remains in effect. The Port Authority at any such time may make additions, deletions, amendments to or modifications of the above-scheduled insurance requirements, including an increase in such minimum limits, and may require such other and additional insurance, in such reasonable amounts, against such other insurable hazards, as the Port Authority may deem advisable and the Sublessee shall promptly comply therewith.

(d) As to the insurance required by the provisions of this paragraph, a certified copy of the policies or a certificate or certificates or binders satisfactory to the Port Authority evidencing the existence thereof, shall be delivered by the Lessee to the Port Authority upon delivery of this Consent Agreement to the Port Authority. Each policy, certificate or binder delivered as aforesaid shall bear the endorsement of or be accompanied by evidence of payment of the premium thereon. In the event a binder is delivered, it shall be replaced within thirty (30) days by a certified copy of the policy or a certificate. Each such copy or certificate shall contain a valid provision or endorsement, unqualifiedly committing the insurer not to cancel, terminate, change or modify the policy without giving thirty (30) days' written advance notice thereof to the Port Authority. Each such copy or certificate shall contain an additional endorsement providing that the insurance carrier shall not, without obtaining express advance permission from the General Counsel of the Port Authority, raise any defense involving in any way the jurisdiction of the tribunal over the person of the Port Authority, the immunity of the Port Authority, its Commissioners, officers, agents or employees, the governmental nature of the Port Authority or the provisions of any statutes respecting suits against the Port Authority. Any renewal policy shall be delivered to the Port Authority at least thirty (30) days prior to the expiration of each expiring policy, except for any policy expiring after the date of expiration of the term of this Consent. The aforesaid insurance shall be written by a company or companies approved by the Port Authority, the Port Authority agreeing not to withhold its approval unreasonably. If at any time any of the insurance policies shall be or become unsatisfactory to the Port Authority as to form or substance or if any of the carriers issuing such policies shall be or become unsatisfactory to the Port Authority, the Sublessee shall promptly obtain a new and satisfactory policy in replacement thereof. If the Port Authority at any time so requests, a certified copy of each of the policies shall be delivered to the Port Authority.

9. This Consent Agreement may be revoked at any time by the Port Authority without cause on thirty (30) days' notice to the Lessee and the Sublessee and no such revocation shall be deemed to affect the Lease or the continuance thereof, but the Sublease shall be deemed terminated thereby.

10. The granting of this Consent Agreement by the Port Authority shall not be deemed to operate as a waiver of the rights of the Port Authority, or as a consent to any subsequent sublease agreement (by the Lessee or by the Sublessee) or to any assignment of the Lease or to any assignment of the Sublease or of any rights under any of the foregoing, whether in whole or in part.

11. Reference herein to the "Lessee" or the "Sublessee" shall mean and include as to the Lessee and the Sublessee, their respective officers, agents, employees and also others at the Premises or the Airport with the consent of either the Lessee or the Sublessee.

12. The Lessee and the Sublessee hereby represent to the Port Authority that they have complied with and will comply with all laws, governmental rules, regulations and orders now or at any time during the term of the Sublease which as a matter of law are applicable to or which affect the operations of the Lessee and the Sublessee under the Lease or its or their use and/or occupancy of the Premises. The obligation of the Lessee and the Sublessee hereunder to comply with governmental requirements is provided herein for the purpose of assuring proper safeguards for the protection of persons and property. Such provision is not to be construed as a submission by the Port Authority to the application to itself of such requirements or any of them.

13. The Sublessee assures that it will undertake an affirmative action program as required by 14 CFR Part 152, Subpart E, to insure that no person shall on the grounds of race, creed, color, national origin, or sex be excluded from participating in any employment activities covered in 14 CFR Part 152, Subpart E. The Sublessee assures that no person shall be excluded on these grounds from participating in or receiving the services or benefits of any program or activity covered by this subpart. The Sublessee assures that it will require that its covered suborganizations provide assurances to the Sublessee that they similarly will undertake affirmative action programs and that they will require assurances from their suborganizations, as required by 14 CFR Part 152, Subpart E, to the same effect.

14. Nothing contained in this Consent Agreement or the Sublease shall be or deemed to be consent to, or approval of, the erection of any structures, or the making of any improvements, alterations, modifications, additions, repairs or replacements to the Premises including without limitation the installation of any signs at the Airport. The Lessee and Sublessee agree that no construction or installation, as aforesaid, shall be performed without the prior written approval of the Port Authority and subject to the terms and conditions of the Lease and of the Sublease and an approved Alteration Application which the Lessee shall prepare and submit to the Port Authority.

15. The Sublease shall not be changed, modified or extended except by written instrument duly executed by the parties thereto and only with the express prior written consent of the Port Authority.

16. If the Sublessee is obligated by any other agreement to maintain a security deposit with the Port Authority to insure payment and performance by the Sublessee of all fees, rentals, charges and obligations which may become due and owing to the Port Authority arising from the Sublessee's operations at the Airport pursuant to any such other agreement or otherwise, then all such obligations under such other agreement and any deposit pursuant thereto and any interest thereon also shall be deemed obligations of the Sublessee under this Consent Agreement and as security hereunder as well as under any other agreement, all provisions of such agreement with respect to such obligations and any obligations thereunder of the Port Authority as to the security deposit hereby being incorporated herein by this reference as though fully set forth herein and hereby made a part hereof. The termination, revocation, cancellation or expiration of any other agreement to which such security shall apply or any permitted assignment of such other agreement shall not affect such obligations as to such security which shall continue in full force and effect hereunder and additionally as therein provided.

17. Anything in the Sublease to the contrary notwithstanding, this Consent Agreement and the interpretation, validity and enforceability thereof shall be governed by the laws of the State of New Jersey.

18. It shall be understood that any capitalized terms not defined herein shall have the meaning as such terms are defined in the Lease.

19. Neither the Commissioners of the Port Authority nor any of them, nor any officer, agent or employee thereof shall be held personally liable to the Lessee or to the Sublessee under any term or provision of this Consent or because of its execution or because of any breach or alleged breach thereof.

For the Port Authority

Initialed:

For the Lessee

For the Sublessee

Property # 34296

SECOND AMENDMENT TO NEWARK AIRPORT PLAZA SUBLEASE AGREEMENT

THIS SECOND AMENDMENT TO NEWARK AIRPORT PLAZA SUBLEASE AGREEMENT (this "Second Amendment") is made as of the 8th day of June, 2010 by and between GAZ Realty, Inc., a New York corporation (the "Landlord"), and 7-ELEVEN, INC., a Texas corporation (the "Tenant").

WITNESSETH THAT:

WHEREAS, Landlord and Tenant are parties to that certain Newark Airport Plaza Sublease Agreement executed by Landlord on June 5, 2009 and by Tenant on June 29, 2009, as amended by that certain First Amendment to Newark Airport Plaza Sublease Agreement dated as of [2-1-2010] (as so amended, the "Sublease"), covering those certain premises located at Lindbergh Rd. & Ramp, Newark, New Jersey 07114 (the "Premises"); and

WHEREAS, Landlord leases the entire premises described in Exhibit C of the Sublease from The Port Authority of New York & New Jersey (the "Master Landlord"), a body of corporate and politic established by Compact between the States of New York and New Jersey with the consent of the Congress of the United States of America, pursuant to a certain Lease Agreement dated July 31, 2008 (the "Master Lease"); and

WHEREAS, Landlord, Tenant and Master Landlord intend to enter into certain Consent to Sublease Agreement in substantially the form attached hereto as **Exhibit A** (the "Consent Agreement") and that Landlord and Tenant desire to amend the Sublease as provided herein.

NOW, THEREFORE, for and in consideration of the payment of Ten and 00/100 Dollars ($10.00) and other good and valuable consideration, the receipt and sufficiency of which are hereby acknowledged, the parties hereto agree as follows:

1. CONSENT FEE. Landlord and Tenant acknowledge and agree that pursuant to the terms and conditions of the Consent Agreement, Landlord and Tenant are jointly and severally liable for the (a) Consent Fee (as defined in Section 3(a)(2) of Exhibit A to the Consent Agreement), (b) all other charges and fees due and payable under the Consent Agreement, and (c) any other charges and fees which the Master Landlord may from time to time impose upon Landlord and/or Tenant (collectively, the "Consent Charges"). The parties further acknowledge and agree that as between Landlord and Tenant, Landlord shall be responsible for the Consent Charges. In the event that Tenant pays any of the Consent Charges for any reason whatsoever, Tenant may setoff or deduct any Consent Charges so paid by Tenant from the rent or other amounts due under the Sublease. Tenant may also withhold rent to the extent of any damages incurred by Tenant in connection with Tenant's payment of any of the Consent Charges. Tenant shall not be deemed thereby to be in breach of the Sublease, and such right of setting off or withholding rent or other amounts due shall not be deemed the exclusive remedy of or an election of

remedies by, Tenant.

2. LANDLORD'S OBLIGATIONS. If Landlord shall fail to perform or pay for its obligations under the Consent Agreement (collectively, the "CA Obligations"), then Tenant may, at its option, perform or pay for the CA Obligations, in either event as Landlord's agent, in which event Tenant may withhold rent to the extent of expense incurred by Tenant in performing or paying for the CA Obligations. Tenant may also withhold rent to the extent of any damages incurred by Tenant in connection with payment or performance of the CA Obligations. Tenant shall not be deemed thereby to be in breach of the Sublease, and such right of withholding rent and other amounts due shall not be deemed the exclusive remedy of or an election of remedies by, Tenant.

3. TERMINATION OF CONSENT AGREEMENT. (a) In the event that Master Landlord terminates or revokes the Consent Agreement **due to a default by Landlord thereunder**, and as a result of such termination, the Sublease shall be terminated, then Landlord shall pay to Tenant within thirty (30) days following the date of the termination of the Sublease a "Termination Payment" equal to the sum of (i) the unamortized Tenant's Lease Costs (as hereafter defined) as of effective date of such termination of the Consent Agreement and Master Lease, plus (ii) the unamortized amount of the Franchise Fee (as hereafter defined) as of the effective date of such termination of the Sublease, each amortized on a straight line basis over a period of twenty (20) years. "Tenant's Lease Costs" shall be the sum of all hard and soft costs incurred by Tenant in connection with the Sublease and the Premises and other improvements constructed by Tenant thereon for the operation of its business, including, without limitation: (i) attorneys', architects' and engineers' fees, (ii) the costs of all plans, specifications and site studies, (iii) the cost of all alterations, additions and improvements made by Tenant and (iv) the cost of all Fixtures installed at the Premises. The "Franchise Fee" shall be the amount payable by Tenant's franchisee or licensee to Tenant in order to acquire the 7-Eleven franchise at the Premises.

(b) In the event that the Master Landlord terminates or revokes the Consent Agreement **pursuant to Section 9 of Exhibit A thereof** (and not as a result of default by Landlord under the Consent Agreement), and as a result the Sublease shall be terminated, then Landlord shall pay to Tenant within thirty (30) days following the date of the termination of the Sublease the depreciated amount of all hard and soft costs (collectively, the "Store Costs") incurred by Tenant in connection with the Lease, the Consent Agreement and the Premises and other improvements constructed by Tenant thereon for the operation of its business, including, without limitation: (i) attorneys', architects' and engineers' fees, (ii) the costs of all plans, specifications and site studies, (iii) the cost of all alterations, additions and improvements made by Tenant, and (iv) the cost of all Fixtures installed at the Premises. For the purposes of this Section 3 of this Second Amendment, such Store Costs shall be deemed to be $500,000.00 and shall be depreciated over the initial Term of the Lease on a straight line basis.

4. FIXTURES AND EQUIPMENT. In the event that the Master Landlord terminates the Master Lease and/or revokes the Consent Agreement, whether the same is

due to a default by Landlord or without cause (pursuant to Section 9 of the Master Lease), then following payment of monies due from Landlord to Tenant as articulated in the Lease or this Second Amendment, Tenant acknowledges and agrees that all fixtures and equipment used by Tenant at the Premises (but excluding any of Tenant's merchandise, trade fixtures, equipment and personal property) prior to such termination or revocation shall become the property of Landlord. Within ten (10) days after Landlord's written request, Tenant shall execute such documents reasonably required by Landlord in order to evidence and effectuate such transfer of rights to Landlord.

5. RATIFICATION OF LEASE. Except as modified by or where inconsistent with this Second Amendment, the Lease is hereby ratified and confirmed. The rent and other amounts owed by Tenant pursuant to the terms of the Lease shall remain unchanged. Where inconsistent, the terms of this Second Amendment shall supersede and take precedence over the Lease. Unless the context requires otherwise, all terms used herein shall be construed in conformity with the applicable provisions of the Lease.

[*Remainder of page intentionally left blank.*]

IN WITNESS WHEREOF, the parties have executed this Second Amendment under seal as of the day and year first above written.

LANDLORD:

GAZ REALTY, INC., a New York corporation

By: _____
Name: GEORGE ABI ZEID
Title: PRESIDENT/CEO
hereunto duly authorized

Name: _____

TENANT:

7-ELEVEN, INC., a Texas corporation

By: _____
Name: BRIAN HOLLAND
Title: ATTORNEY-IN-FACT
hereunto duly authorized

Attest:
By: _____
Name: MARGARET SMITH
Title: ASSISTANT SECRETARY

Exhibit A

Consent Agreement

[*See attached.*]

THIS AGREEMENT SHALL NOT BE BINDING UPON THE PORT AUTHORITY UNTIL DULY EXECUTED BY AN EXECUTIVE OFFICER THEREOF AND DELIVERED TO THE LESSEE AND SUBLESSEE BY AN AUTHORIZED REPRESENTATIVE OF THE PORT AUTHORITY

Lease No. ANB-862
Newark Liberty International Airport

CONSENT TO SUBLEASE AGREEMENT

THIS CONSENT AGREEMENT, dated as of June 1, 2010 (hereinafter referred to as the "Effective Date"), by and among **THE PORT AUTHORITY OF NEW YORK AND NEW JERSEY** (hereinafter called the "Port Authority"), **GAZ REALTY, INC.**, (hereinafter called the "Lessee"), and **7-ELEVEN, INC.**, a corporation of the State of Texas (hereinafter called the "Sublessee"), with an office and place of business at 1075 Cranbury South River Road, Suite 4, Jamesburg, NJ 08831 whose representative is Peter Kibildis, Senior Real Estate Representative.

WITNESSETH, That:

WHEREAS, the Port Authority leased to the Lessee and the Lessee hired and took from the Port Authority certain premises (hereinafter called the "Premises") at Newark Liberty International Airport (hereinafter called the "Airport") as described in a certain agreement of lease made effective July 31, 2008, and identified by Port Authority Lease Agreement No. ANB-862 (said agreement of lease, as the same may hereafter be supplemented and amended, being hereinafter called the "Lease"); and

WHEREAS, the Lessee has requested the consent of the Port Authority to the attached proposed sublease agreement (herein called the "Sublease") between the Lessee and the Sublessee effective as of June 1, 2010;

NOW, THEREFORE, for and in consideration of the covenants and mutual agreements herein contained, the Port Authority, the Lessee and the Sublessee hereby agree, as follows:

1. On the terms and conditions hereinafter set forth, the Port Authority consents to the Sublease.

2. Notwithstanding any provision of the Sublease to the contrary, both this Consent Agreement and the Sublease shall terminate, without notice to the Lessee or the Sublessee, on the earlier to occur of the day preceding the date of expiration or earlier termination of the Lease or the Sublease, or such earlier date for the expiration or termination of the Sublease as the Lessee and the Sublessee may agree upon. The Sublessee shall quit the Premises and remove its property for which it is responsible therefrom on or before termination of the Sublease.

3. Except where expressly required or permitted herein to be oral, all notices, directions, requests, consents and approvals required to be given to or by either party shall be in writing, and all such notices and requests shall be personally delivered to the duly designated officer or representative of such party or delivered to the office of such officer or representative during regular business hours, or forwarded to him or to the party at such address by registered or certified mail. Said designated officer or representative of the Port Authority and the Lessee and their respective offices shall be as set forth in the Lease and Sublease. The Sublessee shall from time to time designate in writing an office within the Port of New York District and an officer or representative whose regular place of business is at such office upon whom notices and requests may be served. Until further notice, the Sublessee designates the representative named on the first page of this Consent Agreement as its representative upon whom notices and requests may be served and its address stated on the first page of this Consent Agreement as its office where notices and requests may be served. If mailed, the notices herein required to be served shall be deemed effective and served as of the date of the registered or certified mailing thereof.

4. The Sublessee hereby agrees to the terms and provisions contained in the exhibit attached hereto, hereby made a part hereof and marked Exhibit A. The terms and provisions of Exhibit A shall have the same force and effect as if herein set forth in full.

[THE REMAINDER OF THIS PAGE WAS INTENTIONALLY LEFT BLANK]

5. This Consent Agreement consists of the following: paragraphs 1 through 5, inclusive, Exhibit A and the Sublease Agreement attached hereto. It constitutes the entire agreement of the parties on the subject matter hereof and may not be changed, modified, discharged or extended except by written instrument duly executed by the Port Authority, the Lessee and the Sublessee.

IN WITNESS WHEREOF, the Port Authority, the Lessee and the Sublessee have executed these presents.

ATTEST:

_____
Secretary

THE PORT AUTHORITY OF NEW YORK AND NEW JERSEY

By_____

(Title)_____
(Seal)

ATTEST:

Secretary

GAZ REALTY INC.

By

(Title) President
(Corporate Seal)

ATTEST:

Assistant Secretary
Robin D. Bryant

7-ELEVEN, INC.

By

Print Name Arthur E. Rubinett

(Title) Vice President
(Corporate Seal)

Port Authority Use Only	
Approval as to Terms	Approval as to Form

LLF/mmw

EXHIBIT A

Terms and Conditions for
Consent to Sublease Agreement

1. If the Lessee shall at any time be in default under the Lease, the Sublessee shall on demand of the Port Authority pay directly to the Port Authority any rental, fee or other amount due to the Lessee. No such payment shall relieve the Lessee from any obligation under the Lease or under this Consent Agreement, but all such payments shall be credited against the obligations of the Lessee or of the Sublessee, as the Port Authority may determine for each payment or part thereof.

2. (a) Neither this Consent Agreement nor anything contained herein nor the consent granted hereunder shall constitute or be deemed to constitute a consent to nor shall they create an inference or implication that there has been consent to any enlargement, variation or change in the rights and privileges granted to the Lessee under the Lease, nor consent to the granting or conferring any rights, powers or privileges to the Sublessee as may be provided by the Sublease if not granted to the Lessee under the Lease, nor shall they impair or affect any of the duties, liabilities and obligations imposed on the Lessee under the Lease. The Sublease is an agreement between the Lessee and the Sublessee with respect to the various matters set forth therein. Neither this Consent Agreement nor anything contained herein nor the consent granted hereunder shall constitute an agreement between the Port Authority and the Lessee that the provisions of the Sublease shall apply and pertain as between the Lessee and the Port Authority, it being understood that the terms, provisions, conditions and agreements of the Lease shall, in all respects, be controlling, effective and determinative. It is the intention of the Port Authority hereunder merely to permit the exercise of the Lessee's rights and privileges thereunder by the Lessee (to the extent permitted by the Lease and this Consent Agreement). The specific mention of or reference to the Port Authority in any part of the Sublease including without limitation thereto any mention of any consent or approval of the Port Authority now or hereafter to be obtained, shall not be or be deemed to create an inference that the Port Authority has granted its consent or approval thereto under this Consent Agreement or shall hereafter grant its consent or approval thereto or that the subject matter as to which the consent or approval applies has been or shall be approved or consented to in principle or in fact or that the Port Authority's discretion as to granting any such consents or approvals shall in any way be affected or impaired. The lack of any specific reference in any provision of the Sublease to Port Authority approval or consent shall not be deemed to imply that no such approval or consent is required and the Lease shall in all respects be controlling, effective and determinative.

(b) No provisions of the Sublease, including but not limited to those imposing obligations on the Sublessee with respect to laws, rules, regulations, taxes, assessments and liens, shall be construed as a submission or admission by the Port Authority that the same could or does lawfully apply to the Port Authority, nor shall the existence of any provision of the Sublease covering action which may be undertaken by the Lessee or the Sublessee including but not limited to those involving signs, construction, insurance, assignment and subletting, be deemed to imply or infer that Port Authority consent or approval thereto has or will be given or that Port Authority discretion with respect thereto will in any way be affected or impaired. References in this paragraph to specific matters and provisions as contained in the Sublease shall not be construed as indicating any limitation upon the rights of the Port Authority with respect to its discretion as to granting or

withholding approvals or consents as to other matters and provisions in the Sublease which are not specifically referred to herein.

(c) *With respect to this Consent Agreement, the Lessee and the Sublessee* understand and agree that although the Lessee is permitted under the Lease to perform services and functions for itself the Lessee may not and is expressly prohibited from performing any services or functions at the Airport for the Sublessee (even though the Lessee may perform the same for itself pursuant to the Lease) which are performed by organizations at the Airport authorized by permit from the Port Authority to perform such services or functions, unless the Lessee is specifically authorized by permit to perform such services or functions for other aircraft operators at the Airport and the Premises and in such event said services and functions shall be performed pursuant thereto. The Lessee, however, may make the necessary arrangements with the authorized organizations performing such services or functions at the Airport to have such services or functions performed for the Sublessee by such organizations or the Sublessee may perform such services and functions itself.

3. (a) (1) "Sublease Rent" shall include all rental payments payable to the Lessee by the Sublessee as such rental is defined in Section 4A (1) and (2) of the Lease.

(2) Effective as of the Effective Date, the Lessee and the Sublessee as a joint and several obligation shall pay to the Port Authority a fee (hereinafter called the "Consent Fee") at the times set forth in and in accordance with subparagraph (3) below.

(3) The Consent Fee shall be paid to the Port Authority by the Lessee and the Sublessee as a joint and several obligation as follows: On the 20th day of each and every calendar month during the time this Consent Agreement shall remain in effect and including the calendar month following the expiration or earlier termination of this Consent Agreement, the Lessee or the Sublessee shall render to the Port Authority a statement sworn to by a responsible fiscal or executive officer of the Lessee or the Sublessee showing all the Sublease Rent paid or payable for the preceding month and the Lessee or the Sublessee shall pay to the Port Authority at the time of rendering such statement an amount equal to ten percent (10%) applied to the Sublease Rent paid or payable for such preceding month, provided, however, if this Consent Agreement shall expire or be terminated effective on a day other than the last day of a calendar month, the final payment of the Consent Fee shall be due and payable within five (5) days after the effective date of such expiration or termination. Payments made hereunder shall be made to the Port Authority of New York and New Jersey, P.O. Box 95000-1517, Philadelphia, PA 19195-1517, or via the following wire transfer instructions: Bank: TD Bank, Bank ABA Number: 031201360, Account Number or to such other address as may hereafter be substituted therefor by the Port Authority, from time to time, by notice to the Lessee and the Sublessee. If the Lessee or the Sublessee have not rendered the aforesaid monthly statement(s) as of the time of execution of this Consent Agreement, and without limiting the generality of any other term or provision hereof, the Lessee or the Sub-sublessee shall submit the monthly statement(s) provided for above and pay, at the time of execution and delivery of this Agreement to the Port Authority, an amount equal to the Consent Fee payable for the period from the Effective Date, to the time of delivery of this Consent Agreement to the Port Authority executed by the Lessee and the Sublessee.

(4) There shall be excluded from Sublease Rent any sum paid by the Sublessee to the Lessee for building janitorial services provided said sum is separately stated to and

paid by the Sublessee and there shall be excluded from Sublease Rent any sum paid by the Sublessee to the Lessee for building maintenance services provided said sum is separately stated to and paid by the Sublessee and, provided further, the Sublessee and the Lessee each acknowledge and agree that the Port Authority does and shall continue to have the right at any time and from time to time to withdraw the foregoing exclusions from Sublease Rent, in whole or in part, or to establish a separate fee for each such service, which may be a percentage fee other that ten percent (10%), upon sixty (60) days' prior written notice to the Sublessee and the Lessee.

(5) (i) It is understood and agreed by the Lessee that the Consent Fee shall be additional rent under the Lease.

(ii) The obligation of the Sublessee to pay the Consent Fee shall be and be deemed a promise to pay a sum of money by the Sublessee to the Port Authority and shall be recoverable by the Port Authority from the Sublessee in the same manner and with like remedies as a sum of money owed to the Port Authority, provided, however, nothing herein shall preclude the Port Authority from joining the Sublessee in a summary proceeding against the Lessee.

(6) In connection with the payment of the Consent Fee hereunder the Lessee and the Sublessee shall each, from and after the Effective Date through the remainder of the time this Consent Agreement shall remain in effect, maintain in accordance with accepted accounting practice, for one (1) year after expiration or earlier termination thereof, and for a further period extending until the Lessee shall receive written permission from the Port Authority to do otherwise, records and books of account recording all transactions in any wise connected with the Sublease and the Sublessee's use and occupancy of the Premises, which records and books of account shall be kept at all times within the Port of New York District. Further the Lessee and the Sublessee shall each permit in ordinary business hours during the time the Sublease shall remain in effect, and for one year thereafter, the examination and audit by the officers, employees and representatives of the Port Authority of such records and books of account.

(7) Neither a partnership nor any joint adventure is hereby created or implied notwithstanding the fact that the Consent Fee to be paid hereunder is an obligation of the Sublessee and the Lessee and shall be determined based upon a percentage of the Sublease Rent.

(8) Neither the Lessee nor the Sublessee shall divert or allow to be diverted from payment under the Sublease any revenues arising out of or in connection with the Sublease or the Sublessee's use and occupancy of the Premises.

(b) Nothing contained herein including without limitation the obligation of the Sublessee to pay the Consent Fee nor the payment thereof by the Sublessee nor the acceptance thereof by the Port Authority shall create or be deemed to have created a landlord tenant relationship or privity of estate between the Port Authority and the Sublessee nor shall be or be deemed to be an attornment by the Sublessee to the Port Authority nor acceptance thereof by the Port Authority and the Sublease and the occupancy by the Sublessee of the Premises shall in all events be and remain subject and subordinate to the Lease.

4. If the Lessee or the Sublessee should fail to pay any amount required under this Consent Agreement when due to the Port Authority, including without limitation any payment of the

Consent Fee, or any other fees, or any payment of utility or other charges, or if any such amount is found to be due as the result of an audit, then, in such event, the Port Authority may impose (by statement, bill or otherwise) a late charge with respect to each such unpaid amount for each late charge period hereinbelow described) during the entirety of which such amounts remain unpaid, each such late charge not to exceed an amount equal to eight-tenths of one percent (.8%) of such unpaid amount for each late charge period. There shall be twenty-four (24) late charge periods during each calendar year; each late charge period shall be for a period of at least fifteen (15) calendar days except one late charge period each calendar year may be for a period of less than fifteen (15) (but not less than thirteen (13)) calendar days. Without limiting the generality of the foregoing, late charge periods in the case of amounts found to have been owing to the Port Authority as the result of Port Authority audit findings shall consist of each late charge period following the date the unpaid amount should have been paid under this Consent Agreement. Each late charge shall be payable immediately upon demand made at any time therefor by the Port Authority. No acceptance by the Port Authority of payment of any unpaid amount or of any unpaid late charge shall be deemed a waiver of the right of the Port Authority to payment of any late charge or late charges payable under the provisions of this paragraph, with respect to such unpaid amount. Nothing in this paragraph is intended to, or shall be deemed to affect, alter, modify or diminish in any way (i) any rights of the Port Authority under this Consent Agreement, including without limitation the Port Authority's rights set forth in paragraph 8 hereof or (ii) any obligations of the Lessee or the Sublessee under this Consent Agreement. In the event that any late charge imposed pursuant to this paragraph shall exceed a legal maximum applicable to such late charge, then, in such event, each such late charge payable under this Consent Agreement shall be payable instead at such legal maximum.

5. The Consent Fee payable under this Consent Agreement shall be subject to increase from time to time upon thirty (30) days' notice from the Port Authority to the Lessee and the Sublessee and upon the effective date of the increase set forth in said notice (which date is herein called the "Fee Increase Date"), the Consent Fee payable by the Lessee and the Sublessee under this Consent Agreement shall be as set forth in said notice. This Consent shall be cancelled and the Sublease shall be terminated effective as of the date immediately preceding the Fee Increase Date without notice to the Lessee or the Sublessee in the event that either (1) the Port Authority shall have received a notice from the Lessee prior to the Fee Increase Date that the Lessee does not wish to pay the increased Consent Fee, or (2) the Port Authority shall have received a notice from the Sublessee prior to the Fee Increase Date that the Sublessee does not wish to pay the increased Consent Fee. If the Port Authority does not receive such a notice from the Lessee or the Sublessee then the increased Consent Fee will become effective on the Fee Increase Date as set forth in the Port Authority's notice. No cancellation of this Consent Agreement pursuant to this paragraph shall or shall be construed to relieve the Lessee or the Sublessee of any obligations or liabilities hereunder which shall have accrued on or before the effective date of such cancellation.

6. The Sublessee, in its operations under and in connection with the Sublease and its use and/or occupancy of the Premises, agrees to assume, observe, be bound by and comply with all the terms, provisions and conditions of the Lease.

7. (a) Without in any wise affecting the obligations of the Lessee under the Lease and under this Consent Agreement and notwithstanding the terms and provisions of the Sublease, the Sublessee shall make repairs and replacements in the portion of the Premises occupied by the

Sublessee as if it were the Lessee under the Lease. In addition, the Sublessee shall indemnify and hold harmless the Port Authority, its Commissioners, officers, employees and representatives from and against (and shall reimburse the Port Authority for their costs and expenses including legal expenses incurred in connection with the defense of) all claims and demands of third persons including but not limited to claims and demands for death, for personal injuries and for property damages, arising out of a breach or default of any term or provision of this Agreement by the Sublessee or out of its operations under the Sublease or at the Premises, or out of the use of the portion of the Premises let to the Sublessee by the Sublessee or by others with its consent, or out of any other acts or omissions of the Sublessee, its officers, employees, agents, representatives, contractors, customers, guests, invitees and others who are doing business with the Sublessee at the portion of the Premises let to the Sublessee, or out of any other acts or omissions of the Sublessee, its officers and employees at the Airport, including claims and demands of the City of Newark from which the Port Authority derives its right in the Airport, for indemnification, arising by operation of law or pursuant to the Basic Lease (as defined in the Lease) whereby the Port Authority has agreed to indemnify the City of Newark against claims. However, all acts and omissions of the Sublessee shall be deemed to be acts and omissions of the Lessee under the Lease and the Lessee shall also be severally responsible therefor, including but not limited to the obligations of indemnification, repair and replacement.

(b) If so directed, the Sublessee shall at its own expense defend any suit based upon any such claim or demand (even if such claim or demand is groundless, false or fraudulent), and in handling such it shall not, without obtaining express advance permission from the General Counsel of the Port Authority, raise any defense involving in any way the jurisdiction of the tribunal over the person of the Port Authority, the immunity of the Port Authority, its Commissioners, officers, agents or employees, the governmental nature of the Port Authority, or the provisions of any statutes respecting suits against the Port Authority.

8. (a) In addition to the insurance required to be maintained by the Lessee under the Lease, the Sublessee during the period the Sublease shall remain in effect shall in its own name as insured and including the Port Authority and the Lessee as additional insureds obtain, maintain and pay the premiums on a policy or policies of Commercial General Liability Insurance, including but not limited to premises-operations and completed operations, covering bodily injury, including death, and property damage liability, none of the foregoing to contain care, custody or control exclusions, and providing for coverage in the limit set forth below. All the aforesaid policy or policies of insurance shall also provide or contain an endorsement providing that the protections afforded the Sublessee thereunder with respect to any claim or action against the Sublessee by a third person shall pertain and apply with like effect with respect to any claim or action against the Sublessee by the Port Authority or the Lessee, or both, but such endorsement shall not limit, vary, change or affect the protections afforded the Port Authority and the Lessee as additional insureds. In addition, the insurance required hereunder shall provide or contain an endorsement providing that the protections afforded the Port Authority or the Lessee, or both, thereunder as additional insureds with respect to any claim or action against the Port Authority or the Lessee, or both, by the Sublessee shall be the same as the protections afforded the Sublessee thereunder with respect to any claim or action against the Sublessee by a third person as if the Port Authority and the Lessee were the named insureds thereunder. Further, the said policy or policies of insurance shall also provide or contain a contractual liability endorsement covering the obligations assumed by the Sublessee under subparagraphs (a) and (b) hereof.

	Minimum Limit
Commercial General Liability: Combined single limit per occurrence for death, bodily injury and property damage liability	$5,000,000.00
Commercial Automobile Liability: Combined single limit per occurrence for death, Bodily injury and property damage liability	$2,000,000.00

(b) Without limiting the provisions hereof, in the event the Sublessee maintains the foregoing insurance in limits greater than aforesaid, the Port Authority shall be included therein as an additional insured to the full extent of all such insurance in accordance with all the terms and provisions hereof.

(c) All insurance coverages and policies required under this paragraph may be reviewed by the Port Authority for adequacy of terms, conditions and limits of coverage at any time and from time to time during the period the Sublease remains in effect. The Port Authority at any such time may make additions, deletions, amendments to or modifications of the above-scheduled insurance requirements, including an increase in such minimum limits, and may require such other and additional insurance, in such reasonable amounts, against such other insurable hazards, as the Port Authority may deem advisable and the Sublessee shall promptly comply therewith.

(d) As to the insurance required by the provisions of this paragraph, a certified copy of the policies or a certificate or certificates or binders satisfactory to the Port Authority evidencing the existence thereof, shall be delivered by the Lessee to the Port Authority upon delivery of this Consent Agreement to the Port Authority. Each policy, certificate or binder delivered as aforesaid shall bear the endorsement of or be accompanied by evidence of payment of the premium thereon. In the event a binder is delivered, it shall be replaced within thirty (30) days by a certified copy of the policy or a certificate. Each such copy or certificate shall contain a valid provision or endorsement, unqualifiedly committing the insurer not to cancel, terminate, change or modify the policy without giving thirty (30) days' written advance notice thereof to the Port Authority. Each such copy or certificate shall contain an additional endorsement providing that the insurance carrier shall not, without obtaining express advance permission from the General Counsel of the Port Authority, raise any defense involving in any way the jurisdiction of the tribunal over the person of the Port Authority, the immunity of the Port Authority, its Commissioners, officers, agents or employees, the governmental nature of the Port Authority or the provisions of any statutes respecting suits against the Port Authority. Any renewal policy shall be delivered to the Port Authority at least thirty (30) days prior to the expiration of each expiring policy, except for any policy expiring after the date of expiration of the term of this Consent. The aforesaid insurance shall be written by a company or companies approved by the Port Authority, the Port Authority agreeing not to withhold its approval unreasonably. If at any time any of the insurance policies shall be or become unsatisfactory to the Port Authority as to form or substance or if any of the carriers issuing such policies shall be or become unsatisfactory to the Port Authority, the Sublessee shall promptly obtain a new and satisfactory policy in replacement thereof. If the Port Authority at any time so requests, a certified copy of each of the policies shall be delivered to the Port Authority.

9. This Consent Agreement may be revoked at any time by the Port Authority without cause on thirty (30) days' notice to the Lessee and the Sublessee and no such revocation shall be deemed to affect the Lease or the continuance thereof, but the Sublease shall be deemed terminated thereby.

10. The granting of this Consent Agreement by the Port Authority shall not be deemed to operate as a waiver of the rights of the Port Authority, or as a consent to any subsequent sublease agreement (by the Lessee or by the Sublessee) or to any assignment of the Lease or to any assignment of the Sublease or of any rights under any of the foregoing, whether in whole or in part.

11. Reference herein to the "Lessee" or the "Sublessee" shall mean and include as to the Lessee and the Sublessee, their respective officers, agents, employees and also others at the Premises or the Airport with the consent of either the Lessee or the Sublessee.

12. The Lessee and the Sublessee hereby represent to the Port Authority that they have complied with and will comply with all laws, governmental rules, regulations and orders now or at any time during the term of the Sublease which as a matter of law are applicable to or which affect the operations of the Lessee and the Sublessee under the Lease or its or their use and/or occupancy of the Premises. The obligation of the Lessee and the Sublessee hereunder to comply with governmental requirements is provided herein for the purpose of assuring proper safeguards for the protection of persons and property. Such provision is not to be construed as a submission by the Port Authority to the application to itself of such requirements or any of them.

13. The Sublessee assures that it will undertake an affirmative action program as required by 14 CFR Part 152, Subpart E, to insure that no person shall on the grounds of race, creed, color, national origin, or sex be excluded from participating in any employment activities covered in 14 CFR Part 152, Subpart E. The Sublessee assures that no person shall be excluded on these grounds from participating in or receiving the services or benefits of any program or activity covered by this subpart. The Sublessee assures that it will require that its covered suborganizations provide assurances to the Sublessee that they similarly will undertake affirmative action programs and that they will require assurances from their suborganizations, as required by 14 CFR Part 152, Subpart E, to the same effect.

14. Nothing contained in this Consent Agreement or the Sublease shall be or deemed to be consent to, or approval of, the erection of any structures, or the making of any improvements, alterations, modifications, additions, repairs or replacements to the Premises including without limitation the installation of any signs at the Airport. The Lessee and Sublessee agree that no construction or installation, as aforesaid, shall be performed without the prior written approval of the Port Authority and subject to the terms and conditions of the Lease and of the Sublease and an approved Alteration Application which the Lessee shall prepare and submit to the Port Authority.

15. The Sublease shall not be changed, modified or extended except by written instrument duly executed by the parties thereto and only with the express prior written consent of the Port Authority.

16. If the Sublessee is obligated by any other agreement to maintain a security deposit with the Port Authority to insure payment and performance by the Sublessee of all fees, rentals, charges and obligations which may become due and owing to the Port Authority arising from the Sublessee's operations at the Airport pursuant to any such other agreement or otherwise, then all such obligations under such other agreement and any deposit pursuant thereto and any interest thereon also shall be deemed obligations of the Sublessee under this Consent Agreement and as security hereunder as well as under any other agreement, all provisions of such agreement with respect to such obligations and any obligations thereunder of the Port Authority as to the security deposit hereby being incorporated herein by this reference as though fully set forth herein and hereby made a part hereof. The termination, revocation, cancellation or expiration of any other agreement to which such security shall apply or any permitted assignment of such other agreement shall not affect such obligations as to such security which shall continue in full force and effect hereunder and additionally as therein provided.

17. Anything in the Sublease to the contrary notwithstanding, this Consent Agreement and the interpretation, validity and enforceability thereof shall be governed by the laws of the State of New Jersey.

18. It shall be understood that any capitalized terms not defined herein shall have the meaning as such terms are defined in the Lease.

19. Neither the Commissioners of the Port Authority nor any of them, nor any officer, agent or employee thereof shall be held personally liable to the Lessee or to the Sublessee under any term or provision of this Consent or because of its execution or because of any breach or alleged breach thereof.

For the Port Authority

Initialed:

For the Lessee

For the Sublessee

Property # 34296

FIRST AMENDMENT TO NEWARK AIRPORT PLAZA SUBLEASE AGREEMENT

THIS FIRST AMENDMENT TO NEWARK AIRPORT PLAZA SUBLEASE AGREEMENT (this "First Amendment") is made as of the 01 day of February, 2010 by and between GAZ Realty, Inc., a New York corporation (the "Landlord"), and 7-ELEVEN, INC., a Texas corporation (the "Tenant").

WITNESSETH THAT:

WHEREAS, Landlord and Tenant are parties to that certain Newark Airport Plaza Sublease Agreement executed by Landlord on June 5, 2009 and by Tenant on June 29, 2009 (the "Sublease"), covering those certain premises located at Lindbergh Rd. & Ramp, Newark, New Jersey 07114 (the "Premises"); and

WHEREAS, Landlord leases the entire premises described in Exhibit C of the Sublease from The Port Authority of New York & New Jersey (the "Master Landlord"), a body of corporate and politic established by Compact between the States of New York and New Jersey with the consent of the Congress of the United States of America, pursuant to a certain Lease Agreement dated July 31, 2008 (the "Master Lease"); and

WHEREAS, Landlord and Tenant acknowledge and agree that the Master Landlord will not provide a Recognition Agreement as contemplated in the Lease and that Landlord and Tenant desire to amend the Lease as provided herein.

NOW, THEREFORE, for and in consideration of the payment of Ten and 00/100 Dollars ($10.00) and other good and valuable consideration, the receipt and sufficiency of which are hereby acknowledged, the parties hereto agree as follows:

1. RECOGNITION AGREEMENT. The second (2nd) sentence of the fourth (4th) paragraph of Article 1 of the Lease is hereby deleted in its entirety. In addition, Exhibit G to the Lease is hereby deleted in its entirety.

2. USE. The Lease is hereby amended by deleting Article 5 therefrom in its entirety and substituting the following in its stead:

> "5. USE. The Premises and the Exclusive Use Area may be used up to and including twenty-four (24) hours per day for the sale, at retail of non-alcoholic beverages, snack foods, including ready to eat bakery foods and candy bars, microwavable hot foods (provided that nothing shall be cooked on premises other than microwavable items), cold foods, soups, newspapers, magazines, books, tobacco, tobacco products, toiletries, health and beauty aids, batteries and film, phone cards, soap, and such novelty items and other products as consented to in advance in writing by the Master Landlord."

3. ALTERATIONS. Article 9 of the Lease is hereby amended by deleting therefrom the word "exterior" in the second (2nd) and third (3rd) sentences of Article 9.

4. EXHIBIT E. The Lease is hereby amended by deleting Exhibit E in its entirety.

5. RATIFICATION OF LEASE. Except as modified by or where inconsistent with this First Amendment, the Lease is hereby ratified and confirmed. The rent and other amounts owed by Tenant pursuant to the terms of the Lease shall remain unchanged. Where inconsistent, the terms of this First Amendment shall supersede and take precedence over the Lease. Unless the context requires otherwise, all terms used herein shall be construed in conformity with the applicable provisions of the Lease.

[Remainder of page intentionally left blank.]

IN WITNESS WHEREOF, the parties have executed this First Amendment under seal as of the day and year first above written.

LANDLORD:

GAZ REALTY, INC., a New York corporation

By: _____
Name: George Abizeid
Title: President
hereunto duly authorized

_____
Name:

TENANT:

7-ELEVEN, INC., a Texas corporation

By: _____
Name: David Holland
Title: Attorney in Fact
hereunto duly authorized

Attest:
By: _____
Name: Robert C. Dreyant
Title: Asst Secretary

PROPERTY # 34296
Newark Airport
Lindbergh Rd. & Ramp
Newark, New Jersey 07114

NEWARK AIRPORT PLAZA SUBLEASE AGREEMENT

1. PARTIES. This Newark Airport Plaza Sublease Agreement is between is between GAZ Realty, Inc., a New York corporation ("Landlord") and 7-Eleven, Inc., a Texas corporation ("Tenant").

Landlord leases the entire premises described in Exhibit C (the "Newark Airport Plaza") from The Port Authority of New York & New Jersey (the "Master Landlord"), a body of corporate and politic established by Compact between the States of New York and New Jersey with the consent of the Congress of the United States of America, pursuant to a certain Lease Agreement dated July 31, 2008 (the "Master Lease"), a copy of which is attached hereto as Exhibit H.

Landlord represents and warrants to Tenant that (a) Landlord has delivered to Tenant full and complete copies of the Master Lease (including all exhibits thereto) and all amendments thereto and all other agreements between Master Landlord and Landlord governing the use and occupancy of the Newark Airport Plaza, including, without limitation, the Premises (as hereafter defined), (b) the Master Lease is, as of the date hereof, in full force and effect, (c) no event of default has occurred under the Master Lease and no event has occurred and is continuing which would constitute an event of default under the Master Lease but for the requirement of the giving of notice and/or the expiration of the period of time to cure, and (d) notwithstanding any option(s) to extend the term of the Master Lease, if any, the term of the Master Lease commenced on October 1, 2008 and shall expire on the twentieth (20th) anniversary of the Rental Payment Start Date (as defined in Section 4 of the Master Lease).

Landlord represents that it has full power and authority to enter into this Lease, subject to the Master Landlord's approval of the same. Notwithstanding the foregoing, Landlord shall use commercially reasonable efforts to provide Tenant within ten (10) days after the full execution of this Lease a Consent and Recognition Agreement (the "Recognition Agreement") from the Master Landlord in the form attached hereto as Exhibit G, in which the Master Landlord agrees to recognize this Lease, and the rights of Tenant hereunder, as a direct lease with Master Landlord in the event that the Master Lease shall terminate for any reason. So long as Tenant is not in default in the performance of its covenants and agreements in this Lease beyond applicable notice and cure periods, Tenant's quiet and peaceable enjoyment of the Premises shall not be disturbed or interfered with by Landlord, or by any person claiming by, through, or under Landlord.

Landlord further warrants and represents that neither the execution of this Lease nor the exercise by Tenant of its rights hereunder will cause a default under the Master Lease. Landlord shall pay, when due, all base rent, additional rent, percentage rent and other charges payable by Landlord to Master Landlord under the Master Lease. Landlord shall not enter into any amendment to the Master Lease that will affect any of Tenant's rights or obligations under this Lease without Tenant's prior written consent.

Landlord shall not do or permit to be done any act or thing which may constitute a breach or violation of any term, covenant or condition of the Master Lease. Landlord shall perform all covenants and obligations under the Master Lease that are not otherwise to be performed under this Lease by Tenant.

Landlord will not cause or permit a default under the Master Lease. For example, Landlord shall at all times keep in full force and effect all insurance required of Landlord as tenant under the Master Lease.

In the event of any default or failure of performance by Master Landlord as landlord under the Master Lease, Landlord agrees that it will, upon notice from Tenant, make demand upon Master Landlord to perform its obligations as landlord under the Master Lease and to take appropriate legal action to enforce the Master Lease.

2. PREMISES. Landlord grants and leases to Tenant and Tenant takes and leases from Landlord the premises containing approximately three thousand two hundred (3,200) square feet of ground floor premises and one thousand five hundred (1,500) square feet of premises on the second (2nd) floor of the Newark Airport Plaza (collectively, the "Premises") described in the attached Exhibit A and shown outlined in red on the site plan attached as Exhibit B (the "Site Plan"), both of which have been initialed by the parties and are a part of this Lease. The improvements shown on the Site Plan shall be constructed in accordance with the Construction Addendum, attached hereto and made a part hereof. The Premises are a portion of the Newark Airport Plaza described in Exhibit C and shown on the Site Plan. Landlord grants Tenant, together with its employees, suppliers, contractors, authorized representatives, invitees, permitted assigns and sublessees, (i) the exclusive use of those areas of the Newark Airport Plaza in addition to the Premises, including, but not limited to, Tenant's sign locations, marked as "Exclusive Use Area" on the Site Plan, and (ii) a non-exclusive easement for parking and for use of any means of ingress and egress in, to and from the Newark Airport Plaza now or hereafter existing, including, but not limited to, driveways, loading areas, curb cuts, sidewalks and parking areas, in common with Landlord and Landlord's other tenants (the "Common Area"). Landlord is hereby prohibited from designating any exclusive parking spaces in front of the Premises. Landlord further grants to Tenant and its employees, suppliers, contractors, authorized representatives, invitees, permitted assigns and sublessees, the non-exclusive right to use any means of ingress and egress to and from the Newark Airport Plaza, insofar as Landlord has the right to grant such use.

3. TERM. Unless sooner terminated or extended as herein provided, the term of this Lease shall be for ten (10) years (the "Term"), it being understood and agreed by the parties that the Master Lease may expire on a date prior to the expiration of the Second Extended Term (as such Second Extended Term is referenced in the table set forth in Article 4 below). Landlord agrees to use commercially reasonable, good faith efforts to enter into an agreement with the Master Landlord pursuant to which the term of the Master Lease is extended such that the term of the Master Lease expires on a date beyond the expiration of the Second Extended Term of this Lease. The Term shall commence on the first day of the first calendar month following the earlier of: (i) ninety (90) days after (a) all of the conditions and covenants of Articles 23, 27, 28, 31, 43, 48 and 49 have been fulfilled, or waived by Tenant, and (b) all of Landlord's Work (as hereinafter defined) has been completed; or (ii) the date Tenant opens for business (the earlier of (i) and (ii) being referred to herein as the "Marker Date"). Landlord and Tenant each agree that upon the other's written request, they will execute and deliver a letter acknowledging the actual commencement date of the Term and Tenant's obligation to commence payment of monthly rental and the expiration date of the Term (excluding any options to extend the Term referenced below).

Landlord grants to Tenant two (2) successive options to extend the Term upon the same terms, covenants and conditions of this Lease, except with respect to rent as set forth in Article 4 hereof, for any period of time up to but not exceeding five (5) years for each option (the "Extended Term"). If Tenant elects to exercise one or more options, Tenant shall notify Landlord at least one hundred eighty (180) days prior to the expiration of the Term or the Extended Term in effect at the time of the notice.

4. RENT. Tenant agrees to pay Landlord rent in the amounts set forth below, per month for each and every month during the Term and any Extended Term, in advance on or before the fifth (5th) day of each month unless abated or diminished as provided herein. Should the Marker Date occur on a day other than the first day of a calendar month, rent shall be apportioned for that month only. Rent may be paid, at Tenant's option, either: (i) by check and sent by ordinary first class mail to Landlord at the address set forth in Article

34 below; or (ii) by ACH transfer to an account designated from time to time by Landlord in writing to Tenant. Promptly upon receipt of written request from Tenant, Landlord shall designate an account for ACH transfer and provide Tenant with such other information and materials as reasonably requested by Tenant, including, without limitation, a voided check from the bank account belonging to Landlord which has been designated for such transfer and a completed "Funds Transfer Authorization Agreement", in form and substance acceptable to Tenant. Upon receipt of such information and materials, Tenant may pay rent by ACH electronic payment to Landlord's account specified in said Funds Transfer Authorization Agreement.

Lease Year[1]	Annual	Monthly
1-5 (Initial Term)	$132,000.00	$11,000.00
6-10 (Initial Term)	$151,800.00	$12,650.00
11-15 (First Extended Term)	$174,570.00	$14,547.50
16-20 (Second Extended Term)	$200,755.50	$16,729.62

4A. PERCENTAGE RENT. (a)(i) Subject to the terms and conditions in this subsection (a), Tenant agrees to pay to Landlord on a monthly basis, as additional rent, an amount of money equal to five percent (5%) of Gross Retail Sales (as hereafter defined) at the Premises in excess of Five Hundred Thousand and 00/100 Dollars ($500,000.00) for the applicable Lease Year (the "Percentage Rent"). Notwithstanding the foregoing, Tenant shall have no obligation to pay any Percentage Rent during a given Lease Year until after the Percentage Rent Trigger Date (as hereafter defined) has occurred. The "Percentage Rent Trigger Date" means the date on which Tenant has achieved an amount of total Gross Retail Sales at the Premises in excess of $500,000.00 for any given Lease Year. Tenant shall provide Landlord with written notice of the Percentage Rent Trigger Date no later than ten (10) days after Tenant determines the same.

(ii) Within ten (10) days following the last day of (x) the calendar month in which the Percentage Rent Trigger Date occurs and (y) each remaining calendar month thereafter of the applicable Lease Year, Tenant shall provide Landlord with written notice (each, a "Percentage Rent Notice") of the following: (i) the sum of Tenant's Gross Retail Sales during the applicable partial or full calendar month, and (ii) the amount (the "Percentage Rent Amount") of Percentage Rent to be paid by Tenant for such partial or full calendar month. Within thirty-five (35) days of Landlord's receipt of any such Percentage Rent Notice, Tenant shall pay to Landlord, as additional rent, the Percentage Rent Amount so stated in the applicable Percentage Rent Notice. "Gross Retail Sales" shall be defined as all retail sales or rentals less (i) refunds made to customers, (ii) sales, excise and gross receipt taxes, and (iii) proceeds from the sale or rental of items or provision of services for which Tenant receives only a fee or commission, including, without limitation, automatic teller machines, public telephones, money order sales, phone card sales and lottery sales.

(b) Subject to the terms and conditions in this subsection (a) of this Article 4A, Tenant agrees to pay to Landlord, as additional rent, an amount of money equal to five percent (5%) of Commission Sales (as hereafter defined) for the applicable Lease Year (the "Commission Rent"). Within ten (10) days following the last day of each calendar month during any given Lease Year, Tenant shall provide Landlord with written notice (each, a "Commission Sales Notice") of the following: (i) the sum of Tenant's Commissions Sales during the applicable calendar month, and (ii) the amount (the "Commission Rent Amount") of Commission Rent to be paid by Tenant for such calendar month. Within thirty-five (35) days of Landlord's receipt of the

[1] The term "Lease Year" as used herein shall mean a period of twelve (12) consecutive months beginning on the commencement of the Term as provided in Article 3, as to the first Lease Year, and any anniversary thereof as to subsequent Lease Years

Commission Sales Notice, Tenant shall pay to Landlord, as additional rent, the Commission Rent Amount so stated in the applicable Commission Sales Notice. "Commissions Sales" shall be defined as all commissions from (i) automatic teller machines, (ii) money order sales, (iv) phone card sales, and (v) lottery sales.

4B. CONSTANT AND VARIABLE RENT PAYMENTS. In addition to Tenant's obligations pursuant to Articles 4 and 4A above, and subject to the terms and conditions of this Article 4B, Tenant agrees to pay Landlord the following amounts, per month, for each and every month during the Term and any Extended Term, in advance on or before the fifth (5th) day of each month unless abated or diminished as provided herein: (i) a "constant" rent payment of $2,616.00 (the "Constant Rent"), and (ii) a "variable" rent payment of $4,387.00 (the "Variable Rent"). Tenant acknowledges and agrees that the Constant Rent and Variable Rent are subject to the same escalations and adjustments of the "constant factor" and the "variable factor" set forth in Section 4 of the Master Lease. Landlord shall notify Tenant in writing of any such escalations and adjustments to the Constant Rent and Variable Rent within ten (10) days of Landlord's being notified by Master Landlord of any escalations and adjustments of the "constant factor" and "variable factor" under the Master Lease.

5. USE. The Premises and the Exclusive Use Area may be used up to and including twenty-four (24) hours per day for the retail sale, rental or provision of merchandise and services customarily sold, rented or provided from time to time, at stores operated or franchised by Tenant or at supermarkets or grocery markets of any type and character operated within the supermarket or grocery industry as of the date of this Lease or in the future and including product lines, services and special features or departments included in such grocery markets or supermarkets, including but not limited to groceries, produce, meats, dairy, delicatessen, ready-to-eat, made to order and take-out food products for on or off-premise consumption, beer, wine and alcoholic beverages, financial and ticketing services (including automatic teller machines), amusement games, video rentals, greeting cards, automotive products, donuts and other types of pastry products, cigarettes, magazines, lottery, gasoline, pay telephones and related equipment, and sundries. The Premises may be used for any other lawful purpose which is not in direct conflict with any exclusive use provision contained in leases covering other businesses located in the Newark Airport Plaza, which other leases are dated prior to the later of the date of Tenant's or Landlord's execution of this Lease and which exclusive use provisions are attached hereto as Exhibit E.

6. UTILITIES. Tenant agrees to pay all charges for gas, electricity, telephone, sewer, water and any other utilities used by Tenant on the Premises. If possible, Landlord shall provide separate utility company meters at the Premises to monitor Tenant's use of all such utilities (excluding telephone and sewer). Tenant will be responsible for ensuring that all billing statements for all separately metered utilities will be mailed directly to Tenant for payment.

In the event it is not feasible for Landlord to provide separate utility company meters at the Premises to monitor Tenant's use of utilities, Landlord agrees to sub-meter the Premises such that Tenant's utility use is separately accounted for. Landlord agrees to forward to Tenant a monthly bill for all such utilities (excluding telephone and sewer) for the prior month as evidenced by the sub-meter. Landlord agrees that Tenant will not be liable for, and Landlord will forfeit all rights to recover utility payments from Tenant if presentation of the statement therefore is not made to Tenant within six (6) months after the end of the month to which the utility charges relate. In no event will Tenant be responsible for any penalty, interest or other cost except where resulting from Tenant's failure to pay a utility invoice submitted on a timely basis by Landlord as required by this paragraph.

7. TAXES. Tenant agrees to pay all taxes levied upon its personal property, including trade fixtures and inventory, located on the Premises. Tenant shall have no obligation to reimburse Landlord for any taxes and assessments levied against the Newark Airport Plaza, including, without limitation, the Premises, during the Term or Extended Term.

8. MAINTENANCE. At all times during the Term and the Extended Term, Landlord agrees (i) to maintain the roof, foundation and structural soundness of the Premises (except if caused by the negligence or willful misconduct of Tenant) and of the Newark Airport Plaza, and further, without limitation (ii) to keep in good repair the plumbing and electrical wiring up to and servicing the Premises (but excluding plumbing and electrical wiring located within the Premises and exclusively serving the same), the exterior of the Premises and of the Newark Airport Plaza. Tenant agrees that it shall be responsible, at it sole cost and expense, for any damage caused to the roof of the Newark Airport Plaza caused by the installation of Tenant's Fixtures (as hereafter defined), as well as the maintenance, repair, replacement or removal of such Fixtures. Tenant agrees to keep the interior of the Premises in good repair including electrical, plumbing, heating and air conditioning equipment exclusively serving the Premises and shall be responsible for all glass (casualty damage and reasonable wear and tear excepted). Landlord represents and warrants that upon delivery of the Premises to Tenant pursuant to Article 43 hereof, all systems serving the Premises including, without limitation, HVAC, electrical, plumbing and life safety systems, shall be in good working order and condition.

9. ALTERATIONS. Tenant shall not make any alterations involving structural, weight bearing changes without securing Landlord's written consent, which consent shall not be unreasonably withheld, conditioned or delayed. Tenant may make alterations or additions to the store front, signs, mansard or marquee and other non-weight bearing alterations to the Premises as Tenant may desire, including alterations to non-weight bearing partitions; provided, however, that any exterior alterations shall be subject to the review and approval of the Master Landlord in accordance with the terms of the Master Lease. Landlord agrees to use good faith, commercially reasonable efforts to obtain the Master Landlord's consent for any such exterior alterations proposed by Tenant. Such alterations or additions will be made in a good workmanlike manner without cost to Landlord, and shall be free and clear of mechanics' and materialmen's liens provided that if any such lien is filed, Tenant shall either promptly bond or discharge the same or it may contest the same in good faith.

Landlord shall have no right to make any changes to the exterior of the Premises, including changes to the exterior image or signage of the Premises, including, without limitation, Tenant's freestanding pole sign, without Tenant's prior written consent. The restriction in the preceding sentence shall not apply to those portions of the Newark Airport Plaza which are not (i) leased to Tenant pursuant to this Lease, or (ii) used for purposes of marketing or advertising Tenant's business, including, without limitation signage in and around Newark Airport Plaza.

10. TRADE AND OTHER FIXTURES. Subject to the approval of local governing authorities and the acquisition of any required permits, Tenant may install or cause to be installed at its expense such equipment and trade and other fixtures on, in or adjacent to the Premises, including its roof, and/or the Exclusive Use Area as are reasonably necessary for the operation of its business (the "Fixtures"). The Fixtures may include, without limitation, all heating, ventilation and air conditioning equipment (the "HVAC"), walk-in vault(s), public pay telephones, interior video rental machines, exterior lighting, a satellite dish and/or similar communications equipment and Tenant's typical exterior imaging, signs, banners and other advertising displays, including Tenant's fascia and pole signs.

The Fixtures may be installed prior to acceptance of the Premises. All Fixtures, whenever installed shall remain personal property, and title thereto shall continue in the owner thereof, regardless of the manner in which they may be attached or affixed. Tenant, at Tenant's expense, may at any time during the Term or Extended Term and shall at the expiration of the Term or Extended Term, remove any of the Fixtures (except the HVAC) and shall repair any damage caused by such removal.

Landlord hereby waives any landlord's lien which Landlord may have under applicable law with respect to Fixtures. In the event the Fixtures are subject to a lien or title retention instrument, the holder of any such lien or title retention instrument shall have the right and be able to enforce the same as stated therein and Landlord waives any rights to the contrary.

11. PERMITS/LICENSES. Subject to the specific limitations set forth in this Article 11, Landlord shall, as part of the Conditions Precedent (as hereafter defined in Article 23), apply for and obtain, at Landlord's sole cost and expense, all approvals, permits and/or licenses required by applicable governmental authorities or necessary or desirable, in Tenant's discretion, for Tenant to construct and operate the Premises as contemplated herein, including, without limitation, those approvals, permits and/or licenses listed in subsections (b) and (d) of Article 23 below. Any and all applications for approvals, permits and/or licenses filed by Landlord in connection herewith shall be subject to Tenant's prior review and approval. Furthermore, Landlord shall (i) provide Tenant with at least three (3) days prior written notice of any meetings and/or hearings with any governmental agency, body or entity regarding the aforementioned approvals, permits and/or licenses for the Premises, and (ii) promptly provide Tenant with copies of all applications, notices, requests, and other documents prepared by Landlord or received by Landlord in connection with the aforementioned approvals, permits and/or licenses. Landlord shall not conduct any meeting with any town official concerning the Premises without prior written notice to Tenant and Tenant's consent.

Subsequent to Landlord obtaining all of the aforementioned approvals, permits and/or licenses, Landlord hereby grants to Tenant the right to apply for and obtain, in Landlord's name or otherwise, any approvals, permits or licenses required by applicable governmental authorities or which are necessary or desirable for Tenant to undertake any construction and/or perform maintenance, remodeling, alterations and repairs of the Premises, or to otherwise use the Premises in accordance with the terms and conditions of this Lease, and Landlord agrees to execute any documents reasonably requested by Tenant in connection therewith.

12. CASUALTY DAMAGE AND CASUALTY INSURANCE. (a) If, in the opinion of Tenant, the Premises are rendered substantially unfit for the occupancy or use herein contemplated by any casualty insured against in a standard fire and extended coverage property insurance policy of the type then commonly purchased by owners of shopping centers in the area in which the Premises are situated (such a casualty being hereinafter referred to as an insurable casualty) and the then current Term shall have at least two years to run, Landlord, at Landlord's expense, shall promptly and diligently restore the Premises to the condition existing prior to the occurrence of the insurable casualty and all rental shall abate from the date of such occurrence until the Premises are so restored.

If, in the opinion of Tenant, the Premises are rendered substantially unfit for the occupancy or use herein contemplated by any casualty other than an insurable casualty or by any casualty whatever when the then current Term shall have less than two years to run, Landlord may either promptly and diligently restore the Premises at Landlord's expense as above provided, in which event all rental shall abate from the date of such occurrence until the Premises are so restored, or Landlord may terminate this Lease effective as of the date of the occurrence of the casualty; provided, that Landlord shall not have the right to so terminate this Lease if the casualty or peril is an insurable casualty and within twenty (20) days after the occurrence of the casualty, Tenant exercises, or agrees to exercise, any option to extend the Term for a period of at least two (2) years beyond the date of the casualty or if the casualty is other than an insurable casualty and Tenant within twenty (20) days after the occurrence of the casualty agrees in writing to restore the Premises at Tenant's expense. If, in the opinion of Tenant, the Premises are not rendered substantially unfit for the occupancy or use herein contemplated, Landlord shall promptly and diligently restore the Premises at Landlord's expense to the condition existing prior to the occurrence of the casualty and the rental shall not abate during such restoration period, provided the Landlord is prompt and diligent in connection with the restoration.

(b) Landlord agrees to maintain a standard fire and extended coverage property insurance policy on the Newark Airport Plaza of which the Premises are a part, including Tenant's improvements which comprise part of the building on the Premises (excluding any equipment). The policy shall be of the type commonly purchased by owners of commercial properties similar to the Newark Airport Plaza in the area in which the Premises are situated, and shall insure the Newark Airport Plaza to one hundred percent (100%) of the Newark Airport Plaza's replacement cost throughout the Term of this Lease and any Extended Term.

Each year during the current Term, Landlord shall furnish to Tenant a certificate of insurance naming Tenant as additional loss payee, as its interest may appear, evidencing that such insurance is in effect and a copy of the invoice reflecting that the premium has been paid. Such certificate shall state on its face that such insurance shall not be subject to cancellation except after twenty (20) days prior written notice to Tenant of such cancellation. Tenant shall reimburse Landlord for its Pro Rata Share of the premium, based on standard rates for Tenant's then current use of the Premises and not based on the premium rate due to any other occupant's use within the Newark Airport Plaza or any vacancies or empty space within the Newark Airport Plaza.

(c) Tenant agrees to maintain a standard fire and extended coverage property insurance policy on Tenant's personal property, improvements made by Tenant at Tenant's expense, fixtures and equipment provided that Tenant shall have the right to self-insure as to some or all of the risks covered by this Article 12(c).

13. WAIVER OF SUBROGATION. If either party to this Lease sustains loss or damage to the Premises or the Fixtures, goods, wares, merchandise or any other property located thereon, from which it is protected by an insurance policy, then, to the extent that such party is so protected, it waives any right of recovery from the other party. Each party agrees immediately to give to each insurance company which has issued to it a policy of fire and extended coverage property insurance written notice of the terms of such mutual waivers, and to cause any such insurance policy to be properly endorsed, if necessary, to prevent the invalidation of such insurance coverage by reason of such waivers.

14. LIABILITY INSURANCE. Tenant agrees, at Tenant's expense, to maintain in force continuously throughout the Term, and any Extended Term, commercial general public liability insurance covering the Premises with combined single limit coverage of $2,000,000 or its equivalent, and shall, upon Landlord's written request, furnish Landlord a certificate from the insurer evidencing such coverage and naming Landlord as additional insured under the policy but only as respects the Premises and only to the extent of liability resulting from occurrences arising out of the negligence of Tenant or its wholly owned subsidiaries, divisions, sublessees, assignee and employees. Notwithstanding the above, Tenant shall have the right to self-insure as to some or all of the risks covered by this Article. Landlord agrees, at Landlord's expense, to maintain in force continuously throughout the Term, and Extended Term, if applicable, commercial general public liability insurance covering the Newark Airport Plaza (including the Premises) with combined single limit coverage of $2,000,000 or its equivalent, and shall upon Tenant's written request, furnish Tenant a certificate from the insurer evidencing such coverage.

15. INDEMNITY. Subject to Article 13, during the Term, and any Extended Term, Tenant shall indemnify and hold Landlord harmless from any claim, liability, loss, cost or obligation owed to or asserted by any third party, arising from any damage or injury caused by the use of the Premises by Tenant, its agents, employees or contractors, excepting in each case any such damages, injuries, claims, liabilities, losses, costs or obligations as shall result from conditions existing on the Premises prior to the commencement of the Term, acts or omissions of Landlord or the failure of Landlord to perform its obligations under this Lease. Landlord agrees to indemnify and hold Tenant harmless from any liability, loss, cost or obligation arising from conditions existing on the Premises prior to the commencement of the Term, including, without limitation, the presence of Hazardous Materials (as defined in Article 23), acts or omissions of Landlord, its agents, employees or contractors or the failure of Landlord to perform its obligations under this Lease.

16. INTENTIONALLY OMITTED.

17. ASSIGNMENT OR SUBLEASE. Except as hereinafter provided, Tenant shall not assign this Lease or sublet the Premises without first obtaining the written consent of Landlord, which consent shall not be unreasonably withheld, conditioned or delayed, provided that any such assignee of Tenant assumes the obligations of Tenant under this Lease. Further, a demise by Tenant to its franchisees or licensees, or to any parent, subsidiary, or division, or a merger or consolidation of Tenant with another corporation, or to an affiliate

of Tenant, or to an independent entity in connection with financing or refinancing of the cost of construction of the improvements, shall not constitute an assignment or subletting for the purposes of the paragraph, and in any such event, Tenant shall remain primarily liable for the payment of rent and the performance of the terms, covenants and conditions of this Lease.

18. EMINENT DOMAIN. If pursuant to the exercise of the right of condemnation or eminent domain (i) the Premises or the Newark Airport Plaza are taken or conveyed under threat of the exercising of such right, or (ii) only a portion of the Premises or a portion of the Newark Airport Plaza is so taken or conveyed and Tenant determines that the remainder of the Premises or the Newark Airport Plaza (including Common Area and/or Exclusive Use Area) is inadequate or unsatisfactory for its purposes, which determination shall not be arbitrarily or capriciously made, or (iii) Tenant's access to the Premises or the Newark Airport Plaza or visibility of the Premises or Newark Airport Plaza is reduced by such taking or conveyance, or other reconstruction or alteration of the roadways abutting the Newark Airport Plaza, whether or not property is actually taken from the Newark Airport Plaza for such reconstruction or alteration, and Tenant determines that its access to the Premises or the Newark Airport Plaza (including Common Area and/or Exclusive Use Area) or visibility of the Premises or Newark Airport Plaza is inadequate or unsatisfactory for its purposes, which determination shall not be arbitrarily or capriciously made, Tenant shall have the right to terminate this Lease subject to Tenant's rights as set forth below. Such termination shall be effective on the date Tenant determines that its occupancy, use, or access (whichever is earlier) is inadequate or unsatisfactory for its purposes. The termination of this Lease as provided above shall not operate to deprive Tenant of the right, and Landlord expressly grants to Tenant the right, to make a claim for an award in condemnation, or participate in an award, for loss of business goodwill, relocation expenses, Tenant's leasehold interest and/or lease bonus value or leasehold advantage, loss or damage to Fixtures and improvements made by Tenant to the Premises or the Newark Airport Plaza, the value of Tenant's unexpired options to extend the Term, or any other claims that Tenant is permitted under applicable law to make or elects to make, or to receive notices and participate in the condemnation proceedings, including any settlement negotiations, whether conducted prior to or after the filing of a condemnation proceeding. Landlord further agrees to provide to Tenant information regarding any settlement offers made to or by Landlord, any appraisal reports made on behalf of Landlord in connection with the condemnation proceeding, and all other data relevant to calculating the compensation or damages to which Tenant may be entitled in such a condemnation proceeding.

If this Lease is not terminated as provided herein, Landlord and Tenant shall agree upon an equitable reduction in the rent. If the parties fail to agree upon such reduction within sixty (60) days from the date Tenant is required to give up such occupancy, use or access, whichever is earlier, Landlord and Tenant shall each choose one arbitrator and the two arbitrators so chosen shall choose a third arbitrator. The decision of any two of the arbitrators concerning the rent reduction, if any, shall be binding on Landlord and Tenant and any expense of the arbitration shall be divided equally between Landlord and Tenant. Any such reduction in rent shall not constitute an election of remedies by Tenant nor deprive Tenant of the right to make a claim for an award in condemnation as set forth above or receive notices and participate in the condemnation proceedings, including any settlement negotiations.

19. ATTORNEYS' FEES. If suit is brought to enforce any terms, covenants or conditions of this Lease, the parties agree that the losing party shall pay the prevailing party's reasonable attorneys' fees, including reasonable attorneys' fees incurred in enforcing a judgment, which shall be fixed by the court and court costs.

20. DEFAULT. If Tenant defaults in the payment of the monthly rent, Landlord shall promptly notify Tenant in writing. Should Tenant fail to cure such default within twenty (20) days after receipt of such notice, Landlord shall have the right to exercise one of the following options:

(a) Landlord may declare the forfeiture of this Lease by sending Tenant written notice thereof. Upon Tenant's receipt of such notice, this Lease shall expire and terminate as fully and completely and with the same effect as if that date were fixed for the expiration of the Term or the Extended Term and all rights

of Tenant, including occupancy of the Premises, shall expire and Tenant shall be relieved of all liability for any future rent or any other sums otherwise due from the date of such termination; or,

(b) Landlord may reenter and repossess the Premises, removing all persons therefrom without prejudice to any remedies for arrears of monthly rent or any other sums otherwise due, or breach of any other covenants hereunder. Within a reasonable period of time following such reentry and repossession, Landlord shall relet the Premises for the account of Tenant on such terms and conditions and for such uses as Landlord may reasonably determine in an effort to mitigate Landlord's damages as a result of Tenant's default hereunder. Landlord shall collect and receive any rent or any other sums otherwise due which may be payable by reason of such reletting. Tenant shall be liable for and pay to Landlord all monthly rent or any other sums otherwise due up to and including the date of such reentry and repossession; and, thereafter, Tenant shall, until the end of what would otherwise have been the then current Term, be liable to Landlord for and shall pay to Landlord, all monthly rent or any other sums otherwise due less the net proceeds of any reletting as set forth herein, after deducting from such proceeds all of Landlord's reasonable expenses incurred in conjunction with such reletting. Tenant shall pay such monthly rent or any other sums otherwise due on the days on which they would be payable hereunder in the absence of Tenant's default.

If Tenant defaults in the performance of any of the terms, covenants and conditions of this Lease other than the payment of monthly rent, Landlord shall promptly notify Tenant in writing. If Tenant fails to cure such default within thirty (30) days after receipt of such notice, or if the default is of such character as to require more than thirty (30) days to cure and Tenant fails to commence to cure within thirty (30) days after receipt of such notice and thereafter to proceed diligently to cure such default, then in either such event Landlord may cure the default and Tenant shall promptly reimburse Landlord for any expenses incurred by Landlord, but any such default shall not cause the forfeiture of this Lease or of Tenant's right of possession.

If Landlord defaults in the performance of any of the terms, covenants and conditions of this Lease, Tenant shall promptly notify Landlord in writing. If Landlord fails to cure such default within thirty (30) days after receipt of such notice, or if the default is of such character as to require more than thirty (30) days to cure and Landlord fails to commence to cure within thirty (30) days after receipt of such notice and thereafter diligently proceed to cure such default then, in either such event, Tenant, at its option, may, to the extent permitted by the law of the jurisdiction in which the Premises is located, (i) cure such default and setoff or deduct any expense so incurred from the rent or other amounts due, (ii) cancel and terminate this Lease and/or (iii) bring an action against Landlord, at law or in equity, arising out of such breach. Failure by Landlord to reimburse any overpayments by Tenant of rental or other charges, within twenty (20) days after receipt by Landlord of notice of such overpayment and documentation evidencing same, shall constitute a default by Landlord hereunder.

21. RIGHT OF FIRST REFUSAL. If Landlord receives a bona fide acceptable offer to purchase the Premises, the Newark Airport Plaza, or any portion of the Newark Airport Plaza which includes the Premises, Landlord grants Tenant an option to purchase the same upon the same terms and conditions; provided that the purchase price to Tenant shall be reduced by any real estate commissions or other expenses Landlord would have been obligated to pay pursuant to the bona fide acceptable offer but which Landlord shall not be obligated to pay upon a sale to Tenant. Immediately after the receipt of such offer, Landlord shall give Tenant written notice of the terms and conditions of the offer in the manner described in Article 34, enclosing a copy of the offer and enclosing copies of all information and documentation reasonably necessary to the consideration of such offer including, without limitation, copies of any other leases in effect at the Newark Airport Plaza, and Tenant may exercise the option to purchase at any time within thirty (30) days after receipt of such notice and additional documentation. Landlord shall promptly provide Tenant with any other information reasonably requested by Tenant within such thirty (30) day period and Tenant shall have an additional ten (10) day period after its receipt of such additional information to exercise such option. If Tenant elects to exercise such option it shall do so by giving written notice to Landlord within such period or periods and a purchase contract shall be executed by the parties and title conveyed within a reasonable

time thereafter. The failure of Tenant to exercise the option to purchase shall in no way release or relieve Landlord from Landlord's obligation to provide Tenant with notice of any future offers to purchase.

22. INTENTIONALLY OMITTED.

23. CONDITIONS PRECEDENT. Tenant and Landlord shall promptly proceed to satisfy each of the following conditions precedent ("Conditions Precedent"). Until such time as the following have been fulfilled, or waived in writing by Tenant, this Lease may be terminated by Tenant upon written notice to Landlord.

(a) Intentionally Omitted;

(b) all permits and approvals required for the installation of Tenant's fascia signs on the Premises and its freestanding pole sign at the locations on the Exclusive Use Area specified on the Site Plan having been obtained by and at the expense of Landlord;

(c) all permits, licenses and approvals, with conditions acceptable to Tenant, required for the sale or rental (as appropriate) of groceries, produce, meat, dairy, ready-to-eat food products for on or off-premise consumption (including, without limitation, delicatessen items or products prepared off-premises), auto parts, financial and ticketing services, and sundries, having been obtained by and at the expense of Tenant;

(d) all permits, licenses and approvals, with conditions acceptable to Tenant required for the construction and use of a twenty four (24) hour convenience store operation, having been obtained by and at the expense of Landlord, including, without limitation, all approvals required under any applicable zoning, environmental, wetlands, subdivision control, sanitary, health, safety and land use laws and regulations;

(e) samples, test borings, percolation, groundwater and other tests (including, but not limited to, testing for hydrocarbons, hazardous substances, toxic pollutants, asbestos, mold, lead paint and other contaminants, herein collectively "Hazardous Materials") being obtained by and at the expense of Tenant, as agent for Landlord, showing environmental conditions satisfactory to Tenant and the appropriate governmental authorities. Landlord shall report any condition revealed by such tests to the extent required by applicable law and Tenant shall have no responsibility or liability therefor;

(f) Landlord shall have provided Tenant with a Non-Disturbance Agreement executed by any mortgagee listed on Exhibit D and from any other then current mortgagees as of the time of satisfaction of the remaining Conditions Precedent;

(g) Tenant shall have received and approved the Binder in accordance with Article 49 hereof;

(h) there shall be no lease or occupancy agreement affecting the Premises, and the Premises shall be free of all tenants and occupants;

(e) Landlord having completed all of Landlord's Work;

(f) Intentionally Omitted; and

(i) Tenant having received and approved the Operational Documents (as hereafter defined), if any.

Each party shall fully cooperate with the other in conducting such tests and in seeking the permits, approvals and licenses referenced in this Article 23 (such permits, approvals and licenses being collectively, referred to herein as "Permits and Approvals" and individually "Permit" or "Approval"). Notwithstanding the foregoing provisions of this Article 23 or any other provisions of this Lease, if Tenant determines, in Tenant's reasonable judgment, at any time, that (i) there is no reasonable likelihood that any Condition Precedent will be satisfied, or (ii) development of the Premises and/or permitting for such development or Tenant's intended use shall be commercially and/or economically impractical, then Tenant shall have the right to terminate this Lease in accordance with the provisions of this Article 23.

24. CO-TENANCY. Landlord agrees that, without Tenant's prior written consent, no portion of the Newark Airport Plaza other than the Premises shall be occupied by a sit down restaurant, bar or other business selling food or alcoholic beverages for on premises consumption, a laundromat, a beauty shop, a barber shop, or a real estate office.

25. EXCLUSIVE. Landlord agrees that, during the Term and any Extended Term, no occupant of the Newark Airport Plaza other than Tenant shall operate a business which provides or offers, banking or other financial services (including automatic teller machines), or offers for sale or rental, in connection with all or any part of its business operations, any of the following items:

(a) packaged fluid milk in one quart or larger containers;
(b) commercially packaged bread products;
(c) delicatessen and delicatessen type items, including, but not limited to, packaged lunch meats, prepared sandwiches and foods, made to order sandwiches and foods, grill items (such as hot dogs), burritos, salads and condiments for consumption on or off premises;
(d) grocery items;
(e) cigarettes and tobacco products, unless vended by machine;
(f) intentionally omitted;
(g) health and beauty aids;
(h) soft drinks in six pack, eight pack, twelve pack, case lots, half, one or two liter bottles, or by the cup or can or frozen or semi-frozen carbonated beverages;
(i) candy, unless gift boxed or sold in bulk;
(j) coffee or hot chocolate by the cup;
(k) newspapers, magazines and paperback books; and
(l) lottery ticket, money orders, phone cards.

Landlord agrees to protect Tenant's and Tenant's franchisees at the Premises exclusive right to sell or rent the above listed items in any future sale or lease of all or any portion of the Newark Airport Plaza. Landlord shall not enter into any lease for occupancy of the Newark Airport Plaza that permits the sale or rental of the above listed items, and shall promptly, at its expense, take all appropriate legal action to stop any sales or rentals in violation of Tenant's exclusive rights. If any of the above covenants (including Article 24) are found by court of competent jurisdiction to be unreasonable or unenforceable, then such covenants shall be limited only to the extent that such court determines are reasonable and enforceable. Landlord hereby grants Tenant the right to institute an action, including an action for damages or injunctive relief, against any tenant of the Newark Airport Plaza which is operating in violation of the exclusives contained in this Article, provided however that Tenant does not, by virtue of obtaining such right, waive any rights it may have against Landlord as a result of any such violation.

26. SETBACK RESTRICTION. Landlord agrees that no building or other structure in the Newark Airport Plaza which faces the same street as the Premises shall be constructed closer to such street than the Premises so as to impede or alter ingress and egress and visibility, without Tenant's prior written consent. In addition, Landlord agrees that all signs in the Newark Airport Plaza will be constructed and located in such a manner which will not detract from the visibility of Tenant's fascia and pole signs.

27. LANDLORD'S COVENANTS. Landlord covenants that (i) it has a valid and enforceable leasehold interest in the Newark Airport Plaza and the Premises are free of all leases (except for the Master Lease), tenancies, agreements, encumbrances, liens, restrictions and defects in title affecting the rights granted Tenant in this Lease, (ii) there are no restrictive covenants, zoning or other ordinances or regulations applicable to the Premises which will prevent the Premises from being used as permitted in Article 5 above, and (iii) any underground storage tanks or facilities, not including those that may be installed by Tenant, or Hazardous Materials currently or previously located on or under the Premises or the Newark Airport Plaza have been or will be properly removed and disposed of and that any contamination on, in or under the Premises related thereto has been or will be assessed and remedied according to applicable laws, rules, regulations and ordinances to the satisfaction of the appropriate governmental authorities ("Landlord's Remedial Obligations"). To the best of Landlord's knowledge, information and belief, the Premises and the Newark Airport Plaza, including but not limited to, the soil and groundwater on or under the Premises and the Newark Airport Plaza are free from Hazardous Materials.

28. ENVIRONMENTAL OBLIGATIONS. If Landlord shall, at any time after the execution of this Lease, be required to perform Landlord's Remedial Obligations, Landlord and Tenant shall enter into an agreement satisfactory to Tenant containing the following terms and conditions and such other terms and conditions as the parties shall mutually agree (the "Agreement"). Landlord shall execute and deliver the Agreement to Tenant within three (3) days following Tenant's request therefor. Notwithstanding the provisions of Article 23 of this Lease or any other provisions of this Lease to the contrary, Landlord shall not be entitled to any notice of default or cure period in the event of Landlord's failure to timely execute the Agreement.

(a) Tenant shall provide Landlord reasonable access to the Premises for the purpose of conducting Landlord's Remedial Obligations; provided that Landlord's Remedial Obligations shall be conducted by Landlord in a manner designed to cause the least possible interference with any ongoing construction by Tenant and the operation of the store and its business;

(b) At least thirty (30) days prior to commencing any work in connection with Landlord's Remedial Obligations, Landlord shall deliver detailed plans and specifications for such work for review and approval by Tenant;

(c) Landlord shall undertake Landlord's Remedial Obligations, including, without limitation, any and all investigations, remediation and disposal of contaminated soil and/or groundwater (including any revealed as part of the Tenant's construction) at Landlord's sole cost and expense and in accordance with all applicable federal, state and local laws, rules, regulations and ordinances;

(d) Landlord shall properly repair and/or restore any damage to the Premises as a result of Landlord's Remedial Obligations;

(e) Indemnity by Landlord in connection with (i) Landlord's Remedial Obligations, and (ii) Hazardous Materials (as defined in Article 23 hereof);

(f) Landlord and its agents and contractors shall maintain insurance coverage(s) reasonably acceptable to Tenant; and

(g) All reports and studies issued in connection with the performance of Landlord's Remedial Obligations shall be addressed to, and may be relied upon by, both Landlord and Tenant.

If the Landlord's Remedial Obligations are identified prior to the scheduled date for commencement of the Term, and Tenant has not terminated this Lease pursuant to Article 23, then, prior

to, and as a condition of, the commencement of the Term, the parties shall execute and deliver the Agreement.

If Landlord shall fail to perform or pay for its obligations in accordance with this section or under the Agreement (collectively, the "Obligations"), Tenant may, at its option, perform or pay for the Obligations, in either event as Landlord's agent. If Tenant shall so elect, Tenant may withhold rent to the extent of expense incurred by Tenant in performing or paying for the Obligations. Tenant may also withhold rent to the extent of any damages incurred by Tenant. Tenant shall not be deemed thereby to be in breach of this Lease, and such right of withholding rent shall not be deemed the exclusive remedy of, nor an election of remedies by, Tenant. Without limiting any of Landlord's obligations under this Lease, the parties acknowledge that Landlord shall not be required to undertake Landlord's Remedial Obligations and/or Landlord's Obligations until the date that the Conditions Precedent have been fulfilled, or waived in writing by Tenant. In the event that Landlord fails to complete Landlord's Remedial Obligations and/or Landlord's Obligations, including, without limitation, removal of Residue (as hereafter defined), within forty-five (45) days after the date that the Conditions Precedent have been fulfilled, or waived in writing by Tenant (the "Expected Completion Date"), Tenant shall have the option to (a) terminate this Lease upon written notice to Landlord or (b) receive one (1) day of free rent for each day after the Expected Completion Date that Landlord has failed to so complete Landlord's Remedial Obligations and/or Landlord's Obligations.

29. COMMON AREA. At all times during the Term and any Extended Term, Landlord shall be responsible for maintaining, cleaning, ice and snow removal, and lighting the Common Area and maintenance and repair where warranted of all landscaping, parking and driveway areas of the Newark Airport Plaza (including the Exclusive Use Area but excluding the motor fuels pump island, the motor fuels facility canopy and the concrete pad located above the underground storage tanks) which shall not exceed the reasonable and customary expense for such services in the area in which the Premises are located. Tenant shall bear its Pro Rata Share (as hereafter defined) of the reasonable costs and expenses incurred by Landlord in connection with (i) ice and snow removal, and (ii) garbage removal for the Newark Airport Plaza (collectively, the "Limited Common Expenses". Landlord shall invoice Tenant for Tenant's share of such Limited Common Expenses on a monthly or calendar quarter basis, at Landlord's option. Such invoice shall show in reasonable detail the Limited Common Expenses and shall include Landlord's representation that the Limited Common Expenses referred to therein have been paid by Landlord and shall be forwarded to Tenant's office at the address provided in Article 34 below, to the attention of Tenant's Corporate Accounting. Tenant shall have no obligation for any Common Area costs other than the Limited Common Expenses.

If requested by Tenant, Landlord shall provide Tenant with such information or data as may be reasonably requested to verify the amount of the Limited Common Expenses, or, if requested by Tenant, Landlord shall permit Tenant to audit Landlord's books and records maintained by Landlord in connection with the Limited Common Expenses. Tenant shall give Landlord reasonable notice of its intention to conduct such an audit which shall be conducted at Landlord's offices. The cost of such audit shall be borne by Tenant; provided, however, that in the event the audit reveals that the actual Limited Common Expenses are more than ten (10%) less than the Limited Common Expenses reflected in the statement(s) presented by Landlord which are the subject of the audit, Tenant's reasonable cost of conducting the audit shall be borne by Landlord.

If Landlord fails to invoice Tenant for Limited Common Expenses within six (6) months of the incurrence of the Limited Common Expenses to which such invoice relates, then Landlord's right to reimbursement of same shall be forever forfeited and waived.

Landlord shall cause the parking area and all signs and pylon signs or monument signs located at the Newark Airport Plaza to be lighted from dusk until dawn, 7 days per week, 52 weeks per year. Upon written request by Tenant, Landlord shall award a contract for cleaning and maintaining the Common Area to the lowest of three (3) bidders, one of whom may be Tenant.

30. QUIET ENJOYMENT. Upon paying the rent and performing the terms, covenants and conditions of this Lease, Tenant shall quietly have, hold and enjoy exclusive possession of the Premises and all rights granted Tenant by this Lease.

31. SUBORDINATION. Tenant agrees that its leasehold interest hereunder is subordinate to any lien of mortgages now on, or hereafter to be placed on, the Premises; provided, as a condition precedent to such subordination, Landlord agrees to take whatever action is necessary (including obtaining written documentation from its mortgagee) to assure that each such mortgagee shall expressly covenant ,or each such mortgage shall expressly provide ,that so long as Tenant is not in default under this Lease, Tenant's quiet possession of the Premises shall remain undisturbed, on the terms, covenants and conditions stated herein, whether or not the mortgage is in default and notwithstanding any foreclosure or other action brought by the mortgagee. Landlord represents and warrants that there are no mortgages or similar encumbrances affecting the Premises except as shown on Exhibit D. Provided that Landlord complies with the requirements of this Article, Tenant agrees to comply with reasonable requests for execution of documentation to affect this subordination of its leasehold interest. Tenant shall have the right to mortgage or pledge as collateral the leasehold interest created by this Lease. Notwithstanding the foregoing, Landlord shall deliver, prior to the commencement of the Term, a non-disturbance agreement in form and substance satisfactory to Tenant (a "Non-Disturbance Agreement") executed by any mortgagee holding a mortgage or similar encumbrance affecting the Premises as of the commencement of the Term which has not previously executed a Non-Disturbance Agreement as provided in Article 23.

32. BANKRUPTCY. Should Tenant make an assignment for the benefit of its creditors, or seek an order for relief under the United States Bankruptcy Code, Landlord, at its option, may terminate all rights of Tenant under this Lease, if permitted by applicable law.

33. CHANGE OF OWNERSHIP. Subject to Tenant's rights under Article 21 above, Landlord shall provide Tenant written notice in the event (i) the Master Landlord conveys title to the Newark Airport Plaza, (ii) the Master Landlord assigns its interest in the Master Lease, or (iii) Landlord assigns Landlord's interest in this Lease or the Master Lease to another party. Such notice shall include such party's tax identification number and shall be accompanied by documents (including a W-9 Form or similar tax documents) which evidence the transfer of title or assignment of interest and the effective date thereof. After receipt of such notice, rent and other payments due and future notices to Landlord shall be given to the party designated therein and Tenant shall attorn to the new owner as substitute Landlord. Should Landlord fail to provide the required notice or documentation, or should Tenant be reasonably uncertain concerning the proper party to whom rent is due, Tenant may withhold rent thereafter accruing until Tenant is furnished the required notice, documentation and/or satisfactory proof as to the party entitled thereto. Tenant shall, within thirty(30) days of receipt of request, execute for Landlord an estoppel certificate concerning the terms of this Lease in a form reasonably acceptable to Tenant.

34. NOTICES. Except as otherwise provided in Articles 7 and 29, any notices required or permitted hereunder shall be in writing and delivered either in person to the other party or by United States Certified Mail, Return Receipt Requested, postage fully prepaid, to the addresses set forth below or to such other address as either party may designate in writing and deliver as provided in this Article.

LANDLORD: GAZ Realty, Inc.
366 North Broadway, Suite 206
Jericho, New York 11753

Tax Identification No.

TENANT: 7-ELEVEN, INC.
Attn: Corporate Real Estate
P. O. Box 711
Dallas, Texas 75221-0711

with a copy to:
7-Eleven, Inc.
Northeast Division
Attn: Real Estate Department
1075 Cranbury South River Road
Suite 4
Jamesburg NJ 08831

35. RECORDATION. This Lease shall not be filed for public record. However, as a condition to commencement of the Term of this Lease, Landlord and Tenant shall execute and acknowledge a memorandum or short form lease (which will include, without limitation, a description of any exclusive use provisions contained in this Lease and a sufficient legal description of the Newark Airport Plaza and Tenant's rights under Article 11) which may be filed for record by Tenant at any time after the execution of this Lease, setting forth the parties, description of the Premises, Term, Extended Term, right of first refusal and purchase options and any other provisions mutually agreed upon. Landlord agrees that it shall execute and deliver such other documentation as may be required in order to record the memorandum or short form lease.

36. BROKER. Landlord and Tenant covenant, warrant and represent that to their knowledge there are no brokers involved in the negotiation or consummation of this Lease. Landlord and Tenant agree to hold the other harmless against any claim by another broker for a commission from any act by it.

37. FORCE MAJEURE. Neither party shall be required to perform any term, covenant or condition of this Lease so long as such performance is delayed or prevented by force majeure, which shall mean any acts of God, strike, lockout, material or labor restriction by any governmental authority, civil riot, and any other cause not reasonably within the control of such party and which by the exercise of due diligence such party is unable, wholly or in part, to prevent or overcome.

38. HOLDOVER. Should Tenant remain in possession of the Premises after the expiration of the Term or any Extended Term, Tenant shall be deemed to be occupying the Premises as a month-to-month tenant, at a monthly rental equal to the rent payable during the last month of the Term or the Extended Term.

39. APPLICABLE LAW. The laws of the state in which the Premises are located shall govern the validity, performance and enforcement of this Lease. The invalidity or unenforceability of any provision of this Lease shall not affect or impair any other provision.

40. COMPLETE AGREEMENT. This Lease merges all prior negotiations and understandings between the parties and constitutes their complete agreement which is binding upon Landlord and the heirs, executors, administrators, successors and assigns of Landlord when executed by Landlord, and is binding upon Tenant, its successors and assigns, only if executed by a Vice President or Attorney-in-Fact of Tenant, regardless of any written or verbal representation of any agent, manager or other employee of Tenant to the contrary. This Lease may only be amended by written agreement signed by Landlord and Tenant.

41. DUE AUTHORITY. Landlord and Tenant each warrant and represent, upon which warranty and representation the other party has relied in the execution of this Lease, that each party has full right and lawful authority to execute this Lease in the manner and upon the conditions and provisions herein contained, and that no consent to the execution of this Lease is required.

42. DELIVERY OF REPORTS AND STUDIES. Simultaneously with the execution of this Lease by Landlord, Landlord shall deliver to Tenant any and all existing environmental and/or remediation reports and geotechnical studies with respect to the Premises.

43. DELIVERY OF PREMISES. Tenant's obligations under this Lease shall be conditioned upon Landlord's delivery of the Premises (i) in compliance with applicable laws and regulations, (ii) broom clean

and free of all tenants and occupants, in the condition required hereunder, including, without limitation, with all Residue (as hereafter defined) having been removed in accordance with Article 44 hereof, and (iii) all of Landlord's Work having been completed by Landlord to Tenant's satisfaction, including, without limitation, Landlord completing all tasks necessary for the issuance of a permanent certificate of occupancy for the Premises. Landlord shall deliver the Premises to Tenant in accordance with the terms of this Lease on or before September 15, 2009 (the "Expected Delivery Date"). In no event shall the Term commence until Landlord shall have so delivered the Premises.

In the event that Landlord has not delivered the Premises to Tenant on or before the Expected Delivery Date, and in accordance with the terms of this Lease, including without limitation, (i) broom clean and free of all tenants and occupants, and (ii) with all of the work listed in the Construction Addendum and all of Landlord's Work having been completed by Landlord to Tenant's sole satisfaction, then, in either such event, Tenant shall have the option to (a) terminate this Lease upon written notice to Landlord or (b) receive two (2) days of free rent for each day after the Expected Delivery Date that Landlord has failed to so deliver the Premises. If any portion of such free rent shall not be credited by Landlord to Tenant within fifteen (15) days after demand therefor, then Tenant may (notwithstanding any provision of the Lease to the contrary) offset such unpaid amount against the installment or installments of rent or additional rent due or next becoming due until such amount is fully recovered by Tenant. Without limiting any of the foregoing, in the event that Tenant terminates the Lease (x) due to Landlord's failure to deliver the Premises to Tenant in the condition required hereunder on or before the Expected Delivery Date, or (y) in the event Tenant is unable to obtain the permits or approvals identified in subsection (c) of Article 23 as a result of Landlord's actions or inaction, or (z) if Landlord is unable to obtain a permanent certificate of occupancy for the Newark Airport Plaza, including, without limitation, the Premises, in form and substance acceptable to Tenant allowing Tenant to construct and operate the Premises as contemplated herein, then in any such event, Landlord shall, within ten (10) days of receipt of Tenant's termination notice, reimburse Tenant for all out-of-pocket, hard and soft costs incurred in connection with this Lease and the Premises. The foregoing remedies are in addition to and not in limitation of any other remedies available to Tenant under this Lease or under applicable law.

44. LANDLORD'S REMOVAL OBLIGATIONS. Landlord shall, at its sole cost and expense, remove and dispose of all equipment, structures, septic systems, materials, debris and residue relating to any prior use of the Premises, including, by way of example and not of limitation, in the case of a motor fuels facility, lifts, above and below ground storage tanks, dispenser islands, piping, traps, lines, canopies and the like, unless otherwise agreed (collectively, "Residue").

45. LANDLORD'S REMEDIAL OBLIGATIONS. The parties acknowledge that Tenant will construct a convenience store at the Premises. In connection with such construction, Tenant may excavate, extract or remove soil, groundwater and debris, excluding Residue (collectively, "Substances"), as agent of the Landlord. The parties agree that any such Substances shall be the property of Landlord. Landlord further agrees that Tenant may prepare and sign such manifests, in Landlord's name, as necessary under local, state and federal law for the proper disposal of the Substances. Without limiting the generality of Article 27 hereof, Landlord's Remedial Obligations shall include the obligation to test the Substances for the presence of Hazardous Materials. In the event that the cost of excavation, extraction, transport, disposition or removal of Substances to an appropriate offsite disposal facility exceeds Fifteen and 00/100 Dollars ($15.00) per ton (the "Base Charge Per Ton"), Landlord shall pay or reimburse Tenant for the cost in excess of the Base Charge Per Ton. The Landlord's obligations under this Article shall constitute Obligations under Article 28 hereof. Except as set forth herein, the provisions of Article 28 shall not be affected by this Article.

Without limiting any of Landlord's obligations under this Lease, the parties acknowledge that Landlord shall not be required to (i) undertake Landlord's Remedial Obligations and/or Landlord's Obligations, including, without limitation, removal of underground storage tanks, and (ii) undertake Landlord's Work until the date that the Conditions Precedent have been fulfilled, or waived in writing by Tenant. In the event that Landlord fails to complete Landlord's Remedial Obligations and/or Landlord's

Obligations, including, without limitation, removal of Residue, on or before the Expected Completion Date (as defined in Article 28 hereof), Tenant shall have the option to (a) terminate this Lease upon written notice to Landlord or (b) receive one (1) day of free rent for each day after the Expected Completion Date that Landlord has failed to so complete Landlord's Remedial Obligations and/or Landlord's Obligations.

46. DRAFTING. Landlord and Tenant agree that this Lease has been drafted and negotiated by both parties, and neither party shall be deemed to be the draftsperson for purposes of construing provisions of this Lease.

47. TENANT'S CONSTRUCTION. Any improvements or repairs to the Premises including, but not limited to, improvements or repairs to foundation, footings, load bearing walls or utilities provided to the building or improvements located thereon discovered to be necessary during Tenant's construction, or as a result of Tenant's obtaining Permits and Approvals, shall be completed by Landlord at Landlord's expense (unless caused by Tenant's negligence).

48. ASBESTOS AND LEAD-BASED PAINT. Without limiting the generality of Article 23 hereof, Landlord agrees to remove no later than one hundred (100) days from the date this Lease is executed by Tenant any and all asbestos-containing materials ("ACM") as defined by the U.S. Environmental Protection Agency ("EPA") and/or presumed asbestos-containing materials ("PACM") as defined by the Occupational Safety and Health Administration ("OSHA"), mold and/or lead-based paint which may be present in or at the Premises on the date of this Lease, or which may be present elsewhere in the Newark Airport Plaza but which may cause exposure of persons in the Premises to ACM, PACM, mold and/or lead-based paint, unless the presence of such ACM, PACM, mold and/or lead-based paint in the Premises is the result of Tenant's negligence or willful misconduct. All such removal, transportation and disposal of ACM, PACM, mold and/or lead-based paint shall be in accordance with all federal, state and local laws, rules, regulations and ordinances and at Landlord's sole cost and expense. Any such removal activity shall be coordinated with Tenant and Landlord shall use commercially reasonable efforts to minimize the interruption to Tenant's operations or construction. Landlord and Tenant agree to reasonably cooperate with each other in connection with such removal activity. Landlord agrees to indemnify, defend and hold Tenant harmless from and against any and all claims, demands, damages, actions, orders, expenses or any other liability including attorney fees and costs, and from any resulting judgment, settlements, fines, or penalties for: (i) personal injuries arising from exposure to ACM, PACM, mold and/or lead-based paint in or at the Premises on the date of this Lease, (ii) property damage arising from ACM, PACM, mold and/or lead-based paint released from the Premises prior to the date of this Lease, and (iii) cost of cleanup or containment of ACM, PACM, mold and/or lead-based paint in or at the Premises on the date of this Lease. Landlord's failure to comply with the provisions of this Article 48 shall be subject to the terms and conditions of Article 20, respecting Landlord's default under this Lease.

49. LEASEHOLD TITLE POLICY. Tenant may, at Tenant's expense, obtain through a title company acceptable to Tenant ("Title Company") preliminary title documentation for extended coverage leasehold title insurance acceptable to Title Company for such title insurance. A preliminary title report or binder (the "Binder") shall be issued giving the current condition of title to the Premises, together with copies of all instruments necessary to fully explain the scope and effect of any matters listed as exceptions in the Binder whereby Title Company is bound to issue to Tenant or its nominee, for an amount to be determined by Tenant, an A.L.T.A. Title Insurance Policy - Standard Form 2006, or such other form as shall be acceptable to Tenant, (herein the "Title Policy"). In the event the Binder reflects any matters or conditions which Tenant reasonably determines will interfere with its intended development or use of the Premises, or the rights granted Tenant in this Lease, Tenant may terminate this Lease. Landlord agrees that it shall execute, record and deliver such documents as Title Company may require in order to establish Landlord's title to the Premises. Without limiting any of the foregoing, within five (5) days after the full execution of this Lease by Landlord and Tenant, Landlord agrees to provide Tenant with a copy of any operational documents which affect or encumber the Premises, such as, but not limited to, Operational Easement Agreement(s), Reciprocal Easement Agreements or Covenants, Conditions and Restrictions (collectively, the "Operational Documents").

50. SIGNAGE. (a) Landlord agrees that Tenant, subject to any required local governmental approvals, may install and maintain, at its sole expense, its standard fascia signs on the Newark Airport Plaza as shown on Exhibit F or at such other location mutually acceptable to Landlord and Tenant. All of Tenant's signs may display Tenant's federally registered service marks. Tenant shall obtain, at its expense, any necessary permits prior to the installation of such signs.

(b) Throughout the first twelve (12) months of the Term of this Lease, Tenant may display promotional banners and awnings in and around the Newark Airport Plaza and Premises and adjacent portions of the parking lot of the Newark Airport Plaza for its grand opening.

(c) Without limiting any of Tenant's rights to erect and maintain signage under this Lease, Tenant shall have the right, without any additional charge, to install (i) signage on the common signage facilities of the Newark Airport Plaza (the "Existing Center Signage"), and (ii) exterior lighting along the façade of the Premises, as permitted by applicable law. Tenant shall be entitled to the top position on any multi-tenant Existing Center Signage.

51. LANDLORD'S WORK. In addition to the provisions of Article 43 hereof, Landlord shall, at its sole cost and expense, perform the following work prior to delivery of the Premises to Tenant (the "Landlord's Work"): (a) all work listed in the Construction Addendum attached hereto, (b) all other work necessary to deliver the Premises in accordance with the terms of this Lease, and (c) all other work necessary to complete construction of the Newark Airport Plaza in accordance with the plans and specifications approved by Tenant. Without limiting the foregoing, Landlord's Work shall include the obtaining of a permanent certificate of occupancy for the Premises.

52. MOTOR FUELS FACILITY. (a) Without limiting any of Landlord's other obligations with respect to this Lease and the Master Lease, as a condition to Tenant's obligations hereunder, including, without limitation, the obligation to pay rent, Landlord shall cause that certain premises (the "Motor Fuels Premises") located within the Newark Airport Plaza and identified on the Site Plan as the "Motor Fuels Facility", to be operated as a first class motor fuels facility (the "Motor Fuels Facility"), which Motor Fuels Facility shall be operated 24 hours a day, 7 days a week, 52 weeks a year.

(b) In the event that the Motor Fuels Premises ceases to be operated as a Motor Fuels Facility 24 hours a day, 7 days a week, 52 weeks a year, in accordance with the terms and conditions of this Lease, for a continuous period of time equal to or greater than seven (7) days, Tenant shall be obligated to pay to Landlord only fifty percent (50%) of the monthly rent, Percentage Rent, Constant Rent, and Variable Rent, then due and payable during any period of time during which the Motor Fuels Premises ceases to be operated as a Motor Fuels Facility in accordance with the terms and conditions of this Lease. In the event that the Motor Fuels Premises ceases to be operated as a Motor Fuels Facility 24 hours a day, 7 days a week, 52 weeks a year, in accordance with the terms and conditions of this Lease, for a continuous period of time equal to or greater than six (6) months, Tenant shall have the option to (i) terminate the Lease upon notice to Landlord, or (ii) pay to Landlord only fifty percent (50%) of the monthly rent, Percentage Rent, Constant Rent, and Variable Rent, then due and payable, until such time as operation of the Motor Fuels Facility as required under this Lease resumes at the Motor Fuels Premises. Without limiting any of the foregoing, Tenant may also withhold rent to the extent of any damages incurred by Tenant in connection with Landlord's failure to cause the Motor Fuels Premises to be operated as a Motor Fuels Facility in accordance with the terms and conditions hereof. Tenant shall not be deemed thereby to be in breach of this Lease, and such right of withholding rent shall not be deemed the exclusive remedy of, nor an election of remedies by, Tenant.

53. TERMINATION OF MASTER LEASE. (a) In the event that the Master Landlord terminates the Master Lease due to a default by Landlord thereunder, and as a result of such termination, this Lease shall be terminated, then Landlord shall pay to Tenant within thirty (30) days following the date of the termination of this Lease a "Termination Payment" equal to the sum of (i) the unamortized "Tenant's Lease Costs" as of

effective date of such termination of the Master Lease, plus (ii) the unamortized amount of the "Franchise Fee" as of effective date of such termination of the Master Lease, each amortized on a straight line basis over a period of twenty (20) years. "Tenant's Lease Costs" shall be the sum of all hard and soft costs incurred by Tenant in connection with the Lease and the Premises and other Improvements thereon for the operation of its business, including, without limitation: (i) attorneys', architects' and engineers' fees, (ii) the costs of all plans, specifications and site studies, (iii) the cost of all alterations, additions and improvements made by Tenant and (iv) the cost of all Fixtures installed at the Premises. The "Franchise Fee" shall be the amount payable by Tenant's franchisee or licensee to Tenant in order to acquire a 7-Eleven franchise.

(b) In the event that the Master Landlord terminates the Master Lease **pursuant to Section 57 thereof** (and not as a result of default by Landlord under the Master Lease), and as a result this Lease shall be terminated, then Landlord reimburse Tenant within thirty (30) days following the date of the termination of this Lease for the depreciated amount of all hard and soft costs (collectively, the "Store Costs") incurred by Tenant in connection with the Lease and the Premises and other Improvements thereon for the operation of its business, including, without limitation: (i) attorneys', architects' and engineers' fees, (ii) the costs of all plans, specifications and site studies, (iii) the cost of all alterations, additions and improvements made by Tenant and (iv) the cost of all Fixtures installed at the Premises. For the purposes of this Article 53(b), such Store Costs shall be deemed to be $500,000.00 and shall be depreciated over the initial Term of this Lease on a straight line basis.

54. PARKING. Landlord grants Tenant, its employees, agents, customers, patrons, guests and invitees the non-exclusive right to park motor vehicles in all of the parking spaces located at the Newark Airport Plaza. Landlord shall maintain adequate signage throughout the parking areas of the Newark Airport Plaza stating that all parking spaces are for "15 Minute Parking Only". Landlord, at Landlord's sole cost and expense, shall enforce the aforesaid "15 Minute Parking Only" restriction for all parking spaces in the Newark Airport Plaza. Without limiting any of the foregoing, Landlord shall have at least one (1) employee at the Newark Airport Plaza at all times, in order to enforce such parking restriction 24 hours per day, 7 days per week, 52 weeks per year.

55. COOKING. Tenant covenants and agrees that it will not permit any open flame cooking in or about the Premises, provided, however, Landlord agrees that the following uses will be allowed in the Premises notwithstanding the foregoing prohibition: (i) a roller grill (for the purposes of heating hot dogs, sausages and the like); (ii) microwave heating; (iii) a Turbo Chef Convection Oven, (iv) coffee (and other liquid) brewing and heating; and (v) the sale of pre-packaged foods to be heated in the manner described in either clause (i), (ii) or (iii) hereof.

[Signatures appear on the following page.]

EXECUTED BY TENANT this 29th day of June, 2009.

7-ELEVEN, INC.

Attest:

By: _____
Assistant Secretary
Marijan Smith

By: _____
~~Vice President or~~
Attorney-in-Fact
DAVID HOLLAND
(Seal)

EXECUTED BY LANDLORD this 05th day of JUNE, 2009.

LANDLORD

GAZ REALTY, INC., a New York corporation

Attest: Alan Abizeid

By: _____
Its: VP

By: _____
Name: George Abi Zeid
Its: President
(Seal)

(x)	Exhibit A: Premises Description	(x)	Exhibit F: Tenant's Signage
(x)	Exhibit B: Site Plan	(x)	Exhibit G: Recognition Agreement
(x)	Exhibit C: Newark Airport Plaza Description	(x)	Exhibit H: Master Lease
(x)	Exhibit D: Mortgages	(x)	Construction Addendum
(x)	Exhibit E: Exclusive Use Provisions	(x)	Schedule I to Construction Addendum

Exhibit A

Premises Description

The Premises contains approximately three thousand two hundred (3,200) square feet of ground floor premises and one thousand five hundred (1,500) square feet of premises on the second (2nd) floor, shown outlined in red on the site plan attached as Exhibit B hereto, in the Newark Airport Plaza located at Newark Airport, Lindbergh Road & Ramp, Newark, New Jersey 07114, and further described on Exhibit C attached hereto.

Exhibit B

Site Plan

[*See attached*]

Exhibit E

Exclusive Use Provisions

NONE

Exhibit F

Tenant's Signage

[*See attached.*]

Exhibit G

Recognition Agreement

CONSENT AND RECOGNITION AGREEMENT

THIS AGREEMENT is entered into this _____ day of _____, 2009, by and between The Port Authority of New York & New Jersey, a body of corporate and politic established by Compact between the States of New York and New Jersey with the consent of the Congress of the United States of America (the "**Master Landlord**"), and 7-Eleven, Inc., a Texas corporation ("**Subtenant**").

WHEREAS, the Master Landlord, as lessor, entered into a certain Lease Agreement (the "**Master Lease**") dated as of July 31, 2008 with GAZ Realty, Inc., a New York corporation ("**Sublandlord**"), as lessee, with respect to certain property located at Newark Airport, Lindbergh Road and Ramp, Newark, New Jersey, as more fully described in Exhibit A of the Master Lease (the "**Master Leased Premises**"); and

WHEREAS, Subtenant is entering into a Newark Airport Plaza Sublease Agreement dated _____, 2009 (the "**Sublease**") with respect to certain premises as described in the Sublease (the "**Subleased Premises**"), which Subleased Premises are a portion of the Master Leased Premises, and Subtenant has requested the Master Landlord's consent to the Sublease and the Master Landlord's agreement to recognize the Sublease as a direct lease with the Master Landlord in the event of the termination of the Master Lease and Sublandlord's leasehold interest in the Subleased Premises.

NOW, THEREFORE, in consideration of the foregoing and the mutual covenants hereinafter contained, and for other good and valuable consideration, the receipt and sufficiency of which are hereby acknowledged, the parties hereto agree as follows:

1. The Master Landlord hereby consents to the Sublease and to each and every provision thereof (the "**Consent**"). Without limiting the generality of the foregoing, the Consent is deemed to include the Master Landlord's consent and agreement to the following:

a. Subtenant's use and operation of the Subleased Premises as permitted by the Sublease;

b. Subtenant's use of the following is permitted at the Subleased Premises: (i) a roller grill (for the purposes of heating hot dogs, sausages and the like); (ii) microwave heating; (iii) a Turbo Chef Convection Oven, (iv) coffee (and other liquid) brewing and heating; and (v) the sale of pre-packaged foods to be heated in the manner described in either clause (i), (ii) or (iii) hereof.

c. The Master Landlord agrees that the sale of mainstream publications typically sold at bookstores and newsstands (e.g. Maxim, Cosmopolitan and Playboy) is not prohibited by the provisions of the Master Lease.

d. Construction by Tenant of its improvements and the performance of any maintenance and repair obligations pursuant to the Sublease;

e. The performance by Subtenant of any alterations (including, without limitation, any alterations to the storefront, mansard, or marquee) to the Subleased Premises permitted under the terms of the Sublease either without

Sublandlord's consent or upon obtaining any consent by Sublandlord required under the Sublease;

f. Subtenant's signage at the Subleased Premises and any additional or replacement signage permitted under the terms of the Sublease either without Sublandlord's consent or upon obtaining any consent by Sublandlord required under the Sublease;

g. The Master Landlord agrees that application of insurance proceeds and condemnation awards to restore the Subleased Premised shall be governed by the Sublease; and

h. The Master Landlord approves the provisions of the Sublease relating to assignment, subletting, franchising, licensing and the like.

2. The Master Landlord and Subtenant agree that, in the event of any termination or expiration of the interests, leasehold estate, rights or any part thereof of Sublandlord as tenant under the Master Lease, whether such termination, surrender or transfer be voluntary, involuntary, by operation of law, or otherwise, the Master Landlord shall recognize Subtenant's rights under the Sublease, the Sublease shall remain in full force and effect as a lease directly between the Master Landlord and Subtenant, and all obligations of Subtenant under the Sublease shall continue in full force and effect and be enforceable against Subtenant by the Master Landlord, and the obligations of Sublandlord under the Sublease shall continue in full force and effect and be enforceable against the Master Landlord by Subtenant, all with the same force and effect as if the Sublease had originally been made and entered into directly by and between the Master Landlord and Subtenant. Subtenant does hereby covenant with the Master Landlord that, in any such event Subtenant shall recognize and attorn to the Master Landlord as its landlord upon the covenants and conditions contained in the Sublease. Neither the Sublease nor this agreement shall be construed to be a covenant by Subtenant to undertake the obligations of, or liability for acts or omissions of Sublandlord under the Master Lease.

3. The Master Landlord hereby certifies to Subtenant as follows:

a. The Master Lease contains the complete agreement between the Master Landlord and Sublandlord and has not been amended, supplemented or modified, except as described above.

b. As of the date hereof, (i) the Master Lease is in full force and effect, (ii) to the best of the Master Landlord's knowledge, there are no defaults or events that with the passage of time or notice would constitute a default by the Master Landlord or Sublandlord under the Master Lease, and (iii) to the best of the Master Landlord's knowledge, Sublandlord is in full compliance with all of the terms, conditions and covenants of the Master Lease.

c. The expiration date of the Master Lease is [_____, _____] **[NOTE TO MASTER LANDLORD: PLEASE PROVIDE]**.

d. There are no mortgages affecting the Master Leased Premises, including, without limitation, the Subleased Premises.

4. Subtenant agrees to subordinate its leasehold interest under the Sublease to the lien of any mortgage hereafter to be placed on the Master Leased Premises, provided that, as a condition precedent to such subordination, each such mortgagee shall expressly covenant, or each such mortgage shall expressly provide, that so long as Subtenant is not in default under the Sublease beyond any applicable notice and cure periods, Subtenant's quiet possession of the Subleased Premises shall remain undisturbed, on the terms, covenants and conditions stated in the Sublease,

whether or not the mortgage is in default and notwithstanding any foreclosure or other action brought by the mortgagee. Without limiting the generality of the foregoing, the Master Landlord agrees to deliver to Subtenant, simultaneously with the granting of any mortgage or similar encumbrance affecting the Subleased Premises, a non-disturbance agreement ("Non-Disturbance Agreement") in form and substance satisfactory to Subtenant executed by the holder of such mortgagee or similar encumbrance.

5. The Master Landlord hereby agrees that the Master Leased Premises shall be subject to the exclusive rights of Subtenant to the extent applicable to such premises pursuant to the terms of the Sublease.

6. All notices, requests, demands and other communications under this Agreement shall be in writing, and shall be deemed to have been duly given (i) on the date of service if served personally on the party to whom notice is to be given, (ii) on the day after delivery to Federal Express or a similar overnight courier or the Express Mail Service maintained by the U.S. Postal Service, or (iii) on the fifth (5th) day after mailing, if mailed to the party to whom notice is to be given, by first class mail, registered or certified, postage prepaid and properly addressed, to the party as follows:

If to the Master Landlord:

GAZ Realty INC.
361 N. Broadway #201
Jericho, NY 11753

with a copy to:

_____
_____
_____

If to Subtenant:

7-Eleven, Inc.
ATTN: Corporate Real Estate
P.O. Box 711
Dallas, TX 75221-0711

with a copy to:

7-Eleven, Inc.
Northeast Division
1075 Cranbury South River Road
Suite 4
Jamesburg, NJ 08831
ATTN: Real Estate Manager

7. Intentionally Omitted.

8. Before exercising any remedies by reason of the default by Sublandlord under the Sublease, Subtenant shall provide the Master Landlord with a copy of the notice of default by Sublandlord giving rise to same and, thereafter, the Master Landlord shall have the same period of time as is available to Sublandlord to cure such breach or default. Subtenant agrees not to pay any rent more than one month in advance, except as required under the terms of the Sublease.

9. The Master Landlord hereby agrees to execute any documents reasonably requested by Subtenant in order to apply for and obtain any permits or licenses required by applicable governmental authorities necessary or desirable for Subtenant to perform maintenance, remodeling, alterations and repairs of the Subleased Premises, or to otherwise use the Subleased Premises in accordance with the terms and conditions of the Sublease.

10. All capitalized terms not otherwise defined herein shall have the same meanings ascribed to them in the Sublease.

11. This Agreement shall be binding upon and inure to the benefit of the parties hereto and their respective successors and assigns.

IN WITNESS WHEREOF, the Master Landlord and Subtenant have executed this Agreement under seal as of the date first above written.

WITNESS:	THE PORT AUTHORITY OF NEW YORK AND NEW JERSEY, a body of corporate and politic established by Compact between the States of New York and New Jersey with the consent of the Congress of the United States of America:
	_____
	By: _____
	Name: _____
	SUBTENANT:
	7-ELEVEN, INC., a Texas corporation
	By: _____
	Name: _____

Exhibit H

Master Lease

[*See attached.*]

Signed copy

Lease No. ANB-862

LEASE AGREEMENT

between

THE PORT AUTHORITY OF NEW YORK & NEW JERSEY

and

GAZ REALTY, INC.

Dated as of July 31, 2008

TABLE OF CONTENTS

Section 1.	Letting	1
Section 2.	Term	2
Section 3.	Rights of User	2
Section 4.	Rental	3
Section 5.	Condition of the Premises	10
Section 6.	Construction by the Lessee	10
Section 7.	Ingress and Egress	23
Section 8.	Compliance with Governmental Requirements	23
Section 9.	Rules and Regulations	24
Section 10.	Various Obligations of the Lessee	25
Section 11.	Prohibited Acts	27
Section 12.	Care, Maintenance, Rebuilding and Repair by the Lessee	30
Section 13.	Insurance	31
Section 14.	Damage to or Destruction of Premises	33
Section 15.	Indemnity and Liability Insurance	33
Section 16.	Signs	36
Section 17.	Obstruction Lights	37
Section 18.	Additional Rent and Charges	37
Section 19.	Rights of Entry Reserved	38
Section 20.	Condemnation	39
Section 21.	Assignment and Sublease	42
Section 22.	Termination	42
Section 23.	Right of Re-entry	44
Section 24.	Waiver of Redemption	44
Section 25.	Survival of the Obligations of the Lessee	45
Section 26.	Reletting by the Port Authority	46
Section 27.	Remedies to be Non-Exclusive	47
Section 28.	Surrender	47
Section 29.	Acceptance of Surrender of Lease	47
Section 30.	Effect of Basic Lease	47
Section 31.	Removal of Property	48
Section 32.	Brokerage	48
Section 33.	Limitation of Rights and Privileges Granted	48
Section 34.	Notices	49
Section 35.	Other Construction by the Lessee	49
Section 36.	Place of Payments	50
Section 37.	Additional Construction Work	50
Section 38.	Construction and Application of Terms	50
Section 39.	Non-liability of Individuals	51
Section 40.	Non-Discrimination	51

PJ
7-7-72

Section 41.	Affirmative Action	52
Section 42.	The Lessee's Additional Ongoing Affirmative Action - Equal Opportunity Commitment	52
Section 43.	Quiet Enjoyment	54
Section 44.	Infringement	55
Section 45.	Late Charges	55
Section 46.	Obligations In Connection with the Percentage/Variable Rental	56
Section 47.	Towing and Emergency Services to be performed by the Lessee	57
Section 48.	Sales and Services by the Lessee	63
Section 49.	Postponement	65
Section 50.	Services	65
Section 51.	Utility Lines	65
Section 52.	Relationship of the Parties	66
Section 53.	Definitions	66
Section 54.	Storage Tanks	69
Section 55.	Federal Airport Aid	71
Section 56.	Lessee's Rights Non-Exclusive	72
Section 57.	One Hundred Twenty Day Termination	72
Section 58.	Force Majeure	74
Section 59.	Environmental Compliance	75
Section 60.	Security Deposit	75
Section 61.	Books and Records	77
Section 62.	Other Agreements	78
Section 63.	Operating Names	78
Section 64.	Space Licenses	78
Section 65.	Certain Environmental Testing and Clean-up Obligations	80
Section 66.	Official Inspection Station	86
Section 67.	Phase 1A Roadway Work	86
Section 68.	Entire Agreement	91

Exhibits A, B, M and Z
Schedules A, E, F and X

THIS AGREEMENT SHALL NOT BE BINDING UPON THE PORT AUTHORITY UNTIL DULY EXECUTED BY AN EXECUTIVE OFFICER THEREOF AND DELIVERED TO THE LESSEE BY AN AUTHORIZED REPRESENTATIVE OP THE PORT AUTHORITY

Port Authority Lease No. ANB-862

AGREEMENT OF LEASE

THIS AGREEMENT OF LEASE, made effective as of the 31st day of July, 2008 by and between **THE PORT AUTHORITY OF NEW YORK AND NEW JERSEY** (hereinafter called "the Port Authority"), a body corporate and politic established by Compact between the States of New York and New Jersey with the consent of the Congress of the United States of America and having an office at 225 Park Avenue South, in the Borough of Manhattan, in the City, County and State of New York 10003, and **GAZ REALTY, INC. d/b/a NEWARK AIRPORT PLAZA INC.** (hereinafter called "the Lessee"), a corporation of the State of New York having an office and place of business at 366 North Broadway, Suite 206, Jericho, New York 11753, whose representative is George Abi Zeid,

WITNESSETH, That:

The Port Authority and the Lessee, for and in consideration of the covenants and mutual agreements hereinafter contained, hereby covenant and agree as follows:

Section 1. Letting

(a) The Port Authority hereby lets to the Lessee and the Lessee hereby hires and takes from the Port Authority at Newark Liberty International Airport (sometimes hereinafter referred to as "the Airport") in the City of Newark, County of Essex and State of New Jersey the ground space as shown in stipple on the drawing attached hereto, hereby made a part hereof and marked "Exhibit A", together with the fixtures, improvements and other property of the Port Authority located or to be located thereon, the said lands, fixtures, improvements and other property of the Port Authority (hereinafter collectively referred to as "the premises"). The parties acknowledge that the premises constitute non-residential real property.

(b) Except to the extent required for the performance of any of the obligations of the Lessee hereunder, nothing contained in this Agreement shall grant to the Lessee any rights whatsoever in the air space above the heights of the structures thereon.

Section 2. Term

The term of the letting under this Agreement shall commence on October 1, 2008 (the "Commencement Date") and shall, unless sooner terminated, expire on the day preceding the twentieth (20th) anniversary of the Rental Payment Start Date as defined in Section 4 of the Lease (the "Expiration Date").

Section 3. Rights of User

The Lessee shall use the premises for the purpose of constructing and operating a multi-fuel vehicle service station, including the operation of a first class convenience store and for no other purpose whatsoever and in connection therewith shall provide thereat the following sales and services and no other sales and services whatsoever:

(i) The sale and delivery of gasoline for trucks and automobiles;

(ii) The sale and delivery of diesel fuel for trucks and automobiles;

(iii) The sale and delivery of an environmentally friendly alternative fuel (compressed natural gas, biodiesel, ethanol, hydrogen) for trucks and automobiles;

(iv) The sale and delivery of motor oil;

(v) A dual bay car wash (one automated; one full service) for the cleaning of automobiles, light pick-up trucks and small vans;

(vi) The sale and delivery of automotive supplies, tires, parts and accessories;

(vii) The repair (electrical and mechanical only), maintenance and servicing of automobiles, light pick-up trucks and small vans only. It is hereby specifically understood and agreed that the foregoing shall not be provided to any other items of automotive equipment including but not limited to trailers and aircraft ground support vehicles.

(viii) Parking for disabled and towed vehicles (to accommodate at least 20 vehicles) and parking for no more than three (3) 55-foot trucks;

(ix) Public restrooms;

(x) Space for public telephones (the Lessee will not provide the telephone service);

(xi) An air pump for inflating tires;

(xii) The non-exclusive right to maintain at all times during the term of the letting an adequate towing service as defined and set forth in Section 47 of this Agreement.

(xiii) The sale, at retail of non-alcoholic beverages, snack foods, hot and cold sandwiches, soups, newspapers, tobacco, tobacco products, toiletries and such other products as shall be consented by the Port Authority in advance;

(xiv) The Lessee shall be permitted to operate one (1) automated teller machine.

(xv) The Lessee shall be permitted to sell lottery tickets issued by the New Jersey State Department of Tax and Finance.

Except as specifically provided in Section 47 of this Agreement, the parking, storage or garaging of automobiles, light pick-up trucks, large trucks, tractor trailers, aircraft ground support vehicles or any other vehicles at the premises is hereby expressly prohibited.

Section 4. Rental

A. Rental Obligation

(1) The Constant Factor of the Annual Ground Rental

(a) The Lessee agrees to pay to the Port Authority for the period from the Rental Payment Start Date, as hereinafter defined, and continuing through the balance of the term of the letting hereunder, both dates inclusive, a Ground Rental for the premises at the annual rate of Two Hundred Ten Thousand One Hundred Eight Dollars and No Cents ($210,108.00). The aforesaid annual Ground Rental is made up of two factors, one a constant factor in the amount of Seventy Eight Thousand Four Hundred Eight Four Dollars and No Cents ($78,484.00) and the other a variable factor in the amount of One Hundred Thirty One Thousand Six Hundred Twenty Four Dollars and No Cents ($131, 624.00). The constant factor is subject to escalation and adjustment as provided in subparagraph (b) of this Section 4. The variable factor aforesaid represents the Airport Services portion of the rental, is hereinafter referred to as "the Airport Services Factor" and is subject to adjustment as provided in subparagraph (c) below. The Lessee shall pay the said annual Ground Rental, in advance, in equal monthly installments of Six Thousand Five Hundred Forty Dollars and Thirty Three Cents ($6, 540.33) on the Rental Payment Start Date and on the first day of each and every month thereafter occurring during such period, provided, however, that, if the Rental Payment Start Date occurs on a day which is other than the first day of a month, the Ground Rental for the portion of the month during which the Rental Payment Start Date occurs following such date shall be the amount of the monthly installment prorated on a daily basis using the actual number of days in the said month.

(b) CPI Adjustments:

The following terms as used in this Section 4 shall have the respective meanings given below:

(1) "CPI" or "Consumer Price Index" shall mean the Consumer Price Index for all Urban Consumers, New York-Northern New Jersey, Long Island, NY- NJ-CT, (All Items unadjusted 1982-84=100) published by the Bureau of Labor Statistics of the United States Department of Labor.

(2) The Port Authority shall ascertain the CPI for the month in which the Rental Payment Start Date occurs and for the month in which the first year anniversary of the Rental Payment Start Date occurs and for the same calendar month in each year thereafter during the term of this Agreement after the same has been published, and the Port Authority shall also determine the annual percentage increase, if any, for each such twelve month period after the same has been published (hereinafter called "the annual CPI percentage increase").

(3) Effective on the first day of the month in which the first year anniversary of the Rental Payment Start Date occurs, and on the first day of every anniversary of the Rental Payment Start Date thereafter occurring during the term of the letting, the constant factor of the annual Ground Rental set forth above in paragraph (1)(a) of this subdivision I of this Section 4 (as the same may have been previously adjusted hereunder) shall be increased as follows: (i) the constant factor of the annual Ground Rental as set forth in said paragraph (1)(a) shall be multiplied by a percentage composed of 1/2 of the annual CPI percentage increase, if any, for the latest twelve month period using the same calendar month in accordance with subparagraph (2) above plus 100%; and (ii) the constant factor of the annual Ground Rental rate as set forth in said paragraph (1)(a) shall be multiplied by 104%; and the greater of the two products so obtained by the calculations set forth in the foregoing clauses (i) and (ii) shall be and become the constant factor of the annual Ground Rental in effect for the annual period commencing on the said first day of the month in which the first anniversary of the Rental Payment Start Date (or, on the first day of the applicable Rental Payment Start Date occurring thereafter during the term of the letting hereunder) occurs and ending on the last day of the immediately succeeding twelfth month.

(4) In the event that the Consumer Price Index for the calendar month to be used in determining such increase of the constant factor of the Ground Rental is not available as of the effective date of said increase, the Lessee shall continue to pay the constant factor of the Ground Rental at the rate then in effect subject to retroactive adjustment and a lump sum payment of any deficiency so determined at such time as the Index for said calendar month becomes available. In the event of the change of basis or the discontinuance of the publication by the United States Department of Labor of the Consumer Price Index such other appropriate index or indexes shall be substituted as may be agreed by the parties hereto as properly reflecting changes in the value of the current United States money in a manner similar to that established in the said indexes used in the latest adjustment. In the event of the failure of the parties to so agree, the Port Authority may select and use such index or indexes as it deems appropriate, provided, however, that the foregoing shall not preclude the Lessee from contesting the Port Authority's selection.

(5) In no event shall any annual rate of any constant factor of the rental established under this paragraph (b) be less than the annual rate of the constant factor of the rental it supersedes.

2. The Airport Services Factor of the Annual Ground Rental

(a) The Lessee shall pay to the Port Authority on account of the Airport Services Factor of the annual Ground Rental the amount of One Hundred Thirty One Thousand Six Hundred Twenty Four Dollars and No Cents ($131, 624.00), payable in equal monthly installments Ten Thousand Nine Hundred Sixty Eight Dollars and Sixty Seven Cents *($10, 968.67) on the Rental Payment Start Date and on the first day of each and every month* thereafter occurring during the term of the lease, as adjusted pursuant to the provisions of Schedule A, attached hereto and hereby made a part hereof. After the close of calendar year and thereafter for each and every calendar year through the term of the letting, the Airport Services Factor shall be adjusted, upwards or downwards, in accordance with the provisions of Schedule A attached hereto and hereby made a part hereof. The constant factor of the Ground Rental shall adjust in accordance with paragraph (1)(b) of this Section (4).

(b) The Lessee understands and agrees that while the term of the Lease shall expire in 2028, the final Airport Services Factor for 2028 may not be determined for some months after the expiration and that the Lessee's obligations to pay any deficiency in the rental for the year 2027 and the applicable portion of 2028 or the Port Authority's obligation to pay a refund in said rental resulting from the determination of the final Airport Services Factor for the years 2027 and 2028 shall survive such expiration of the Lessee and shall remain in full force and effect until such deficiency or refund, if any, is paid. The Lessee hereby specifically acknowledges that neither the survival of the obligation with respect to any such deficiency or refund nor any other provision of this Agreement shall grant or shall be deemed to grant any rights whatsoever to the Lessee to have the term of the Lease extended for any period beyond the Expiration Date

(c) If the letting hereunder shall terminate on a day other than the last day of a calendar month, the installment of Ground Rental payable on the first day of the calendar month in which the effective date of termination shall occur shall be an amount equal to the amount of the applicable installment described in this Section multiplied by a fraction the numerator of which shall be the number of days from the first day of the calendar month in which the effective date of termination shall occur to the effective date of termination, both dates inclusive, and the denominator of which shall be the full number of days in that calendar month. If the monthly installment due on the first day of that month has not been paid the Lessee shall pay the prorated part of the amount of that installment; if the monthly installment has been paid, then the excess thereof shall be credited to the Lessee's obligations.

3. Percentage Rental

(a) The Lessee agrees to pay to the Port Authority an annual percentage rental equivalent to the sum of:

(i) Five percent (5 %) of all the gross receipts, as hereinafter defined, of the Lessee arising during each annual period, as hereinafter defined, which are in excess of Annual Exemption Amount-A, as hereinafter defined, from the sale of items shown in Section 3, except those set forth in Section 3 (i), (ii), (iii) and (xv); and

(ii) Three cents ($0.03) per gallon of gasoline sold by the Lessee during each annual period, which are in excess of Annual Exemption Amount –B, as hereinafter defined; and

(iii) Three cents ($0.03) per gallon of diesel fuel sold by the Lessee during each annual period, which are in excess of Annual Exemption Amount-C, as hereinafter defined; and

(iv) Three cents ($0.03) per gallon of compressed natural gas, biodiesel, ethanol and hydrogen sold by the Lessee during each annual period, which are in excess of Annual Exemption Amount-C; and

(v) Five percent (5%) of each transaction fee charged to the customer in connection with the use of the automated teller machined described in Section 3 (xiv) during each annual period, which are in excess of Annual Exemption Amount-A.

(b) The computation of the annual percentage rental for each annual period or a portion of an annual period as hereinafter provided shall be individual to such annual period or such portion of an annual period and without relation to any other annual period or portion of an annual period. For the purpose of calculating the percentage rental for any annual period that contains more or less than 365 days, the annual exemption amounts shall be prorated over the actual number of days contained in such annual period.

(c) The time for making payment of the basic and percentage rentals and the method of calculation thereof shall be as set forth in paragraph B of this Section.

4. As used herein:

(a) "Gross receipts" as used in this Agreement shall include all monies paid or payable to the Lessee for all sales and/or deliveries made or rendered at or from the premises and for all services (including but not limited to the Patron service, as defined in Section 47 of this Agreement) rendered at or from the Airport regardless of when or where the order therefor is received at the Airport, and any other revenues of any type arising out of or in connection with the Lessee's operations at the Airport, provided, however, that any taxes imposed by law which are separately stated to and paid by a customer and directly payable to the taxing authority by the Lessee shall be excluded therefrom, and provided, furthermore, that gross receipts shall not include (i) monies paid or payable by the Port Authority to the Lessee for the Emergency Service provided by the Lessee pursuant to Section 47 of this Agreement or (ii) sales made at or from the premises in connection with the sale of lottery tickets.

(b) "Rental Payment Start Date" shall mean the earlier of:

(i) The three hundredth (300) day following the Commencement Date, as defined in Section 2 of this Agreement, or

(ii) such earlier date following the completion by the Lessee of the improvement, finishing and installation work described in Section 6 hereof as may be designated by the Port Authority to the Lessee as the date on which public operations may be commenced in the premises.

The Lessee recognizes that the occurrence of the Commencement Date shall not be deemed to authorize the Lessee to commence any work in the premises unless the Port Authority's final approval of the Alteration Application and plans and specifications referred to in Section 6 hereof have been obtained by the Lessee. The Lessee further recognizes that its obligation to pay basic rental shall commence on the Rental Payment Start Date established pursuant to subparagraph (b) of this Section whether or not the Lessee is conducting public operations in the premises on such date.

(d) "Annual Period" shall mean, as the context requires, the twelve-month period commencing with the Rental Payment Start Date established pursuant to the provisions of this Agreement and each of the twelve-month periods thereafter occurring during the term of the letting, provided, however, that if the Rental Payment Start Date commences on other than the first day of a calendar month, the first annual period shall include the portion of the month which the Rental Payment Start Date falls following such date plus the succeeding 12 calendar months and each subsequent annual period shall commence on the anniversaries of the first day of the first full calendar month following the month in which the Rental Payment Start Date occurs.

(e) "Annual Exemption Amount –A shall mean the amount equivalent to Five Hundred Thousand Dollars and No Cents ($500,000.00); Annual Exemption Amount-B shall mean the amount equivalent to Three Million (3,000,000) gallons; Annual Exemption Amount –C shall mean an amount equivalent to One Million five Hundred Thousand (1,500,000) gallons.

B. Time of Payment and Computation of Amounts

(1) The Lessee shall pay the ground rental in advance, in equal monthly installments equal to 1/12 of the ground rental provided for in paragraph (1) of Subdivision A above commencing on the Rental Payment Start Date and on the first day of each and every month thereafter during the balance of the letting hereunder.

(2) The Lessee shall pay the percentage rental as follows: on the 20th day of the first month following the Rental Payment Start Date and on the 20th day of each and every month thereafter the Lessee shall render to the Port Authority a sworn statement showing (i) all of its gross receipts for the preceding month arising out of all its operations in the premises and separately showing the gross receipts for subdivisions (i) through (xv) in Section 3. At such time, the Lessee shall pay an amount to the Port Authority equivalent to the sum of the percentage amounts multiplied by the gross receipts arising in each of the aforesaid categories in accordance with the provisions set forth in Section 4A(3)(a). In addition to the foregoing, on the 20th day of the first month following each anniversary of the Rental Payment Start Date , the Lessee shall submit to the Port Authority a statement setting forth the cumulative amount of gross receipts arising during the preceding twelve (12) month period certified, at the Lessee's

sole cost and expense, by a certified public accountant, of all gross receipts arising during the period from the last preceding anniversary of the Rental Payment Start Date up to and including the last day this Agreement shall be in effect and the Lessee shall, at the time of rendering such statement to the Port Authority, pay the percentage rental due and unpaid as of the last day this Agreement shall be in effect.

(3) Upon any termination of the letting hereunder (even if stated to have the same effect as expiration), the Lessee shall, within twenty (20) days after the effective date of such termination, make a payment of rental computed as follows: first, if the letting hereunder is terminated effective on a date other than the last day of a calendar month, the basic rental for the portion of that month in which the letting remains effective shall be the amount of the monthly installment of basic rental prorated on a daily basis using the actual number of days in the month, and, if the monthly installment due on the first day of that month has not been paid, the Lessee shall pay the prorated part of the amount of that installment; if the monthly installment has been paid, then the excess thereof shall be credited to the Lessee's other obligations; second, the Lessee shall within twenty (20) days after the effective date of termination, render to the Port Authority a sworn statement separately showing all its gross receipts for the annual period in which the effective date of termination happens to fall; and third, the payment then due on account of the percentage rental for the annual period in which the effective date of termination falls shall be the excess over the prorated Annual Exemption Amount – A, stated in Section 4(A)(4)(e) above applied to all items shown in Section 3 (except those set forth in subdivisions (i), (ii), (iii) and (xv) of Section 3; and excess over the prorated Annual Exemption Amount-B, stated in Section 4(A)(4)(e) above applied to all the gallons of gasoline sold by the Lessee during such annual period; and the excess over the prorated Annual Exemption Amount –C applied to each gallon of diesel fuel, compressed natural gas, biodiesel, ethanol and hydrogen sold by the Lessee during such annual period, said annual exemption amounts shall be prorated as hereinabove provided, less any percentage rental payments previously made for such annual period..

(4) Nothing contained in this Section shall affect the survival of the obligations of the Lessee as set forth in Section 25 of this Agreement.

C. Abatement

(a)(i) During the period commencing on the Rental Payment Start Date and continuing through the day preceding the first (1st) anniversary of such date, both dates inclusive, in the event the Lessee shall at any time by the provisions of this Agreement become entitled to an abatement of Ground Rental, the constant factor of the Ground Rental shall be reduced for each calendar day or major fraction thereof that the abatement remains in effect at the constant factor daily rate of $0.003671 for each square foot of land the use of which is denied the Lessee subject to adjustment as provided herein (it being understood that there shall be no abatement of Ground Rental under the Lease for any portion of the premises other than land area or for any portion of the term except as specifically provided in this Agreement).

(ii) During the period commencing on the first anniversary of the Rental Payment Start Date and continuing through the balance of the term of the letting, both dates inclusive, in the event the Lessee shall at any time by the provisions of this Agreement

become entitled to an abatement of Ground Rental, the applicable constant factor of the Ground Rental shall be reduced for each calendar day or major fraction thereof that the abatement remains in effect at the applicable constant factor daily rate for each square foot of land the use of which is denied the Lessee subject to adjustment as provided herein (it being understood that there shall be no abatement of Ground Rental under the Lease for any portion of the premises other than the land area for any portion of the term except as specifically provided in this Agreement).

(iii) During any annual period from and after the first anniversary of the Rental Payment Start Date and continuing through the balance of the term of the letting hereunder, whenever the Lessee shall be entitled hereunder to an abatement of Ground Rental, the applicable annual Ground Rental amount established for such annual period shall be reduced in the same proportion as the applicable annual installment of Ground Rental for each annual period or portion thereof that the abatement is in effect.

(b)(i) In addition, during the period commencing on the Rental Payment Start Date and continuing through the day preceding the first (1st) anniversary of such date, both dates inclusive, the Airport Services Factor of the Ground Rental shall be reduced for each calendar day or major fraction thereof the abatement remains in effect for each square foot of land the use of which is denied the Lessee at the daily rate of $0.006157 (hereinafter the "variable rate") subject to adjustment as provided herein. No abatement of the Airport Services Factor shall be for other than land area.

(ii) After the close of calendar year and after the close of each calendar year thereafter, the Port Authority will adjust the variable rate, upwards or downwards, as provided in Schedule A. The resultant variable rate shall constitute the final variable abatement rate for the calendar year for which the adjustment is being made. It shall also constitute the tentative variable abatement rate for the calendar year in which such rate is calculated and for the following year until the next succeeding final variable abatement rate is calculated.

(iii) If there has been an abatement during a calendar year, any excess in the amount by which the Airport Services Factor is reduced for any calendar year resulting from the adjustment of the variable rate shall be paid to the Port Authority by the Lessee within (30) days after demand therefore and any deficiency in said amount determined on the basis of an adjusted variable rate shall be credited against future Ground Rentals, such credit to be made within thirty (30) days following adjustment of the variable rate.

(iv) The Lessee understands that while the final variable rate for the calendar year in which the expiration date of the Lease falls will not be determined for some months after such expiration and, if in fact there was an abatement during said calendar year, that the Lessee's obligations to pay any excess in the amount by which the Airport Services Factor may have been abated for said calendar year or the Port Authority's obligation to pay any deficiency in said amount resulting from the determination of the final variable rate for said calendar year shall survive such expiration of the Lease and shall remain in full force and effect until such excess of deficiency, if any, is paid. The Lessee hereby specifically acknowledges that

neither the survival of the obligation with respect to any such excess or deficiency nor any other provision of the Lease shall grant or shall be deemed to grant any rights whatsoever to the Lessee to have the term of the letting extended for any period beyond the expiration thereof or affect in any way the Port Authority's right to terminate this Agreement as provided herein.

Section 5. Condition of the Premises

(a) The Lessee hereby acknowledges that it has not relied upon any representation or statement of the Port Authority or its Commissioners, officers, employees or agents as to the condition of the premises, or its fitness for use as a multi-fuel vehicle service station. The Lessee, prior to the execution of this Agreement, has thoroughly examined the premises and determined them to be suitable for the Lessee's operation hereunder and the Lessee hereby agrees to take the premises in the condition they are in as of the commencement of the term of the letting hereunder and to assume all responsibility for any and all risks, costs and expenses of any kind whatsoever caused by, arising out of or in connection with, the condition of the premises whether any aspect of such condition existed prior to, on or after the effective date of the letting of the premises hereunder including without limitation all Environmental Requirements and Environmental Damages, and to indemnify and hold harmless the Port Authority for all such risks, requirements, costs and expenses. Without limiting any obligation of the Lessee to commence operations hereunder at the time and in the manner stated elsewhere in this Agreement, the Lessee agrees that no portion of the premises will be used initially or at any time during the letting which is in a condition unsafe or improper for the conduct of the Lessee's operations hereunder so that there is possibility of injury or damage to life or property. It is hereby understood and agreed that whenever reference is made in this Lease to the condition of the premises as of the commencement of the term thereof, the same shall be deemed to mean the condition of the premises as of the date of this Agreement, and as to the improvements made and the alteration work performed during the term of the Agreement in the condition existing after the completion of the same. The Lessee understands that it will be its responsibility to furnish and install (subject to the provisions of Section 6 of the Lease) all pumps, trade fixtures, accessories, equipment and other property including any necessary removal and demolition and to perform all work as may be necessary to put the multi-fuel service station in first class operating condition for the purposes set forth in Section 3 hereof.

(b) All the obligations of the Lessee under this Section with respect to the responsibilities, risks, costs and expenses assumed by the Lessee shall survive the expiration or termination of this Agreement.

Section 6. Construction by the Lessee

(a) The Lessee shall, prior to its submission to the Port Authority of the plans and specifications hereinafter provided for, submit to the Port Authority for its consent, the Lessee's comprehensive plan for the development of the site, including but not limited to renderings, layouts, locations, models, estimated commencement and completion dates, and preliminary functional plans.

(1) Without limiting the above, the Lessee agrees that said comprehensive plan shall include the construction on and under the site of:

(i) A multi- vehicle fuel service station, service bay area, waiting area, customer counter, dual bay car wash (one automated; one full service) , convenience store and restroom facilities consisting of approximately 3,200 square feet of space;

(ii) all appropriate lines, pipes, mains, cables, manholes, wires, tubes, ducts, assemblies, conduits and other facilities required in connection with or relating to the mechanical, utility, electrical, storm sewer, sanitary sewer, telephone, fire alarm, fire protection, gas, heating, ventilation and air-conditioning, steam, drainage, communications, and other systems needed for the multi-fuel service station and dual bay car wash (one automated; one full service) ;

(iii) all necessary or appropriate ground roadways, ramps, sidewalks, vehicular service areas, and pedestrian circulation areas, together with all related and associated areas and facilities, including an access ramp to the premises from the on-ramp to the Central Terminal Roadway (the foregoing being herein sometimes called the "circulation areas");

(iv) all grading and paving of ground areas and appropriate landscaping together with all related and associated work;

(v) all necessary or required fencing; and

(vi) All other appropriate or necessary work in connection with the foregoing items, including without limitation thereto, all borings, surveys, route marker signs, obstruction lights and material inspections and also including any tie-ins to utility lines and roadway access stubs.

(2) All of the foregoing work shall be constructed by the Lessee on the site and off the site where required, and where constructed on the site shall be and become a part of the premises under the Lease and is sometimes collectively referred to herein as the "construction work".

(3) The Lessee shall keep the comprehensive plan covered by this paragraph (a) up to date and shall submit to the Port Authority for its prior approval any amendments, revisions, or modifications thereof.

(b)(1) Prior to the commencement of the Construction Work, the Lessee shall cause to be delivered to the Port Authority a payment and performance bond in favor of the Port Authority (in the form attached hereto as Exhibit B and hereby made a part hereof) in an amount equal to the total contract price of the Construction Work in compliance with the approved plans

and specifications, protecting the Port Authority from monetary risk during, relating to or arising out of the construction work, issued by a surety company listed in the Financial Management Service of the United State Department of Treasury. Such payment and performance bond shall be in effect during the period from the commencement of the construction work to and including the Completion Date (as herein defined) and the Lessee shall keep and maintain said payment and performance bond in full force and effect. The said payment and performance bond shall be in an amount equal to the entire contract price for the construction work. Said payment and performance bond shall guarantee the full, faithful and prompt performance of and compliance with, on the part of the Lessee, all of the terms, provisions, covenants and conditions of this Agreement relating to the construction work. The existence of the payment and performance bond described in this Agreement shall not limit or alter any other remedies of the Port Authority under this Agreement, and the Port Authority may from time to time and at any time elect to pursue (or not to pursue) its rights under any payment and performance bond without thereby limiting, voiding or relinquishing any of its other rights or remedies under this Agreement.

(2) Prior to the commencement of the construction work, the Lessee shall submit to the Port Authority for the Port Authority's approval complete plans and specifications therefor. The Port Authority may refuse to grant approval with respect to the construction work if, in its opinion, any of the proposed construction work as set forth in said plans and specifications (all of which shall be in such detail as may reasonably permit the Port Authority to make a determination as to whether the requirements hereinafter referred to are met) shall:

(i) Be unsafe, unsound, hazardous or improper for the use and occupancy for which it is designed, or

(ii) Not comply with the Port Authority's requirements for harmony of external architecture of similar existing or future improvements at the Airport, or

(iii) Not comply with the Port Authority's requirements with respect to external and interior building materials and finishes of similar existing or future improvements at the Airport, or

(iv) Be designed for use for purposes other than those authorized under the Agreement, or

(v) Set forth ground elevations or heights other than those prescribed by the Port Authority, or

(vi) Not be at locations or not be oriented in accordance with the Lessee's approved comprehensive plan, or

(vii) Not comply with the provisions of the Basic Lease, as defined in the Section of this Agreement, entitled "Definitions", including without limiting the generality thereof, those provisions of the Basic Lease providing that the Port

Authority will conform to the enactments, ordinances, resolutions and regulations of the City of Newark and its various departments, boards and businesses in regard to the construction and maintenance of buildings and structures and in regard to health and fire protection which would be applicable if the Port Authority were a private corporation to the extent that the Port Authority finds it practicable so to do, or

(viii) Be in violation or contravention of any other provisions and terms of this Agreement, or

(ix) Not comply with all applicable governmental laws, ordinances, enactments, resolutions, rules and orders, or

(x) Not comply with all applicable requirements of the National Board of Fire Underwriters and the Fire Insurance Rating Organization of New Jersey, or

(xi) Not comply with the Port Authority's requirements with respect to landscaping, or

(xii) Not comply with Port Authority's requirements and standards with respect to noise, air pollution, water pollution or other types of pollution, or

(xiii) Not comply with the construction limitations set forth in Exhibit A, or

(xiv) Not comply with the American National Standard Specifications for Buildings and Facilities-Providing Accessibility and Usability for Physically Handicapped People, ANSI A117.1-1986.

(c) All construction work shall be done in accordance with the following terms and conditions:

(1) The Lessee hereby assumes the risk of loss or damage to all of the construction work prior to the completion thereof and the risk of loss or damage to all property of the Port Authority arising out of or in connection with the performance of the construction work. In the event of such loss or damage, the Lessee shall forthwith repair, replace and make good the construction work and the property of the Port Authority without cost or expense to the Port Authority. The Lessee shall itself and shall also require its contractors to indemnify and hold harmless the Port Authority, its Commissioners, officers, agents and employees from and against all claims and demands, just or unjust, of third persons (including employees, officers, and agents of the Port Authority) arising or alleged to arise out of the performance of the construction work and for all expenses incurred by it and by them in the defense, settlement or satisfaction thereof, including without limitation thereto, claims and demands for death, for personal injury or for property damage, direct or consequential, whether they arise from the acts or omissions of the Lessee, of any contractors of the Lessee, of the Port Authority, or of third

persons, or from acts of God or of the public enemy, or otherwise, (including claims of the City of New Jersey against the Port Authority pursuant to the provisions of the Basic Lease whereby the Port Authority has agreed to indemnify the City against claims), excepting only claims and demands which result solely from affirmative willful acts done by the Port Authority, its Commissioners, officers, agents and employees with respect to the construction work.

If so directed, the Lessee shall at its own expense defend any suit based upon any such claim or demand (even if such suit, claim or demand is groundless, false or fraudulent), and in handling such it shall not, without obtaining express advance written permission from the General Counsel of the Port Authority, raise any defense involving in any way the jurisdiction of the tribunal over the person of the Port Authority, the immunity of the Port Authority, its Commissioners, officers, agents or employees, the governmental nature of the Port Authority, or the provisions of any statutes respecting suits against the Port Authority.

(2) Prior to engaging or retaining an architect or architects for the construction work, the name or names of said architect or architects shall be submitted to the Port Authority for its approval. The Port Authority shall have the right to disapprove any architect who may be unacceptable to it. All construction work shall be done in accordance with plans and specifications to be submitted to and approved by the Port Authority prior to the commencement of the construction work, and until such approval has been obtained the Lessee shall continue to resubmit plans and specifications as required. Upon approval of such plans and specifications by the Port Authority, the Lessee shall proceed diligently at its sole cost and expense to perform the construction work. All construction work, including workmanship and materials, shall be of first class quality. The Lessee shall re-do, replace or construct at its own cost and expense, any construction work not done in accordance with the approved plans and specifications, the provisions of this Section 2 or any further requirements of the Port Authority.

The Lessee shall expend not less than Four Million Nine Hundred Fifty Thousand Dollars and No Cents ($4,950,000.00) with respect to the construction work. The Lessee shall complete the construction work no later than Three Hundred (300) days following the Commencement Date as defined in Section 2 of this Agreement.

(3) Prior to entering into a contract for any part of the construction work, the Lessee shall submit to the Port Authority for its approval the names of the contractors to whom the Lessee proposes to award said contracts. The Port Authority shall have the right to disapprove any contractor who may be unacceptable to it. The Lessee shall include in all such contracts such provisions and conditions as may be reasonably required by the Port Authority. Without limiting the generality of the foregoing all of the Lessee's construction contracts shall provide as follows: "If (i) the Contractor fails to perform any of his obligations under the Contract, including his obligation to the Lessee to pay any claims lawfully made against him by any materialman, subcontractor or workman or other third person which arises out of or in connection with the performance of the Contract or (ii) any claim (just or unjust) which arises out of or in connection with the Contract is made against the Lessee or (iii) any subcontractor under the Contract fails to pay any claims, lawfully made against him by any materialman, subcontractor, workman or other third persons which arises out of or in connection with the Contract or if in the Lessee's opinion any of the aforesaid contingencies is likely to arise, then the

Lessee shall have the right, in its discretion, to withhold out of any payment (final or otherwise and even though such payments have already been certified as due) such sums as the Lessee may deem ample to protect it against delay or loss or to assume the payment of just claims of third persons, and to apply such sums in such manner as the Lessee may deem proper to secure such protection or satisfy such claims. All sums so applied shall be deducted from the Contractor's compensation. Omission by the Lessee to withhold out of any payment, final or otherwise, a sum for any of the above contingencies, even though such contingency has occurred at the time of such payment, shall not be deemed to indicate that the Lessee does not intend to exercise its right with respect to such contingency. Neither the above provisions for rights of the Lessee to withhold and apply monies nor any exercise, or attempted exercise of, or omission to exercise such rights by the Lessee shall create any obligation of any kind to such materialmen, subcontractors, workmen or other third persons. Until actual payment is made to the Contractor, his right to any amount to be paid under the Contract (even though such amount has already been certified as due) shall be subordinate to the rights of the Lessee under this provision."

The Lessee shall file with the Port Authority a copy of its contracts with its contractors prior to start of the construction work.

(4) The Lessee shall furnish or require its architect to furnish a full time resident engineer during the construction period. The Lessee shall require certification by a licensed engineer of all pile driving data, if applicable, and of all controlled concrete work and such other certifications as may be requested by the Port Authority from time to time.

(5) The Lessee agrees to be solely responsible for any plans and specifications used by it and for any loss or damages resulting from the use thereof, notwithstanding that the same have been approved by the Port Authority and notwithstanding the incorporation therein of Port Authority recommendations or requirements. Notwithstanding the requirement for approval by the Port Authority of the contracts to be entered into by the Lessee or the incorporation therein of Port Authority requirements or recommendations, and notwithstanding any rights the Port Authority may have reserved to itself hereunder, the Port Authority shall have no liabilities or obligations of any kind to any contractors engaged by the Lessee or for any other matter in connection therewith and the Lessee hereby releases and discharges the Port Authority, its Commissioners, officers, representatives and employees of and from any and all liability, claims for damages or losses of any kind, whether legal or equitable, or from any action or cause of action arising or alleged to arise out of the performance of any construction work pursuant to the contracts between the Lessee and its contractors. Any warranties contained in any construction contract entered into by the Lessee for the performance of the construction work hereunder shall be for the benefit of the Port Authority as well as the Lessee, and the contract shall so provide.

(6) The Port Authority shall have the right, through its duly designated representatives, to inspect the construction work and the plans and specifications thereof, at any and all reasonable times during the progress thereof and from time to time, in its discretion, to take samples and perform testing on any part of the construction work.

(7) The Lessee agrees that it shall deliver to the Port Authority two (2) sets of "as built" drawings of the construction work in an electronic CADD data file on a CD Rom in a format to be designated by the Port Authority, all of which shall conform to the specifications of the Port Authority (the receipt of a copy of said specifications prior to the execution of this Lease being hereby acknowledged by the Lessee). The Lessee shall during the term of this Lease keep said digital electronic files of drawings and said electronic CADD data files current showing thereon any changes or modifications which may be made and provide copies thereof to the Port Authority as the Port Authority may request from time to time. No changes or modifications shall be made without prior Port Authority consent.

(8) The Lessee shall, if requested by the Port Authority, take all reasonable measures to prevent erosion of the soil and the blowing of sand during the performance of the construction work, including but not limited to the fencing of the premises or portions thereof or other areas and the covering of open areas with asphaltic emulsion or similar materials as the Port Authority may direct.

(9) Title to any soil, dirt, sand or other matter (hereinafter in this item (9) collectively called "the matter") excavated by the Lessee during the course of the construction work shall vest in the Port Authority and the matter (other than portions of the matter used by the Lessee in the construction work as may be approved by the Port Authority) shall be delivered by the Lessee at its expense to any location on the Airport as may be designated by the Port Authority or to any location off the Airport within the Port of New York District. The entire proceeds, if any, of the sale or other disposition of the matter shall belong to the Port Authority. Notwithstanding the foregoing the Port Authority may elect by prior written notice to the Lessee to waive title to all or portions of the matter in which event the Lessee at its expense shall dispose of the same without further instruction from the Port Authority;

(10) The Lessee shall pay or cause to be paid all claims lawfully made against it by its contractors, subcontractors, materialmen and workmen, and all claims lawfully made against it by other third persons arising out of or in connection with or because of the performance of the construction work, and shall cause its contractors and subcontractors to pay all such claims lawfully made against them, provided, however, that nothing herein contained shall be construed to limit the right of the Lessee to contest any claim of a contractor, subcontractor, materialman, workman and/or other person and no such claim shall be considered to be an obligation of the Lessee within the meaning of this Section unless and until the same shall have been finally adjudicated. The Lessee shall use its best efforts to resolve any such claims and shall keep the Port Authority fully informed of its actions with respect thereto. Nothing herein contained shall be deemed to constitute consent to the creation of any liens or claims against the premises nor to create any rights in said third persons against the Port Authority or the Lessee.

(11) (i) The Lessee in its own name as insured and including the Port Authority as an additional insured shall procure and maintain Comprehensive General Liability insurance, including but not limited to premises-operations, products liability-completed operations, explosion, collapse and underground property damages, personal injury and independent contractors, with a broad form of property damage endorsement, and with a

contractual liability endorsement covering the obligations assumed by the Lessee pursuant to subparagraphs (1) and (5) of this paragraph (c), and Comprehensive Automobile Liability insurance covering owned, non-owned and hired vehicles. The said Comprehensive General Liability insurance policy shall have a limit of not less than $25,000,000 combined single limit per accident for bodily injury and property damage liability. The said Automobile Liability insurance policy shall have a limit of not less than $5,000,000 per accident for bodily injury and property damage liability.

Without limiting the provisions hereof, in the event the Lessee maintains the foregoing insurance in limits greater than aforesaid, the Port Authority shall be included therein as an additional insured to the full extent of all such insurance in accordance with all the terms and provisions hereof.

The foregoing shall be in addition to all policies of insurance otherwise required by this Agreement, or the Lessee may provide such insurance by requiring each contractor engaged by it for the construction work to procure and maintain such insurance including such contractual liability endorsement, said insurance, whether procured by the Lessee or by a contractor engaged by it as aforesaid, not to contain any exclusion for bodily injury to or sickness, disease or death of any employee of the Lessee or of any of its contractors which would conflict with or in any way impair coverage under the contractual liability endorsement. Further, the Lessee shall provide and maintain or cause its contractors to provide and maintain contractor's property and equipment coverage for the full value of such property and equipment with the Port Authority insured thereunder as its interests may appear. All of the aforesaid policy or policies of insurance shall also provide or contain an endorsement providing that the protections afforded the Lessee thereunder with respect to any claim or action against the Lessee by a third person shall pertain and apply with like effect with respect to any claim or action against the Lessee by the Port Authority, and shall also provide or contain an endorsement providing that the protections afforded the Port Authority thereunder with respect to any claim or action against the Port Authority by the Lessee or its contractor(s) shall be the same as the protections afforded the Lessee thereunder with respect to any claim or action against the Lessee by a third person as if the Port Authority were the named insured thereunder; but such provision or endorsement shall not limit, vary or affect the protections afforded the Port Authority thereunder as an additional insured.

(ii) The Lessee shall also procure and maintain in effect, or cause to be procured and maintained in effect Workers' Compensation Insurance and Employer's Liability Insurance in accordance with and as required by law.

(iii) The insurance required hereunder in this subparagraph (11) shall be maintained in effect during the performance of the construction work and shall be in compliance and subject to the provisions of paragraph (c) of Section 14 hereof.

(12)The Lessee shall be under no obligation to reimburse the Port Authority for expenses incurred by the Port Authority in connection with its normal review and approval of the original plans and specifications submitted by the Lessee pursuant to this Section. The Lessee however agrees to pay to the Port Authority upon its demand the expenses incurred by the

Port Authority in connection with any additional review for approval of any changes, modifications or revisions of the original plans and specifications which may be proposed by the Lessee for the Port Authority's approval. The expenses of the Port Authority for any such additional review and approval shall be computed on the basis of direct payroll time expended in connection therewith plus 100%. Wherever in this Lease reference is made to "direct payroll time", costs computed thereunder shall include a prorata share of the cost to the Port Authority of providing employee benefits, including, but not limited to, pensions, hospitalization, medical and life insurance, vacations and holidays. Such computations shall be in accordance with the Port Authority's accounting principles as consistently applied prior to the execution of this Lease.

(13)The Lessee shall prior to the commencement of construction and at all times during construction submit to the Port Authority all engineering studies with respect to construction and samples of construction materials as may be required at any time and from time to time by the Port Authority.

(14)The Lessee shall procure and maintain Builder's Risk (All Risk) Completed Value Insurance covering the construction work during the performance thereof including material delivered to the site but not attached to the realty. Such insurance shall be in compliance with and subject to the applicable provisions of Section 13 hereof and shall name the Port Authority, the City of Newark, the Lessee and its contractors and subcontractors as additional insureds and such policy shall provide that the loss shall be adjusted with and payable to the Lessee. Such proceeds shall be used by the Lessee for the repair, replacement or rebuilding of the construction work and any excess shall be paid over to the Port Authority. The policies or certificates representing insurance covered by this paragraph (14) shall be delivered by the Lessee to the Port Authority at least thirty (30) days prior to the commencement of the construction work, and each policy or certificate delivered shall bear the endorsement of or be accompanied by evidence of payment of the premium thereof and, also, a valid provision obligating the insurance company to furnish the modification of the insurance evidenced by said policy or certificate. Renewal policies or certificates shall be delivered to the Port Authority at least fifteen (15) days before the expiration of the insurance which such policies are to renew.

The insurance covered by this paragraph (14) shall be written by companies approved by the Port Authority. If at any time any of the insurance policies shall be or become unsatisfactory to the Port Authority as to the form or substance or if any of the carriers issuing such policies shall be or become unsatisfactory to the Port Authority, the Lessee shall promptly obtain a new and satisfactory policy in replacement. If at any time the Port Authority so requests, a certified copy of each of the said policies shall be delivered to the Port Authority.

(15)The Lessee shall at the time of submitting the comprehensive plan to the Port Authority as provided in paragraph (a) hereof submit to the Port Authority its forecasts of the number of people who will be working at various times during the term of the Lease at the premises, the expected utility demands of the premises, noise profiles and such other information as the Port Authority may require. The Lessee shall continue to submit its latest forecasts and such other information as may be required as aforesaid as the Port Authority shall from time to time and at any time request.

(16)The Lessee shall execute and submit for the Port Authority's approval a Construction Application or Applications in the form prescribed by the Port Authority covering the construction work or portions thereof. The Lessee shall comply with all the terms and provisions of the approved Construction Applications. In the event of any inconsistency between the terms of any Construction Application and the terms of this Lease, the terms of this Lease shall prevail and control.

(17)Nothing contained in this Lease shall grant or be deemed to grant to any contractor, architect, supplier, subcontractor or any other person engaged by the Lessee or any of its contractors in the performance of any part of the construction work any right of action or claim against the Port Authority, its Commissioners, officers, agents and employees with respect to any work any of them may do in connection with the construction work. Nothing contained herein shall create or be deemed to create any relationship between the Port Authority and any such performance of any part of the construction work and the Port Authority shall not be responsible to any of the foregoing for any payments due or alleged to be due thereto for any work performed or materials purchased in connection with the construction work.

(18)(i) Without limiting any of the terms and conditions of this Lease, the Lessee understands and agrees that it shall put into effect prior to the commencement of any construction work an affirmative action program and Minority Business Enterprise (MBE) program and Women-owned Business Enterprise (WBE) program in accordance with the provisions of Schedule E, attached hereto and hereby made a part hereof. The provisions of said Schedule E of this Lease shall be applicable to the Lessee's contractor or contractors and subcontractors at any tier of construction as well as to the Lessee itself and the Lessee shall include the provisions of said Schedule E within all of its construction contracts so as to make said provisions and undertaking the direct obligation of the construction contractor or contractors and subcontractors at any tier of construction. The Lessee shall and shall require its said contractor, contractors and subcontractors to furnish to the Port Authority such data, including but not limited to compliance reports relating to the operation and implementation of the affirmative action, MBE and WBE programs called for hereunder as the Port Authority may request at any time and from time to time regarding the affirmative action, Minority Business Enterprises and Women-owned Business Enterprises programs of the Lessee and its contractor, contractors, and subcontractors at any tier of construction, and the Lessee shall and shall also require that its contractor, contractors and subcontractors at any tier of construction make and put into effect such modifications and additions thereto as may be directed by the Port Authority pursuant to the provisions hereof and said Schedule E to effectuate the goals of affirmative action and Minority Business Enterprise and Women-owned Business Enterprise programs.

(ii) In addition to and without limiting any terms and provisions of this Lease, the Lessee shall provide in its contracts and all subcontracts covering the construction work or any portion thereof, that:

(aa) The contractor shall not discriminate against employees or applicants for employment because of race, creed, color, national origin, sex, age, disability or marital status, and shall undertake or continue existing programs of

affirmative action to ensure that minority group persons are afforded equal employment opportunity without discrimination. Such programs shall include, but not be limited to, recruitment, employment, job assignment, promotion, upgrading, demotion, transfer, layoff, termination, rates of pay or other forms of compensation, and selections for training or retraining, including apprenticeships and on-the-job training;

(bb) At the request of either the Port Authority or the Lessee, the contractor shall request such employment agency, labor union, or authorized representative of workers with which it has a collective bargaining or other agreement or understanding and which is involved in the performance of the contract with the Lessee to furnish a written statement that such employment agency, labor union or representative shall not discriminate because of race, creed, color, national origin, sex, age, disability or marital status and that such union or representative will cooperate in the implementation of the contractor's obligations hereunder;

(cc) The contractor will state, in all solicitations or advertisements for employees placed by or on behalf of the contractor in the performance of the contract, that all qualified applicants will be afforded equal employment opportunity without discrimination because of race, creed, color, national origin, sex, age, disability or marital status;

(dd) The contractor will include the provisions of subparagraphs (aa) through (cc) of this paragraph in every subcontract or purchase order in such a manner that such provisions will be binding upon each subcontractor or vendor as to its work in connection with the contract;

(ee) "Contractor" as used herein shall include each contractor and subcontractor at any tier of construction.

(d) (1) The construction work shall be constructed in such a manner that there will be at all times a minimum of air pollution, water pollution or any other type of pollution and a minimum of noise emanating from, arising out of or resulting from the operation, use or maintenance thereof by the Lessee and from the operations of the Lessee under this Agreement. Accordingly, and in addition to all other obligations imposed on the Lessee under this Agreement and without diminishing, limiting, modifying or affecting any of the same, the Lessee shall be obligated to construct as part of the construction work hereunder such structures, fences, equipment, devices and other facilities as may be necessary or appropriate to accomplish the foregoing and each of the foregoing shall be and become a part of construction work it affects and all of the foregoing shall be covered under the comprehensive plan of the Lessee submitted under paragraph (a) hereof and shall be part of the construction work hereunder.

(2) Notwithstanding the provisions of subparagraph (1) above and in addition thereto, the Port Authority hereby reserves the right from time to time and at any time during the term of the Lease to require the Lessee, subsequent to the completion of the construction work to design and construct at its sole cost and expense such further reasonable structures, fences, equipment, devices and other facilities as may be necessary or appropriate to

accomplish the objectives as set forth in the first sentence of said Subparagraph (1). All locations, the manner, type and method of construction and the size of any of the foregoing shall be determined by the Port Authority. The Lessee shall submit for Port Authority approval its plans and specifications covering the required work and upon receiving such approval shall proceed diligently to construct the same. All other provisions of this Section 6 with respect to the construction work shall apply and pertain with like effect to any work which the Lessee is obligated to perform pursuant to this paragraph (d) and upon completion of each portion of such work it shall be and become a part of the construction work. The obligations assumed by the Lessee under this paragraph (d) are a special inducement and consideration to the Port Authority in granting this Lease to the Lessee.

(e) Title to all the construction work shall pass to the City of Newark the same or any part thereof is erected, constructed or installed, and shall be and become a part of the premises if located within the site.

(f) (1) When the construction work is substantially completed and ready for use the Lessee shall advise the Port Authority to such effect and shall deliver to the Port Authority a certificate signed by an authorized officer of the Lessee and also signed by the Lessee's licensed architect or engineer certifying that the construction work has been constructed in accordance with the approval plans and specifications and the provisions of this Lease and in compliance with all applicable laws, ordinances and governmental rules, regulations and orders. Thereafter, the construction work will be inspected by the Port Authority and if the same has been completed as certified by the Lessee and the Lessee's licensed architect or engineer, as aforesaid, a certificate to such effect shall be delivered to the Lessee, subject to the condition that all risks thereafter with respect to the construction and installation of the same and any liability therefor for negligence or other reason shall be borne by the Lessee. The Lessee shall not use or permit the use of the construction work or any portion thereof for the purposes set forth in the Lease until such certificate is received from the Port Authority and the Lessee shall not use or permit the use of the construction work or any portion thereof even if such certificate is received if the Port Authority states in any such certificate that the same cannot be used until other specified portions are completed.

(2) The term "Completion Date" for the purposes of this Lease shall mean the date appearing on the certificate issued by the Port Authority pursuant to subparagraph (1) of this paragraph (f).

(3) In addition to and without affecting the obligations of the Lessee under the preceding subparagraphs (1) and (2), when an integral and material portion of the construction work is substantially completed or is properly usable the Lessee may advise the Port Authority to such effect and may deliver to the Port Authority a certificate signed by an authorized officer of the Lessee and also signed by the Lessee's licensed architect or engineer certifying that such portion of the construction work has been constructed in accordance with the approved plans and specifications and the provisions of this Lease and in compliance with all applicable laws, ordinances and governmental rules, regulations and orders, and specifying that such portion of the construction work can be properly used even though the construction work has not been completed and that the Lessee desires such use. The Port Authority may in its sole

discretion deliver a certificate to the Lessee with respect to each such portion of the construction work permitting the Lessee to use such portion thereof for the purposes set forth in the Lease. In such event the Lessee may use such portion subject to the condition that all risks thereafter with respect to the construction and installation of the same and any liability therefor for negligence or other reason shall be borne by the Lessee, and subject to the risks as set forth in paragraph (d) hereof in the event that the Port Authority shall not have then approved the complete plans and specifications for the construction work. Moreover, at any time prior to the issuance of the certificate required in subparagraph (1) above for the construction work, the Lessee shall promptly upon receipt of a written notice from the Port Authority cease its use of such portion of the construction work which it had been using pursuant to permission granted in this subparagraph (3).

(g) The Lessee understands that there may be communications and utility lines and conduits located on or under the site, which do not, and may not in the future, serve the premises. The Lessee agrees at its sole cost and expense, if directed by the Port Authority so to do, to relocate and reinstall such communications and utility lines and conduits on the site or off the site as directed by the Port Authority and to restore all affected areas (such work being hereinafter collectively called "the relocation work"). The Lessee shall perform the relocation work subject to and in accordance with all the terms and provisions of this Section 6 and the relocation work shall be and become a part of the construction work, it being understood, however, that the relocation work shall not be or become a part of the premises hereunder.

(h) The Lessee will give the Port Authority fifteen (15) days' notice prior to the commencement of construction. The Port Authority will assign a field engineer to the Construction Work for such periods of time as the Port Authority, in its sole discretion, shall deem desirable from time to time up to and including five (5) days per week. The Lessee shall pay to the Port Authority for the services of said engineer at the following daily rates (prorated approximately for periods of less than one day): the rate of $835.00 per day from January 1, 2008 to and including December 31, 2008; and at the rate of $870.00 per day for the period from January 1, 2009 to and including December 31, 2009. Nothing herein shall prevent the Lessee from requesting the Port Authority to assign said engineer more frequently than as set forth herein, or the Port Authority from complying with such request, but the Port Authority shall not be obligated to do so. Nothing contained herein shall affect any of the provisions of paragraph (f) hereof or the rights of the Port Authority thereunder.

(i) Nothing contained in the Lease shall grant or be deemed to grant any contractor, architect, supplier, subcontractor or any other person engaged by the Lessee or any of its contractors in the performance of any part of the construction work any right of action or claim against the Port Authority, its Commissioners, officers, agents and employees with respect to any work any of them may do in connection with the construction work. Nothing contained herein shall create or be deemed to create any relationship between the Port Authority and any such contractor, architect, supplier, subcontractor or any other person engaged by the Lessee or any of its contractors in the performance of any part of the construction work and the Port Authority shall not be responsible to any of the foregoing for any payments due or alleged to be due thereto for any work performed or materials purchased in connection with the construction work.

Section 7. Ingress and Egress

(a) The Lessee, its officers, employees, customers, patrons, invitees, contractors, suppliers of material and furnishers of services, shall have the right of ingress and egress between the premises and a city street or public ways outside the Airport by means of such pedestrian roadways to be used in common with others having rights of passage within the Airport, provided, however, that the Port Authority may from time to time substitute other reasonably equivalent means of ingress and egress.

(b) The use of any such roadway shall be subject to the Rules and Regulations of the Port Authority which are now in effect or which may hereafter be promulgated for the safe and efficient operation of the Airport. The Port Authority may, at any time, temporarily or permanently close, or consent to or request the closing of any such roadway and any other area at the Airport presently or hereafter used as such, so long as a reasonable means of ingress and egress as provided in paragraph (a) above is concurrently made available to the Lessee. The Lessee hereby releases and discharges the Port Authority, its successors and assigns, of and from any and all claims, demands or causes of action which the Lessee may now or at any time hereafter have against any of the foregoing, arising or alleged to arise out of the closing of any street, roadway, or other area, whether within or outside the Airport.

Section 8. Compliance with Governmental Requirements

(a) The Lessee shall promptly observe comply with and execute the provisions of any and all present and future governmental laws, rules and regulations, orders and directions which may pertain or apply to (i) the premises, (ii) the operations of the Lessee on the premises hereunder or the Airport, (iii) the occupancy or use of the premises or (iv) with regard to Environmental Requirements only, property outside the premises as a result of the Lessee's use and occupancy of the premises or a migration of Hazardous substances from the premises. The Lessee shall, in accordance with and subject to the provisions of Section 6 hereof, make any and all structural and non-structural improvements, alterations or repairs of the premises and perform all remediation work and clean up of Hazardous Substances required in order to fully satisfy the compliance obligations set forth herein.

(b) The Lessee shall procure from all governmental authorities having jurisdiction over the operations of the Lessee hereunder and shall maintain in full force and effect throughout the term of this Agreement all licenses, certificates, permits or other authorization which may be necessary for the conduct of such operations. "Governmental authority" shall not be construed as intending to include the Port Authority of New York and New Jersey, the lessor under this Agreement.

(c) The obligation of the Lessee to comply with governmental requirements is provided herein for the purpose of assuring proper safeguards for the protection of persons and

property on the premises. Such provision is not to be construed as a submission by the Port Authority to the application to itself of such requirements or any of them.

(d) Since the Port Authority has agreed in the Basic Lease to conform to the enactments, ordinances, resolutions and regulations of the City of Newark and its various departments, boards and bureaus in regard to the construction and maintenance of buildings and structures and in regard to health and fire protection which would be applicable if the Port Authority were a private corporation to the extent that the Port Authority finds it practicable so to do, the Lessee shall comply with all such enactments, ordinances, resolutions and regulations which would be applicable to its operations hereunder if the Port Authority were a private corporation, except in cases where the Port Authority either notifies the Lessee that it need not comply with or directs it not to comply with any such enactments, ordinances, resolutions or regulations which are applicable only because of the Port Authority's agreement in the Basic Lease. The Lessee shall, for the Port Authority's information, deliver to the Port Authority promptly after receipt of any notice, warning, summons, or other legal process for the enforcement of any such enactment, ordinance, resolution or regulation a true copy of the same. Any direction by the Port Authority to the Lessee not to comply with any such enactment, ordinance, resolution or regulation shall be given only pursuant to a resolution duly adopted by the Board of Commissioners of the Port Authority or by an authorized committee of its Board and if any such direction is given by the Port Authority to the Lessee, the Port Authority, to the extent that it may lawfully do so, shall indemnify and hold the Lessee harmless from and against all claims, actions, damages, liabilities, fines, penalties, costs and expenses suffered or incurred by the Lessee as a result of noncompliance with such enactment, ordinance, resolution or regulation.

(e) The Lessee shall have such time within which to comply with the aforesaid laws, ordinances, rules and regulations as the authorities enforcing the same shall allow.

Section 9. Rules and Regulations

(a) The Lessee covenants and agrees to observe and obey (and to require its officers, employees, guests, invitees and those doing business with it to observe and obey) the Rules and Regulations of the Port Authority as now supplemented and now in effect, and such further rules and regulations (including amendments and supplements thereto) applying to the conduct and operations of the Lessee and others on the premises as may from time to time during the letting be promulgated by the Port Authority for reasons of safety, health, or the preservation of property, or for the maintenance of the good and orderly appearance of the premises, or for the safe or efficient operation of the Airport. The obligation of the Lessee to require such observance and obedience on the part of its guests, invitees and business visitors shall obtain only while such persons are on the premises. The Port Authority agrees that except in cases of emergency, it will give notice to the Lessee of every such future rule or regulation adopted by it at least five (5) days before the Lessee shall be required to comply therewith.

(b) If a copy of the Rules and Regulations is not attached, then the Port Authority will notify the Lessee thereof either by delivery of a copy, or by making a copy available at the office of the Secretary of the Port Authority.

Section 10. Various Obligations of the Lessee

(a) The Lessee shall conduct its operations hereunder in an orderly and proper manner, so as not to annoy, disturb or be offensive to others at the Airport. The Lessee shall take all reasonable measures to (1) eliminate vibrations tending to damage any equipment, structure, building or portion of a building which is on the premises, or is a part thereof, or is located elsewhere on the Airport, and (2) to keep the sound level of the operations as low as possible.

(b) The Lessee shall, control the conduct, demeanor and appearance of its employees and invitees and of those doing business with it, and upon objection from the Port Authority concerning the conduct, demeanor or appearance of any such shall immediately take all lawful steps necessary to remove the cause of the objection. If requested by the Port Authority the Lessee shall supply and shall require its employees to wear or carry badges or other suitable means of identification, which shall be subject to the prior and continuing approval of the General Manager of the Airport.

(c) The Lessee shall control all vehicular traffic on the roadways or other areas within the premises and shall take all precautions necessary to promote the safety of its patrons and other persons using such roadways and other areas. The Lessee shall employ such means as may be necessary to direct the movement of vehicular traffic within the premises to prevent traffic congestion on the public roadways leading to the premises.

(d) The Lessee shall daily remove from the Airport by means of facilities provided by it all garbage, debris, and other waste material (whether solid or liquid) arising out of or in connection with its operations hereunder. Any such which may be temporarily stored in the open shall be kept in suitable garbage and waste receptacles, the same to be made of metal or other suitable material, and equipped with tight-fitting covers, and to be of a design safely and properly to contain whatever material may be placed therein; said receptacles being provided and maintained by the Lessee. The receptacles shall be kept covered except when filling or emptying the same. The Lessee shall use extreme care when effecting removal of all such waste material, and shall effect such removal at such times and by such means as first approved by the Port Authority. No facilities of the Port Authority shall be used for such removal unless with its prior consent in writing. No such garbage, debris, or other waste materials shall be or be permitted to be thrown, discharged or deposited into or upon the waters at or bounding the Airport.

(e) From time to time and as often as reasonably required by the Port Authority, the Lessee shall conduct pressure, water-flow, and other appropriate tests of the fire-extinguishing system and apparatus which constitute a part of the premises. The Lessee shall keep in proper functioning order all fire-fighting equipment on the premises and the Lessee shall at all times maintain on the premises adequate stocks of fresh, usable chemicals for use in such system, apparatus and equipment. The Lessee shall notify the Port Authority prior to conducting such tests. If requested by the Port Authority, the Lessee shall furnish the Port Authority with a copy of written reports of such tests.

(f) In addition to compliance by the Lessee with all laws, ordinances, governmental rules, regulations and orders now or at any time in effect during the term of the letting hereunder which as a matter of law are applicable to the operation, use or maintenance by the Lessee of the premises or the operations of the Lessee under this Agreement (the foregoing not to be construed as a submission by the Port Authority to the application to itself of such requirements or any of them), the Lessee agrees that it shall exercise the highest degree of safety and care and shall conduct all its operations under this Agreement and shall operate, use and maintain the premises in accordance with the highest standards of the automotive service station industry and in such manner that there will be at all times a minimum of air pollution, water pollution or any other type of pollution and a minimum of noise emanating from, arising out of or resulting from the operation, use or maintenance of the premises by the Lessee and from the operations of the Lessee under this Agreement. The Port Authority hereby reserves the right from time to time and at any time during the term of the Lease to require the Lessee, and the Lessee agrees, to design and construct at its sole cost and expense such reasonable structures, fences, equipment, devices and other facilities as may be necessary or appropriate to accomplish the objectives as set forth in the first sentence of this paragraph. All locations, the manner, type and method of construction and the size of any of the foregoing shall be determined by the Port Authority. The Lessee shall submit for Port Authority approval its plans and specifications covering the required work and upon receiving such approval shall proceed diligently to construct the same.

The obligations assumed by the Lessee under this paragraph (f) shall continue throughout the term of this Lease and shall not be limited, affected, impaired or in any manner modified by the fact that the Port Authority shall have approved any Construction Application and supporting plans, specifications and contracts covering construction work and notwithstanding the incorporation therein of the Port Authority's recommendations or requirements and notwithstanding that the Port Authority may have at any time during the term of the Lease consented to or approved any particular procedure or method of operation which the Lessee may have proposed, or the Port Authority may have itself prescribed the use of any procedure or method.

(g) The Lessee shall periodically inspect, clean out and maintain the oil separators serving the premises which are located on the premises, if any, and the oil separators located outside the premises, if any, if they exclusively service the premises.

(h) Without limiting any other of the Lessee's operations under the Lease, the Lessee shall provide the General Manager of the Airport at the cost and expense of the Lessee with such information, documentation, records, correspondence, notices, reports, tests, results, and certifications and any other information as the Port Authority shall request in connection with any Environmental Requirements or Environmental Damages, and the Lessee shall promptly acknowledge, swear to, sign or otherwise fully execute the same. The Lessee agrees that any of the foregoing may be filed by the Port Authority with the appropriate governmental authority on behalf of the Lessee at the Lessee's cost and expense. Further, the Lessee agrees unless directed otherwise by the Port Authority, to provide the General Manager of the Airport with copies of all information, documentation, records, correspondence, notice, certifications, reports, test results and all other submissions provided by the Lessee to a governmental authority

and by a governmental authority to the Lessee within two (2) business days that the same are made available to or received by the Lessee with respect to any Environmental Requirements.

(i) In addition to and without limiting the generality of the obligations of the Lessee set forth above and elsewhere in the Lease, the Lessee shall at its sole cost and expense and in accordance with and subject to the provisions of Section 6 hereof, upon notice from the Port Authority, promptly take all actions to completely remove and remediate all Hazardous Substances on the premises or the Airport which result from the Lessee's use and occupancy of the premises or which have been disposed of, released, discharged or otherwise placed on, under or about the premises during the term of the letting hereunder, and to cleanup and remediate all other Hazardous Substances on, about or under the premises or which have migrated from the premises to any adjoining property, which any federal, state or local governmental agency or political subdivision or any Environmental Requirement or any violation thereof require to be remediated, and to cleanup and remediate all Hazardous Substances necessary to mitigate Environmental Damages. The foregoing obligations of the Lessee shall include without limitation the investigation of the environmental condition of the area to be remediated, the presentation of feasibility studies, reports and remedial plans and the performance of any cleanup, remediation, containment, operation, maintenance, monitoring or restoration work; the standard for any of the foregoing to be that standard as required under Environmental Requirements and in the event that any Environmental Requirement sets forth more than one standard, the standard to be applied shall be that which requires the lowest level of a Hazardous Substance. The Lessee agrees that, notwithstanding the foregoing, the Port Authority shall have the right at any time and from time to time, acting in its sole discretion, to designate any standard or standards of remediation or cleanup permitted or required under any Environmental Requirement, and such designation shall be binding upon the Lessee with respect to its obligations hereunder. Any actions of the Lessee under the foregoing shall be performed in a good, safe and workmanlike manner and shall minimize any impact on activities off the premises. The Lessee shall promptly provide to the Port Authority all copies of test results and reports generated in connection with such actions. Promptly upon completion of such investigation and remediation, the Lessee shall seal or cap all monitoring wells and test holes, remove all associated equipment and restore the remediated property.

Section 11. <u>Prohibited Acts</u>

(a) The Lessee shall commit no unlawful nuisance, waste or injury on the premises or at the Airport, and shall not do or permit to be done anything which may result in the creation or commission or maintenance of such nuisance, waste or injury on the premises.

(b) The Lessee shall not create nor permit to be caused or produced upon the premises, to permeate the same or to emanate therefrom any unusual, noxious or objectionable smokes, gases, vapors or odors except such as are necessarily incidental to the normal operations of the Lessee in the conduct of its operations granted under Section 3 of this Agreement.

(c) The Lessee shall not do or permit to be done anything which may interfere with the effectiveness or accessibility of the drainage and sewer system, water system, communications system, electrical system, fire protection system, sprinkler system, alarm

system, fire hydrants and hoses and other systems, if any, installed or located on, under, or in the premises.

(d) The Lessee shall not do or permit to be done any act or thing upon the premises or at the Airport (1) which will invalidate or prevent the issuance of or conflict with any fire insurance, extended coverage or rental insurance policies covering the premises or any part thereof, or the Airport, or any part thereof, or (2) which, in the opinion of the Port Authority, may constitute an extra-hazardous condition, so as to increase the risks normally attendant upon the operations contemplated by Section 3 hereof. The Lessee shall promptly observe, comply with and execute the provisions of any and all present and future rules and regulations, requirements, orders and directions of the Insurance Services Office of New Jersey, or of any other board or organization exercising or which may exercise similar functions, which may pertain or apply to the operations of the Lessee on the premises, and the Lessee shall, subject to and in accordance with the provisions of Section 6 hereof, make any and all structural and non-structural improvements, alterations or repairs of the premises that may be required at any time hereafter by any such present or future rule, regulation, requirement, order or direction. If by reason of any failure on the part of the Lessee to comply with the provisions of this paragraph any fire insurance rate, extended coverage or rental insurance rate on the premises or any part thereof, or on the Airport or any part thereof, shall at any time be higher than it would be if the premises were properly used for the purposes permitted by Section 3 hereof, then the Lessee shall pay to the Port Authority, as an item of additional rental, that part of all insurance premiums paid by the Port Authority which shall have been charged because of such violation or failure by the Lessee.

(e) The Lessee shall not dispose of nor permit any one to dispose of any waste material (whether liquid or solid) by means of toilets, manholes, sanitary sewers or storm sewers in the premises or on the Airport except after treatment in installations or equipment included in plans and specifications submitted to and approved by the Port Authority.

(f) Unless otherwise expressly permitted to do so, the Lessee shall not install, maintain or operate, or permit the installation, maintenance or operation on the premises of any vending-machine or device designed to dispense or sell food, beverages, tobacco, tobacco products or merchandise of any kind, whether or not included in the above categories, or of any restaurant, cafeteria, kitchen, stand or other establishment of any type for the preparation, or dispensing or sale of food, beverages, tobacco, tobacco products or merchandise of any kind, whether or not included in the above categories, or of any equipment or device for the furnishing to the public of service of any kind.

(g) The Port Authority by itself, or by contractors, lessees or permittees, shall have the exclusive right to install, maintain and receive the revenues from all coin-operated or other vending machines or devices installed by it and operated on the premises for the sale of merchandise of all types or for the rendering of services, provided, however, that no such machine or device shall be installed except upon the request of the Lessee. If the Port Authority does not install and maintain any such machine that the Lessee may request, the Lessee shall have the right to do so, provided, however, (1) that the Lessee shall pay or cause to be paid to the Port Authority each month for each machine upon the same basis for the preceding month as any

concessionaire, permittee or licensee of the Port Authority then operating machines at the Airport for the sale of similar merchandise or the rendering of similar services, and (2) that in the event the Lessee exercises such right the Port Authority, at any time thereafter, may substitute for the Lessee's machines other machines selling similar merchandise or services operated by the Port Authority or by its licensee, permittee or concessionaire, and thereupon the Lessee shall remove its machines.

(h) The Lessee shall not keep or store during any 24-hour period flammable liquids within any enclosed portion of the premises (other than in rooms or areas expressly constructed for the storage of such liquids) in excess of the Lessee's working requirements during the said 24-hour period. Any such liquids having a flash point of less than 110° Fahrenheit shall be kept and stored in safety containers of a type approved by the Underwriters Laboratories or the Factory Mutual Insurance Association.

(i) The Lessee shall not start or operate any engine or any item of automotive equipment in any enclosed space on the premises unless such space is adequately ventilated and unless such engine is equipped with a proper spark-arresting device which has been approved by the Port Authority.

(j) The Lessee shall not overload any floor and shall repair any floor, including supporting members, and any paved area damaged by overloading. Nothing in this paragraph (j) or elsewhere in this Agreement shall be or be construed to be a representation by the Port Authority of the weight any floor or paved area will bear.

(k) Except as provided in paragraph (h) hereof, the Lessee shall not keep or store in the premises, explosives, inflammable liquids or solids or oxidized materials or use any cleaning materials having a harmful corrosive effect, on any part of the premises.

(l) The Lessee shall not fuel or defuel any automotive vehicles or other equipment in the enclosed portions of the premises without prior approval of the General Manager of the Airport, provided, however, that the Lessee shall not be prohibited from using gasoline or other fuel in such enclosed portions where necessary in repairing or testing component parts, and in such event the Lessee shall take all precautions reasonably necessary to minimize the hazard created by such use.

(m) The Lessee shall not dispose of, release or discharge nor permit anyone to dispose of, release or discharge any Hazardous Substance on the premises or at the Airport. Any Hazardous Substance disposed of, released or discharged by the Lessee (or permitted by the Lessee to be disposed of, released or discharged) on the premises or at the Airport, shall upon notice by the Port Authority to the Lessee and subject to the provisions of Section 6 hereof, be completely removed and/or remediated by the Lessee. The obligations of the Lessee pursuant to this paragraph (m) shall survive the expiration or termination of this Agreement.

Section 12. Care, Maintenance, Rebuilding and Repair by the Lessee

(a) The Lessee shall repair, replace, rebuild and paint all or any part of the Airport which may be damaged or destroyed by the acts or omissions of the Lessee or by those of its employees, customers, guests or invitees or of other persons doing business with the Lessee.

(b) The Lessee shall, throughout the term of this Lease, assume the entire responsibility and shall relieve the Port Authority from all responsibility for all repair, rebuilding and maintenance whatsoever in the premises, whether such repair, rebuilding or maintenance be ordinary or extraordinary, partial or entire, inside or outside, foreseen or unforeseen, structural or otherwise, and without limiting the generality of the foregoing, the Lessee shall:

(1) Keep at all times in a clean and orderly condition and appearance, the premises and all the Lessee's fixtures, equipment and personal property which are located in any part of the premises which is open to or visible by the general public;

(2) Remove all snow and ice and perform all other activities and functions necessary or proper to make the premises available for use by the Lessee;

(3) Take good care of the premises and maintain the same at all times in good condition; perform all necessary preventive maintenance, including but not limited to painting (the exterior of the structures on the premises and areas visible to the general public to be painted only in colors which have been approved by the Port Authority); and make all repairs and replacements, and do all rebuilding, inside and outside, ordinary and extraordinary, structural or otherwise, which repairs, rebuilding and replacements by the Lessee shall be of good quality as to workmanship and material, and to pay promptly the cost and expense of such repairs, rebuilding replacements and maintenance.

(4) Without limiting its obligations elsewhere in this Section, the Lessee shall perform all decorating and painting (including redecorating and repainting) so that at all times the premises and all parts thereof are in first class appearance and condition;

(5) Provide and maintain all obstruction lights and similar devices, and provide and maintain all fire protection and safety equipment and all other equipment of every kind and nature required by any law, rule, ordinance, resolution or regulation of the type and nature described in Section 8 of this Agreement. The Lessee shall enter into and keep in effect throughout the term of the Lease a contract or contracts with a central station alarm company acceptable to the Port Authority to provide continuous and automatic surveillance of the fire protection system on the premises. The Lessee shall insure that all fire alarm signals with respect to the premises shall also be transmitted to the Airport's police emergency alarm board or to such other location on the Airport as the General Manager of the Airport may direct. The Lessee's obligations hereunder shall in no way create any obligation whatsoever on the part of the Port Authority;

(6) Take such anti-erosion measures and maintain the landscaping at all times in good condition, including but not limited to periodic planting, as the Port Authority may require, and perform and maintain such other landscaping with respect to all portions of the premises not paved or built upon as the Port Authority may require.

(7) Be responsible for the maintenance and repair of all service and utility lines, including but not limited to, service lines for the supply of water, compressed natural gas, electrical power and telephone conduits and lines, sanitary sewers and storm sewers located upon the premises or located adjacent to the premises and serving the premises leased to the Lessee or off the premises.

(8) Promptly wipe up all oil, gasoline, grease, lubricants and other flammable liquids or substances having a corrosive or detrimental effect on the paving or other surface of the premises, which may leak or be spilled thereon. Repair any damage to the paving or other surface of the premises caused by any oil, gasoline, grease, lubricants or other liquids and substances having a corrosive or detrimental effect thereon.

(9) From time to time and as often as reasonably required by the Port Authority, the Lessee shall conduct pressure, water flow, and other appropriate tests of the fire extinguishing system and apparatus which constitutes a part of the premises.

(c) In the event the Lessee fails to commence so to maintain, clean, repair, replace, rebuild or paint within a period of twenty (20) days after notice from the Port Authority so to do in the event that the said notice specifies that the required work to be accomplished by the Lessee includes maintenance and/or repair other than preventive maintenance; or within a period of one hundred eighty (180) days if the said notice specifies that the work to be accomplished by the Lessee involves preventive maintenance only, or fails diligently to continue to completion the repair, replacement, lamping and relamping, rebuilding or painting of all of the premises required to be repaired, replaced, rebuilt, restored or painted by the Lessee under the terms of this Agreement, the Port Authority may, at its option and in addition to any other remedies which may be available to it, clean, maintain, repair, replace, lamp or relamp, rebuild or paint or repaint or restore all or any part of the premises included in the said notice, and the cost thereof shall be payable to the Port Authority by the Lessee upon demand.

Section 13. <u>Insurance</u>

(a) The Lessee shall during the term of this Agreement, insure and keep insured to the extent of 100% of the replacement value thereof, all buildings, structures, improvements, installations, facilities and fixtures now or in the future located on the premises against such hazards and risks as may now or in the future be included under the Standard Form of Fire Insurance Policy of the State of New Jersey and also against damage or loss by windstorm, cyclone, tornado, hail, explosion, riot, civil commotion, aircraft, vehicles and smoke, under the Standard Form of Fire Insurance Policy of New Jersey and the form of extended coverage

endorsement prescribed as of the effective date of the said insurance by the Rating Organization having jurisdiction, and also covering nuclear property losses and contamination hazards and risks and boiler and machinery hazards and risks in a separate insurance policy or policies or as an additional coverage endorsement to the aforesaid policies in the form as may now or in the future be prescribed as of the effective date of said insurance by the Rating Organization having jurisdiction and/or the Superintendent of Insurance of the State of New Jersey and the Lessee shall furthermore provide additional insurance with respect to the premises covering any other property risk that the Port Authority may at any time during the term of this Agreement cover by carrier or self-insurance covered by appropriate reserves at other locations at the Airport upon written notice to the Lessee to such effect.

(b) The aforesaid insurance coverages and renewals thereof shall insure the Port Authority, the Lessee and the City of Newark, as their interests may appear, and shall provide that the loss, if any, shall be adjusted with and payable to the Port Authority.

(c) In the event the premises or any part thereof shall be damaged by any casualty against which insurance is carried pursuant to this Section 13, the Lessee shall promptly furnish to the Port Authority such information and data as may be necessary to enable the Port Authority to adjust the loss.

(d) The policies or certificates representing insurance covered by this Section 13 shall be delivered by the Lessee to the Port Authority upon execution of this Agreement by the Lessee and each policy or certificate delivered shall bear the endorsement of or be accompanied by evidence of payment of the premium thereon and, also, shall contain a valid provision obligating the insurance company to furnish the Port Authority and the City of New York ten (10) days' advance notice of the cancellation, termination, change or modification of the insurance evidenced by said policy or certificate. Renewal policies or certificates shall be delivered to the Port Authority at least ten (10) days before the expiration of the insurance which such policies are to renew.

(e) Regardless, however, of the persons whose interests are insured, the proceeds of all policies covered by this Section 13 shall be applied as provided in Section 14; and the word "insurance" and all other references to insurance in said Section 14 shall be construed to refer to the insurance which is the subject matter of this Section 13, and to refer to such insurance only.

(f) The insurance covered by this Section 13 shall be written by companies approved by the Port Authority. If at any time any of the insurance policies shall be or become unsatisfactory to the Port Authority as to form or substance or if any of the carriers issuing such policies shall be or become unsatisfactory to the Port Authority, the Lessee shall promptly obtain a new and satisfactory policy in replacement. If the Port Authority at any time so requests, a certified copy of each of said policies shall be delivered to the Port Authority.

Section 14. Damage to or Destruction of Premises

(a) Removal of Debris. If the premises, or any part thereof, shall be damaged by fire, the elements, the public enemy or other casualty, the Lessee shall promptly remove all debris resulting from such damage from the premises, and to the extent, if any, that the removal of debris under such circumstances is covered by insurance, the proceeds thereof shall be available to and be used by the Lessee for that purpose.

(b) Minor Damage. If the premises, or any part thereof shall be damaged by fire, the elements, the public enemy or other casualty but not rendered untenantable or unusable for a period of ninety (90) days, the premises shall be repaired with due diligence in accordance with the plans and specifications for the premises as they existed prior to such damage by and at the expense of the Lessee and if such damage is covered by insurance, the proceeds thereof shall be made available to and be used by the Lessee for that purpose.

(c) Major Damage to or Destruction of the Premises. If the premises, or any part thereof shall be destroyed or so damaged by fire, the elements, strikes, riots, civil commotion or other casualty as to be untenantable or unusable for ninety (90) days, or if within ninety (90) days after such damage or destruction the Lessee notifies the Port Authority in writing that in its opinion said premises will be untenantable or unusable for ninety (90) days then: The Lessee shall proceed with due diligence to make the necessary repairs or replacements to restore such premises in accordance with the plans and specifications for the premises as the same existed prior to such damage or destruction; or with the approval in writing of the Port Authority make such other repairs, replacements or changes as may be desired by the Lessee. If such destruction or damage was covered by insurance, the proceeds thereof shall be made available to and be used by the Lessee for such restoration.

(d) The obligation of the Lessee to repair or replace shall be limited to the amount of the insurance proceeds provided the Lessee has carried insurance to the extent and in accordance with Section 13 hereof. Any excess of the proceeds of insurance over costs of the restoration shall be retained by the Port Authority.

(e) The parties hereby stipulate that neither the provisions of Section 227 of the Real Property Law of New York nor those of any other similar statute shall extend or apply to this Agreement.

Section 15. Indemnity and Liability Insurance

(a) (1) The Lessee shall indemnify and hold harmless the Port Authority, its Commissioners, officers, employees and representatives, from and against (and shall reimburse the Port Authority for the Port Authority's costs and expenses including legal expenses incurred in connection with the defense of) all claims and demands third persons (including employees, officers and agents of the Port Authority including but not limited to claims and demands for

death or personal injuries, or for property damages, arising out of any default of the Lessee in performing or observing any term or provision of this Agreement, or out of the use or occupancy of the premises by the Lessee or by others, with its consent or out of any acts or omissions of the Lessee, its officers, employees, guests, representatives, customers, contractors, invitees, business visitors and other persons who are doing business with the Lessee or who are on the premises with the consent of the Lessee, or arising out of the acts or omissions of the Lessee, its officers and employees elsewhere at the Airport, including claims and demands of the City of Newark from which the Port Authority derives its rights in the Airport, for indemnification, arising by operation of law or through agreement of the Port Authority with the said City.

(2) If so directed, the Lessee shall at its own expense defend any suit based upon any such claim or demand (even if such claim or demand is groundless, false or fraudulent) and in handling such it shall not, without obtaining express advance permission from the General Counsel of the Port Authority, raise any defense involving in any way the jurisdiction of the tribunal, the immunity of the Port Authority, its Commissioners, officers, agents or employees, the governmental nature of the Port Authority, or the provisions of any statutes respecting suits against the Port Authority.

(b) In addition to the obligations set forth in paragraph (a) of this Section and all other insurance required under this Agreement, the Lessee prior to any use or occupancy of the premises (other than solely for purposes of the construction work) and thereafter during the term of this Agreement in its own name as insured and including the Port Authority and the City of Newark as additional insureds, shall maintain and pay the premiums during the term of this Agreement on a policy or policies of Comprehensive General Liability Insurance covering the Lessee's operations hereunder, including but not limited to Products Liability, premises-operations and completed operations, and covering bodily injury, including death and property damage liability, and Garage Liability (with automobile hazard 2 coverage), Garage Keepers Legal Liability, none of the foregoing to contain care, custody or control exclusions (endorsed to include all risks of physical loss and damage including lift collision coverage and collision and upset coverage in limits sufficient to cover vehicles and other property in the care, custody and control of the Lessee), and Comprehensive Automobile Liability Insurance covering owned, non-owned and hired vehicles, and including automatic coverage for newly-acquired vehicles, and all applicable requirements for underground storage tanks including the Federal Financial Responsibility Requirements in limits not less than $2,000,000 combined single limit per occurrence for bodily injury and property damage liability. Such policy or policies shall include Garage Liability (with automobile hazard two coverages, Garage Keepers Legal Liability in the comprehensive form to cover all risk, including, but not limited to (i) fire and explosion, (ii) theft of partial or entire vehicle, (iii) riot and/or vandalism, and (iv) coverage for collision or upset and Environmental Impairment Liability Insurance coverage covering the Lessee's legal liability, including clean up, in limits not less than $2,000,000 combined single limit per occurrence. The said policies of insurance shall also provide or contain a contractual liability endorsement covering the obligations assumed by the Lessee under paragraph (a) of this Section.

The Lessee shall also take out and maintain in its own name and at it own cost and expense:

(1) Comprehensive Automobile Liability Policy:

(aa) For bodily injury to or wrongful death of one person:	$2,000,000
(bb) For bodily injury to or wrongful death to more than one person in any one occurrence:	$2,000,000
(cc) Property Damage Liability	
For all damage arising out of injury to or destruction of property in any one occurrence:	$2,000,000

(2) Comprehensive Liability	Minimum Limit
(aa) Bodily Injury Liability	
For injury to or wrongful death to one person:	$2,000,000
For injury or wrongful death to more than one person in any one occurrence:	$2,000,000
(bb) Property Damage Liability For all damage arising out of injury to or destruction of property in any one occurrence:	$2,000,000
(cc) Products Liability/Completed Completed Operations:	$2,000,000

(3) Workers' Compensation Insurance

(4) Employers Liability Insurance in compliance with all applicable laws

Without limiting the provisions hereof, in the event the Lessee maintains the foregoing insurance in limits greater than aforesaid, the Port Authority shall be included therein as an additional insured to the full extent of all such insurance in accordance with all the terms and conditions hereof.

The said policy or policies or insurance shall also provide or contain an endorsement providing that the protections afforded the Lessee thereunder with respect to any claim or action against the Lessee by a third person shall pertain and apply with like effect with respect to any claim or action against the Lessee by the Port Authority, and shall also provide or contain an endorsement providing that the protections afforded the Port Authority hereunder and with respect to any claim or action against the Port Authority by the Lessee shall be the same as the protections afforded the Lessee thereunder with respect to any claim or action against the Lessee by a third person as if the Port Authority were the named insured thereunder, but such endorsement shall not limit, vary, change, or affect the protections afforded the Port Authority thereunder as an additional insured.

All insurance coverages and policies required under this Section may be reviewed by the Port Authority for adequacy of terms, conditions and limits of coverage at any time and from time to time during the term of the letting hereunder. The Port Authority may, at any such time, require additions, deletions, amendments or modifications to the above-scheduled insurance requirements, or may require such other and additional insurance, in such reasonable amounts, against such other insurable hazards, as the Port Authority may deem required and the Lessee shall promptly comply therewith.

(c) As to the insurance required by the provisions of this Section, a certified copy of each of the policies or a certificate or certificates evidencing the existence thereof, or binders, shall be delivered to the Port Authority upon execution of this Agreement by the Lessee. In the event any binder is delivered it shall be replaced within thirty (30) days by a certified copy of the policy or a certificate. Each such copy or certificate shall contain a valid provision or endorsement that the policy may not be cancelled, terminated, changed or modified without giving thirty (30) days' written advance notice thereof to the Port Authority. Each such copy or certificate shall contain an additional endorsement providing that the insurance carrier shall not, without obtaining express advance permission from the General Counsel of the Port Authority, raise any defense involving in any way the jurisdiction of the tribunal over the person of the Port Authority, the immunity of the Port Authority, its Commissioners officers, agents or employees, the governmental nature of the Port Authority or the provisions of any statutes respecting suits against the Port Authority. Any renewal policy shall be delivered to the Port Authority at least fifteen (15) days prior to the expiration of each expiring policy, except for any policy expiring after the date of expiration of the term of this Agreement. The aforesaid insurance shall be written by a company or companies approved by the Port Authority, the Port Authority agreeing not to withhold its approval unreasonably. If at any time any of the insurance policies shall be or become unsatisfactory to the Port Authority as to form or substance or if any of the carriers issuing such policies shall be or become unsatisfactory to the Port Authority, the Lessee shall promptly obtain a new and satisfactory policy in replacement. If the Port Authority at any time so requests, a certified copy of each of the policies shall be delivered to the Port Authority.

Section 16. <u>Signs</u>

(a) Except with the prior written approval of the Port Authority, the Lessee shall not erect, maintain or display any signs or any advertising at or on the exterior parts of the premises or in the premises so as to be visible from outside the premises or at or on any other

portion of the Airport outside the premises. Interior signs affecting public safety and security shall be in accordance with established Port Authority standards.

(b) Upon the expiration or termination of the letting, the Lessee shall remove, obliterate or paint out, as the Port Authority may direct, any and all signs and advertising on the premises or elsewhere on the Airport, and in connection therewith shall restore the portion of the premises and the Airport affected by such signs or advertising to the same condition as existing at the commencement of the letting. In the event of a failure on the part of the Lessee so to remove, obliterate or paint out each and every such sign or advertising and so to restore the premises and the Airport, the Port Authority may perform the necessary work and the Lessee shall pay the cost thereof to the Port Authority on demand.

Section 17. **Obstruction Lights**

The Lessee shall install, maintain and operate at its own expense such obstruction lights on the premises as the Federal Aviation Administration may direct or as the General Manager of the Airport may reasonably direct, and shall energize such lights daily for a period commencing thirty (30) minutes before sunset and ending thirty (30) minutes after sunrise (as sunset and sunrise may vary from day to day throughout the year) and for such other period as may be directed or requested by the Control Tower of the Airport.

Section 18. **Additional Rent and Charges**

(a) If the Port Authority has paid any sum or has incurred any obligation or expense which the Lessee has agreed to pay or reimburse the Port Authority for or if the Port Authority is required or elects to pay any sum or sums or incurs any obligations or expense by reason of the failure, neglect or refusal of the Lessee to perform or fulfill any one or more of the conditions, covenants or agreements contained in this Agreement or as a result of an act or omission of the Lessee contrary to the said conditions, covenants and agreements, the Lessee agrees to pay the sum or sums so paid or the expense so incurred, including all interest, costs, damages and penalties, and the same may be added to any installment of rent thereafter due hereunder, and each and every part of the same shall be and become additional rent, recoverable by the Port Authority in the same manner and with like remedies as if it were originally a part of the rent as set forth in Section 4 hereof.

(b) For all purposes under this Section and in any suit, action or proceeding of any kind between the parties hereto, any receipt showing payment of any sum or sums by the Port Authority for any work done or material furnished shall be prima facie evidence against the Lessee that the amount of such payment was necessary and reasonable. Should the Port Authority elect to use its operating and maintenance staff and/or its own materials in making any repairs, replacements, and/or alterations required of the Lessee under this Agreement and to charge the Lessee with the cost of same, any time report of any employee of the Port Authority

showing hours of labor or work allocated to any such repair, replacement and/or alteration, or any stock requisition of the Port Authority showing the issuance of materials for use in the performance thereof, shall likewise be prima facie evidence against the Lessee that the amount of such charge was necessary and reasonable.

Section 19. Rights of Entry Reserved

(a) The Port Authority, by its officers, employees, agents, representatives and contractors shall have the right at all reasonable times to enter upon the premises for the purpose of inspecting the same, for observing the performance by the Lessee of its obligations under this Agreement, and for the doing of any act or thing which the Port Authority may be obligated or have the right to do under this Agreement or otherwise.

(b) Without limiting the generality of the foregoing, the Port Authority, by its officers, employees, agents, representatives, and contractors, and by the employees, agents, representatives and contractors of any furnisher of utilities and other services, shall have the right, for its own benefit, for the benefit of the Lessee, or for the benefit of others than the Lessee at the Airport, to maintain existing and future utility, systems or portions thereof on the premises, including therein without limitation thereto, systems for the supply of heat, water, gas, fuel, electricity, and for the furnishing of fire-alarm, fire-protection, sprinkler, sewerage, drainage, telegraph and telephone service, including all lines, pipes, mains, wires, conduits and equipment connected with or appurtenant to such systems, and to enter upon the premises at all reasonable times to make such repairs, replacements or alterations as may, in the opinion of the Port Authority, be deemed necessary or advisable and, from time to time, to construct or install over, in or under the premises new systems or parts thereof, including lines, pipes, mains, wires, conduits and equipment, and to use the premises for access to other parts of the Airport otherwise not conveniently accessible, provided, however, that in the exercise of such rights of access, repair, alteration or new construction the Port Authority shall not unreasonably interfere with the use and occupancy of the premises by the Lessee.

(c) In the event that any property of the Lessee shall obstruct the access of the Port Authority, its employees, agents or contractors to any of the existing or future utility, mechanical, electrical or other systems and thus shall interfere with the inspection, maintenance or repair of any such system, the Lessee shall move such property, as directed by the Port Authority, in order that access may be had to the system or part thereof for its inspection, maintenance or repair, and, if the Lessee shall fail to so remove such property after direction from the Port Authority to do so, the Port Authority may move it and the Lessee hereby agrees to pay the cost of such moving upon demand.

(d) Nothing in this Section shall or shall be construed to impose upon the Port Authority any obligations so to construct or maintain or to make repairs, replacements, alterations or additions, or shall create any liability for any failure so to do. With respect to the premises, the Lessee is and shall be in exclusive control and possession thereof and the Port Authority shall not in any event be liable for any injury or damage to any property or to any person happening on or about said premises nor for any injury or damage to said premises nor to any property of the Lessee or for any other person located therein or thereon.

(e) At any time and from time to time during ordinary business hours within the six (6) months next preceding the expiration of the letting, the Port Authority, for and by its agents and employees, whether or not accompanied by prospective lessees, occupiers or users of the premises, shall have the right to enter thereon for the purpose of exhibiting and viewing all parts of the same; and during such six month period the Port Authority may place and maintain on the premises the usual "To Let" signs, which signs the Lessee shall permit to remain without molestation.

(f) If, during the last month of the letting, the Lessee shall have removed all or substantially all of its property from the premises, the Port Authority may immediately enter and alter, renovate and redecorate the premises.

(g) No abatement of rental shall be claimed by or allowed to the Lessee by reason of the exercise of any or all of the foregoing rights by the Port Authority or others.

Section 20. **Condemnation**

(a) Definitions:

As used in this Section, the phrase "temporary interest", when used with reference to real property, shall mean an interest in such real property entitling the owner of such interest to the possession of such property (whether or not such interest includes or is co-extensive with an interest of the Lessee therein under this Agreement), for an indefinite term or for a term terminable at will or at sufferance or for a term measured by a war or an emergency or other contingency or for a fixed term expiring prior to the expiration date of this Lease; and the phrase "permanent interest", when used with reference to real property, shall mean an interest in such real property entitling the owner of such interest to possession thereof, other than a temporary interest as above defined, including among others a fee simple and an interest for a term of years expiring on or after the expiration of this Agreement.

As used in this Section with reference to any premises leased to the Lessee for its exclusive use, the phrase "a material part" shall mean such a part of the said premises that the Lessee cannot continue to operate the premises for the purposes set forth or mentioned in Section 3 without using such part.

(b) Condemnation or Taking of a Permanent Interest in All or any Part of the premises.

Upon the acquisition by condemnation or the exercise of the power of eminent domain by anybody having a superior power of eminent domain of a permanent interest in all or any part of the premises (any such acquisition under this Section 20 being hereinafter referred to as a "taking"), the Port Authority shall purchase from the Lessee, and the Lessee shall sell to the Port Authority, the Lessee's leasehold interest (excluding any personal property whatsoever) in the premises, except that in the event of a taking of less than all of the said premises, the Port Authority shall purchase and the Lessee shall sell only so much of the Lessee's leasehold interest

in the premises as are taken. The sole and entire consideration to be paid by the Port Authority to the Lessee shall be an amount equal to the Unamortized Capital Investment (as defined in the Section of this Agreement entitled "Definitions"), if any, of the Lessee in the premises or, in the event of a permanent taking of less than all of the said premises, an amount equal to the Unamortized Capital Investment (as defined in the Section of this Agreement entitled "Definitions"), if any, of the Lessee in so much of the premises as are taken. However, the Port Authority shall purchase and the Lessee shall sell only if the consideration paid by the Port Authority therefor will constitute "unamortized Port Authority funds other than bond proceeds or Federal or State grants expended for capital improvements at the municipal air terminals", within the meaning of said phrase as used in Section 23, I, D of the Basic Lease or if an amount not less than such consideration can otherwise be retained by the Port Authority (and not be required to be paid to The City of Newark) out of the damages or award in respect to such taking without violation of any obligation of the Port Authority to The City of Newark under the Basic Lease. Such purchase and sale shall take effect as of the date upon which such body having superior power of eminent domain obtains possession of any such permanent interest in the premises and in that event, the Lessee (except with respect to its personal property), shall not have any claim or right to claim or be entitled to any portion of the amount which may be awarded as damages or paid as a result of such permanent taking, and all rights to damages, if any, of the Lessee (except for damages to its personal property) by reason thereof are hereby assigned to the Port Authority.

If, however, the amount to be paid by the Port Authority (the Unamortized Capital Investment as defined in the Section of this Agreement entitled "Definitions") if any, of the Lessee in the premises) for such leasehold interest will not constitute "unamortized Port Authority funds other than bond proceeds or Federal or State grants, expended for capital improvements at the municipal air terminals," within the meaning of said phrase as used in Section 23, I, D of the Basic Lease or if an amount not less than such consideration cannot otherwise be retained by the Port Authority (and not be required to be paid to the City of Newark) out of the damages or award in respect to such taking without violation of any obligation of the Port Authority to The City of New York under the Basic Lease, then the aforesaid agreement to purchase and sell said leasehold interest shall be null and void; and in any such event, the Lessee shall have the right to appear and file its claim for damages in the condemnation or eminent domain proceedings, to participate in any and all hearings, trials and appeals therein, and to receive such amount as it may lawfully be entitled to receive as damages or payment as a result of such taking, because of its leasehold interest in the premises up to but not in excess of an amount equal to the Unamortized Capital Investment (as defined the Section of this Agreement entitled "Definitions"), if any, of the Lessee in the premises. The Port Authority and the Lessee hereby agree that as full and final settlement of any sum that may be due as rent or otherwise for the balance of the term of this Lease, the Lessee will pay to the Port Authority the excess, if any, which the Lessee may be entitled to receive over the foregoing sum. If there be no excess, any sum that may be due as rent or otherwise for the balance of the term of this Lease shall abate.

In the event of the taking of all of the premises and if the Lessee has no Unamortized Capital Investment (as defined the Section of this Agreement entitled "Definitions") in the premises at the time of the taking, then the aforesaid agreement to purchase and sell said leasehold interest shall be null and void; and in that event, this Lease and all rights

granted by this Lease to the Lessee to use or occupy the premises for its exclusive use or for its use in common with others at the Airport and all rights, privileges, duties and obligations of the parties in connection therewith or arising thereunder shall terminate as of the date of the taking, and in that event, the Lessee (except with respect to its personal property) shall not have any claim or right to claim or be entitled to any portion of the amount which may be awarded as damages or paid as a result of such taking, and all rights to damages, if any, of the Lessee (except for damages to its personal property) by reason thereof are hereby assigned to the Port Authority.

In the event that the taking covers only a material part of the premises, then the Lessee and the Port Authority shall each have an option exercisable by notice given within ten (10) days after the effective date of such taking to terminate the letting hereunder with respect to the premises not taken, as of the date of such taking and such termination shall be effective as if the date of such taking were the original date of expiration hereof. If the Port Authority exercises this option, it shall purchase from the Lessee the Lessee's leasehold interest (excluding any personal property whatsoever) in the premises not taken for a consideration equal to the Unamortized Capital Investment (as defined the Section of this Agreement entitled "Definitions"), if any, of the Lessee in the premises not taken. If the letting of the entire premises is not terminated the settlement or abatement of rentals after the date possession is taken by the body having a superior power of eminent domain shall be in accordance with Section 4 hereof.

(c) Condemnation or Taking of a Temporary Interest in All or Any Part of the Premises.

Upon acquisition by condemnation or the exercise of the power of eminent domain by a body having a superior power of eminent domain of a temporary interest in all or any part of the premises, there shall be no abatement of any rental payable by the Lessee to the Port Authority under the provisions of this Agreement but the Lessee shall have the right to claim and in the event of an award therefor shall be entitled to retain the amount which may be awarded as damages or paid as a result of the condemnation or other taking of such temporary interest, provided, that the Lessee shall be obligated to pay over to the Port Authority all such payments as may be made to the Lessee as damages or in satisfaction of such claim, after deduction of (i) reasonable expenses incurred by the Lessee in the prosecution of such claim; (ii) an amount equal to the Unamortized Capital Investment (as defined the Section of this Agreement entitled "Definitions"), if any, of the Lessee in the premises or in the event of a taking of less than all of the said premises, an amount equal to such Unamortized Capital Investment in the premises as are taken, to the extent in either case that the same is to be amortized over the period of the taking; and (iii) the then present capitalized value of the Lessee's obligation for rentals thereafter payable during the period of the taking in respect to the demised premises, or, in the event of a taking of less than all of the said premises, in respect to the premises so taken.

In the event that the taking covers a material part but less than all of the demised premises, then the Lessee and the Port Authority shall each have an option, exercisable by notice given within ten (10) days after the effective date of such taking to suspend the term of the letting of such of the premises as are not so taken during the period of the taking, and, in that event, the rentals for such premises shall abate for the period of the suspension. If the Port

Authority exercises this option, it shall purchase from the Lessee the Lessee's leasehold interest (excluding any personal property whatsoever) in the premises not taken for the period of suspension for a consideration equal to the Unamortized Capital Investment (as defined in the Section of this Agreement entitled "Definitions"), if any, of the Lessee in such premises which is to be amortized over the period of such suspension.

Section 21. **Assignment and Sublease**

(a) The Lessee covenants and agrees that it will not sell, convey, transfer, mortgage, pledge or assign this Agreement or the letting or any part thereof, without the prior written consent of the Port Authority.

(b) The Lessee shall not sublet the premises or any part thereof, without the prior written consent of the Port Authority.

(c) If the Lessee assigns, sells, conveys, transfers, mortgages, pledges or sublets in violation of paragraphs (a) or (b) of this Section or if the premises are occupied by anybody other than the Lessee, the Port Authority may collect rent from any assignee, sublessee or anyone who claims a right under this Agreement or letting or who occupies the premises, and the Port Authority shall apply the net amount collected to the rental herein reserved; but no such collection shall be deemed a waiver by the Port Authority of the covenants contained in paragraphs (a) and (b) of this Section nor any acceptance by the Port Authority of any such assignee, sublessee, claimant or occupant as Lessee, nor a release of the Lessee by the Port Authority from the further performance by the Lessee of the covenants contained herein.

(d) The Lessee shall not use or permit any person to use the premises or any portion thereof for any purpose other than the purposes stated in Section 4 hereof.

Section 22. **Termination**

(a) If any one or more of the following events shall occur, that is to say:

(1) The Lessee shall become insolvent or shall take the benefit of any present or future insolvency statute, or shall make a general assignment for the benefit of creditors, or file a voluntary petition in bankruptcy or a petition or answer seeking an arrangement or its reorganization or the readjustment of its indebtedness under the federal bankruptcy laws or under any other law or statute of the United States or of any state thereof, or consent to the appointment of a receiver, trustee, or liquidator of all or substantially all of its property; or

(2) By order or decree of a court the Lessee shall be adjudged bankrupt or an order shall be made approving a petition filed by any of its creditors or, if the Lessee is a corporation, by any of the stockholders of the Lessee, seeking its

reorganization or the readjustment of its indebtedness under the federal bankruptcy laws or under any law or statute of the United States or of any state thereof; or

(3) A petition under any part of the federal bankruptcy laws or an action under any present or future insolvency law or statute shall be filed against the Lessee and shall not be dismissed within thirty (30) days after the filing thereof; or

(4) The letting hereunder or the interest or estate of the Lessee under this Agreement shall be transferred to, pass to or devolve upon, by operation of law or otherwise, any other person, firm or corporation; or

(5) The Lessee, if a corporation, shall, without the prior written approval of the Port Authority, become a possessor or merged corporation in a merger, a constituent corporation in a consolidation, or a corporation in dissolution; or

(6) By or pursuant to, or under authority of any legislative act, resolution or rule, or any order or decree of any court or governmental board, agency or officer having jurisdiction, a receiver, trustee, or liquidator shall take possession or control of all or substantially all of the property of the Lessee, and such possession or control shall continue in effect for a period of thirty (30) days; or

(7) The Lessee shall voluntarily abandon, desert or vacate the premises or discontinue its operations at the Airport; or after exhausting or abandoning any right of further appeal, the Lessee shall be prevented for a period of thirty (30) days by action of any governmental agency other than the Port Authority having any jurisdiction thereof, from conducting its operations at the Airport, regardless of the fault of the Lessee; or

(8) Any lien is filed against the premises because of any act or omission of the Lessee and shall not be discharged or fully bonded within thirty (30) days; or

(9) The Lessee shall fail duly and punctually to pay the rentals or to make any other payment required hereunder when due to the Port Authority; or

(10) The Lessee shall fail to keep, perform and observe each and every other promise, covenant and agreement set forth in this Agreement on its part to be kept, performed, or observed, within ten (10) days after receipt of notice of default thereunder from the Port Authority (except where fulfillment of its obligation requires activity over a period of time, and the Lessee shall have commenced to perform whatever may be required for fulfillment within ten (10) days after receipt of notice and continues such performance without interruption except for causes beyond its control);

(11) Any type of strike or other labor activity is directed against the operations of the Lessee at the Airport resulting in picketing or boycott for a period of at least forty-eight (48) hours which, in the opinion of the Port Authority, adversely affects or is likely adversely to affect the operation of the Airport or the operations of other

lessees or licensees thereat, whether or not the same is due to the fault of the Lessee, and whether caused by the employees of the Lessee or by others;

then upon the occurrence of any such event or at any time thereafter during the continuance thereof, the Port Authority may upon five (5) days' notice terminate the letting and the rights of the Lessee hereunder, such termination to be effective upon the date specified in such notice. Such right of termination and the exercise thereof shall be and operate as a conditional limitation.

(b) If any of the events enumerated in paragraph (a) of this Section shall occur prior to the letting, the Lessee shall not be entitled to enter into possession of the premises and the Port Authority upon the occurrence of any such event or at any time thereafter during the continuance thereof by twenty-four (24) hours' notice may cancel the interest of the Lessee under this Agreement, such cancellation to be effective upon the date specified in such notice.

(c) No acceptance by the Port Authority of rentals, fees, charges or other payments in whole or in part for any period or periods after a default of any of the terms, covenants and conditions hereof to be performed, kept or observed by the Lessee shall be deemed a waiver of any right on the part of the Port Authority to terminate the letting.

(d) No waiver by the Port Authority of any default on the part of the Lessee in performance of any of the terms, covenants or conditions hereof to be performed, kept or observed by the Lessee shall be or be construed to be a waiver by the Port Authority of any other or subsequent default in performance of any of the said terms, covenants and conditions.

(e) The rights of termination described above shall be in addition to any other rights of termination provided in this Agreement and in addition to any rights and remedies that the Port Authority would have at law or in equity consequent upon any breach of this Agreement by the Lessee, and the exercise by the Port Authority of any right of termination shall be without prejudice to any other such rights and remedies.

Section 23. **Right of Re-entry**

The Port Authority shall, as an additional remedy upon the giving of a notice of termination as provided in Section 22 hereof, have the right to re-enter the premises and every part thereof upon the effective date of termination without further notice of any kind, and may regain and resume possession either with or without the institution of summary or any other legal proceedings or otherwise. Such re-entry, or regaining or resumption of possession, however, shall not in any manner affect, alter or diminish any of the obligations of the Lessee under this Agreement, and shall in no event constitute an acceptance of surrender.

Section 24. **Waiver of Redemption**

The Lessee hereby waives any and all rights to recover or regain possession of the premises and all rights of redemption, granted by or under any present or future law arising in the

event it is evicted or dispossessed for any cause, or in the event the Port Authority obtains possession of the premises in any lawful manner.

Section 25. Survival of the Obligations of the Lessee

(a) In the event that the letting shall have been terminated in accordance with a notice of termination as provided in Section 22 hereof, or the interest of the Lessee cancelled pursuant thereto, or in the event that the Port Authority has re-entered, regained or resumed possession of the premises in accordance with the provisions of Section 23 hereof, all the obligations of the Lessee under this Agreement shall survive such termination or cancellation, or re-entry, regaining or resumption of possession and shall remain in full force and effect for the full term of the letting under this Agreement, and the amount or amounts of damages or deficiency shall become due and payable to the Port Authority to the same extent, at the same time or times and in the same manner as if no termination, cancellation, re-entry, regaining or resumption of possession had taken place. The Port Authority may maintain separate actions each month to recover the damage or deficiency then due or at its option and at any time may sue to recover the full deficiency less the proper discount, for the entire unexpired term.

(b) The amount of damages for the period of time subsequent to termination or cancellation (or re-entry, regaining or resumption of possession) on account of the Lessee's rental obligations, shall be the sum of the following:

(1) On account of the Lessee' basic rental obligation, the amount of the total of all annual basic rentals, less the installments thereof payable prior to the effective date of termination except that the credit to be allowed for the installment payable on the first day of the month in which the termination is effective shall be prorated for the part of the month the letting remains in effect, on the basis of a 30-day month;

(2) An amount equal to the percentage stated in paragraph (2)(a) of Subdivision A of Section 4 applied to the gross receipts of the Lessee, which gross receipts would have been received by the Lessee during the balance of the term if there had been no termination or cancellation (or re-entry, regaining, or resumption or possession); and for the purpose of calculation hereunder (i) the said amount of gross receipts shall be derived by multiplying the number of days in the balance of the term originally fixed by the daily average of the Lessee's gross receipts; (ii) the daily average of the Lessee's gross receipts shall be the Lessee's total actual gross receipts during that part of the effective period of the letting (in all monthly periods falling within the effective period) during which the premises were open and in operation and in which no abatement was in effect divided by the number of days included in such part of the effective period; (iii) the said amount of gallons of gasoline, motor oil, diesel fuel and alternative fuel shall be respectively derived by multiplying the number of days in the balance of the term originally fixed by the respective daily averages of the Lessee's sales and deliveries of gasoline, motor oil, diesel fuel and alternative fuel; and (iv) the daily averages of the Lessee's sales and deliveries of gasoline, motor oil, diesel fuel and

alternative fuel shall be the total actual amount of gasoline, motor oil, diesel fuel and alternative fuel of each type sold or delivered by the Lessee during that part of the effective period of the letting during which the premises were open and in operation and in which no abatement was in effect divided by the number of days included in such part of the effective period; and

(3) An amount equal to all expenses incurred by the Port Authority in connection with regaining possession and restoring and reletting the demised premises, for legal expenses, (including but not limited to the cost to the Port Authority of in-house legal services), putting the premises in order including without limitation, cleaning, decorating and restoring (on failure of the Lessee to restore), maintenance and brokerage fees.

(4) It is understood and agreed that the statement of damages under the preceding paragraph (b) shall not affect or be construed to affect the Port Authority's right to damages in the event of termination or cancellation (or re-entry, regaining or resumption of possession) where the Lessee has not received any actual gross receipts under this Agreement.

(c) In addition to and without limiting the foregoing or any other right, claim or remedy of the Port Authority, in the event this Lease shall be terminated pursuant to Section 22 hereof and the Lessee shall not have completed the construction work or any portion thereof within the time period specified in Section 6 hereof, the Lessee shall and hereby agrees to pay to the Port Authority any and all amounts, costs or expenses, of any type whatsoever, paid or incurred by the Port Authority by reason by reason of the failure of the Lessee so to complete the construction work, or any portion thereof, including all interest costs, damages, losses, and penalties, and all of the same shall be deemed treated as survived damages hereunder.

(d) Notwithstanding anything to the contrary herein contained, all of the obligations of the Lessee under this Lease with respect to Environmental Damages and Environmental Requirements shall survive the expiration or termination of this Agreement.

Section 26. **Reletting by the Port Authority**

The Port Authority upon termination or cancellation pursuant to Section 22 hereof, or upon any re-entry, regaining or resumption of possession pursuant to Section 23 hereof, may occupy the premises or may relet the premises, and shall have the right to permit any person, firm or corporation to enter upon the premises and use the same. Such reletting may be of part only of the premises or a part thereof together with other space, and for a period of time the same as or different from the balance of the term hereunder remaining, and on the terms and conditions the same as or different from those set forth in this Agreement. The Port Authority shall also, upon termination or cancellation pursuant to the said Section 22, or upon its re-entry, regaining or resumption of possession pursuant to the said Section 23, have the right to repair or to make structural or other changes in the premises, including changes which alter the character of the premises and the suitability thereof for the purposes of the Lessee under this Agreement,

without affecting, altering or diminishing the obligations of the Lessee hereunder. In the event either of any reletting or of any actual use and occupancy by the Port Authority (the mere right of the Port Authority to use and occupy not being sufficient however) there shall be credited to the account of the Lessee against its survived obligations hereunder any net amount remaining after deducting from the amount actually received from any lessee, licensee, permittee or other occupier in connection with the use of the said premises or portion thereof during the balance of the letting as the same is originally stated in this Agreement, or from the market value of the occupancy of such portion of the premises as the Port Authority may during such period actually use and occupy, all expenses, costs and disbursements incurred or paid by the Port Authority in connection therewith. No such reletting shall be or be construed to be an acceptance of a surrender.

Section 27. Remedies to be Non-Exclusive

All remedies provided in this Agreement shall be deemed cumulative and additional and not in lieu of or exclusive of each other or of any other remedy available to the Port Authority at law or in equity, and the exercise of any remedy, or the existence herein of other remedies or indemnities shall not prevent the exercise of any other remedy.

Section 28. Surrender

The Lessee covenants and agrees to yield and deliver peaceably to the Port Authority possession of the premises on the date of cessation of the letting, whether such cessation be by termination, expiration or otherwise, promptly and in good condition, except for reasonable wear and tear which does not cause or tend to cause deterioration of the premises or adversely affect the efficient or proper utilization thereof, and all of the premises shall be free and clear of all liens, encumbrances, and security interests of any type whatsoever.

Section 29. Acceptance of Surrender of Lease

No Agreement of surrender or to accept a surrender shall be valid unless and until the same shall have been reduced to writing and signed by the duly authorized representatives of the Port Authority and of the Lessee. Except as expressly provided in this Section, neither the doing of, nor any omission to do, any act or thing, by any of the officers, agents or employees of the Port Authority, shall be deemed an acceptance of a surrender of the letting or of this Agreement.

Section 30. Effect of Basic Lease

(a) Notwithstanding any other term, provision, covenant or condition of this Agreement, this Agreement and the letting hereunder shall, in any event, terminate with the termination or expiration of the Basic Lease with the City of Newark which covers the premises, such termination to be effective on such date and to have the same effect as if the term of the letting had on that date expired. The rights of the Port Authority in the premises are those

granted to it by the Basic Lease, and no greater rights are granted or intended to be granted to the Lessee than the Port Authority has power thereunder to grant.

(b) The Port Authority covenants that, during the term of this Agreement, the Port Authority will not take any action which would amount to or have the effect of cancelling, surrendering or terminating the Basic Lease prior to the date specified in the Basic Lease for its expiration insofar as such surrender, cancellation or termination would in any manner deprive the Lessee of any of its rights, licenses or privileges under this Agreement.

(c) Nothing herein contained shall prevent the Port Authority from entering into an agreement with the City of Newark pursuant to which the Basic Lease is surrendered, cancelled or terminated *provided* that the City of Newark, at the time of such agreement, assumes the obligations of the Port Authority under this Agreement.

(d) Nothing contained in this Agreement shall be deemed a waiver by the Lessee of any of its rights, licenses or privileges under this Agreement in the event that the Basic Lease should be surrendered, cancelled or terminated prior to the date specified in the Basic Lease for its expiration.

Section 31. **Removal of Property**

The Lessee shall have the right at any time during the letting to remove its equipment, inventories, removable fixtures and other personal property from the premises. If the Lessee shall fail to remove its property on or before the termination or expiration of the letting, the Port Authority may remove such property to a public warehouse for deposit or retain the same in its own possession, and sell the same at public auction, the proceeds of which shall be applied first to the expenses of removal, storage and sale; second to any sums owed by the Lessee to the Port Authority, with any balance remaining to be paid to the Lessee; if the expenses of such removal, storage and sale shall exceed the proceeds of sale, the Lessee shall pay such excess to the Port Authority upon demand.

Section 32. **Brokerage**

The Lessee represents and warrants that no broker has been concerned on its behalf in the negotiation of this Agreement and that there is no broker who is or may be entitled to be paid a commission in connection therewith. The Lessee shall indemnify and save harmless the Port Authority of and from any claim for commission or brokerage made by any and all persons, firms or corporations whatsoever for services rendered to the Lessee in connection with the negotiation and execution of this Agreement.

Section 33. **Limitation of Rights and Privileges Granted**

(a) No greater rights or privileges with respect to the use of the premises or any part thereof are granted or intended to be granted to the Lessee by this Agreement, or by any provision thereof, than the rights and privileges expressly and specifically granted hereby.

(b) The premises are let to the Lessee and the Lessee takes the same subject to all the following: (i) easements, restrictions, reservations, covenants and agreements, if any, to which the premises may be subject, rights of the public in and to any public street, (ii) rights, if any, of any enterprise, public or private which is engaged in furnishing heating, lighting, power, telegraph, telephone, steam, or transportation services and of the City of Newark and State of New Jersey; (iii) permits, licenses, regulations and restrictions, if any, of the United States, the City of Newark or State of New Jersey or other governmental authority.

Section 34. **Notices**

Except where expressly required or permitted herein to be oral, all notices, directions, requests, consents and approvals required to be given to or by either party shall be in writing, and all such notices and requests shall be personally delivered to the duly designated officer or representative of such party or delivered to the office of such officer or representative during regular business hours, or forwarded to him or to the party at such address by registered or certified mail. The Lessee shall designate an office within the Port of New York District and an officer or representative whose regular place of business is at such office. Until further notice, the Port Authority hereby designates its Executive Director, and the Lessee designates the person named on the first page hereof as their officers or representatives upon whom notices and requests may be served, and the Port Authority designates its office at 225 Park Avenue South, New York, New York 10003, and the Lessee designates its office at 366 North Broadway, Suite 206, Jericho, New York 11753 as their respective offices where notices and requests may be served. If mailed, the notices herein required to be served shall be deemed effective and served as of the date of the registered or certified mailing thereof.

Section 35. **Other Construction by the Lessee**

Except as expressly provided herein, the Lessee shall not erect any structures, make any improvements or do any other construction work on the premises or elsewhere on the Airport, or alter, modify or make additions or improvements or repairs to or replacements of any structure now existing or built at any time during the letting, or install or remove any fixtures (other than trade fixtures, removable without material damage to the freehold, any such damage to be immediately repaired by the Lessee) without the prior written approval of the Port Authority and in the event any construction, improvement, alteration, modification or addition, repair or replacement is made without such approval, then upon reasonable notice so to do, the Lessee will remove the same, or at the option of the Port Authority cause the same to be changed to the satisfaction of the Port Authority. In case of any failure on the part of the Lessee to comply with such notice, the Port Authority may effect the removal or change and the Lessee shall pay the cost thereof to the Port Authority.

Section 36. Place of Payments

All payments required of the Lessee by this Agreement shall be made by mail to The Port Authority of New York and New Jersey, P.O. Box 95000-1517, Philadelphia, Pennsylvania 19195-1517, or to such other office or address as may be substituted therefor.

Section 37. Additional Construction Work

(a) Without in anyway limiting the provisions of Section 6, the Lessee shall perform the work necessary to construct and install a dual bay car wash (one automated; one full service) and the alternative fuel component of the multi-fuel vehicle service station, all of the aforesaid construction work hereinafter being referred to as the "Additional Work". Promptly after execution of this Agreement, and strictly in accordance with the provisions of Section 6 hereof, the Lessee shall submit to the Port Authority for its approval a Construction Application in the form supplied by the Port Authority setting forth in detail and by appropriate plans and specifications the construction and installation work the Lessee proposes to perform to install and construct the dual bay car wash (one automated; one full service) and alternative fuel component. The Lessee hereby represents that upon the completion of the said Additional Work, the dual bay car wash (one automated; one full service and the alternative fuel component will be suitable for its operations hereunder. The Lessee shall do all preventive maintenance and make all repairs, replacements and rebuilding necessary to keep the same in the condition it was in when made or installed except for reasonable wear and tear. The Lessee shall operate the dual bay car wash (one automated; one full service) and alternative fuel component in accordance with all of the terms, covenants and provisions contained in this Agreement and shall comply with all applicable governmental laws, ordinances, enactments, resolutions, rules, regulations and orders in connection therewith. The Port Authority shall have no obligations or liabilities in connection with the operation or maintenance of the dual bay car wash (one automated; one full service) and alternative fuel component by the Lessee.

(b) Title to the Additional Work shall vest in the Port Authority when the same is installed in the premises and the Lessee shall execute such necessary documents confirming the same as the Port Authority may require.

Section 38. Construction and Application of Terms

(a) The Section and paragraph headings, if any in this Agreement, are inserted only as a matter of convenience and for reference and in no way define, limit or describe the scope or intent of any provision hereof.

(b) Unless otherwise expressly specified, the terms, provisions and obligations contained in the Exhibit(s) attached hereto, whether there set out in full or as amendments of, or supplements to provisions elsewhere in the Agreement stated, shall have the same force and effect as if herein set forth in full.

(c) If any clause, provision or section of this Agreement shall be ruled invalid by any court of competent jurisdiction, the invalidity of such clause, provision or section or sections shall not affect any of the remaining clauses, provisions or sections hereof.

Section 39. Non-liability of Individuals

Neither the Commissioners of the Port Authority nor any of them, nor any officer, agent or employee thereof, shall be charged personally by the Lessee with any liability or held liable to it under any term or provision of this Agreement or of any supplement, modification or amendment to this Agreement or because of its execution or attempted execution, or because of any breach or alleged breach thereof.

Section 40. Non-Discrimination

(a) Without limiting the generality of any of the provisions of the Agreement, the Lessee, for itself, its successors in interest, and assigns, as a part of the consideration hereof, does hereby covenant and agree as a covenant running with the land that (1) no person on the grounds of race, creed, color, sex or national origin shall be excluded from participation in, denied the benefits of, or be otherwise subjected to discrimination in the use of the premises, (2) that in the construction of any improvements, on, over, or under the premises and the furnishing of services thereon by it, no person on the ground of race, creed, sex, color, or national origin shall be excluded from participation in, denied the benefits of, or otherwise be subjected to discrimination, (3) that the Lessee shall use the premises in compliance with all other requirements imposed by or pursuant to Title 49, Code of Federal Regulations, Department of Transportation, Subtitle A, Office of the Secretary, Part 21, Nondiscrimination in Federally-assisted programs of the Department of Transportation-Effectuation of Title VI of the Civil Rights Act of 1964, and as said Regulations may be amended, and any other present or future laws, rules, regulations, orders or directions of the United States of America with respect thereto which from time to time may be applicable to the Lessee's operations at the Airport, whether by reason of agreement between the Port Authority and the United States Government or otherwise.

(b) The Lessee shall include the provisions of paragraph (a) of this Section in every agreement or concession it may make pursuant to which any person or persons, other than the Lessee, operates any facility at the Airport providing services to the public and shall also include therein a provision granting the Port Authority a right to take such action as the United States may direct to enforce such covenant.

(c) The Lessee's non-compliance with the provisions of this Section shall constitute a material breach of this Agreement. In the event of the breach by the Lessee of any of the above non-discrimination provisions the Port Authority may take any appropriate action to enforce compliance; or in the event such non-compliance shall continue for a period of twenty (20) days after receipt of written notice from the Port Authority, the Port Authority shall have the right to terminate the Agreement and the letting hereunder with the same force and effect as a

termination under the Section of this Agreement providing for termination for default by the Lessee in the performance or observance of any other term or provision of this Agreement, or may pursue such other remedies as may be provided by law; and as to any or all of the foregoing, the Port Authority may take such action as the United States may direct.

(d) The Lessee shall indemnify and hold harmless the Port Authority from any claims and demands of third persons including the United States of America resulting from the Lessee's non-compliance with any of the provisions of this Section and the Lessee shall reimburse the Port Authority for any loss or expense incurred by reason of such non-compliance.

(e) Nothing contained in this Section shall grant or shall be deemed to grant to the Lessee the right to transfer or assign this Agreement, to make any agreement or concession of the type mentioned in paragraph (b) hereof, or any right to perform any construction on the premises.

Section 41. **Affirmative Action**

The Lessee assures that it has and will continue to undertake an affirmative action program as required by 14 CFR Part 152, Subpart E, to insure that no person on the grounds of race, creed, color, national origin, or sex be excluded from participating in any employment activities covered in 14 CFR Part 152, Subpart E. The Lessee assures that no person shall be excluded on these grounds from participating in or receiving the services or benefits of any program or activity covered by this subpart. The Lessee assures that it will require that its covered suborganizations provide assurances to the Lessee that they similarly will undertake affirmative action programs and that they will require assurances from their suborganizations, as required by 14 CFR Part 152, Subpart E, to the same effect.

Section 42. **The Lessee's Additional Ongoing Affirmative Action - Equal Opportunity Commitment**

(a) In addition to and without limiting any other term or provision of this Agreement, the Lessee, in connection with its use and occupancy of the premises and any and all of its activities and operations at or affecting the premises or the Airport, shall not discriminate against employees or applicants for employment because of race, creed, color, national origin, sex, age, disability or marital status, and shall undertake or continue existing programs of affirmative action to ensure that minority group persons and women are afforded equal employment opportunity without discrimination. Such programs shall include, but not be limited to, recruitment, employment, job assignment, promotion, upgrading, demotion, transfer, layoff, termination, rates of pay or other forms of compensation, and selections for training or retraining, including apprenticeship and on-the-job training.

(b) In addition to and without limiting the foregoing, and without limiting the provisions of Sections 6 (c), 40 and 41 and Schedule E hereof, it is hereby agreed that the Lessee in connection with its continuing operation, maintenance and repair of the premises, or any

portion thereof, as provided in this Agreement, and in connection with every award or agreement for concessions or consumer services at the Airport, shall throughout the term of the letting hereunder commit itself to and use good faith efforts to implement an extensive program of affirmative action, including specific affirmative action steps to be taken by the Lessee, to ensure maximum opportunities for employment and contracting by minorities and women, and by Minority Business Enterprises and Women-owned Business Enterprises. In meeting the said commitment the Lessee agrees to submit to the Port Authority for its review and approval the Lessee's said extensive affirmative action program, including the specific affirmative action steps to be taken by the Lessee to meet its aforesaid commitment, within one hundred eighty (180) days after the execution of this Agreement. The Lessee shall incorporate in its said program such revisions and changes which the Port Authority initially or from time to time may reasonably require. The Lessee throughout the term of the letting hereunder shall document its efforts in implementing the said program, shall keep the Port Authority fully advised of the Lessee's progress in implementing the said program and shall supply to the Port Authority such information, data and documentation with respect thereto as the Port Authority may from time to time and at any time request, including but not limited to annual reports.

(c) (1) "Minority" as used herein shall have the meaning as defined in Paragraph 11(c) of Part I of Schedule E.

(2) "Minority Business Enterprise" (MBE) as used herein shall have the meaning as defined in the first paragraph of Part II of Schedule E.

(3) "Women-owned Business Enterprise" (WBE) as used herein shall have the meaning as defined in the first paragraph of Part II of Schedule E.

(4) Good faith efforts to include meaningful participation by MBEs and WBEs shall include at least the following:

(i) Dividing the work to be subcontracted into smaller portions where feasible.

(ii) Actively and affirmatively soliciting bids for subcontracts from MBEs and WBEs, including circulation of solicitations to minority and female contractor associations. The Lessee shall maintain records detailing the efforts made to provide for meaningful MBE and WBE participation as called for in paragraph (b) above, including the names and addresses of all MBEs and WBEs contacted and, if any such MBE or WBE is not selected as a joint venturer or subcontractor, the reason for such decision.

(iii) Making plans and specifications for prospective work available to MBEs and WBEs in sufficient time for review.

(iv) Utilizing the list of eligible MBEs and WBEs maintained by the Port Authority or seeking minorities and women from other sources for the purpose of soliciting bids for subcontractors.

(v) Encouraging the formation of joint ventures, partnerships or other similar arrangements among subcontractors, where appropriate, to insure that the Lessee will meet its obligations hereunder.

(vi) Insuring that provision is made to provide progress payments to MBEs and WBEs on a timely basis.

(vii) Submitting quarterly reports to the Port Authority (Office of Business and Job Opportunity) detailing its compliance with the provisions hereof.

(d) The Lessee's non-compliance with the provisions of this Section shall constitute a material breach of this Agreement. In the event of the breach by the Lessee of any of the above provisions the Port Authority may take any appropriate action to enforce compliance; or in the event such non-compliance shall continue for a period of twenty (20) days after receipt of written notice from the Port Authority, the Port Authority shall have the right to terminate this Agreement and the letting hereunder with the same force and effect as a termination under the Section of this Agreement providing for termination for default by the Lessee in the performance or observance of any other term or provision of this Agreement, or may pursue such other remedies as may be provided by law.

(e) In the implementation of this Section, the Port Authority may consider compliance by the Lessee with the provisions of any federal, state or local law concerning affirmative action-equal employment opportunity which are at least equal to the requirements of this Section, as effectuating the provisions of this Section. If the Port Authority determines that by virtue of such compliance with the provisions of any such federal, state or local law that the provisions hereof duplicate or conflict with such law the Port Authority may waive the applicability of the provisions of this Section to the extent that such duplication or conflict exists.

(f) Nothing herein provided shall be construed as a limitation upon the application of any laws which establish different standards of compliance or upon the application of requirements for the hiring of local or other area residents.

(g) Nothing in this Section shall grant or be deemed to grant to the Lessee the right to make any agreement or award for concessions or consumer services at the Airport.

Section 43. <u>Quiet Enjoyment</u>

The Port Authority covenants and agrees that as long as it remains the lessee of the Airport, the Lessee, upon paying all rentals hereunder and performing all the covenants, conditions and provisions of this Agreement on its part to be performed, shall and may peacefully and quietly have and enjoy the premises free of any act or acts of the Port Authority except as expressly permitted in this Agreement.

Section 44. Infringement

The Lessee represents that it is the owner of or fully authorized to use any and all services, processes, machines, articles, marks, names or slogans used by it in its operations under or in any wise connected with this Agreement. The Lessee agrees to save and hold the Port Authority, its Commissioners, officers, employees, agents and representatives free and harmless of and from any loss, liability, expense, suit or claim for damages in connection with any actual or alleged infringement of any patent, trademark or copyright, or arising from any alleged or actual unfair competition or other similar claim arising out of the operations of the Lessee under or in any wise connected with this Agreement.

Section 45. Late Charges

If the Lessee should fail to pay any amount required under this Agreement when due to the Port Authority, including without limitation any payment of basic, percentage, variable or other rental or any payment of utility, or other charges or fees or if any such amount is found to be due as the result of an audit, then, in such event, the Port Authority may impose (by statement, bill or otherwise) a late charge with respect to each such unpaid amount for each late charge period (hereinbelow described) during the entirety of which such amount remains unpaid, each such late charge not to exceed an amount equal to eight-tenths of one percent of such unpaid amount for each late charge period. There shall be twenty-four late charge periods during each calendar year; each late charge period shall be for a period of at least fifteen (15) calendar days except one late charge period each calendar year may be for a period of less than fifteen (but not less than thirteen) calendar days. Without limiting the generality of the foregoing, late charge periods in the case of amounts found to have been owing to the Port Authority as the result of Port Authority audit findings shall consist of each late charge period following the date the unpaid amount should have been paid under this Agreement. Each late charge shall be payable immediately upon demand made at any time therefor by the Port Authority. No acceptance by the Port Authority of payment of any unpaid amount or of any unpaid late charge amount shall be deemed a waiver of the right of the Port Authority to payment of any late charge or late charges payable under the provisions of this Section with respect to such unpaid amount. Each late charge shall be recoverable by the Port Authority in the same manner and with like remedies as if it were originally a part of the rental as set forth in the section of this Agreement entitled "Rental". Nothing in this Section is intended to, or shall be deemed to, affect, alter, modify or diminish in any way (i) any rights of the Port Authority under this Agreement, including without limitation the Port Authority's rights set forth in the section of this Agreement entitled "Termination" or (ii) any obligations of the Lessee under this Agreement. In the event that any late charge imposed pursuant to this Section shall exceed a legal maximum applicable to such late charge, then, in such event, each such late charge payable under this Agreement shall be payable instead at such legal maximum.

Section 46. Obligations In Connection with the Percentage/Variable Rental

The Lessee shall:

(a) Use its best efforts in every proper manner to maintain, develop and increase the business conducted by it hereunder;

(b) Not divert or cause to be diverted, any business from the Airport;

(c) Maintain in accordance with accepted accounting practice during the letting and for one (1) year thereafter and for such further period until the Lessee shall receive written permission from the Port Authority to do otherwise, records and books of account, recording all transactions at, through or in any wise connected with the automobile service station, including but not limited to records of all gasoline, diesel fuel, compressed natural gas and other fuel tank meter readings, all of which records and books of account shall be kept at all times within the Port of New York District;

(d) Permit in ordinary business hours during the letting and for one year thereafter, the examination and audit by the officers, employees, agents and representatives of the Port Authority of such records and books of account;

(e) Permit in ordinary business hours, the inspection by the officers, employees and representatives of the Port Authority of any equipment used by the Lessee, including but not limited to cash registers, tape readings and meter readings;

(f) Furnish to the Port Authority on or before the 20th day of the month following the month in which the Rental Payment Start Date occurs and on or before the twentieth (20th) day of each and every calendar month thereafter including the month following the expiration of the Lease, a statement, sworn to by a responsible executive or fiscal officer of the Lessee, of all gross receipts arising out of the operations of the Lessee hereunder for the preceding month and specifying and applying the percentage stated in paragraphs (3)(a) (i) and (v) of Subdivision A of Section 4 and showing furthermore the total amount of all gallons of gasoline, motor oil, diesel fuel and alternative fuel sold or delivered during the preceding month.

(g) Install and use such cash registers, sales slips, invoicing machines or any other equipment or devices for recording orders taken or services rendered as may be appropriate to the Lessee's business and necessary or desirable to keep accurate records of gross receipts and sales and deliveries of gasoline, motor oil, diesel fuel and compressed natural gas.

(h) In the event that upon conducting an examination and audit as described in paragraph (d) of this Section the Port Authority determines that unpaid amounts are due to the Port Authority by the Lessee, the Lessee shall be obligated, and hereby agrees, to pay to the Port Authority a service charge in the amount of five percent (5%) of each amount determined by the Port Authority audit findings to be unpaid. Each such service charge shall be payable

immediately upon demand (by notice, bill or otherwise) made at any time therefor by the Port Authority. Such service charge (s) shall be exclusive of, and in addition to, any and all other moneys or amounts due to the Port Authority by the Lessee under this Lease or otherwise. No acceptance by the Port Authority of payment of any unpaid amount or of any unpaid service charge shall be deemed a waiver of the right of the Port Authority to payment of any late charge(s) or other service charge(s) payable under the provisions of this Section with respect to such unpaid amount. Each such service charge shall be and become additional rental, recoverable by the Port Authority in the same manner and with like remedies as if it were originally a part of the rental to be paid hereunder. Nothing in this Section is intended to, or shall be deemed to, affect, alter, modify or diminish in any way (i) any rights of the Port Authority under this Lease, including, without limitation, the Port Authority's rights to terminate this Lease or (ii) any obligations of the Lessee under this Lease.

Section 47. Towing and Emergency Services to be performed by the Lessee

(a) In connection with the letting hereunder, the Lessee shall have the privilege to operate and shall be obligated to operate an automobile towing service which shall consist of the following:

(1) A service consisting of (i) towing disabled automotive vehicles to the premises at the request of the owner or operator of such vehicle and/or (ii) providing emergency repairs to said disabled vehicles at the place where the vehicle is disabled, if possible, and/or (iii) short term storage thereof at the premises said service for purposes of this Lease being herein called "the Patron service".

(2) A service consisting of towing at the request of the Port Authority abandoned or disabled automotive vehicles on the Airport or vehicles parked in violation of the Port Authority's Rules and Regulation to the location on the Airport specified by the Port Authority (including the premises) and short term storage thereof at the premises, said service being herein called "the Emergency Service"; all of the foregoing services set forth in subdivisions (a)(1) and (a)(2) being sometimes hereinafter called "the Facility Service".

(b) The Lessee shall use such roads, routes, ways and other areas at the Airport as may from time to time be designated by the General Manager of the Airport for use in connection with the Facility Service to be provided by the Lessee hereunder.

(c) The vehicle to be used by the Lessee in furnishing the Facility Service shall be two (2) radio equipped tow trucks capable of lifting and towing passenger automobiles, minivans, vans, light pick-up trucks and limousines the foregoing vehicles being herein called "the tow trucks". The tow trucks shall be painted in such colors, shall bear such inscriptions and signs on the inside and outside thereof and shall have such lights as the Port Authority shall from time to time and at any time prescribe, the Port Authority agreeing that if there are any colors that the Lessee uses in its operations generally, said colors may be used. The Lessee agrees that the tow trucks shall be of a type and shall be so adapted, constructed and equipped as to properly

fulfill the requirements of the Facility Service. Without limiting the foregoing the tow trucks shall contain such automotive equipment as is appropriate or necessary for performing emergency repairs to disabled vehicles and for performing a safe and proper towing operation including towing operations in those enclosed portions of the Facility having eight foot ceilings. In addition the tow trucks shall carry two-way radio equipment tuned to a frequency which would enable it to maintain contact with the radio equipment required to be maintained pursuant to paragraph (h) of this Section 47 and such communication shall be maintained at all times. The tow truck shall be registered under New Jersey State law and shall be approved by the Port Authority prior to its use in the Facility Service.

The Port Authority shall have the right at any time and as often as it may consider it necessary to inspect the tow trucks, all other equipment to be furnished or used by the Lessee and any activities or operations of the Lessee hereunder. Upon request of the Port Authority, the Lessee shall operate or demonstrate the tow trucks' equipment or the equipment owned by or in the possession of the Lessee on the Airport or to be placed or brought on the Airport, and shall demonstrate any activity being carried on by the Lessee hereunder. Upon notification by the Port Authority of any deficiency in the tow trucks or other item of equipment, the Lessee shall promptly make good the deficiency or withdraw the truck or trucks or item of equipment from service, and provide a truck or trucks or other item of equipment of substantially the same capacity and type as the one removed.

(d) In the event the tow trucks shall for any reason other than as set forth in paragraph (c) above be removed from service hereunder, the Lessee shall promptly provide in lieu thereof a vehicle or vehicles which meet all the requirements of this Section. The Lessee shall at all times keep the tow trucks and all other equipment used in the Facility Service clean and in first-class order, maintenance, repair and appearance.

(e) The Lessee shall use the tow trucks and its automotive equipment exclusively in and only in the Facility Service at the Airport. The Lessee hereby agrees to have a sufficient number of drivers actually on duty and actually working so that at all times the Lessee will provide a timely, proper and first-class Facility Service on a 24 hour basis. The Lessee understands that the Port Authority expects that the tow trucks shall under normal conditions respond to a call for the Patron Service no later than ten (10) minutes after the request for the same has been made and the Lessee agrees to comply therewith. In the event that in the Port Authority's opinion the Lessee has failed to provide a timely Patron Service then and in such event and in addition to any other right or remedy available to the Port Authority at law or in equity, the Port Authority may elect to present the Lessee with schedules to be maintained by the Lessee for the operation of the Patron Service and the Lessee hereby agrees to have the number of drivers set forth in said schedules actually on duty and actually working at all times (without interruption for any cause) as set forth in said schedules. The Lessee further agrees that if the schedules initially presented to it by the Port Authority prove insufficient (except during emergencies) and do not provide a timely Patron Service, the Port Authority shall have the right to amend said schedules, including not only an increase in the number of drivers and trucks to be on duty and operated at any one time but also an increase in the total number of tow trucks, but the Port Authority shall not have the right to require more than two (2) additional tow trucks or a total of four (4) tow trucks available to provide the Facility Service at any one time.

It is hereby understood by the Lessee that the requirements under this paragraph (e) for the operation of the Patron Service shall not affect or release the Lessee from its obligation to at all times keep the premises manned and operated by sufficient personnel.

(f) At all times that the premises are open to the public, the Lessee shall maintain a supervisory official at the premises with full authority to direct and control all employees of the Lessee at the Airport performing the Facility Service and who shall be available for consultation with the General Manager of the Airport or his representative on all details of the operation of the Lessee hereunder. Said supervisor shall at all times be in direct contact with the Lessee's personnel by radio and phone.

(g) The Lessee shall make only fair and reasonable charges for the emergency repairs provided under subparagraph (a)(i) of this Section. Separate charges for towing (all vehicles to be towed to the premises as expeditiously as possible) shall be made in accordance with the schedule of rates and charges which are set forth in Schedule X annexed hereto and hereby made a part hereof. The Lessee's schedule of rates and charges for emergency repairs provided under subparagraph (a)(i) of this Section shall be submitted to and be subject to the prior and continuing written approval of the Port Authority. The Port Authority shall examine such schedules of rates and charges and make such modifications therein as it may deem necessary. Any changes thereinafter in the schedules of rates and charges shall be similarly submitted to the Port Authority for its prior written approval, and if necessary, modification. Copies of such schedules shall be made available to the public by the Lessee, if so directed by the Port Authority from time to time and at any time, at locations designated from time to time and at any time by the Port Authority. In addition, the schedules of rates and charges shall be posted in the tow trucks and at the premises. The Lessee agrees to adhere to the rates and charges stated in the aforesaid schedules.

(h) During all times that the premises are open to the public the tow trucks shall be stationed at the premises and there shall also be located and operated on the premises radio equipment permitting the Lessee to maintain radio communication service with the tow trucks. The Lessee shall also have radio equipment permitting the Lessee to maintain radio communication service with the tow trucks on a seven (7) day a week, twenty-four (24) hours a day basis. The Lessee shall maintain telephone service at the premises and at such other location off the Airport where the radio equipment may be located, the telephone number of which is to be displayed on the tow trucks in accordance with paragraph (c) hereof as one which the public may call for the Patron Service.

(i) With respect to the Patron Service, upon receipt of a call therefor, the Lessee will dispatch a tow truck to the location at the Airport of the disabled vehicle. If the Lessee can do so, it will make emergency repairs to the disabled vehicle but only if the Port Authority shall from time to time permit repairs to be made at the location where said disabled vehicle may be and only if said emergency repairs will take no longer than such period of time as the Port Authority shall from time to time upon notice to the Lessee permit. The Lessee shall clean up any oil, grease or other refuse at the area of the repairs and remove the same therefrom. If emergency repairs as aforesaid cannot be so made, the Lessee shall tow said disabled vehicle to

the premises and perform the necessary repairs there but only to the extent that such repairs may be performed at the premises under the provisions of the Lease covering the use of the premises. If the Lessee at the time of its response to the call for the Patron Service determines that the required repairs cannot be performed by the Lessee at the premises, it shall advise the patron to such effect and shall advise the patron further that the patron may call another towing service to remove the car from the Airport. In such event, the Lessee shall be entitled only to the charge for providing emergency repairs. If the patron requests, the Lessee may tow said vehicle to the premises from which place the patron may arrange for further towing service. Lessee understands that the Facility Service is to be performed exclusively on the Airport and that the tow trucks will not go off the Airport.

(j) (1) At the oral direction of the General Manager or his authorized representative, the Lessee will promptly provide to the Port Authority the Emergency Service by providing the tow trucks for use in an emergency. An emergency as used hereunder shall mean any situation at the Airport which the General Manager or his authorized representative determines to be an emergency. The Port Authority may have a police officer or other representative in the tow truck or trucks and the Lessee shall require its drivers to comply with the directions of said Port Authority representatives. The Lessee agrees that the Port Authority may use the tow trucks 24 hours a day and for such number of consecutive days as the Port Authority may require. The Lessee agrees that it shall have at all times drivers available to operate and who shall operate the tow trucks to be used in the Emergency Service. The Lessee also agrees that it shall have a sufficient number of drivers available so that rested drivers will be available at all times and so that no driver would be required to work more than a period of 12 consecutive hours. During the Emergency Service, the Port Authority shall have the right to use the radio equipment therein. In addition, the Port Authority shall pay to the Lessee for each tow truck actually engaged in the Emergency Service at the rate of $20.00 Dollars and No Cents per vehicle. No other charges shall be made to the Port Authority and the Lessee shall bear the entire cost of the tow trucks and the drivers, including but not limited to fuel, oil, insurance and repairs.

(2) With respect to the Emergency Service, upon receipt of a call from the Port Authority's Police Desk at the Airport or from the Airport Operations Office at the Airport or from such other office as may from time to time be designated by notice from the Port Authority, the Lessee will dispatch the tow truck to the location at the Airport as directed by the Port Authority in its call. The Lessee will pick up the vehicle designated by the Port Authority to be picked up but only if a police officer or other representative of the Port Authority is present and the Lessee shall require its drivers to comply with the directions of said Port Authority representatives. The Lessee shall tow said vehicle to a Port Authority location, if the Port Authority representative so requires, or otherwise to the premises. If the vehicle is towed to the premises, the Lessee shall keep and store said vehicle therein until the same is delivered to "an authorized person", as hereinafter defined, or to the Port Authority, as hereinafter provided, in the presence of and as directed by a police officer or other Port Authority representative. When the Lessee picks up and tows away a vehicle, and when the Lessee surrenders up a vehicle to an authorized person or to the Port Authority, it shall execute and deliver to the Port Authority's police officer or other representative thereat a form reflecting the action taken. The Lessee hereby acknowledges and agrees that all forms executed by the driver of the tow truck or any

other personnel of the Lessee, its sublessee or operator shall be deemed duly executed and authorized on behalf of the Lessee and the Lessee shall be bound thereby. The Port Authority shall deliver to the Lessee an acknowledgment of authority to release said vehicle to the authorized person.

(3) The Lessee shall upon request of the Port Authority from time to time, or periodically, deliver to the Port Authority's Police Desk at the Airport and to the Airport Operations Office at the Airport a written statement signed by an authorized employee of the Lessee setting forth the vehicles which are as of the date of the statement in the possession of the Lessee at the premises with the appropriate location and identity of each vehicle and the period of time each such vehicle has been stored. The Lessee shall have no obligation to store any vehicle at the premises under the Emergency Service for a period greater ten (10) days.

(4) "Authorized person" as used hereunder shall mean the person who received authority from a Police Desk officer of the Port Authority at the Airport, or his designated representative, and to whom said officer delivers a form executed by said desk officer authorizing said person to receive his vehicle. The Lessee shall require said authorized person to execute a form acknowledging receipt of said car, a true copy of which shall be supplied to the Port Authority.

(5) At the direction of the Port Authority the Lessee shall deliver any vehicle stored at the premises to such location on the Airport as the Port Authority shall from time to time specify. The Port Authority shall deliver to the Lessee at such time a form acknowledging receipt of such vehicle.

(6) The Port Authority hereby agrees to pay to the Lessee the Uncollected Emergency Service Amount which shall mean the sum of: (i) the charge for picking up and towing any vehicle to a Port Authority location as directed by the Port Authority representative pursuant to subparagraph (j)(i) hereof; and (ii) the charge for picking up and towing to the premises as directed by the Port Authority pursuant to subparagraph (j)(i) hereof, and the storage charges therefor, if any, which charges as of the time that the Port Authority directs the Lessee to deliver said vehicle to the Port Authority pursuant to subparagraph (5) hereof are unpaid or which charges the authorized person refused to pay to the Lessee and the Port Authority nevertheless directs that the car be released to such person. The charges shall be as set forth in Schedule X annexed hereto and shall be paid monthly.

(k) The Lessee shall procure all licenses, certificates, permits, franchises or other authorization from all governmental authorities, if any, having jurisdiction over the operations of the Lessee, which may be necessary for the conduct of its operation of the Facility Service. Neither the execution of this Agreement nor anything contained herein shall be construed to be a grant of any franchise, consent, license, permit, right or privilege of any nature or kind whatsoever to operate tow trucks or any other vehicles outside the Airport or over the public streets or roads in any County of the State of New Jersey. The Lessee shall promptly observe, comply with and execute the provisions of any and all present and future governmental laws, rules, regulations, requirements, orders and directions which may pertain or apply to the Facility Service. The Lessee's obligations to comply with governmental requirements are

provided herein for the purpose of assuring proper safeguards for the protection of persons and property at the Airport, and are not to be construed as a submission by the Port Authority to the application to itself of such requirements or any of them.

(l) If any type of strike, boycott, picketing, work stoppage, slowdown or other labor activity is directed against the Lessee at the Airport or against any operations with respect to the Facility Service, whether or not the same is due to the fault of the Lessee and whether or not caused by the employees of the Lessee, and if any of the foregoing, in the opinion of the Port Authority, adversely affects or is likely adversely to affect the operation of the Airport, or the operations of other permittees, lessees or licensees thereat, or the operations of the Lessee of the Facility Service, the Port Authority shall have the right at any time during the continuance thereof by twenty-four (24) hours notice to suspend the operation by the Lessee of the Facility Service, and during the period of the said suspension the Lessee shall not conduct said Service at the Airport. The foregoing shall not limit, affect or be deemed to limit or affect any other right of the Port Authority resulting from a cessation of operations by the Lessee whether granted hereunder or otherwise.

(m) All the terms, covenants, conditions and provisions of the Lease, shall pertain and apply with like effect to the operation by the Lessee of the Facility Service, except those which are by their very nature inapplicable to the Facility Service and except as to those which are covered by express provisions of this Section.

(n) In addition to all other obligations hereunder and without limiting the same, the Lessee agrees that the Towing Service will be a first-class operation and the Lessee will furnish all fixtures, equipment, personnel (including licensed personnel as necessary), supplies, materials and other facilities and replacements necessary or proper therefor including but not limited to a dolly or other equipment necessary to tow vehicles having locked wheels.

(o) Nothing contained in this Section shall grant or be deemed to grant to the Lessee an exclusive right to operate the Facility Service or any component service thereof.

(p) In addition to all other rights hereunder and without limiting the Lessee's obligations hereunder, the Port Authority shall have the right to revoke without cause, and upon thirty (30) days' prior written notice to the Lessee the privilege and obligation of the Lessee to provide the Emergency Service, and from and after the effective date of said notice the Lessee shall no longer provide the Emergency Service but the privilege and obligation hereunder to provide the Patron Service and other terms and provisions of the Lease, as amended hereunder, shall continue in full force and effect.

(q) The Lessee shall at the time of rendering each statement required of the Lessee in Sections 4 and 46 hereof submit a further written statement setting forth its computation of the amount due to the Lessee from the Port Authority for the preceding calendar month if any, for the Emergency Service in accordance with paragraph (j) hereof. Said statement shall contain such itemization and information as to the amounts due to the Lessee as the Port Authority shall from time to time request. The Lessee may deduct from the payments to be made by the Lessee pursuant to Section 4 hereof the amount due to the Lessee from the Port Authority

as computed by the Lessee in such statement. However, it is hereby expressed and agreed that no such statement by the Lessee and no such deduction by it of the amount set forth therein shall be or be deemed to have been conclusively determined until the amount has been audited and verified by the Port Authority. Moreover, until such audit and verification, the Lessee hereby agrees to promptly remit to the Port Authority, upon written demand, all or such portion of the amount so deducted which the Port Authority contends is in excess of the proper amount to be deducted.

(r) The Lessee shall comply with all directions given from time to time by the General Manager of the Airport or his designated representative in connection with the Facility Service as herein provided.

(s) The Lessee hereby assumes complete and sole responsibility for all loss or damage to any vehicles including any personal property contained therein which the Lessee tows, repairs or stores under the Facility Service. The Lessee shall indemnify and hold harmless the Port Authority, its Commissioners, officers, agents, representatives and employees from and against all claims and demands of third persons (including but not limited to the owners of the vehicles) just or unjust, for personal injuries, (including death) or property damages including the theft, destruction or loss of the vehicles and any personal property contained therein (except claims or demands arising out of the affirmative acts of the Port Authority, its employees, agents or representatives), arising or alleged to arise out of the operation by the Lessee of the Facility Service. If so directed by the Port Authority, the Lessee shall, at its own expense, defend against such claims and demands, in which event it shall not without obtaining express advance written permission from the General Counsel of the Port Authority, raise any defense involving in any way the jurisdiction of the tribunal over the person of the Port Authority, the immunity of the Port Authority, its Commissioners, officers, agents or employees, the governmental nature of the Port Authority, or the provision of any statutes respecting suits against the Port Authority.

(t) This Section shall not constitute the Lessee, or any sublessee or operator performing the Facility Service the agent or representative of the Port Authority. The Lessee shall perform the Facility Service as an independent contractor and its officers and employees and the officers and employees of any sublessee or operator shall not be or be deemed to be agents, servants or employees of the Port Authority.

(u) The Lessee shall not assign or transfer its privilege and obligation to provide the Facility Service and any such assignment or transfer shall be void and of no effect as to the Port Authority.

Section 48. <u>Sales and Services by the Lessee</u>

(a) A principal purpose of the Port Authority in entering into this Agreement is to have available for passengers, travelers and other users of the Airport, all other members of the public, and persons employed at the Airport, the merchandise and/or services which the Lessee is obligated to sell and/or render hereunder, all for the better accommodation,

convenience and welfare of such individuals and in fulfillment of the Port Authority's obligation to operate the Airport for the use and benefit of the public. Consistent with the provisions of Section 3 and Section 47 of the Lease, the Lessee shall conduct, at the premises, a first-class operation and will furnish and install all fixtures, equipment, personnel (including licensed personnel as necessary), supplies, materials, and other facilities and replacements necessary or proper therefor. The Lessee shall sell first-class items of merchandise including a full line of automotive accessory items, such as batteries and tires, including medium and economy priced lines of dependable and serviceable quality. All prices and charges shall be subject to the prior written approval of the Port Authority, and prior to the furnishing of any services or sale of any merchandise hereunder the Lessee shall prepare and submit or cause to be prepared and submitted to the Port Authority schedules of rates and prices and any discounts therefrom for all services and merchandise, which shall not exceed reasonable prices for similar merchandise and/or services sold in the area immediately surrounding the Airport. Any changes thereafter in the schedules shall be similarly submitted to the Port Authority for its prior written approval. All such schedules shall be made available to the public, including but not limited to, prominent display at the premises at locations therein as may be designated from time to time by the Port Authority. The Lessee agrees to adhere to the rates, charges and discounts, if any, stated in the approved schedules. If the Lessee applies any rate in excess of the approved rates or extends a discount less than an approved discount, the amount by which the charge based on such actual rate or actual discount deviates from a charge based on the approved rates and/or discounts shall constitute an overcharge which will, upon demand of the Port Authority or a customer, be promptly refunded to the customer. Notwithstanding any repayment of overcharges to a customer, any such overcharge or undercharge shall constitute a breach of the Lessee's obligations hereunder and the Port Authority shall have all remedies consequent upon breach which would otherwise be available to it at law, in equity or by reason of this Lease.

(b) The Lessee shall furnish upon the request of any patron or customer, without charge, a receipt for any sale or service rendered at the premises or at the Airport.

(c) The Lessee shall not enter into any agreement or understanding, express or implied, binding or non-binding, with any other person who may furnish services at the Airport similar to those furnished hereunder which will have the effect of (1) fixing rates and charges to be paid by users of the services; (2) lessening or preventing competition between the Lessee and such other furnishers of services; or (3) tending to create a monopoly on the Airport in connection with the furnishing of such services. In order that the Port Authority may enforce the Lessee's obligations hereunder, the Lessee shall before entering into any agreement or understanding, express or implied, binding or non-binding, with any person who may furnish services at the Airport similar to those furnished hereunder, notify the Port Authority of all the details thereof, furnishing a copy of the proposed agreement if the same has been reduced to writing or a memorandum of the same, if oral, and similarly shall notify the Port Authority at the time of any change in or extension of an existing agreement. Such proposed agreements or understandings or changes or extensions of existing ones shall be subject to the approval of the Port Authority and unless approved, shall not be entered into by the Lessee.

(d) The Lessee shall be open for and conduct business at the premises seven (7) days a week, twenty-four (24) hours a day. The Port Authority's determination of proper business hours, as evidenced from time to time by notice to the Lessee, shall control.

(e) The Lessee shall make available to the public restroom facilities maintained in a manner acceptable to the Port Authority.

(f) The Lessee shall have on the premises at all times an employee able to communicate effectively in the English language so as to perform the services set forth in Sections 3 and 47 hereof.

Section 49. Postponement

If the Port Authority shall not give possession of the premises or any part thereof on the date fixed in Section 2 hereof for the commencement of the letting hereunder by reason of the fact that the premises or any part thereof are in the course of construction, repair, alteration or improvement or by reason of the fact that the occupant thereof failed or refused to deliver possession to the Port Authority, or by reason of any cause or condition beyond the control of the Port Authority, the Port Authority shall not be subject to any liability for the failure to give possession on said date. No such failure to give possession on the date of commencement of the letting as set forth in Section 2 hereof shall in any wise affect the validity of this Agreement or the obligations of the Lessee hereunder, nor shall the same be construed in any wise to extend the term of the letting as set forth therein beyond the expiration date. However, until possession of the premises or any part thereof is tendered by the Port Authority to the Lessee, the effective date of the letting of the premises or any part thereof shall be made by notice given at least five (5) days prior to the effective date of the tender and in the event that such notice of tender is not given for possession to commence on or before one hundred eighty (180) days after the date stated in Section 2 hereof for commencement of the letting of the premises hereunder then this Agreement shall be deemed cancelled, except that each party shall and does hereby release the other party of and from any and all claims or demands based on this Agreement, or a breach or alleged breach thereof.

Section 50. Services

The Port Authority shall not be obligated to perform or furnish any services or utilities whatsoever in connection with this Lease or the use and occupancy of the premises hereunder nor to police the same or keep the same free from snow, ice or otherwise unobstructed and available for use by the Lessee.

Section 51. Utility Lines

The Port Authority, shall, if and to the extent required, bring appropriate roadway access stubs and service lines for the supply of cold water, electric power, telephone (limited to four telephone conduits) and sanitary and storm sewers (said service lines and sanitary and storm sewers being hereinafter collectively referred to as "utility service lines") to such locations, at the perimeter of the site or to other locations off the site as the Port Authority shall determine. The Lessee at its sole cost and expense is hereby obligated to tie its utility lines and roadways into such locations at or near the perimeter of the site where such utility service lines and roadway access stubs will be brought by the Port Authority hereunder. The Port Authority shall have no obligation to make available any utility service lines or roadway access stubs to any location with respect to the premises prior to receiving the certificate of the Lessee and of the Lessee's architect or engineer that all of the construction work has been completed or that a portion of the construction work is properly usable, all as provided in paragraph (h) of Section 6 hereof, and that the Lessee is ready to tie its utility lines and roadways into the utility service lines and roadway access stubs to be furnished by the Port Authority to the premises.

Section 52. **Relationship of the Parties**

This Agreement does not constitute the Lessee, the agent or representative of the Port Authority for any purpose whatsoever. Neither a partnership nor any joint adventure is hereby created, notwithstanding the fact that all or a portion of the rental to be paid hereunder may be determined by gross receipts from the operations of the Lessee hereunder.

Section 53. **Definitions**

The following terms, when used in this Agreement, shall, unless the context shall require otherwise, have the respective meanings given below:

(a) "Airport" or "Facility" shall mean the land and premises in The City of Newark, in the County of Essex and State of New Jersey, which are westerly of the right of way of the Central Railroad of New Jersey and are shown upon the exhibit attached to the said agreement between the City of Newark and the Port Authority referred to in paragraph (b) below, said exhibit being marked "Exhibit A", as contained within the limits of a line of crosses appearing on said exhibit and designated "Boundary of Terminal Area in City of Newark, and the lands contiguous thereto which may have been heretofore or may hereafter be acquired by the Port Authority to use for air terminal purposes.

(b) "Basic Lease" shall mean the agreement between the City of Newark and the Port Authority dated October 22, 1947, as the same from time to time may have been or may be supplemented or amended. Said agreement dated October 22, has been recorded in the Office of the Register of Deeds for the County of Essex, on October 30, 1947, in Book E-110 of Deeds at pages 242 et seq., as the same from time to time may have been or may be supplemented and amended.

(c) "Agreement" shall mean this agreement of lease.

(d) "Lease" shall mean this agreement of lease.

(e) "Letting" shall mean the letting under this Agreement for the original term stated herein, and shall include any extension thereof.

(f) "Premises shall mean and include the land, the buildings, structures and other improvements located or to be located or to be constructed therein or thereon, the equipment permanently affixed or permanently located therein, such as electrical, plumbing, sprinkler, fire protection and fire alarm, heating, steam, sewerage, drainage, refrigeration, communications, gas and other systems, and their pipes, wires, mains, lines, tubes, conduits, equipment and fixtures and all paving, drains, culverts, ditches and catch-basins.

(g) "Manager of the Airport" or "General Manager of the Airport" shall mean the person or persons from time to time designated by the Port Authority to exercise the powers and functions vested in the General Manager by this Agreement; but until further notice from the Port Authority to the Lessee it shall mean the General Manager (or the temporary or acting General Manager) of the Airport for the time being, or his duly designated representative or representatives.

(h) "Unamortized Capital Investment" shall mean for purposes of this Lease, the amount of the Lessee's investment in the premises arising out of the performance by the Lessee of the construction work pursuant to and set forth in Section 2 of this Lease with respect to the multi-fuel vehicle service station after deduction therefrom of an amount equivalent to an allowance for depreciation and amortization. Such allowance will be computed on a straight-line basis over a period commencing on the Completion Date, as established pursuant to Section 6 (f)(2) hereof to and including the day immediately prior to the twentieth (20th) anniversary of the Completion Date.

The foregoing computation to be made shall not take into consideration the effect of accelerated amortization, if any, granted to or taken by the Lessee on its books or otherwise under the provisions of Section 168(a) of Title 26 USCA or similar legislation hereafter enacted.

For purposes of this paragraph (h) the Lessee's investment in the premises shall be equal to the sum of: (1) the amounts paid by the Lessee to independent contractors for work actually performed and labor and materials actually furnished in connection with the construction of the station set forth in and pursuant to Section 6 of the Lease; and (2) the payments made and expenses incurred by the Lessee, in connection with such construction, for engineering, architectural, professional and consulting services and the supervision of construction, provided, however, that such payments and expenses pursuant to this item (2) shall not exceed ten percent (10%) of the amounts described in item (1); in each case, as the above-mentioned amounts, payments and expenses are evidenced, from time to time, by certificates of a responsible fiscal officer of the Lessee, sworn to before a Notary Public and delivered to the Port Authority, which certificates shall (i) set forth, in reasonable detail, the amounts paid to specified

independent contractors, the payments made to other specified persons and the other expenses incurred by the Lessee, which have not previously been reported in certificates delivered to the Port Authority, (ii) have attached thereto reproduction copies or duplicate originals of the invoices of such independent contractors and other persons acknowledging the receipt by them of such amounts and payments, and (iii) certify that the amounts, payments and expenses therein set forth constitute portions of the Lessee's investment in the premises for the purposes of this Lease.

(i) "Governmental Authority", "governmental board", and "governmental agency" shall mean federal, state, municipal and other governmental authorities, boards and agencies of any state, nation or government, except that it shall not be construed to include The Port Authority of New York and New Jersey, the lessor under this lease.

(j). "Person" shall mean not only a natural person, corporation or other legal entity, but also two or more natural persons, corporations or other legal entities acting jointly as a *firm, partnership, unincorporated association, consortium, joint adventurers or otherwise.*

(k) "Environmental Damages" shall mean any one or more of the following: (i) the presence on, about or under the premises of any Hazardous Substance and/or (ii) the disposal, release or threatened release of any Hazardous Substance from the premises, and/or (iii) the presence of any Hazardous Substance on, about or under other property at the Airport as a result of the Lessee's use and occupancy of the premises or a migration of a Hazardous Substance from the premises, and/or (iv) any personal injury (including wrongful death) or property damage arising out of or related to any such Hazardous Substance, and/or (v) the violation of any Environmental Requirements pertaining to any such Hazardous Substance, the premises and/or the activities thereon.

(l) "Environmental Requirements" and "Environmental Requirement" shall mean all applicable present and future laws, statutes, enactments, resolutions, regulations, rules, ordinances, codes, licenses, permits, orders, approvals, plans, authorizations, concessions, franchises, requirements and similar items, of all governmental agencies, departments, commissions, boards, bureaus, or instrumentalities of the United States, states and political subdivisions thereof and all applicable judicial, administrative, and regulatory decrees, judgments, and orders relating to the protection of human health or the environment, and in the event that there shall be more than one compliance standard, the standard for any of the foregoing to be that which requires the lowest level of a Hazardous Substance, the foregoing to include without limitation:

(i) All requirements pertaining to reporting, licensing, permitting, investigation, and remediation of emissions, discharges, releases, or threatened releases of Hazardous *Substances into the air, surface water, groundwater, or land,* or relating to the manufacture, processing, distribution, use, treatment, storage, disposal, transport, or handling of Hazardous Substances; and

(ii) All requirements, pertaining to the protection of the health and safety of employees or the public.

(m) "Hazardous Substance" and "Hazardous Substances" shall mean and include without limitation any pollutant, contaminant, toxic or hazardous waste, dangerous substance, potentially dangerous substance, noxious substance, toxic substance, flammable, explosive, radioactive material, urea formaldehyde foam insulation, asbestos, polychlorinated biphenyls (PCBs), chemicals known to cause cancer or reproductive toxicity, petroleum and petroleum products and other substances which has or in the future shall be declared to be hazardous or toxic, or the removal of which has or in the future shall be required, or the manufacture, preparation, production, generation, use, maintenance, treatment, storage, transfer, handling or ownership of which has or in the future shall be restricted, prohibited, regulated or penalized by any Environmental Requirement.

Section 54. Storage Tanks

(a) All storage tanks, if any, installed in the premises as of the Commencement Date as defined in Section 2 hereof, together with all storage tanks installed in the premises during the term of the letting subsequent to the Commencement Date and its or their appurtenances, pipes, lines, fixtures and other related equipment are hereinafter collectively called the "Storage Tanks" and singularly called a "Storage Tank". The Lessee hereby agrees that title and ownership of the Storage Tanks shall be and remain in the Lessee, notwithstanding anything to the contrary in the Lease or any construction or alteration application. The Port Authority has made no representations or warranties with respect to the Storage Tanks or their location and shall assume no responsibility for the Storage Tanks. All Storage Tanks installed subsequent to said Commencement Date shall be installed pursuant to the terms and conditions of the Lease including without limitation Section 6 thereof and nothing in this Section shall or shall be deemed to be permission or authorization to install any Storage Tanks.

(b) Without limiting the generality of any of the provisions of the Lease, the Lessee agrees that it shall be solely responsible for maintaining, testing and repairing the Storage Tanks. The Lessee shall not perform any servicing, repairs or non-routine maintenance to the Storage Tanks without the prior written approval of the Port Authority.

(c) It is hereby agreed that title to and ownership of the Storage Tanks shall remain in the Lessee until the earlier to occur of (1) receipt by the Lessee of notice from the Port Authority that title to the Storage Tanks shall vest in the Port Authority or in the City of Newark or (2) receipt by the Lessee of notice from the Port Authority that the Port Authority waives its right to require the Lessee to remove the Storage Tanks from the premises as set forth in paragraph (i) below. The vesting of title to the Storage Tanks in the Port Authority or in the City of Newark, if at all, in accordance with the foregoing item (1) shall in no event relieve the Lessee from the obligation to remove the Storage Tanks from and restore the premises in accordance with paragraph (i) below.

(d) Without limiting the generality of any other term or provision of the Lease, the Lessee shall, at its cost and expense, comply with all Environmental Requirements pertaining to the Storage Tanks and any presence, pumping, pouring, venting, emitting, emptying, leakage, deposit, spill, discharge or other release of Hazardous Substances from the Storage Tanks or in connection with their use, operation, maintenance, testing or repair (any such presence, pumping, pouring, venting, emitting, emptying, leakage, deposit, spill, discharge or other release during the period the Lessee shall use or occupy the premises or use the Storage Tanks being hereinafter called a "Discharge") including without limitation registering and testing the Storage Tanks, submitting all required clean-up plans, bonds and other financial assurances, performing all required clean-up and remediation of a Discharge and filing all reports, making all submissions to, providing all information required by, and complying with all requirements of, all governmental authorities pursuant to the Environmental Requirements.

Nothing in the foregoing shall be construed as a submission by the Port Authority to the application to itself of the Environmental Requirements, *provided*, however, no immunity or exemption of the Port Authority from the Environmental Requirements shall excuse the compliance therewith by the Lessee or shall be grounds for non-compliance therewith by the Lessee.

(e) Without limiting the terms and provisions of Section 15 of the Lease, the Lessee hereby assumes all risks arising out of or in connection with the Storage Tanks and all Discharges whether or not foreseen or unforeseen and shall indemnify and hold harmless the Port Authority, its Commissioners, officers, agents and employees from and against (and shall reimburse the Port Authority for their costs and expenses including without limitation penalties, fines, liabilities, settlements, damages, attorney and consultant fees, investigation and laboratory fees, clean-up and remediation costs, court costs and litigation expenses), all claims and demands, just or unjust, of third persons (such claims and demands being hereinafter in this Section referred to as "Claims" and singularly referred to as a "Claim") including but not limited to those for personal injuries (including death), property damages, or environmental impairment, arising or alleged to arise out of or in any way related to, the failure of the Lessee to comply with each and every term and provision of the Lease, or the Storage Tanks, or any Discharge, or any lawsuit brought or threatened, settlement reached or any governmental order relating to the Storage Tanks or a Discharge, or any violation or any Environmental Requirements or demands of any governmental authority based upon or in any way related to the Storage Tanks or a Discharge, and whether such arise out of the acts or omissions of the Lessee or of customers or contractors of the Lessee or of third persons or out of the acts of God or the public enemy or otherwise including claims by the City of Newark against the Port Authority pursuant to the provisions of the Basic Lease (as defined in the Lease) whereby the Port Authority has agreed to indemnify the City against claims. It is understood the foregoing indemnity shall cover all claims, demands, penalties, settlements, damages, fines, costs and expenses of or imposed by any governmental Authority under the Environmental Requirements.

If so directed the Lessee shall at its expense defend any suit based upon any such Claim (even if such Claim is groundless, false or fraudulent) and in handling such it shall not without first having express advance permission from the General Counsel of the Port Authority raise any defense involving in any way the jurisdiction of the tribunal over the person of the Port

Authority, the immunity of the Port Authority, its Commissioners, officers, agents or employees, the governmental nature of the Port Authority or the provisions of any statutes respecting suits against the Port Authority.

(f) The Lessee's obligations under this Section shall survive the expiration or earlier termination of the Lease.

(g) In addition to the requirements of Section 8 of the Lease and paragraph (d) hereof, the Port Authority shall have the right upon notice to the Lessee to direct the Lessee, at the Lessee's sole cost and expense, (i) to perform such reasonable testing of the Storage Tanks as the Port Authority shall direct and to perform such testing of the soil, subsoil and ground water of the premises and of such surrounding areas as the Port Authority shall direct, and (ii) to clean-up and remediate any Discharge, regardless of whether any Environmental Requirement or governmental authority shall require such testing, clean-up or remediation, which testing, clean-up and remediation shall be performed pursuant to an alteration application prepared by the Lessee and submitted to the Port Authority for the Port Authority's approval.

(h) In the Lessee's use and operation of the Storage Tank, the Lessee shall not permit any Hazardous Substance from entering the ground including without limitation (subject to Section 6 hereof) installing appropriate spill and overfill devices and placing an impervious material, such as asphalt or concrete, over the ground area above and in the vicinity of the Storage Tanks.

(i) (1) The Lessee shall remove the Storage Tanks from the premises on or before the expiration of the Lease and dispose of the Storage Tanks off the Airport in accordance with all Environmental Requirements.

(2) Without limiting the foregoing or any other term or provision of this Agreement, any removal of the Storage Tanks shall be performed pursuant to an alteration application prepared by the Lessee and submitted to the Port Authority for the Port Authority's approval and, in connection with such removal, the Lessee shall restore the premises to the same condition existing prior to the installation of the Storage Tanks, shall perform such testing of the Storage Tanks and of the soil, sub-soil and ground water in the vicinity of the Storage Tanks as shall be required by the Port Authority and shall clean-up and remediate contamination disclosed by said testing. In the event the Lessee does not remove the Storage Tanks as required by subparagraph (1) above, the Port Authority may enter upon the premises and effect the removal and disposal of the Storage Tanks, restoration of the premises and such remediation and the Lessee hereby agrees to pay all costs and expenses of the Port Authority arising out of such removal, disposal, restoration and remediation.

Section 55. <u>Federal Airport Aid</u>

The Port Authority has applied for and received a grant or grants of money from the Administrator of the Federal Aviation Administration pursuant to the Airport and Airways Development Act of 1970, as the same has been amended and supplemented or superseded by

similar federal legislation, and under prior federal statutes which said Act superseded and the Port Authority may in the future apply for and receive further such grants. In connection therewith, the Port Authority has undertaken and may in the future undertake certain obligations respecting its operation of the Airport and the activities of its contractors, lessees and permittees thereon. The performance by the Lessee of the covenants, promises and obligations contained in this Lease is therefore a special consideration and inducement to the making of this Agreement by the Port Authority, and the Lessee further covenants and agrees that if the Administrator of the Federal Aviation Administration or any other governmental officer or body having jurisdiction over the enforcement of the obligations of the Port Authority in connection with the Federal Airport Aid, shall make any orders, recommendations or suggestions respecting the performance by the Lessee of such covenants, promises and obligations under this Agreement, the Lessee will promptly comply therewith, at the time or times when and to the extent that the Port Authority may direct.

Section 56. Lessee's Rights Non-Exclusive

The rights and privileges granted to the Lessee are non-exclusive and neither the execution of this Lease by the Port Authority nor anything contained herein shall grant or be deemed to grant to the Lessee any exclusive rights or privileges including but not limited to the right to design, construct, lease, or operate an automobile service station and the right to provide towing emergency repair service at the Airport.

Section 57. One Hundred Twenty Day Termination

(a)(i) The Port Authority shall have the right to terminate this Agreement and the letting hereunder, without cause, at any time, on one hundred twenty (120) days' prior written notice to the Lessee. In the event that this Agreement and the letting hereunder is terminated pursuant to this Section, this Agreement and the letting hereunder shall cease and expire as if the effective date of termination stated in the notice were the date originally stated herein for the expiration of this Agreement.

(ii) Further, in the event the Port Authority exercises its right to revoke or terminate this Agreement for any reason other than "without cause", the Lessee shall be obligated to pay to the Port Authority an amount equal to all costs and expenses reasonably incurred by the Port Authority in connection with such termination, including without limitation any re-entry, regaining or resumption of possession, collecting all amounts due to the Port Authority, the restoration of any space which may be used and occupied under this Lease (on failure of the Lessee to have it restored), preparing such space for use by a succeeding lessee, the care and maintenance of such space during any period of non-use of the space, the foregoing to include, without limitation, personnel costs and legal expenses (including but not limited to the cost to the Port Authority of in-house legal services), repairing and altering the space and putting the space in order (such as but not limited to cleaning and decorating the same).

(b) The Lessee is obligated by this Agreement to furnish and install all fixtures and equipment and make all improvements in the premises, necessary or proper for its operations hereunder. In the event of termination by the Port Authority under this Section, the Port Authority shall pay the Lessee a *pro rata* share of the Lessee's cost in supplying and installing all such fixtures and equipment and making all such improvements excluding any replacements thereof. The cost and the *pro rata* share thereof shall be ascertained as stated in paragraph (c) hereof, provided, however, that tender of payment of said prorated cost by the Port Authority to the Lessee shall not be prerequisite to the exercise of the right of termination under this Section, but the Lessee shall be entitled to 4% interest per annum on said prorated cost for the period between the effective date of termination and the date of tender of payment (excluding any portion of the period prior to the rendering by the Lessee to the Port Authority of a statement and other documents of cost). On the payment by the Port Authority of said prorated cost and any interest due thereon, all fixtures, equipment and improvements including replacements furnished by the Lessee in the premises and all interest of the Lessee therein which have not already become the property of the Port Authority shall be and become the property of the Port Authority and the Lessee shall execute any and all instruments necessary to transfer title to any such interest, provided, however, that the Port Authority may by notice relinquish its right to any such fixtures, equipment or improvements and the provisions of Sections 48, 6 and 28 shall apply thereto.

(c) Cost and Proration Thereof:

(i) To the extent permitted by sound accounting practice, the sum of the following items of cost incurred by the Lessee for such equipment and fixtures and the installation thereof and the making of such improvements as are necessary to initially equip and improve the premises for the Lessee's commencement of operations hereunder, all as mentioned in the Section of the Agreement entitled "One Hundred Twenty Day Termination," and to the extent that such sum does not exceed Six Million Dollars and No Cents ($6,000,000.00) shall constitute the "cost" under the said Section and under subdivisions (ii), (iii), (iv), (v), (vi), and (vii) hereof:

(aa) Direct labor and material costs;

(bb) Contract costs for purchases and installation, including, without limitation, furniture, fixtures, and equipment, but excluding those of the types mentioned in the following subdivision (cc);

(cc) Engineering, architectural, planning, designing, financing, interest, insurance, and other overhead or carrying charges which are due for a period ending not later than the date of completion of installation of any such initial equipment, fixtures or improvements for which they are incurred, and not to exceed 20% of the total of the amounts covered by subdivisions (aa) and (bb) above.

(ii) A statement of the cost detailing all the foregoing including copies of invoices and contracts and certified by a responsible officer of the Lessee shall be delivered by

the Lessee to the Port Authority not later than ninety (90) days after the complete supplying and the making of all such initial improvements, and the Lessee shall permit the Port Authority, by its agents, employees and representatives, at all reasonable times prior to a final settlement or determination of cost, to examine an audit the records and books of account within the Port of New York District during such time.

(iii) If the Lessee includes in cost any items as having been incurred but which, in the opinion of the Port Authority, if so incurred is not an item properly chargeable to cost under sound accounting practice, then the Port Authority shall give written notice to the Lessee stating its objection to any such item and the grounds therefor. Determinations of the Port Authority hereunder shall be final.

(iv) The proration of cost as referred to in the Section of the Agreement entitled "One Hundred Twenty Day Termination" shall be ascertained by multiplying the cost by a fraction, the numerator of which shall be the number of whole calendar months (in the term of the letting as originally set forth) subsequent to the effective date of termination, and the denominator of which shall be the total number of months in the term of the letting as originally set forth.

(v) Notwithstanding any other provision of this Section in ascertaining the amount that the Port Authority shall be obligated to pay to the Lessee under said Section the cost computed as heretofore stated in this paragraph (c) shall be diminished by the amount that any part of the components of cost as stated in subdivisions (aa), (bb), and (cc) of subdivision (i) above are secured by liens, mortgages, other encumbrances or conditional bills of sale on such equipment, fixtures and improvements, unless such liens, mortgages, other encumbrances, or conditional bills of sale are paid and discharged of record prior to or simultaneously with the tender of payment of the prorated cost by the Port Authority to the Lessee; by the cost, if any incurred by the Port Authority to demolish the Lessee's facility upon the termination of the term of the letting and to restore the premises, and less any other amounts whatsoever due under this Agreement from the Lessee to the Port Authority. The Lessee may use any portion of the prorated cost tendered by the Port Authority to the Lessee to discharge of record any liens, mortgages, other encumbrances or conditional bills of sale on its equipment, fixtures and improvements. In no event whatsoever shall cost, as defined and computed in accordance with this paragraph (c) and as used in this Section include any expenses, outlays or charges whatsoever by or for the account of the Lessee for or in connection with any equipment or fixtures or the making of any improvement mentioned in this Section unless said equipment, fixtures and/or improvements are actually and completely installed in and/or made to the premises.

Section 58. Force Majeure

The Port Authority shall not be liable for any failure, delay or interruption in performing its obligations hereunder due to causes or conditions beyond the control of the Port Authority. Further, the Port Authority shall not be liable unless the failure, delay or interruption shall result from failure on the part of the Port Authority to use reasonable care to prevent or reasonable efforts to cure such failure, delay or interruption.

Section 59. Environmental Compliance

(a) The Lessee shall not dispose of, release or discharge nor permit anyone to dispose of, release or discharge any Hazardous Substance on, or under the premises or into any ditch, conduit, stream, storm sewer, or sanitary sewer connected thereto or located at the Facility. Any Hazardous Substance disposed of, released or discharged by the Lessee (or permitted by the Lessee to be disposed of, released or discharged) on the premises or at the Facility, shall upon notice by the Port Authority to the Lessee and subject to the provisions of all Environmental Requirements be completely removed and/or remediated by the Lessee. The obligations of the Lessee pursuant to this paragraph shall survive the expiration or termination of this Agreement.

(b) Upon the expiration or earlier termination of the letting hereunder, the Lessee shall at its sole cost and expense, remove or permanently close all underground storage tanks and associated piping in compliance with all environmental requirements including the conduct of a site assessment and performance of any necessary cleanup or remedial action. The Lessee shall provide the Port Authority with copies of all records relating to any underground storage tanks that are required to be maintained by any applicable environmental requirements.

(c) Promptly upon any termination of the letting hereunder, or when required by any applicable federal, state, or local regulatory authority, the Lessee shall perform, at its sole cost and expense, an environmental site assessment reasonably acceptable to the Port Authority to determine the event, if any, of contamination of the premises and shall, at its sole cost and expense, clean up, remove, and remediate (i) all Hazardous Substances in, on, or under the premises, (ii) any petroleum in, on, or under the premises in excess of allowable levels, and (iii) all contaminants and pollutants in, on, or under the premises that create or threaten to create a substantial threat to human health or the environment and that are required to be removed, cleaned up, or remediated by any and all applicable environmental requirements.

(d) The Lessee shall indemnify and save harmless the Port Authority from and against any and all liabilities, damages, suits, penalties, judgments, and environmental cleanup, removal, response, assessment, or remediation cost arising from contamination of the premises or release of any Hazardous Substance, pollutant, contaminant or petroleum in, on, or under the premises. The Lessee shall indemnify and save the Port Authority harmless from and against any and all loss of rentals or decrease in property values arising from Lessee's breach of paragraph (a) of this Section.

Section 60. Security Deposit

Upon the execution of this Agreement by the Lessee and delivery thereof to the Port Authority, the Lessee shall deposit with the Port Authority (and shall keep deposited throughout the term of this Agreement, the sum of One Hundred Thousand Dollars and No Cents ($100,000.00) either in cash, or bonds of the United States of America, or of the State of New York or of the State of New Jersey, or of the Port Authority of New York and New Jersey,

having a market value of that amount, as security for the full, faithful and prompt performance of and compliance with, on the part of the Lessee, all of the provisions, terms, covenants and conditions of the Agreement on its part to be fulfilled, kept, performed or observed and as security for the payment of all other rentals, fees, charges and obligations owed or which may become due and owing to the Port Authority arising from the Lessee's operations at the Airport, whether covered by a written agreement or otherwise. Bonds qualifying for deposit hereunder shall be in bearer form but if bonds of that issue were offered only in registered form, then the Lessee may deposit such bond or bonds in registered form, provided, however, that the Port Authority shall be under no obligation to accept such deposit of a bond in registered form unless such bond has been reregistered in the name of the Port Authority (the expense of such re-registration to be borne by the Lessee) in a manner satisfactory to the Port Authority. The Lessee may request the Port Authority to accept a registered bond in the Lessee's name and if acceptable to the Port Authority the Lessee shall deposit such bond together with a bond power (and such other instruments or other documents as the Port Authority may require) in form and substance satisfactory to the Port Authority. In the event the deposit is returned to the Lessee, any expenses incurred by the Port Authority in re-registering a bond to the name of the Lessee shall be borne by the Lessee. In addition to any and all other remedies available to it, the Port Authority shall have the right, at its option, at any time and from time to time, with or without notice to use the said deposit or any part thereof in whole or partial satisfaction of any of its claims or demands against the Lessee. There shall be no obligation on the Port Authority to exercise such right and neither the existence of such right nor the holding of the deposit itself shall cure any default or breach of the Agreement on the part of the Lessee. In the event that the Port Authority shall at any time or times so use the deposit, or any part thereof, or if bonds shall have been deposited and the market value thereof shall have declined below the above-mentioned amount, the Lessee shall, on demand of the Port Authority and within two (2) days thereafter, deposit with the Port Authority additional cash or bonds so as to maintain the deposit at all times to the full amount above stated, and such additional deposits shall be subject to all the conditions of this Section. After the expiration or earlier termination of the Agreement as the same may have been extended and upon condition that the Lessee shall then be in no wise in default under any part of the Agreement, as this Agreement may have been amended or extended (or both), and upon written request therefor by the Lessee, the Port Authority will return the said deposit to the Lessee less the amount of any and all unpaid claims and demands (including estimated damages) of the Port Authority by reason of any default or breach by the Lessee of the Agreement or any part thereof and less any other fees, charges and obligations owed to the Port Authority arising from the Lessee's operations at the Airport. The Lessee agrees that it will not assign or encumber the said deposit and any such assignment or encumbrances shall be void as to the Port Authority. The Lessee may collect or receive annually any interest or income earned on bonds and interest paid on cash deposited in interest bearing bank accounts less any part thereof or amount which the Port Authority is or may hereafter be entitled or authorized by law to retain or to charge in connection therewith, whether as or in lieu of administrative expense or custodial charge, or otherwise, provided, however, that the Port Authority shall not be obligated by this provision to place or to keep cash deposited hereunder in interest bearing bank accounts. Without limiting the foregoing provisions of this Section, with respect to any bonds deposited by the Lessee, the Port Authority shall have the right, in order to satisfy any of its claims or demands against the Lessee, to sell the same in whole or in part, at any time and from time to time, with or without prior notice, at public or private sale, all as determined by the Port

Authority together with the right to purchase the same at such sale free of any claims, equities or rights of redemption of the Lessee. The Lessee hereby waives all right to participate therein and all right to prior notice or demand of the amount or amounts of the Port Authority's claims or demands against the Lessee. The proceeds of any such sale shall be applied by the Port Authority first to the costs and expenses of the sale (including but not limited to any advertising or commission expenses) and then to the amounts due the Port Authority from the Lessee. Any balance remaining shall be retained in cash toward bringing the security deposit to the sum specified above provided that this shall not relieve the Lessee from maintaining the deposit in the full amount stated above.

(b) The Lessee may at any time during the effective term of the letting under this Agreement offer to deliver to the Port Authority, as security for all obligations of the Lessee under this Agreement, a clean irrevocable letter of credit issued by a banking institution satisfactory to the Port Authority and having its main office within the Port of New York District, in favor of the Port Authority in the amount of One Hundred Thousand Dollars and No Cents ($100,000.00).

The form and terms of such letter of credit, as well as the institution issuing it, shall be subject to the prior and continuing approval of the Port Authority. Such letter of credit shall provide that it shall continue throughout the effective term of the letting under this Agreement and for a period of not less than six (6) months thereafter; such continuance may be by provision for automatic renewal or by substitution of a subsequent satisfactory letter. Upon notice of cancellation of a letter of credit, the Lessee agrees that unless, by a date twenty (20) days prior to the effective date of cancellation, the letter of credit is replaced by security in accordance with paragraph (a) of this Section or another letter of credit satisfactory to the Port Authority, the Port Authority may draw down the full amount thereof and thereafter the Port Authority will hold the same as security under paragraph (a) of this Section. Failure to provide such a letter of credit at any time during the effective period of the permission, under this Agreement, valid and available to the Port Authority, including any failure of any banking institution issuing any such letter of credit previously accepted by the Port Authority to make one or more payments as may be provided in such letter of credit shall be deemed to be a breach of this Agreement on the part of the Lessee. Upon acceptance of such letter of credit by the Port Authority, and upon request by the Lessee made thereafter, the Port Authority will return the security deposit, if any, theretofore made under and in accordance with the provisions of paragraph (a) of this Section. The Lessee shall have the same rights to receive such deposit during the existence of a valid letter of credit, as it would have to receive such sum upon expiration of the permission under this Agreement and fulfillment of the obligations of the Lessee hereunder. If the Port Authority shall make any drawing under a letter of credit held by the Port Authority hereunder, the Lessee on demand of the Port Authority and within two (2) days thereafter, shall bring the letter of credit back up to its full amount.

(c) For purposes of the foregoing, the Lessee hereby certifies that its I.R.S. Federal Tax Identification No. is

Section 61. <u>Books and Records</u>

In addition to and without limiting the provisions of the Section of this Agreement entitled "Definitions" hereof or any term or provision of this Agreement, the Lessee shall keep in

an office or offices in the Port of New York District, appropriate books and records showing (i) all matters with respect to the costs of the construction work; (ii) all matters which the Lessee is required to certify to the Port Authority pursuant to this Lease and (iii) any and all other matters concerning the Lessee's operations at the Airport with respect to which the Port Authority may reasonably need information to fulfill its obligations or exercise its rights under this Lease whether or not of the type enumerated above in this Section and whether or not an express obligation to keep books and records with regard thereto is expressly set forth elsewhere in this Lease. The Lessee shall not be obligated to preserve any such records for more than seven (7) years after the receipt of revenues or occurrences of charges or expenses hereunder unless they are material to litigation initiated within that time, in which event they shall be preserved until the final determination of the controversy. The Port Authority shall have the right to audit and inspect such books and records during regular business hours.

Section 62. **Other Agreements**

The Lessee shall not, by virtue of the execution of this Agreement, be released or discharged from any obligations or liabilities whatsoever under any other agreements with the Port Authority.

Section 63. **Operating Names**

(a) Any name, designation or any service mark proposed to be used or displayed at the premises or for the Lessee's operations therein shall be approved in advance in writing by the Port Authority and the Lessee shall have the right to use and display the name, designation or mark only so long as this Agreement is in force and effect. If for any reason the Lessee ceases its operations in the premises, the Lessee's right to use such name, designation or service mark shall immediately cease and come to an end and the Port Authority or its designee shall have the sole right to use such name, designation or service mark and the Lessee hereby consents to such use thereof. Any registration or filing by the Lessee with respect to such name, designation or service marks shall indicate the Port Authority's interest therein and the form thereof shall be approved in advance by the Port Authority in writing. The Lessee agrees to assign and transfer to the Port Authority any such registration or filing and any other rights in or to the use of such name, designation or service mark promptly upon written request therefor from the Port Authority.

Nothing herein contained is intended to apply to the continuing use by the Lessee of its customary name, designation or service mark used elsewhere in its operations prior to its making of this Agreement.

Section 64. **Space Licenses**

Notwithstanding the provisions of paragraphs (b) and (d) of the Section of this Agreement entitled "Assignment and Sublease", the Lessee may license a third person to operate

the multi-fuel vehicle service station and towing service at the premises pursuant to the provisions of Section 3 of this Agreement provided, however, that:

(1) the proposed licensee, its Chief Operating Officer, or the employee chiefly responsible for the operations being conducted on the premises shall have an established record and more than three (3) years' experience in the operation of a multi-fuel vehicle service station similar in size to that described herein, and including the operation of a natural gas fueling station and towing service, and shall have adequate and experienced staff and management personnel to give full time attention to the operation in the premises of the proposed service station in accordance with all the terms and conditions of this Agreement and to fulfill all of the Lessee's obligations with respect to such concession under this Agreement throughout the term of the letting hereunder; and

(2) the proposed licensee shall have the same obligation as the Lessee has as to the use of the premises which shall be in accordance with the purposes set forth in Section 3 of this Agreement, and the proposed licensee shall use the area for no other purpose whatsoever; and

(3) the proposed licensee, and each officer, director or partner thereof, and each person, firm or corporation having an outright or beneficial interest in twenty percent (20%) or more of the monies invested in the proposed licensee, if the proposed licensee is a corporation or partnership, by loans thereto, stock ownership therein, or any other form of financial interest, has as of the date of the proposed license agreement a good reputation for integrity and financial responsibility and has not been convicted or nor is under current indictment for any crime and is not currently involved in civil anti-trust or fraud litigation, or any proceedings indicative of a lack of business integrity; and

(4) neither the proposed licensee nor any officer, director, or partner thereof, nor any person, firm or corporation having an outright or beneficial interest in twenty percent (20%) or more of the monies invested in the proposed licensee, if the proposed licensee is a corporation or partnership, by loans thereto, stock ownership therein, or any other form of financial interest is in conflict of interest, as defined under the laws of the State of New York with any Commissioner of the Port Authority as of the date of the proposed assignment;

(5) the Port Authority shall not have had any unfavorable experience with the proposed licensee, or any of its officers, directors, or partners, or any person, firm or corporation having an outright or beneficial interest in twenty percent (20%) or more of the monies invested in the proposed licensee, if such licensee is a corporation or partnership, by loans thereto, stock ownership therein or any other form of financial interest; and

(6) neither the proposed licensee, nor any officer, director or partner thereof, nor any person firm or corporation having an outright or beneficial

interest in twenty percent (20%) or more of the monies invested in the proposed licensee, if the proposed licensee is a corporation or partnership, by loans thereto, stock ownership therein, or any other form of financial interest has filed a voluntary petition in bankruptcy or has been adjudicated a bankrupt within five years prior to the date of the proposed license agreement; and

provided, further, however, that no such license agreement shall be effective until an agreement in the form annexed hereto as "Exhibit Z" has been executed by the Port Authority, the Lessee and the proposed licensee. The Port Authority agrees to execute such agreement provided that the proposed licensee fulfills the requirements and conditions set forth in subdivisions (1) through (6) of this Section. The agreement between the Lessee and the licensee shall be made expressly subject to the terms and provisions of this Agreement, and each licensee shall comply with all of the terms and provisions of this Agreement applicable to the premises and shall use and occupy the premises as though such licensee were the Lessee hereunder. The Lessee understands that notwithstanding the retention of third persons to operate the multi-fuel service station hereunder, the Lessee shall remain fully liable for the performance of all of the terms and provisions of this Agreement, and for securing compliance therewith by its licensee. All acts and omissions of the Lessee's licensee shall be deemed acts or omissions of the Lessee. In spite of any effort by the Lessee to secure compliance with all of the terms and provisions of this Agreement by its licensee, any breach or violation of the terms and provisions of this Agreement by the licensee shall be deemed a breach or violation of this Agreement by the Lessee, and in such event the Port Authority shall have all rights or remedies consequent upon such breach or default as are reserved to it by this Agreement, and, subject to all notice requirements as are set forth herein, the provisions of this Agreement relating to default and termination shall apply as if the licensee were the Lessee hereunder. For the purpose of computing the percentage and variable rentals payable by the Lessee hereunder, all monies, payments or fees paid or payable to the Lessee by its licensee in connection with the licensee's operations in the premises (including all monies, payments or fees described in the applicable license agreements between the Lessee and its licensee other than reimbursements of rentals, including, without limitation, percentage and variable rentals, and other charges payable by the Lessee to the Port Authority pursuant to the terms of this Agreement) and all gross receipts arising out of the operations of such licensee in the premises shall be deemed to be gross receipts of the Lessee, shall be included in the gross receipts of the Lessee hereunder, and shall be subject to the percentage rental payable hereunder.

Section 65. Certain Environmental Testing and Clean-up Obligations

(a) (1) Attached hereto, hereby made a part hereof is an exhibit marked "Exhibit M" which consists of a "Newark Liberty International Airport, Proposed Service Station, Environmental Subsurface Baseline Investigation, Final Report, dated July 2006" including its appendices and compilation of reports and tests results of subsurface soil and groundwater samples taken on various dates as set forth in Exhibit M from a total of ten (10) soil borings setting forth the levels of PP + 40 (Priority Pollutant plus 40 compounds), including total xylenes, methyl tertiary butyl ether (MTBE), total petroleum hydrocarbon (TPHC), and tert-butyl alcohol (TBA), all as more specifically named and set forth in Exhibit M.

(2) All of the aforesaid items for which the said samples were tested as set forth in Exhibit M ("Exhibit M") are hereinafter referred to as the "Analyzed Items."

(3) The Port Authority hereby represents to the Lessee and the Lessee acknowledges and agrees that the aforesaid Exhibit M as attached hereto contains and sets forth tests results and a report of subsurface environmental investigations performed at the Premises by or on behalf of the Port Authority prior to the execution of this Lease and for purposes of establishing the Initial Existing Condition as hereinafter defined.

(4) Further, the Lessee may, subject to the terms and conditions of Section 6 hereof and subject to the coordination requirements of subparagraph (b) (4) below, take other samples from various locations on the Premises selected by the Lessee and agreed to by the Port Authority which shall be analyzed by qualified personnel of an independent laboratory, mutually acceptable to the Port Authority and the Lessee, in accordance with State and Federal laws, ordinances, rules, regulations, requirements, orders or directions for petroleum and/or hazardous substance characterization and the results thereof shall be set forth in a report prepared by such laboratory and upon delivery of such report and tests results to the Port Authority, such report and test results shall become part of Exhibit M and of the Current Remediation, as hereinafter defined, on condition and provided that: (i) the said sampling and testing were done in accordance with a methodology approved by the Port Authority; (ii) no part of such test results nor any such report shall become part of Exhibit M or of the Initial Existing Condition or of the Current Remediation unless all such samples, test results and the report are completed prior to the Completion Date, as hereinbefore defined in Section 6 hereof; (iii) that should such test results and report list contaminants not now set forth in Exhibit M as attached hereto on the execution date of this Lease or indicate a higher level of any of the Analyzed Items set forth in said Exhibit M then such contaminant or contaminants and such higher level or higher levels shall become part of Exhibit M only if the Lessee proves to the reasonable satisfaction of the Port Authority that such contaminant or contaminants and such higher level or higher levels existed in the Premises prior to the effective date of this Lease and provided, further, that such contaminant or contaminants and such higher level or higher levels were not caused by or did not result from any act or omission of the Lessee or of any of its agents, contractors or representatives; it being expressly understood and agreed that any such newly discovered contaminant or contaminants and such higher level or higher levels not so made a part of Exhibit M shall be included within the Lessee's sole responsibilities for contaminants and remediation at the Premises under paragraph (c) hereof.

(5) The said reports and tests results set forth in Exhibit M (including any supplemental reports and test results as may be called for under paragraph (b) hereof) for the purposes of this Lease, the levels of the Analyzed Items in the soil and upper aquifer in the Premises at the commencement of the term of the letting hereunder and are herein called the "Initial Existing Condition," and said reports and tests results produced in connection therewith and, together with the results of any subsequent reports and tests which may be made supplemental to or which may supersede those in Exhibit M or of the applicable portions thereof as provided for in paragraph (d) below as applied by the aforesaid methodology to all portions of the Premises, are, for purposes of this Lease, hereinafter called the "Existing Condition," provided, however, in no event shall the level of any Analyzed Item in any Existing Condition be

above the lower of (i) the level of such Analyzed Item as set forth in the Initial Existing Condition, or (ii) the lowest level to which such Analyzed Item has been remediated to as shown in a succeeding Existing Condition.

(b) (1) It is hereby recognized by the parties hereto that as a result of the reporting of the Initial Existing Condition to the New York State Department of Environmental Conservation (hereinafter called the "DEC") the DEC may require remediation of the Initial Existing Condition including all appropriate borings and wells required for said remediation (which remediation is herein called the "Current Remediation") and that the Port Authority and the DEC are currently undertaking discussions to establish a level to which each of the Analyzed Items in the ground water and soil in the Premises must be remediated by the Current Remediation (which level or levels as established for each of the Analyzed Items is hereinafter called a "Clean-Up Level"). It is understood and agreed solely with respect to and solely during and for the period of the Lessee's performance of the Construction Work under Section 6 hereof, that said Current Remediation shall, as between the Lessee and the Port Authority, be deemed to include the remediation as may be required by the DEC of any contaminant or contaminants discovered by the Port Authority during the performance of the Current Remediation or by the Lessee during the performance of the Construction Work and not now set forth in Exhibit M, provided, however, that such contaminant or contaminants are determined by the Port Authority to have been existing in the Premises prior to the effective date of this Lease and provided, further, that such contaminant or contaminants were not caused by or did not result from any act or omission of the Lessee or of any of its agents, contractors or representatives; and Exhibit M shall be supplemented to include the reports and test results of any such newly discovered contaminant or contaminants so included in the Current Remediation in accordance with the foregoing; it being expressly understood and agreed that any such newly discovered contaminant or contaminants not so made a part of the Current Remediation shall be deemed included within the Lessee's sole responsibilities for contaminant(s) and remediation at the Premises under paragraph (c) hereof. Neither the provisions of this Section 65 nor any reference herein to the DEC or to the Port Authority's Current Remediation or to any governmental agency which may succeed to the DEC shall or shall be construed as any consent by the Port Authority to the jurisdiction of such agency over the Port Authority or its operations at the Airport or any waiver of any Port Authority position or policy with respect thereto.

(2) The Port Authority hereby recognizes that the Lessee may be performing the Construction Work, or portions thereof as the case may be, under Section 6 hereof concurrently with the performance of the Current Remediation and the Lessee hereby likewise recognizes that the performance of the Current Remediation may occur concurrently with the Lessee's performance of the Construction Work. The Port Authority agrees to consult with the Lessee in the scheduling of the Current Remediation so as to provide minimum interference with the Lessee's scheduling of the Construction Work and the Lessee likewise agrees to consult with the Port Authority in the Lessee's scheduling of the Construction Work, subject to the requirements of the DEC for the Current Remediation, so as to provide minimum interference with the Current Remediation.

(3) As between the Lessee and the Port Authority, and based on the Lessee's comprehensive plan and design of the Construction Work under Section 6 hereof, as

and when approved by the Port Authority and as further described in and subject to paragraph (c) below, the Lessee shall not be responsible for the Current Remediation, except that the Lessee shall be responsible for any and all increased expenses including without limitation all costs and expenses relating thereto necessary, required, or appropriate as a result of, caused by, incidental to or triggered by any change in the said Lessee's comprehensive plan or any change in the design, method or scope of the Construction Work required under Section 6 hereof unless such change had theretofore received the prior review and the written approval of the Port Authority including the Port Authority's written consent in a writing signed by the Port Authority's Director of Aviation to the impact of such change on the Current Remediation (which remediation costs and expenses for which the Lessee is so responsible is hereinafter called the "Lessee's Incremental Costs of the Current Remediation").

(4) Without limiting the generality of any provision of the Lease, in the event that any applicable governmental or regulatory environmental requirements set forth more than one compliance standard, the Port Authority and the Lessee agree that the standard or standards to be applied in connection with any obligation they each may have under the Lease with respect to environmental requirements shall be that which requires or permits the lowest level of a hazardous substance; provided, however, in the event that, after the completion of the Current Remediation, such lowest level of hazardous substance requires or allows the imposition of any restriction of any nature whatsoever upon the use or occupancy of the Premises or any other portion of the Facility or upon any operations or activities conducted or to be conducted on the Premises or the Facility, then the Lessee shall remediate and clean up to such a level so that there is no such restriction placed upon the use and occupancy of the Premises or the Facility or upon any operations or activities conducted or to be constructed on the Premises or the Facility.

(5) The Lessee further agrees that, the Port Authority shall have the right at any time and from time to time, acting in its sole discretion and without any obligation whatsoever to the Lessee or otherwise to do so, to designate any level or levels or standard or standards of remediation or cleanup permitted or required under any such environmental requirements, and such designation shall be binding upon the Lessee with respect to its obligations under the Lease with respect to such environmental requirements.

(c) Without limiting the generality of paragraph (b) hereof or any other term or provision of the Lease, the Lessee agrees to accept the Premises "as is" and, except as set forth in subparagraphs (1) through (6) below, to be solely responsible for any and all contaminants, and any and all soil and ground water or other contamination and remediation thereof, in and on the Premises, including without limitation, all costs and expenses thereof (including, without limitation the Lessee's Incremental Costs of the Current Remediation) and any and all claims, penalties or other expenses relating thereto. It is expressly understood and agreed that the proper handling, delivery, treatment, storage, transportation, disposal and depositing (all of the foregoing being hereinafter collectively called "Disposal"), whether on or off the Airport, of any soil, dirt, sand, water or other matter excavated, disturbed or removed by the Lessee (or by any contractor or contractors of the Lessee) at or from the Premises (or any other area of the Airport) at any time or times including, without limitation, any and all Disposal of such matter in connection with the performance of the Construction Work and any and all remediation and Disposal of such matter and any and all other remediation, Disposal and cleanup (whether soil,

upper aquifer or otherwise) necessary, required or appropriate as a result of, caused by, incidental to or triggered by such excavation, disturbance or removal of such matter or arising therefrom, and the taking or doing of any and all other action or actions necessary, required or appropriate in connection therewith, and in accordance with all Environmental Requirements, shall be the sole and complete responsibility of the Lessee including, without limitation, all costs and expenses thereof and any and all claims, penalties or other expenses relating thereto. The foregoing obligations of the Lessee shall obtain and apply with full force and effect irrespective of the nature or source of any contaminant, pollutant, chemical, waste or other substance or whether any of the same is an Analyzed Item or whether any of the same is at a level or levels above or below the level or levels of the Existing Condition or whether there has or has not been any increase in such level or levels. The Lessee shall perform all of the foregoing in accordance with and subject to all the terms, provisions, covenants and conditions of the Lease. Notwithstanding any other provision hereof to the contrary, the Lessee shall not be responsible for the following remediation of and contamination in and on the Premises:

(1) the Current Remediation except for the Lessee's Incremental Costs of the Current Remediation;

(2) contamination of soil and ground water caused by the acts and omissions of the Port Authority;

(3) remediation (exclusive of the Lessee's Incremental Costs of the Current Remediation) of the Existing Condition required solely by the DEC (or such other applicable governmental agency, if any, succeeding to the DEC and which has jurisdiction over the operations of the Port Authority at the Airport or with whose governmental requirements the Port Authority has agreed to conform) lowering below the Clean-Up Level for an Analyzed Item the level the DEC will accept on the Premises of such Analyzed Item;

(4) contamination caused solely by the flow of ground water or the leaching of soil from outside the Premises;

(5) contamination and contaminants existing in or on the Premises prior to the effective date of this Lease which are discovered subsequent to the establishment of the Existing Condition and are not listed in Exhibit M and the remediation thereof; except that the Lessee shall be solely responsible for such contamination and contaminants and the remediation thereof if (i) the Lessee is not able to or does not establish or prove to the satisfaction of the Port Authority that such contamination and contaminants in fact existed in or on the Premises prior to the effective date of this Lease, or (ii) if any such contamination or contaminants were caused by or resulted from any act or omission of the Lessee or of any of its agents, contractors or representatives;

(6) remediation of soil which is excavated by the Lessee in order for it to perform the Construction Work pursuant to and under Section 6 hereof and during the course of the Construction Work under Section 6 hereof and which soil is not used at the Site (as defined in Section 1 hereof); provided that (i) the Lessee shall deliver such soil at its sole expense to an on or off Airport location as designated by the Port Authority, (ii) the contaminant

or contaminants in such soil were not caused by or did not result from any act or omission of the Lessee, and (iii) the Lessee is able to prove to the satisfaction of the Port Authority that such contaminant or contaminants, if not listed in Exhibit M, in fact existed in the Premises prior to the effective date of the Lease.

(d) Without limiting the generality of the provisions of Section 22 of this Lease, the Port Authority and its designees shall have the right but not the obligation to enter upon the Premises upon forty-eight (48) hours' notice (or such shorter notice period as may be required by the DEC or such other governmental agency or agencies as described above) to the Lessee to conduct testing and related activities from the wells made by borings referred to in paragraph (a) above, to make additional borings and wells and to conduct testing and related activities therefrom, and to perform such activities as shall be necessary to perform the Current Remediation as and to the extent set forth in paragraph (b) above and to otherwise remediate the Existing Condition to the extent the Lessee is not required to do so by this Section 65, including but not limited to, conducting pumping from the wells made by borings referred to in paragraph (a) above and in this paragraph (d). In the exercise of the foregoing rights the Port Authority shall not unreasonably interfere with the use and occupancy of the Premises by the Lessee.

(e) If after any remediation performed on the Premises, whether by the Lessee, the Port Authority or a third party(ies), the Port Authority shall sample and test the soil and/or aquifer of the Premises or portions thereof and shall set forth the results of such samplings and tests in a report (it being understood however that the Port Authority shall not have any obligation to perform such sampling, testing or to set forth such results in a report), upon delivery of such report and test results to the Lessee, such report and test results shall supersede and replace Exhibit M or the applicable portions thereof if the test results and reports are of Analyzed Items which have been previously tested and the results thereof reported in Exhibit M from the same well or boring or a new well or boring which is immediately adjacent to such well or boring and shall supplement Exhibit M or the applicable portions thereof if the test results and reports would not supersede any test results and reports in Exhibit M as aforesaid, and the said results of such report setting forth the levels of the Analyzed Items in the soil and upper aquifer of the Premises together with those portions of Exhibit M which have not been replaced shall thereafter upon such delivery thereafter to the Lessee be and be deemed to be the "Existing Condition" under this Section 65; provided, however, and notwithstanding the foregoing, and subject to and in accordance with this Section, in no event shall the level of any Analyzed Item in any Existing Condition be above the level for such Analyzed Item as set forth in the Initial Existing Condition or the lowest level to which such Analyzed Item has been remediated.

(f) Without limiting the generality of the provisions of Section 12 of the Lease, the Lessee agrees to protect and maintain the wells made by the borings referred to in paragraph (a) above and shall repair any damage thereto not caused by the activities of the Port Authority or its designees, if any, pursuant to paragraphs (e) above. If in connection with the Construction Work under Section 6 hereof it is necessary to fill any of the said wells, then, provided that such filling is permitted or approved by the Port Authority and provided that the Current Remediation may in the determination of the Port Authority proceed with a replacement well or wells, the Lessee shall perform all work (other than the filling of the well or wells) necessary or required for a replacement well or wells in accordance with the terms and

provisions of the Lease and the related Construction Application(s) to be submitted by the Lessee covering such work in accordance with Section 6 hereof, as the same may be approved by the Port Authority, and, further, the Lessee hereby agrees that all costs and expenses for and in connection with the drilling of a new well or wells to replace the filled well or wells shall be borne solely by the Lessee without any reimbursement from the Port Authority. The obligation of the Lessee to protect and maintain the wells as set forth in the first sentence of this paragraph (f) shall be deemed to also pertain and apply to any and all such replacement wells.

(g) The terms and conditions of this Section are intended to allocate obligations and responsibilities between the Lessee and the Port Authority. Nothing in this Section 65shall limit, modify or otherwise alter the rights and remedies which the Port Authority or Lessee may have against third parties at law, equity or otherwise.

Section 66. Official Inspection Station

(a) The Lessee is hereby granted permission to maintain a New Jersey State official inspection station for motor vehicles. The Lessee shall, during the entire period it conducts such official inspection station, maintain in effect, licenses, certificates or other authorization required to conduct motor vehicle inspections and shall comply with all governmental requirements governing the same. The permission granted herein shall in no way constitute the Lessee an agent of the State of New Jersey for the purpose of conducting such official inspection or constitute the necessary governmental authorization to conduct the same.

(b) It is hereby expressly understood that the permission granted above for the operation of an official inspection station is subject to revocation at any time, without cause, upon thirty (30) days' prior written notice from the Port Authority to the Lessee and the Lessee shall cease use from and after the effective date of any such notice. Revocation hereunder shall not affect any of the other terms and provisions of the Lease which shall continue in full force and effect.

Section 67. Phase 1A Roadway Work

(a) The parties hereby acknowledge that the Port Authority is performing a certain landside access construction project at the Airport consisting generally of the following portions: a) the construction of certain roadway improvements at the Airport's principal roadway entrance; b) the construction of an inbound ramp connecting the I-78 Connector to Brewster Road and a corresponding ramp to facilitate outbound movements of traffic; c) the construction of roads to connect Monorail Stations "D2" and "E" to adjacent Airport roads, and drop-off/pick-up facilities at said Stations; d) an expansion of the Central Terminal Area Complex recirculation road; and e) other roadway improvements related thereto; all of the foregoing portions being hereinafter collectively called the "Phase 1A Roadway Work".

(b) (1) For purposes of this Lease, the term "Phase 1A Costs" shall mean the total costs in connection with all portions of the Phase 1A Roadway Work, which shall be the total of

the following costs as such costs are incurred in the performance of each portion of the Phase IA Roadway Work.

A. Construction Costs:

(1) payments to independent contractors, vendors and suppliers;
(2) premiums or charges for Performance Bonds;
(3) insurance premiums or charges;
(4) direct payroll and expenses of Port Authority employees and agents engaged in performance or supervision of the work, charged in accordance with Port Authority accounting practice.

B. Engineering Services:

(1) payments to independent consultants and engineering firms;
(2) direct payroll and expenses of Port Authority staff arising in connection with the work, charged in accordance with Port Authority accounting practice.

C. Other direct costs charged in accordance with Port Authority accounting practice.

D. Liquidated overhead in lieu of the Port Authority's administration and overhead costs in the amount of ten percent (10%) of the sum of all other elements of cost included in the Port Authority's net total cost (including Financial Expenses in 'E' below).

E. Financial Expenses on the foregoing computed in accordance with Port Authority accounting practice.

(2) "Phase 1A Charge Commencement Date" shall mean the date on which the Port Authority shall have certified that the construction of any portion of the Phase 1A Roadways has been substantially completed, provided, however, if any such date shall occur on other than the first day of a calendar month, the Phase 1A Charge Commencement Date shall mean the first (1st) day of the first (1st) full calendar month immediately following the month during which the said date occurs.

(3) (i) "The Phase 1A Factor" shall mean the sum of (I) the respective averages of the annual capital investment recovery rates of the "25-Bond Revenue Index" appearing in the respective last issues of "The Bond Buyer" published during each of the respective calendar years commencing on January 1, 1992 for which each such average will be applied, plus (2) one hundred fifty (150) basis points.

(ii) In the event that "The Bond Buyer" or its "25-Bond Revenue Index" shall be discontinued prior to the date on which the Port Authority determines the Phase 1A Factor, then the Port Authority shall by notice to the Lessee propose a comparable substitute for such Index for all subsequent periods as aforesaid. The determination of the Port Authority as to such substitute shall be final.

(4) The "Phase 1A Charge Period" or "Phase 1A Charge Periods" shall mean the period or periods, as the case may be, commencing on the applicable Phase 1A Charge Commencement Date and ending on the day immediately preceding the twenty-fifth (25th) anniversary of said Phase 1A Charge Commencement Date.

(5) For purposes of the calculations under this Section 55, "PFC Funds" shall mean revenues derived from fees (hereinafter called "Passenger Facility Charges") charged air passengers at the Airport, a portion of which revenues, as available, shall be applied to the Phase 1A Costs in accordance with Port Authority applications therefor as approved by the Federal Aviation Administration, the amount of which PFC Funds to be applied to the Phase 1A Costs being limited in amount to a total of Fifty Million Dollars and No Cents ($50,000,000.00).

(c) (1) For any period from the applicable Phase 1A Commencement Date through the 31st day of December of the year in which the said date occurs (all such periods, for purposes of this Section 55, being hereinafter referred to individually as a "Phase IA Period"), the Port Authority shall establish and the Lessee shall pay a Phase IA Charge, as follows:

(i) The Port Authority shall determine the portion of the total Phase IA Costs paid or incurred by the Port Authority up to and including the day immediately preceding the said Phase 1A Commencement Date, each such portion being hereinafter referred to as the "Phase 1A Investment".

(ii) The Port Authority shall deduct from the first and each subsequent Phase 1A Investment determined in subsubparagraph (i) above the amount of PFC Funds available to be applied to the Phase 1A Costs until the amount of available PFC Funds is exhausted, the remainder and each such portion thereafter being hereinafter referred to as the "Net Phase 1A Investment".

(iii) The Port Authority shall estimate an amount (each such amount being hereinafter referred to as the "Annual Phase 1A Capital Cost") equal to even monthly payments derived by multiplying the applicable Net Phase 1A Investment by a monthly multiplier derived in accordance herewith from time to time by the application of the following formula:

$$\frac{1}{\frac{1}{i} - \frac{1}{i(1+i)^t}} = \text{Monthly Multiplier}$$

Where i equals the Phase 1A Factor (as estimated by the Port Authority) divided by twelve.

Where t (a power) equals 300.

(iv) The Port Authority shall determine the Total Developed Land Square Feet on the Airport, as defined in Section 44 of the Lease, for the calendar year immediately preceding the applicable Phase 1A Commencement Date, shall convert the same to acres, and shall divide the applicable Annual Phase 1A Capital Cost by said Total as converted to acres, the quotient thereof being hereinafter referred to as the "Phase 1A Charge Per Acre".

(v) The Port Authority shall multiply the total developed land area at the Airport by 0.____%, or the percentage then in effect, which percentage constitutes the portion of said total occupied by the Lessee hereunder, the product thereof being hereinafter referred to as the "Lessee's Terminal Acreage".

(vi) The Port Authority shall multiply the applicable Lessee's Terminal Acreage by the applicable Phase 1A Charge Per Acre, the product thereof being herein referred to as the "Phase 1A Charge".

(2) At the time the Port Authority advises the Lessee of the final Airport Services Factor for the calendar year during which any respective Phase 1A Period occurs, the Port Authority shall also advise the Lessee of the applicable Phase 1A Charge, which shall be the amount due and payable by the Lessee to the Port Authority for each calendar month during the applicable Phase 1A Period and for each and every month in the calendar year during which the Phase 1A Charge is calculated. The Lessee shall pay the accumulated total thereof for each month of the applicable Phase 1A Period and for the months that have elapsed since the end of the applicable Phase 1A Period at the time it pays the tentative Airport Services Factor for the calendar month following the month during which the applicable Phase 1A Charge is calculated. The Lessee shall continue to make payments based on the said Phase 1A Charge until the same is further adjusted based upon actual costs incurred in the performance of the Phase 1A Roadway Work, as provided in subparagraph (3) hereof.

(3) After the close of calendar year 1996 and after the close of each calendar year thereafter up to and including the calendar year during which the Phase 1A Roadway Work is completed, the Port Authority will adjust, if necessary, the applicable Phase 1A Charge, as follows:

(i) The Port Authority shall determine the portion of the total Phase 1A Costs paid or incurred by the Port Authority during the calendar year for which the adjustment is being made for any portion of the Phase 1A Work certified as complete and operational, each such portion being hereinafter referred to as the "Final Phase 1A Investment".

(ii) The Port Authority shall determine an amount (each such amount being hereinafter referred to as the "Final Annual Capital Cost") equal to even monthly payments derived by multiplying the applicable Final Phase 1A Investment by a monthly multiplier derived in accordance herewith from time to time by the application of the following formula:

$$\frac{1}{\frac{1}{i} - \frac{1}{i(1+i)^t}} = \text{Monthly Multiplier}$$

Where i equals the Phase 1A Factor (as estimated by the Port Authority) divided by twelve.

Where t (a power) equals 300.

(iii) The Port Authority shall determine the final Phase 1A Charge Per Acre in the manner set forth in item (iv) of sub subparagraph (c)(l) hereof.

(iv) The Port Authority shall determine the final Lessee's Terminal Acreage in the manner set forth in item (v) of sub subparagraph (c)(l) hereof.

(v) The Port Authority shall determine the final Phase 1A Charge in the manner set forth is item (vi) of sub subparagraph (c)(l) hereof.

(4) At the time the Port Authority advises the Lessee of the final Airport Services Factor for the calendar year for which the said determination is being made, the Port Authority shall also advise the Lessee of the final Phase IA Charge, which shall be the amount due and payable by the Lessee to the Port Authority for each calendar month during the calendar year for which the said determination is being made and for each and every month thereafter during the remainder of the Phase 1A Charge Period. The Lessee shall pay the said Phase 1A Charge at the time it pays the tentative Airport Services Factor for the calendar month following the month during which the said Phase 1A Charge is calculated and shall continue to make payments based on the said Phase 1A Charge at the time it pays each Airport Services Factor during the remainder of the Phase IA Charge Period.

(5) In the event that the Port Authority shall determine that it expended in the cost of any portion of the Phase 1A Roadway Work amounts as set forth in subsubparagraph (b)(1) hereof which total more or which total less than the applicable Phase 1A Costs in effect on the day immediately preceding the applicable Phase 1A Charge Commencement Date up to the time of such determination or at any time after the determination of any final Phase 1A Charge then, (x) if more was expended, within thirty (30) days after demand of the Port Authority, the Lessee shall pay to the Port Authority an amount equal to the difference between the amounts expended by the Port Authority as so determined by the Port Authority and, (y) if less was expended, the Port Authority shall credit to the Lessee an amount equal to the difference between the amounts expended by the Port Authority as so determined by the Port Authority and, in each case, the aforesaid Phase 1A Costs or such final Phase 1A Charge, as the case may be, in effect on the day immediately preceding the applicable Phase 1A Charge Commencement Date or the day immediately preceding the end of the calendar year for which such final Phase 1A Charge is

calculated, and, effective from and after such date of such payment or credit, the applicable Phase 1A Costs for purposes of subparagraph (c) hereof shall be increased or decreased, as the case may be, by the amount of such payment or credit and the applicable Phase 1A Charge payable by the Lessee adjusted appropriately hereunder.

(6) Any deficiency in the amounts due to the Port Authority from the Lessee for any calendar year resulting from the adjustment of any Phase IA Charge shall be paid to the Port Authority by the Lessee within thirty (30) days after demand therefor and any excess payments made by the Lessee determined on the basis of an adjusted Phase IA Charge shall be credited against future rentals, such credit to be made within thirty (30) days following the adjustment of the applicable Phase IA Charge, as the case may be.

Section 68. Entire Agreement

This Agreement consists of the following: Sections 1 through 68 and Exhibit A, B, M and Z and Schedules A, E, F and X. It constitutes the entire agreement of the parties on the subject matter hereof and may not be changed, modified, discharged or extended except by written instrument duly executed by the Port Authority and the Lessee. The Lessee agrees that no representations or warranties shall be binding upon the Port Authority unless expressed in writing in this Agreement.

IN WITNESS WHEREOF, the parties hereto have executed these presents as of the day and year first above written.

ATTEST:

Secretary

THE PORT AUTHORITY OF NEW YORK AND NEW JERSEY

By DAVID KREAN

(Title) Assistant Director

(Seal)

WITNESS:

GAZ REALTY, INC.
d/b/a NEWARK AIRPORT PLAZA INC.

By

George Abi Zeid

(Title) President

Corporate Seal)

APPROVED:
FORM TERMS

EXHIBIT B

PERFORMANCE AND PAYMENT BOND

KNOW ALL MEN BY THESE PRESENTS that we, the undersigned* Contractor and surety company (or companies), as principal and surety (or sureties), respectively,

Contractor _____ Surety _____

are hereby held and firmly bound unto The Port Authority of New York and New Jersey (herein called the "Authority") in the penal sum of _____ Dollars and _____ Cents ($ _____.), for the payment of which, well and truly to be made, we hereby jointly and severally bind ourselves, our heirs, representatives, executors, administrators, successors and assigns. Each surety, however, if there is more than one, shall be jointly and severally liable for said penal sum.

Signed this _____ day of _____ 2008

The condition of the above obligation is that

WHEREAS, the above named principal has entered into a Contract in writing with the Authority, a copy of which is hereby made a part of this bond as though herein set forth in full and which is designated Contract ,
and

WHEREAS, the Authority has required this bond for the faithful performance of all obligations imposed by said Contract and also for the payment of all lawful claims of subcontractors, materialmen and workmen arising out of the performance of said Contract;

NOW, if the said principal shall well and faithfully do and perform the things agreed by him to be done and performed according to the terms and true intent and meaning of said Contract and if all lawful claims of subcontractors, materialmen and workmen arising out of the performance of said Contract are paid, then this obligation shall be void, otherwise the same shall remain in full force and effect; it being expressly understood and agreed that, provided the sureties shall comply with the provisions hereof, the aggregate liability of all sureties for any and all claims hereunder shall in no event exceed the penal amount of this obligation as hereinbefore stated.

This undertaking is for the benefit the Authority and all subcontractors, materialmen and workmen having lawful claims arising out of the performance of said Contract, and all such subcontractors, materialmen and workmen (as well as the Authority itself) shall have a direct right of action upon this bond; but the rights and equities of such subcontractors, materialmen and workmen shall be subject and subordinate to those of the Authority.

The sureties, for value received, hereby stipulate and agree that the obligations of said sureties and their bond shall be in no way impaired or affected by any extensions of time, modification, omission, addition or change in or to the said Contract or the construction to be performed thereunder, or by any supervision or inspection or omission to supervise or inspect the construction, or by any payment thereunder before the time required therein, or by any waiver of any provision or condition thereof (whether precedent or subsequent), or by any assignment, subletting or other transfer thereof or of any part thereof or of any construction to be performed or any moneys due or to become due thereunder; and said sureties do hereby waive notice of any and all of such extensions, modifications, omissions, additions, changes, payments, waivers, assignments, subcontracts and transfers, and hereby expressly stipulate and agree that any and all things done and omitted to be done by and in relation to assignees, subcontractors and other transferees shall have the same effect as to said sureties as though done by or in relation to said principal.

The sureties shall give the General Counsel of the Authority the following notices:

A. Written notice of an intent to pay any claim of a subcontractor, materialman or workman hereunder;

B. Written notice within five days of the institution of an action by a subcontractor, materialman or workman hereunder.

The sureties shall not pay the claim of any subcontractor, materialman or workman hereunder until the expiration of thirty days after receipt by said General Counsel of notice under either subparagraph A or B above, describing the claim to be paid.

IN WITNESS WHEREOF, the principal and the sureties have hereunto set their hands and seals, and such of them as are corporations have caused their corporate seals to be hereto affixed and these presents to be signed by their proper officers, the day and year first set forth above.

_____

Principal

(Seal)

By_____

_____

Surety

By _____

APPROVED AS TO ACCEPTABILITY OF SURETIES:

_____

Credit Manager _____2008

ACKNOWLEDGMENT OF PRINCIPAL, IF A CORPORATION

State of _____
_____ SS:
County of _____

On this _____ day of _____, 2008, before me personally came and appeared _____, to me known, who being by me duly sworn, did depose and say that he resides at _____; that he is the _____ of _____ the corporation described in and which executed the foregoing instrument; that he knows the seal of said corporation; that one of the seals affixed to said instrument is such seal; that it was so affixed by order of the directors of said corporation, and that he signed his name thereto by like order.

(Seal) _____.

ACKNOWLEDGMENT OF PRINCIPAL, IF A PARTNERSHIP

State of _____
_____ SS:
County of _____

On this _____, day of _____, 2008, before me personally came and appeared _____, to me known, and known to me to be one of the members of the firm of _____ described in and who executed the foregoing instrument and he acknowledged to me that he executed the same as and for the act and deed of said firm.

(Seal) _____.

ACKNOWLEDGMENT OF PRINCIPAL, IF AN INDIVIDUAL

State of _____

_____ SS:

County of _____

On this _____ day of _____, 20 , before me personally came and appeared _____, to me known and known to me to be the person described in and who executed the foregoing instrument and he acknowledged to me that he executed the same.

(Seal) _____

AFFIX ACKNOWLEDGMENT AND JUSTIFICATION OF SURETY

PERFORMANCE AND PAYMENT BOND

* If the Authority shall in its sole discretion so elect at the time of accepting the Contractor's Proposal, the Contractor shall require the general contractor(s) to which the Contractor subcontracts the construction portion of the Contract to furnish a bond for the faithful performance of all construction obligations imposed upon such general contractor(s) pursuant to such subcontract(s). Such bond, if so required, shall be in such form and sum as are required by the Authority (not to exceed that portion of the Contract constituting construction) and such bond shall be signed by one or more sureties satisfactory to the Authority.

At any time after the opening of Proposals, the Authority may give notice to one or more proposers to advise the Authority as to the names of their proposed sureties. Within forty-eight hours thereafter each proposer so notified shall so advise the Authority. The giving of such notice to a proposer shall not be construed as an acceptance of his Proposal, and omission to give such notice shall not be construed as an election by the Authority not to require a bond.

If the Authority elects to require the foregoing bond from the general contractor(s), the Contractor shall deliver such bond to the Authority within fifteen (15) business days after the execution and delivery by the general contractor(s) of the subcontract(s) with the Contractor, but in no event later than thirty (30) days following receipt by the Contractor of the acceptance of his Proposal, and Proposal, and the sureties thereon shall be as proposed by him provided, that if the Authority has theretofore given notice to him that his proposed sureties or any of them are not satisfactory, the bond shall be executed by other sureties satisfactory to the Authority.

The Authority shall give notice to the Contractor within ten (10) days after receipt of the foregoing bond as to whether or not such bond is satisfactory.

In the event of a default by the Contractor in his obligation to furnish a satisfactory bond on behalf of his general contractor within the time period referenced above, such default shall entitle the Authority in its discretion to terminate this Contract at any time within forty-five (45) days after the acceptance of the Proposal, without any liability on the part of the Authority. Inasmuch as the damages to the Authority resulting from a termination by it upon the failure of the Contractor to furnish a satisfactory bond will include items whose accurate amount will be difficult or impossible to compute, such damages shall be liquidated in the sum of the following amounts:

A. The excess, if any, of the Estimated Total Contract Price in the Proposal finally accepted over that in the Proposal of the Contractor; and

B. The expense of such new advertisement of the Contract, if any, as may be deemed necessary by the Authority; and

C. The sum of $500 for each day after the receipt by the Contractor of the acceptance of his Proposal that the performance of the Contract is not commenced by reason of the failure of the Contractor to furnish the required bond.

In the recovery of the damages above specified, the Authority may proceed against the sum represented by the certified check deposited with it or against the Bid Bond and take such other action, as it may deem best in the public interest.

If the Contractor furnishes a bond in accordance with the requirements of the Authority under this numbered clause, the Authority shall reimburse the Contractor for the net amount actually paid by him to the surety or sureties as the premium on such bond. The Contractor shall deliver to the Engineer receipts from the surety or sureties evidencing such payment and the amount thereof. Within fifteen days after receipt of such evidence satisfactory to the Engineer, the Authority shall pay to the Contractor by check the amount provided in this numbered clause.

If at any time the Authority shall be or become dissatisfied with any surety or sureties then upon any bond furnished in accordance with the requirements of the Authority, or if for any other reason such bond shall cease to be adequate security to the Authority, the Contractor shall, within fifteen (15) business days after notice from the Authority so to do, substitute a new bond in such form and sum and signed by such other sureties as may be necessary in the opinion of the Authority to constitute adequate security.

THIS AGREEMENT SHALL NOT BE BINDING UPON THE PORT AUTHORITY UNTIL DULY EXECUTED BY AN EXECUTIVE OFFICER THEREOF AND DELIVERED TO THE LESSEE AND LICENSEE BY AN AUTHORIZED REPRESENTATIVE OF THE PORT AUTHORITY

Lease No. -
Newark Liberty Airport

CONSENT TO LICENSE AGREEMENT

THIS AGREEMENT, made as of 20 , by and among THE PORT AUTHORITY OF NEW YORK AND NEW JERSEY (hereinafter called "the Port Authority), a body corporate and politic, created by Compact between the States of New Jersey and New York, with the consent of the Congress of the United States of America and having an office at 225 Park Avenue South, in the Borough of Manhattan, City, County and State of New York, and

(hereinafter called "the Lessee") and

(hereinafter called the "Licensee") a corporation organized and existing under the laws of having an office at

, whose representative is

WITNESSETH, That:

WHEREAS, the Port Authority and the Lessee have heretofore entered into an agreement of lease identified above by Port Authority Lease Number (which agreement of lease, dated as of , 20 , as the same may have been supplemented and amended, is hereinafter called "the Lease") covering premises at Newark Liberty Airport (hereinafter referred to as "the Airport"); and

WHEREAS, pursuant to the applicable provisions of the Lease, the Lessee and the Licensee have entered into a license agreement, a copy of which is attached hereto and made a part hereof (hereinafter called "the License Agreement") granting permission to the Licensee to use and occupy all or a portion of the premises under the Lease (such portion being hereinafter referred to as "the licensed premises") to operate a multi-fuel vehicle service station and towing service and the Lessee has requested the consent of the Port Authority to the Lessee entering into the License Agreement; and

WHEREAS, the Port Authority is willing to consent thereto on certain terms and conditions as hereinafter set forth;

NOW, THEREFORE, for and in consideration of the covenants and mutual agreements herein contained, the Port Authority, the Lessee and the Licensee hereby agree as follows:

1. On the terms and conditions hereinafter set forth, the Port Authority consents to the License Agreement.

2. Notwithstanding any provision of the License Agreement to the contrary, both this Consent and the License Agreement shall terminate, without notice to the Lessee or the Licensee, on the day preceding the earliest to occur of the dates of expiration, revocation or earlier termination of the Lease, or on the date of the expiration or earlier termination of the License Agreement, on the effective date of any revocation of this Consent by the Port Authority or on such earlier date as the Lessee and the Licensee may agree upon. The Licensee shall cease its use and occupancy of the licensed premises and shall quit such area and remove its property and property for which it is responsible therefrom on or before the expiration or earlier revocation or termination of the period of the permission granted with respect to the use thereof.

3. If the Lessee shall at any time be in default under the Lease, the Licensee shall on demand of the Port Authority pay directly to the Port Authority any rental, fee or other amount due to the Lessee. No such payment shall relieve the Lessee from any obligation under the Lease or under this Consent or affect the Port Authority's rights and remedies thereunder, but all such payments shall be credited against the obligations of the Lessee or of the Licensee, as the Port Authority may determine for each payment or part thereof.

4. In any case of any difference between the provisions of the Lease or this Consent and those of the License Agreement, the provisions of the Lease or of this Consent, as the case may be, shall be controlling, it being the intention of the Port Authority merely to permit the exercise of the Lessee's rights (to the extent permitted by the License Agreement and this Consent) by the Licensee and not to enlarge or otherwise change the rights granted by the Lease. All of the terms, provisions, covenants and conditions of the Lease shall be and remain in full force and effect. No alterations to the licensed premises shall be made under the License Agreement or otherwise without the prior written approval of the Port Authority.

5. Neither this Consent nor anything contained herein nor the consent granted hereunder shall constitute or be deemed to constitute a consent to, nor shall they create an inference or implication that there has been consent to, any enlargement, variation or change in the rights and privileges granted to the Lessee under the Lease, nor consent to the granting or conferring any rights, powers or privileges to the Licensee as may be provided by the License Agreement if not granted to the Lessee under the Lease, nor shall they impair or affect any of the duties, liabilities and obligations imposed on the Lessee under the Lease. The License Agreement is an agreement between the Lessee and the Licensee with respect to the various matters set forth therein. Neither this Consent nor anything contained herein nor the consent granted hereunder shall constitute an agreement between the Port Authority and the Lessee that the provisions of the License Agreement shall apply and pertain as between the Lessee and the Port Authority, it being understood that the terms, provisions, conditions and agreements of the Lease shall, in all respects, be controlling, effective and determinative. The specific mention of or reference to the Port Authority in any part of the License Agreement, including without limitation thereto any mention of any consent or approval of the Port Authority now or hereafter to be obtained, shall not be or be deemed to create an inference that the Port Authority has granted its consent or approval thereto under this Consent or shall hereafter grant its consent or approval thereto or that the subject matter as to which the consent or approval applies has been or shall be approved or consented to in principle or in fact or that the Port Authority's discretion as to granting any such consents or approvals shall in any way be affected or impaired. The lack of any specific reference in any provision of the License Agreement to Port Authority approval or consent shall not be deemed to imply that no such approval or consent is required.

No provisions of the License Agreement, including but not limited to those imposing obligations on the Licensee with respect to laws, rules, regulations, taxes, assessments and liens, shall be construed as a submission or admission by the Port Authority that the same could or does lawfully apply to the Port Authority, nor shall the existence of any provision of the License Agreement covering action which may be undertaken by the Lessee or the Licensee including but not limited to those involving signs, construction, insurance, assignment and subletting, be deemed to imply or infer that Port Authority consent or approval thereto has or will be given or that Port Authority discretion with respect thereto will in any way be affected or impaired. References in this Paragraph to specific matters and provisions as contained in the License Agreement shall not be construed as indicating any limitation upon the rights of the Port Authority with respect to its discretion as to granting or withholding approvals or consents as to other matters and provisions in the License Agreement which are not specifically referred to herein.

6. The Licensee, in its operations under or in connection with the License Agreement and its use of the licensed premises, agrees to assume, observe, be bound by and comply with all the terms, provisions, covenants and conditions of the Lease. Without limiting the generality of the foregoing, the Licensee shall use the licensed premises as a multi-fuel vehicle service station and towing service and for no other purpose whatsoever.

7. (a) Without in any wise affecting the obligations of the Lessee under the Lease and under this Consent and notwithstanding the terms and provisions of the License Agreement, the Licensee shall make repairs and replacements as if it were the Lessee under the Lease. In addition, the Licensee shall indemnify and hold harmless the Port Authority, its Commissioners, officers, employees and representatives from and against (and shall reimburse the Port Authority for its costs and expenses including attorney's fees and other legal expenses incurred in connection with the defense of) all claims and demands of third persons including but not limited to claims and demands for death, for personal injuries and for property damages, arising out of a breach or default of any term or provision of this Consent by the Licensee or out of its operations under the License Agreement or at the licensed premises, or out of the use or occupancy of the licensed premises by the Licensee or by others with its consent, or out of any other acts or omissions of the Licensee, its officers, employees, agents, representatives, contractors, customers, guests, invitees and others who are doing business with the Licensee at the licensed premises, or out of any other acts or omissions of the Licensee, its officers and employees at the Airport, including claims and demands of the City of Newark (hereinafter "the City") from which the Port Authority derives its right in the Airport, for indemnification, arising by operation of law or pursuant to the Basic Lease (as defined in the Lease) whereby the Port Authority has agreed to indemnify the City against claims. However, all acts and omissions of the Licensee shall be deemed to be acts and omissions of the Lessee under the Lease and the Lessee shall also be severally responsible therefor, including but not limited to the obligations of indemnification, repair and replacement.

(b) If so directed, the Licensee shall at its own expense defend any suit based upon any such claim or demand (even if such suit, claim or demand is groundless, false or fraudulent), and in handling such it shall not, without obtaining express advance permission from the General Counsel of the Port Authority, raise any defense involving in any way the jurisdiction of the tribunal over the person of the Port Authority, the immunity of the Port Authority, its

Commissioners, officers, agents or employees, the governmental nature of the Port Authority, or the provisions of any statutes respecting suits against the Port Authority.

(c) In addition to the insurance required to be maintained by the Lessee under the Lease, the Licensee during the period the License Agreement shall remain in effect shall in its own name as insured and including the Port Authority, the Lessee and the City as additional insureds obtain, maintain and pay the premiums on a policy or policies of commercial general liability insurance, including, but not limited to products liability, premises-operations and completed operations, and covering bodily injury, including death, and property damage liability, and garage liability (with automobile hazard 2 coverage), garage keepers legal liability, none of the foregoing to contain care, custody or control exclusions (endorsed to include all risks of physical loss and damage including lift collision coverage and collision upset coverage in limits sufficient to cover vehicles and other property in the care, custody and control of the Lessee), and comprehensive automobile liability insurance covering owned. non-owned and hired vehicles, and including automatic coverage for newly-acquired vehicles, and all applicable requirements for underground storage tanks including the Federal Financial Responsibility Requirements, in limits not less than $2,000,000 combined single limit per occurrence for bodily injury and property damage liability. Such policy or policies shall include Environmental Impairment Liability insurance coverage in limits not less than $2,000,000 combined single limit per occurrence. All the aforesaid policy or policies of insurance shall also provide or contain an endorsement providing that the protections afforded the Licensee thereunder with respect to any claim or action against the Licensee by a third person shall pertain and apply with like effect with respect to any claim or action against the Licensee by the Port Authority, the Lessee, the City or any two or all of them, but such endorsement shall not limit, vary, change or affect the protections afforded the Port Authority, the Lessee and the City as additional insureds. In addition, the insurance required hereunder shall provide or contain an endorsement providing that the protections afforded the Port Authority, the Lessee, the City or any two or all of them, thereunder as additional insureds with respect to any claim or action against the Port Authority or the Lessee, or both, by the Licensee shall be the same as the protections afforded the Licensee thereunder with respect to any claim or action against the Licensee by a third person as if the Port Authority and the Lessee were the named insureds thereunder. Further, the said policy or policies of insurance shall also provide or contain a contractual liability endorsement covering the obligations assumed by the Licensee under subparagraphs (a) and (b) hereof.

Without limiting the provisions hereof, in the event the Licensee maintains the foregoing insurance in limits greater than aforesaid the Port Authority shall be included therein as an additional insured to the full extent of all such insurance in accordance with all the terms and provisions hereof.

All insurance coverages and policies required under this Paragraph may be reviewed by the Port Authority for adequacy of terms, conditions and limits of coverage at any time and from time to time during the period the License Agreement remains in effect. The Port Authority at any such time may make additions, deletions, amendments to or modifications of the above-scheduled insurance requirements, including an increase in such minimum limits, and may require such other and additional insurance, in such amounts or against such other insurable hazards, as the Port Authority may deem advisable and the Licensee shall promptly comply therewith.

(d) As to the insurance required by the provisions of this Paragraph, a certified copy of the policies or a certificate or certificates or binders satisfactory to the Port Authority evidencing the existence thereof, shall be delivered by the Lessee to the Port Authority within fifteen (15) days after delivery of this Consent to the Port Authority. Each policy, certificate or binder delivered as aforesaid shall bear the endorsement of or be accompanied by evidence of payment of the premium thereon. In the event a binder is delivered, it shall be replaced within thirty (30) days by a certified copy of the policy or a certificate. Each such copy or certificate shall contain a valid provision or endorsement, unqualifiedly committing the insurer not to cancel, terminate, change or modify the policy without giving thirty (30) days' written advance notice thereof to the Port Authority. Each such copy or certificate shall contain an additional endorsement providing that the insurance carrier shall not, without obtaining express advance permission from the General Counsel of the Port Authority, raise any defense involving in any way the jurisdiction of the tribunal over the person of the Port Authority, the immunity of the Port Authority, its Commissioners, officers, agents or employees, the governmental nature of the Port Authority or the provisions of any statutes respecting suits against the Port Authority. Any renewal policy shall be delivered to the Port Authority at least thirty (30) days prior to the expiration of each expiring policy, except for any policy expiring after the date of expiration of the License Agreement. The aforesaid insurance shall be written by a company or companies approved by the Port Authority. If at any time any of the insurance policies shall be or become unsatisfactory to the Port Authority as to form or substance or if any of the carriers issuing such policies shall be or become unsatisfactory to the Port Authority, the Licensee shall promptly obtain a new and satisfactory policy in replacement thereof. If the Port Authority at any time so requests, a certified copy of each of the policies shall be delivered to the Port Authority.

8. (a) The Licensee agrees that it will conduct a first-class operation, will furnish all fixtures, equipment, personnel (including licensed personnel as necessary or as required by law), supplies, materials and other facilities and replacements necessary or proper therefor and shall maintain its fixtures, equipment and personal property in the licensed premises in first-class operating order, condition and appearance at all times, making all repairs and replacements necessary therefor, regardless of the cause of the condition necessitating any such repair or replacement.

(b) Nothing herein contained shall relieve the Lessee of its obligations to secure the Port Authority's written approval before permitting the Licensee to install any fixtures in or upon or making any alterations, decorations, additions or improvements in the licensed premises.

9. The Licensee shall daily remove from the Airport by means of facilities provided by the Licensee all garbage, debris and other waste material arising out of or in connection with its operations.

10. This Agreement and the consent granted hereunder may be revoked at any time by the Port Authority without cause on thirty (30) days' notice to the Lessee and the Licensee and no such revocation shall be deemed to affect the Lease or the continuance thereof, but the permission granted the Licensee with respect to the use and occupancy of the licensed premises and the License Agreement shall be deemed terminated thereby and upon such termination the Lessee shall cause the Licensee to be removed from the licensed premises.

11. The granting of this Consent by the Port Authority shall not be deemed to operate as a waiver of the rights of the Port Authority, or of the requirement for consent to any subsequent license agreement (by the Lessee or by the Licensee) or to any assignment of the Lease, of the License Agreement or of any rights under either of them, whether in whole or in part.

12. References herein to the "*Lessee*" or the "*Licensee*" shall mean and include each of the Lessee and the Licensee, their respective officers, agents, employees and also others at the licensed premises or the Airport with the consent of either the Lessee or the Licensee.

13. The Lessee and the Licensee hereby represent to the Port Authority that they have complied with and will comply with all laws, governmental rules, regulations and orders which as a matter of law are applicable to or which affect the operations of the Lessee and the Licensee under the Lease or its or their use of the licensed premises. The obligation of the Lessee and the Licensee hereunder to comply with governmental requirements is provided herein for the purpose of assuring proper safeguards for the protection of persons and property. Such provision is not to be construed as a submission by the Port Authority to the application to itself of such requirements or any of them.

14. The Licensee assures that it will undertake an affirmative action program as required by 14 CFR Part 152, Subpart E to insure that no person shall on the grounds of race, creed, color, national origin, or sex be excluded from participating in any employment activities covered in 14 CFR Part 152, Subpart E. The Licensee assures that no person shall be excluded on these grounds from participating in or receiving the services or benefits of any program or activity covered by such subpart. The Licensee assures that it will require that its covered suborganizations provide assurances to the Licensee that they similarly will undertake affirmative action programs and that they will require assurances from their suborganizations, as required by 14 CFR Part 152, Subpart E, to the same effect.

15. The License Agreement shall not be changed, modified or extended except by written instrument duly executed by the parties thereto and only with the express prior written consent of the Port Authority.

16. Neither the Commissioners of the Port Authority nor any of them, nor any officer, agent or employee thereof shall be held personally liable to the Lessee or to the Licensee under any term or provision of this Consent or because of its execution or because of any breach or alleged breach thereof.

IN WITNESS WHEREOF, the Port Authority, the Lessee and the Licensee have executed these presents.

ATTEST:

THE PORT AUTHORITY OF NEW YORK AND NEW JERSEY

_____
Secretary

By_____

Title_____
(Seal)

ATTEST:

_____
Secretary

By_____

Title_____President
(Corporate Seal)

ATTEST;

_____
Secretary

By_____

Title_____President
(Corporate Seal)

(Port Authority Acknowledgment)

STATE OF NEW YORK)
)ss.:
COUNTY OF NEW YORK)

On the day of in the year 20 before me, the undersigned, a Notary Public in and for said state, personally appeared
personally known to me or proved to me on the basis of satisfactory evidence to be the individual whose name is subscribed to the within instrument and acknowledged that he executed the same in his capacity as for
the Port Authority of New York and New Jersey, and that by his signature on the instrument, the individual, or the corporation upon behalf of which the individual acted, executed the instrument.

(Seal or Stamp) _____
(Signature of Notary Public)

(Permittee Acknowledgment)

STATE OF)
)ss.:
COUNTY OF)

On the day of in the year 200 before me, the undersigned, a Notary Public in and for said state, personally appeared
personally known to me or proved to me on the basis of satisfactory evidence to be the individual whose name is subscribed to the within instrument and acknowledged that he executed the same in his capacity as for
the Port Authority of New York and New Jersey, and that by his signature on the instrument, the individual, or the corporation upon behalf of which the individual acted, executed the instrument.

(Seal or Stamp) _____
(Signature of Notary Public)

(Licensee Acknowledgment)

STATE OF)
)ss.:
COUNTY OF)

On the day of in the year 200 before me, the undersigned, a Notary Public in and for said state, personally appeared
personally known to me or proved to me on the basis of satisfactory evidence to be the individual whose name is subscribed to the within instrument and acknowledged that he executed the same in his capacity as for
the Port Authority of New York and New Jersey, and that by his signature on the instrument, the individual, or the corporation upon behalf of which the individual acted, executed the instrument.

(Seal or Stamp) _____
(Signature of Notary Public)

SCHEDULE A

The Lessee shall pay the rental at the rate stated in paragraph (a) of Section 4 of the Agreement to which this Schedule is attached (which Agreement is hereinafter sometimes called "the Lease"), until the said rate is adjusted as hereinafter provided. After the close of calendar year 1991 and after the close of each calendar year thereafter, the Port Authority will adjust the Airport Services Factor of the annual rate of rental specified in paragraph (a) of Section 4 of the Lease, upwards or downwards, as follows:

I. The Port Authority shall determine the total of the following major elements of costs actually incurred or accrued during the calendar year for which the adjustment is being made, in connection with Airport Services:

(a) Fixed charges on Port Authority investment in Airport Services.

(b) The Port Authority's cost of direct labor, materials, payments to contractors and suppliers and other costs for operation, maintenance, repairs and replacements charged directly to Airport Services, and the pro rata share of the cost of snow and ice removal; such costs, however, to exclude those charged to Port Authority non-revenue producing areas.

(c) The Port Authority's cost of direct labor, materials, payments to contractors and suppliers and other costs charged directly to Policing and Traffic functions at the Airport (whether performed by the Airport Police Section or such other Sections or other Port Authority organization unit or units as may hereafter perform the same or similar functions).

(d) The Port Authority's cost of labor, which was charged directly to the Airport Manager's Office (or such other Port Authority office or organization unit or units as may hereafter from time to time perform the same or similar functions).

II. The Port Authority shall also determine during the calendar year for which the adjustment is being made the percentage of total developed land area at the Airport occupied by the Lessee s premises.

III. The Port Authority will multiply the Airport Services Factor as stated in paragraph *(a)* of Section 4 of the Lease by a fraction the numerator of which shall be the total of the major elements of costs actually incurred or accrued as determined under Paragraph I, subparagraphs (a) through (d) above and the denominator of which shall be the total of the major elements of costs actually incurred or accrued as determined for the year prior to the year for which the adjustment is being made (for the calendar year 2007 adjustment, it is hereby agreed said denominator shall be $84,845,423); and the resulting product shall be multiplied by a fraction the numerator of which shall be the percentage determined in Paragraph II above and the denominator of which shall be the actual percentage of total developed land area occupied by the *Lessee's* premises determined *for the year prior to the year for which the adjustment* is being made (for the calendar year 2007 adjustment, it is hereby agreed said denominator shall be 0.078%).

IV. The resultant product shall constitute the final Airport Services Factor for the calendar year for which the adjustment is being made. It shall also constitute the tentative Airport Services Factor for the calendar year in which such factor is calculated. The final Airport Services Factor shall be the amount due and payable by the Lessee to the Port Authority for the calendar year so adjusted and for the months, which have elapsed since the end of that calendar year. The Lessee shall continue to make payments based on the new tentative Airport Services Factor until the same is further adjusted.

V. In the event more than one Airport Services Factor is in effect during the calendar year for reasons other than the adjustment pursuant to Paragraph IV hereof, the Port Authority will multiply each such Airport Services Factor by the fractions stated in Paragraph III above, except that the percentage to be used as the denominator of the second of the said fractions shall be the percentage in effect at the same time as each such Airport Services Factor is in effect.

VI. In the event more than one Airport Services Factor is in effect during a calendar year for reasons other than the adjustment pursuant to Paragraph IV hereof, resulting in more than one resultant product after the adjustments pursuant to Paragraph V hereof have been made, the resultant product of that adjustment involving the Airport Services Factor in effect at the end of the calendar year for which the adjustment is being made shall constitute the final Airport Services Factor for the portion of said calendar year during which said Airport Services Factor was in effect It shall also constitute !;he tentative Airport Services Factor for the calendar year in which such factor is calculated. All other resultant products shall each constitute the final Airport Services Factor for that portion of the calendar year for which the adjustment is being made during which the respective tentative Airport Services Factor was in effect.

VII. Any deficiency in the rentals and fees due to the Port Authority from the Lessee for any calendar year resulting from the adjustment of the Airport Services Factor of the rentals shall be paid to the Port Authority by the Lessee within thirty (30) days after demand thereof and any excess payments made by the Lessee determined on the basis of an adjusted Airport Services Factor shall be credited against future rentals or refunded to the Lessee if no future rentals shall be due under this Agreement, such credit or refund to be made within thirty (30) days following the adjustment of the Airport Services Factor.

VIII. The following terms, when used in the Lease, shall, unless the context shall require otherwise, have the respective meanings given below:

(a) "Airport Services" for the purpose of the Lease shall mean such systems, non-revenue producing areas, operations and functions as may be related to serving the Airport from time to time during the term of the letting including without limitation thereto, air terminal highways (as so designated by the Port Authority from time to time), communications and signals, storm and sanitary sewers, water distribution, and other systems designed to provide utilitarian services to Airport areas, restricted use service highways, non-revenue producing space in structures, facilities, areas or subdivisions thereof necessary to the operations of the Port Authority administrative, maintenance, policing and operations space.

(b) "Total Developed Land Square Feet on the Airport" shall mean all land within the Airport boundary as the same may be changed from time to time (exclusive, however, of land situated to the north and west of United States Routes 1-9) which is revenue-producing, including but not limited to, all land under lease or permit, land actually developed for a specific use and all land specifically designated as part of the Public Aircraft Facilities.

(c) "Port Authority Investment" as used for the computation of fixed charges shall consist of:

A. Construction costs

(1) payments to contractors and/or vendors and suppliers;

(2) premiums or charges for Performance Bonds;

(3) insurance premiums or charges;

(4) direct payroll and expenses of Port Authority forces engaged in performance or supervision of construction work, charged in accordance with Port Authority accounting practice.

B. Engineering Services

(1) payments to outside consultants and engineering firms;

(2) direct payroll and expenses of Port Authority staff, charged in accordance with Port Authority accounting practice.

C. Land acquisition costs and the cost of acquisition of any interest therein, including air rights whether by purchase, lease, condemnation or other taking for a purpose, use or otherwise.

D. Other direct costs charged in accordance with Port Authority accounting practice.

E. Liquidated overhead in lieu of the Port Authority's administration and overhead costs in the amount of ten percent (10%) of the sum of all other elements of cost included in Port Authority investment (including Financial Expense, "F" below).

F. Financial Expense on the foregoing computed in accordance with Port Authority accounting practice.

(d) "Fixed charges on Port Authority investment" shall mean amortization and interest on Port Authority investment in items completed subsequent to December 31, 1964. Such fixed charges shall be determined on the basis of an equal annual payment method. The interest factor used in determining the fixed charges for all of the foregoing shall be the weighted average coupon rate for the twelve months ending November 30 of each year, rounded to the nearest hundredth percent, on all long-term bonds outstanding, the proceeds of which were made available for construction at the Airport

(e) The symbol "%" and the words "percentum" and "percent" whenever used herein or in the Agreement shall be deemed to be used synonymously and interchangeably.

IX. The Port Authority and the Lessee hereby agree that the Phase 1A Costs, as defined in Section 67 of the Lease, shall not be included in any calculation under this Schedule A. All costs for construction, repair, maintenance, modification and operation of the Phase 1A Roadway not included in the Phase 1A Costs shall be included hereunder.

Initialled:

For the Port Authority

For the Lessee

SCHEDULE E

AFFIRMATIVE ACTION-EQUAL OPPORTUNITY---MINORITY BUSINESS ENTERPRISES —WOMEN-OWNED BUSINESS ENTERPRISES REQUIREMENTS

Part I. Affirmative Action Guidelines - Equal Employment Opportunity

Without limiting any of the terms and conditions of the Lease between The Port Authority of New York and New Jersey (the "*Port Authority*") and GAZ REALTY INC. ("*the Lessee*") under Lease No. ANB-862 (the "*Lease*"), the Lessee understands and agrees that it shall put into effect prior to the commencement of any construction work (including but not limited to any work under a Tenant Alteration Application) an affirmative action program and Minority Business Enterprise (MBE) program and Women-owned Business Enterprise (WBE) program in accordance with the provisions of this Schedule E. As used in this Schedule E the term "*construction work*" shall be deemed to include also any and all construction work and/or alteration work under each Tenant Alteration Application. The provisions of this Schedule E shall be applicable to the Lessee's contractor or contractors and subcontractors at any tier of construction as well as to the Lessee itself and the Lessee shall include the provisions of this Schedule E within all of its construction contracts so as to make said provisions and undertakings the direct obligation of the construction contractor or contractors and subcontractors at any tier of construction. The Lessee shall and shall require its said contractor, contractors and subcontractors to furnish to the Port Authority such data, including but not limited to compliance reports relating to the operation and implementation of the affirmative action, Minority Business Enterprise (MBE) and Women-owned Business Enterprise (WBE) programs called for hereunder as the Port Authority may request at any time and from time to time regarding the affirmative action, Minority Business Enterprises (MBE) and Women-owned Business Enterprises (WBE) programs of the Lessee and its contractor, contractors, and subcontractors at any tier of construction, and the Lessee shall and shall also require that its contractor, contractors and subcontractors at any tier of construction make and put into effect such modifications and additions thereto as may be directed by the Port Authority pursuant to the provisions hereof and this Schedule E to effectuate the goals of affirmative action and Minority Business Enterprise (MBE) and Women-owned Business Enterprise (WBE) programs.

In addition to and without limiting any terms and conditions of the Lease, the Lessee shall provide in its contracts and all subcontracts covering the construction work or any portion thereof, that:

(aa) The contractor shall not discriminate against employees and applicants for employment because of race, creed, color, national origin, sex, age, disability or marital status, and shall undertake or continue existing programs of affirmative action to ensure that minority group persons are afforded equal employment opportunity without

discrimination. Such programs shall include, but not be limited to, recruitment, employment, job assignment, promotion, upgrading, demotion, transfer, layoff, termination, rates of pay or other forms of compensation, and selections for training or retraining, including apprenticeships and on-the-job training;

(bb) At the request of either the Port Authority or the Lessee, the contractor shall request such employment agency, labor union, or authorized representative of workers with which it has a collective bargaining or other Letter Agreement or understanding and which is involved in the performance of the contract with the Lessee to furnish a written statement that such employment agency, labor union or representative shall not discriminate because of race, creed, color, national origin, sex, age, disability or marital status and that such union or representative will cooperate in the implementation of the contractor's obligations hereunder;

(cc) The contractor will state, in all solicitations or advertisements for employees placed by or on behalf of the contractor in the performance of the contract, that all qualified applicants will be afforded equal employment opportunity without discrimination because of race, creed, color, national origin, sex, age, disability or marital status;

(dd) The contractor will include the provisions of subparagraphs (aa) through (cc) of this paragraph in every subcontract or purchase order in such a manner that such provisions will be binding upon each subcontractor or vendor as to its work in connection with the contract;

(ee) 'Contractor' as used herein shall include each contractor and subcontractor at any tier of construction.

I. As a matter of policy the Port Authority hereby requires the Lessee and the Lessee shall require the Contractor, as hereinafter defined, to comply with all of the provisions of this Schedule E, the foregoing provisions set forth above and the provisions set forth hereinafter in this Schedule E. The provisions set forth in this Part I are similar to the conditions for bidding on federal government contract adopted by the Office of Federal Contract Compliance and effective May 8, 1978.

The Lessee as well as each bidder, contractor and subcontractor of the Lessee and each subcontractor of a contractor at any tier of construction (herein collectively referred to as "the Contractor") must fully comply with the following conditions set forth herein as to each construction trade to be used on the construction work or any portion thereof (said conditions being herein called "Bid Conditions"). The Lessee hereby commits itself to the goals for minority and female utilization set forth below and all other requirements, terms and conditions of the Bid Conditions. The Lessee shall likewise require the Contractor to commit itself to the said goals for minority and female utilization set forth below and all other requirements, terms and conditions of the Bid Conditions by

submitting a properly signed bid.

II. The Lessee and the Contractor shall each appoint an executive of its company to assume the responsibility for the implementation of the requirements, terms and conditions of the following Bid Conditions:

(a) The goals for minority and female participation expressed in percentage terms for the Contractor's aggregate workforce in each trade on all construction work are as follows:

(1)	Minority participation	
	Minority, except laborers	30%
	Minority, laborers	40%
(2)	Female participation	
	Female, except laborers	6.9%
	Female, laborers	6.9%

These goals are applicable to all the Contractor's construction work performed in and for the premises.

The Contractor's specific affirmative action obligations required herein of minority and female employment and training must be substantially uniform throughout the length of the contract, and in each trade, and the Contractor shall make good faith efforts to employ minorities and women evenly on each of its projects. The transfer of minority or female employees or trainees from contractor to contractor or from project to project for the sole purpose of meeting the Contractor's goals shall be a violation of the contract. Compliance with the goals will be measured against the total work hours performed.

(b) The Contractor shall provide written notification to the Lessee and the Lessee shall provide written notification to the Manager of the Office of Business and Job Opportunity of the Port Authority within 10 working days of award of any construction subcontract in excess of $10,000 at any tier for construction work. The notification shall list the name, address and telephone number of the subcontractor; employer identification number; estimated starting and completion dates of the subcontract; and the geographical area in which the subcontract is to be performed.

(c) As used in these specifications:

(1) "Employer identification number" means the Federal Social Security number used on the Employer's Quarterly Federal Tax Return, U.S. Treasury Department Form 941:

(2) "Minority" includes:

(i) Black (all persons having origins in any of the Black African racial groups not of Hispanic origin);

(ii) Hispanic (all persons of Mexican, Puerto Rican, Dominican, Cuban, Central or South American culture or origin, regardless of race);

(iii) Asian and Pacific Islander (all persons having origins in any of the original peoples of the Far East, Southeast Asia, the Indian Subcontinent, or the Pacific Islands); and

(iv) American Indian or Alaskan Native (all persons having origins in any of the original peoples of North America and maintaining identifiable tribal affiliations through membership and participation or community identification).

(d) Whenever the Contractor, or any subcontractor at any tier, subcontracts a portion of the construction work involving any construction trade, it shall physically include in each subcontract in excess of $10,000 those provisions which include the applicable goals for minority and female participation.

(e) The Contractor shall implement the specific affirmative action standards provided in subparagraphs (1) through (16) of Paragraph (h) hereof. The goals set forth above are expressed as percentages of the total hours of employment and training of minority and female utilization the Contractor should reasonably be able to achieve in each construction trade in which it has employees in the premises. The Contractor is expected to make substantially uniform progress toward its goals in each craft during the period specified.

(f) Neither the provisions of any collective bargaining agreement, nor the failure by a union with whom the Contractor has a collective bargaining agreement, to refer either minorities or women shall excuse the Contractor's obligations hereunder.

(g) In order for the nonworking training hours of apprentices and trainees to be counted in meeting the goals, such apprentices and trainees must be employed by the Contractor during the training period, and the Contractor must have made a commitment to employ the apprentices and trainees at the completion of their training subject to the availability of employment opportunities. Trainees must be trained pursuant to training programs approved by the U.S. Department of Labor.

(h) The Contractor shall take specific affirmative actions to ensure equal employment opportunity ("EEO").

The evaluation of the Contractor's compliance with these provisions shall be based upon its good faith efforts to achieve maximum results from its actions. The Contractor shall document these efforts fully, and shall implement affirmative action

steps at least as extensive as the following:

(1) Ensure and maintain a working environment free of harassment, intimidation, and coercion at all Sites, and in all facilities at which the Contractor's employees are assigned to work. The Contractor, where possible, will assign two or more women to each Phase of the construction project. The Contractor, shall specifically ensure that all foremen, superintendents, and other supervisory personnel at the premises are aware of and carry out the Contractor's obligation to maintain such a working environment, with specific attention to minority or female individuals working at the premises.

(2) Establish and maintain a current list of minority and female recruitment sources, provide written notification to minority and female recruitment sources and to community organizations when the Contractor or its unions have employment opportunities available, and maintain a record of the organizations' responses.

(3) Maintain a current file of the names, addresses and telephone number of each minority and female off-the-street applicant and minority or female referral from a union, a recruitment source or community organization and of what action was taken with respect to each such individual. If such individual was sent to the union hiring hall for referral and was not referred back to the Contractor by union or, if referred, not employed by the Contractor, this shall be documented in the file with the reason therefor, along with whatever additional actions the Contractor may have taken.

(4) Provide immediate written notification to the Lessee when the union or unions with which the Contractor has a collective bargaining agreement has not referred to the Contractor a minority person or woman sent by the Contractor, or when the Contractor has other information that the union referral process has impeded the Contractor's efforts to meet its obligations.

(5) Develop on-the-job training opportunities and/or participate in training programs for the area which expressly include minorities and women, including upgrading programs and apprenticeship and training programs relevant to the Contractor's employment needs, especially those programs funded or approved by the Department of Labor. The Contractor shall provide notice of these programs to the sources compiled under subparagraph (2) above.

(6) Disseminate the Contractor's EEO Policy by providing notice of the policy to unions and training programs and requesting their cooperation in assisting the Contractor in meeting its EEO obligations; by including it in any policy manual and collective bargaining agreement; by publicizing it in the Contractor's newspaper, annual report, etc.; by specific review of the policy with all management personnel and with all minority and female employees at least once a year; and by posting the Contractor's EEO policy on bulletin boards accessible to all employees at each location where construction work is performed.

(7) Review, at least every six months the Contractor's EEO policy and affirmative action obligations hereunder with all employees having any responsibility for hiring, assignment, layoff, termination or other employment decision including specific review of these items with on-premises supervisory personnel such as Superintendents, General Foremen, etc., prior to the initiation of construction work at the premises. A written record shall be made and maintained identifying the time and place of these meetings, persons attending, subject matter discussed, and disposition of the subject matter.

(8) Disseminate the Contractor's EEO policy externally by including it in any advertising in the news media, specifically including minority and female news media, and providing written notification to and discussing the Contractor's EEO policy with other Contractors and Subcontractors with whom the Contractor does or anticipates doing business.

(9) Direct its recruitment efforts, both oral and written, to minority, female and community organizations, to schools with minority and female students and to minority and female recruitment and training organizations and to State-certified minority referral agencies serving the Contractor's recruitment area and employment needs. Not later than one month prior to the date for the acceptance of applications for apprenticeship or other training by any recruitment source, the Contractor shall send written notification to organizations such as the above, describing the openings, screening procedures, and tests to be used in the selection process.

(10) Encourage present minority and female employees to recruit other minority persons and women and, where reasonable, provide after school, summer and vacation employment to minority and female youth both on the premises and in areas of a Contractor's workforce.

(11) Tests and other selecting requirements shall comply with 41 CFR Part 60-3.

(12) Conduct, at least every six months, an inventory and evaluation at least of all minority and female personnel for promotional opportunities and encourage these employees to seek or to prepare for, through appropriate training, etc., such opportunities.

(13) Ensure that seniority practices, job classifications, work assignments and other personnel practices, do not have a discriminatory effect by continually monitoring all personnel and employment related activities to ensure that the EEO policy and the Contractor's obligations hereunder are being carried out.

(14) Ensure that all facilities and company activities are nonsegregated except that separate or single-user toilet and necessary changing facilities shall be provided to assure privacy between the sexes.

(15) Document and maintain a record of all solicitations of offers for subcontracts from minority and female construction contractors and suppliers, including circulation of solicitations to minority and female contractor associations and other business associations.

(16) Conduct a review, at least every six months, of all supervisors' adherence to and performance under the Contractors' EEO policies and affirmative action obligations.

(i) Contractors are encouraged to participate in voluntary associations which assist in fulfilling one or more of their affirmative action obligations (subparagraphs (1)-(16) of Paragraph (h) above). The efforts of a contractor association, joint contractor-union, contractor-community, or other similar group of which the Contractor is a member and participant, may be asserted as fulfilling any one or more of its obligations under Paragraph (h) hereof provided that: the Contractor actively participates in the group, makes good faith efforts to assure that the group has a positive impact on the employment of minorities and women in the industry, ensures that the concrete benefits of the program are reflected in the Contractor's minority and female workforce participation, makes good faith efforts to meet its individual goals and timetables, and can provide access to documentation which demonstrates the effectiveness of actions taken on behalf of the Contractor. The obligation to comply, however, is the Contractor's and failure of such a group to fulfill an obligation shall not be a defense for the Contractor's non-compliance.

(j) A single goal for minorities and a separate single goal for women have been established. The Contractor, however, is required to provide equal opportunity and to take affirmative action for all minority groups, both male and female, and all women, both minority and non-minority. Consequently, the Contractor may be in violation hereof if a particular group is employed in a substantially disparate manner (for example, even though the Contractor has achieved its goals for women generally, the Contractor may be in violation hereof if a specific minority group of women is underutilized).

(k) The Contractor shall not use the goals and timetables or affirmative action standards to discriminate against any person because of race, color, religion, sex or national origin.

(l) The Contractor shall not enter into any subcontract with any person or firm debarred from Government contracts pursuant to Executive Order 11246.

(m) The Contractor shall carry out such sanctions and penalties for violation of this clause including suspension, termination and cancellation of existing subcontracts as may be imposed or ordered by the Lessee. Any Contractor who fails to carry out such sanctions and penalties shall be in violation hereof.

(n) The Contractor, in fulfilling its obligations hereunder shall implement specific affirmative actions steps, at least as extensive as those standards prescribed in paragraph (h) hereof so as to achieve maximum results from its efforts to ensure equal employment opportunity. If the Contractor fails to comply with the requirements of these provisions, the Lessee shall proceed accordingly.

(o) The Contractor shall designate a responsible official to monitor all employment related activity to ensure that the company EEO policy is being carried out, to submit reports relating to the provisions hereof as may be required and to keep records. Records shall at least include for each employee the name, address, telephone numbers, construction trade, union affiliation if any, employee identification number when assigned, social security number, race, sex, status (e.g. mechanical apprentice, trainee, helper, or laborer), dates of changes in status, hours worked per week in the indicated trade, rate of pay, and location at which the work is performed. Records shall be maintained in an easily understandable and retrievable form; however, to the degree that existing records satisfy this requirement, contractors shall not be required to maintain separate records.

(p) Nothing herein provided shall be construed as a limitation upon the application of any laws which establish different standards of compliance or upon the application of requirements for the hiring of local or other area residents (e.g., those under the Public Works Employment Act of 1977 and the Community Development Block Grant Program).

(q) Without limiting any other obligation, term or provision under the Lease, the Contractor shall cooperate with all federal, state or local agencies established for the purpose of implementing affirmative action compliance programs and shall comply with all procedures and guidelines established or which may be established by the Port Authority.

PART II.

MINORITY BUSINESS ENTERPRISES/WOMEN-OWNED BUSINESS ENTERPRISES

As a matter of policy the Port Authority requires the Lessee and the Lessee shall itself and shall require the general contractor or other construction supervisor and each of the Lessee's contractors to use every good faith effort to provide for meaningful participation by Minority Business Enterprises (MBEs) and Women-owned Business Enterprises (WBEs) in the construction work pursuant to the provisions of this Schedule E. For purposes hereof, "Minority Business Enterprise" "(MBE)" shall mean any business enterprise which is at least fifty-one percentum owned by, or in the case of a publicly owned business, at least fifty-one percentum of the stock of which is owned by citizens or permanent resident aliens who are minorities and such ownership is real, substantial and continuing. For the purposes hereof, "Women-owned Business

Enterprise" "(WBE)" shall mean any business enterprise which is at least fifty-one percentum owned by, or in the case of a publicly owned business, at least fifty-one percentum of the stock of which is owned by women and such ownership is real, substantial and continuing. A minority shall be as defined in paragraph II(c) of Part I of this Schedule E. "Meaningful participation" shall mean that at least seventeen percent (17%) of the total dollar value of the construction contracts (including subcontracts) covering the construction work are for the participation of Minority Business Enterprises and Women-owned Business Enterprises, of which at least twelve percent (12%) are for the participation of Minority Business Enterprises. Good faith efforts to include meaningful participation by MBEs and WBEs shall include at least the following:

(a) Dividing the work to be subcontracted into smaller portions where feasible.

(b) Actively and affirmatively soliciting bids for subcontracts from MBEs and WBEs, including circulation of solicitations to minority and female contractor associations. The Contractor shall maintain records detailing the efforts made to provide for meaningful MBE and WBE participation in the work, including the names and addresses of all MBEs and WBEs contacted and, if any such MBE or WBE is not selected as a joint venturer or subcontractor, the reason for such decision.

(c) Making plans and specifications for prospective construction work available to MBEs and WBEs in sufficient time for review.

(d) Utilizing the list of eligible MBEs and WBEs maintained by the Port Authority or seeking minorities and women from other sources for the purpose of soliciting bids for subcontractors.

(e) Encouraging the formation of joint ventures, partnerships or other similar arrangements among subcontractors, where appropriate, to insure that the Lessee and Contractor will meet their obligations hereunder.

(f) Insuring that provision is made to provide progress payments to MBEs and WBEs on a timely basis.

(g) Not requiring bonds from and/or providing bonds and insurance for MBEs and WBEs, where appropriate.

Certification of MBEs and WBEs hereunder shall be made by the Office of Business and Job Opportunity of the Port Authority. If the Contractor wishes to utilize a firm not already certified by the Port Authority, it shall submit to the Port Authority a written request for a determination that the proposed firm is eligible for certification. This shall be done by completing and forwarding such form as may be then required by the Port Authority. All such requests shall be in writing addressed to the Office of Business and Job Opportunity, the Port Authority of New York and New Jersey, 225 Park

Avenue South, New York, New York 10003 or such other address as the Port Authority may specify by notice to the Lessee. Certification shall be effective only if made in writing by the Director in charge of the Office of Business and Job Opportunity of the Port Authority. The determination of the Port Authority shall be final and binding.

The Port Authority has compiled a list of the firms that the Port Authority has determined satisfy the criteria for MBE and WBE certification. This list may be supplemented and revised from time to time by the Port Authority. Such list shall be made available to the Contractor upon request. The Port Authority makes no representation as to the financial responsibility of such, firms, their technical competence to perform, or any other performance-related qualifications.

Only MBE's and WBE's certified by the Port Authority will count toward the MBE and WBE goals.

Please note that only sixty percent (60%) of expenditures to MBE or WBE suppliers will count towards meeting the MBE and WBE goals. However, expenditures to MBE or WBE manufacturer's (i.e. suppliers that produce goods from raw materials or substantially alter them before resale) are counted dollar for dollar.

For the Port Authority

Initialled:

For the Lessee

SCHEDULE F

LOCAL BUSINESS ENTERPRISES COMMITMENT

As a matter of policy the Port Authority hereby requires the Lessee and the Lessee shall require any Contractor utilized by the Lessee to perform construction work on the Premises to comply with the provisions set forth hereinafter in this Schedule F.

(1) The Lessee and each Contractor shall use every good faith effort to maximize the participation of Local Business Enterprises (LBEs) in all construction work on the Premises, including without limitation the Construction Work. In order to assure familiarity with the services and materials provided by LBEs, the Contractor shall attend such meetings as may be called by the General Manager of the Airport on LBEs and shall contact the Queens Air Services Development Office (ASDO), located at John F. Kennedy International Airport, Bldg. 80, First Floor, South Service Court, Jamaica, NY 11430 to obtain LBE Vendor Profiles and access ASDO's on-line vendor retrieval system (BASIS). The Port Authority has not checked the references, capabilities or financial background of the LBEs registered with the ASDO, but is referring the Contractor to the ASDO and BASIS solely for the purpose of advising Contractors of LBDs who may be interested in providing services and/or materials to the Contractor.

(2) Good faith efforts to include participation by LBEs in construction work shall include at least the following:

(i) Dividing the work to be subcontracted and services and materials to be procured into small portions, where feasible

(ii) Soliciting bids on portions of the work to be subcontracted and services and materials to be procured from LBE's registered with ASDO and such other LBEs as the Contractor deems appropriate.

(3) The Port Authority is committed to making employment opportunities available to local residents and expects that the Contractor will utilized LBEs.

(4) It is specifically understood and agreed that the requirements set forth herein for the participation of LBEs shall not alter, limit, diminish or modify any of the obligations under this Lease including, without limitation, the obligation to put into

effect the affirmative action program and the MBE and WBE programs in accordance with the provisions set forth above in Schedule E hereof.

For the Port Authority

Initialed:

For the Lessee

Schedule X

Towing	$125.00 per vehicle
Relocation of Vehicle via Flatbed	$ 80.00 per vehicle
Drop Fee	$ 75.00 per vehicle
Relocation of Vehicle	$ 40.00 per vehicle
Road Service (jump starts, lockouts, tire changes, lock deicing, fuel, etc.)	$ 25.00 per vehicle
Storage	
$ 15.00 per calendar day	

For the Port Authority

STATE OF NEW YORK)
)ss.
COUNTY OF NEW YORK)

On this 20th day of Oct, 2008, before me, the subscriber, a notary public of New York, personally appeared David Kagan the Assistant Director of The Port Authority of New York and New Jersey, who I am satisfied is the person who has signed the within instrument: and, I having first made known to him the contents thereof, he did acknowledge that he signed, sealed with the corporate seal and delivered the same as such officer aforesaid and that the within instrument is the voluntary act and deed of such corporation, made by virtue of the authority of the Board of Commissioners.

(notarial seal and stamp)

Marie M. Edwards
Notary Public, State of New York
No. 01ED4959693 Richmond
Qualified in ~~Kings~~ County
Commission Expires 2/09/2010

For Gaz Realty, Inc.

STATE OF New York)
)ss.
COUNTY OF Nassau)

On this 24 day of September, 2008, before me, the subscriber, a notary public of , personally appeared George Abizeid

the President of Gaz Realty Inc

who I am satisfied is the person who has signed the within instrument; and I having first made known to him the contents thereof, he did acknowledge that he signed, sealed with the corporate seal and delivered the same as such officer aforesaid and that the within instrument is the voluntary act and deed of such corporation, made by virtue of the authority of the Board of Directors.

(notarial seal and stamp)

MICHELLE VENTURA
Notary Public - State of New York
NO. 01VE6128903
Qualified in Nassau County
My Commission Expires 10/20/09

(Tenant Construction)

CONSTRUCTION ADDENDUM

Attached and made a part of that certain lease between GAZ Realty, Inc. (the "Landlord") and 7-Eleven, Inc. (the "Tenant") dated June 29, 2009. Unless expressly defined in this Construction Addendum, defined terms shall have the meaning described thereto in the Lease.

It is understood by the parties hereto that Tenant make alterations to the Premises and construct other improvements including but not limited to curb cuts and driveways, sidewalks and aprons (the Premises together with all other improvements shall be collectively defined as the "Improvements"), and in connection therewith Landlord does hereby authorize Tenant, at Tenant's discretion, to remove, demolish or otherwise dispose of the existing improvements at Tenant's sole cost and expense, and in consideration of Tenant's undertaking such construction or rebuilding, any and all sums for salvage derived therefrom shall be the property of Tenant. Tenant agrees at its expense to promptly make application for all permits necessary for the construction on the Premises of the Improvements and/or alterations, in conformity with the Site Plan and Tenant's plans and specifications. Such alterations and/or construction shall be at Tenant's sole cost and expense and shall be performed by Tenant in a good and workmanlike manner, free and clear of mechanics' and materialmen's liens. In the event Tenant is unable to obtain all permits and approvals required for such alterations or construction and for operation of its business on the Premises within the time period provided for in Article 23 of this Lease, Tenant shall have the option to terminate this Lease. Landlord agrees to cooperate with Tenant in meeting the requirements to obtain such permits. All such improvements by Tenant shall become the property of Landlord on the termination or expiration of this Lease.

Landlord represents and warrants that the Premises when delivered to Tenant shall be structurally sound and that there are no latent defects therein of which Landlord is, or has reason to be, aware. Any improvements or repairs to the Premises including, but not limited to, improvements or repairs to foundation, footings, load bearing walls or utilities provided to the Premises discovered to be necessary during Tenant's construction shall be completed by Landlord at Landlord's expense (unless caused by Tenant's negligence).

Landlord shall complete the work identified in the Division of Work Letter (the "Landlord's Work Letter") attached as Schedule I to this Construction Addendum. Should Landlord fail to comply with or perform any term or condition of this Construction Addendum, including, but not limited to, failure to complete the alterations and construction required under the Lease and/or identified in the Landlord's Work Letter to Tenant's sole satisfaction, Tenant may enforce specific performance of Landlord's covenants and agreements hereunder or may pursue any other available legal or equitable remedy. Notwithstanding anything to the contrary contained in the Lease, should Landlord fail for any reason whatsoever to complete the alterations and construction required under the Lease and/or identified in the Landlord's Work Letter to Tenant's sole satisfaction, Tenant may, at its option, elect to terminate the Lease.

Without Tenant's prior written consent, Landlord's title to or interest in the Premises or the Lease shall not be conveyed or assigned (except for collateral assignment in connection with the alteration and construction) until such time as all of Landlord's obligations described in this Construction Addendum shall have been satisfactorily performed and the Term commenced.

Landlord hereby agrees to assign to Tenant all assignable warranties and guarantees received in connection with the alterations and construction required under the Lease and/or identified in the Landlord's Work Letter and Landlord shall use its best efforts to enforce any nonassignable warranties and guarantees for the benefit of Tenant at Tenant's request.

The remedies afforded Tenant upon Landlord's default in the performance of Landlord's covenants and agreements in this Construction Addendum shall be in addition to those remedies set forth in Article 19 of the Lease. In no event shall the terms and conditions of this Construction Addendum limit or impair any of Landlord's remedies set forth in Article 20 of this Lease with respect to a default by Tenant.

Schedule I to Construction Addendum

Division of Work Letter

RE: Newark Airport
Lindbergh Rd. & Ramp
Newark, NJ 07114

DIVISION OF WORK FOR LANDLORD DELIVERABLES

The following is a brief outline of 7-Eleven, Inc. and Landlord Deliverables. The scope of work and specifications for these requirements will be provided upon Landlord providing details of existing conditions for each listed item and 7-Eleven's completion of their due-diligence.

[SEE ATTACHED]

RE: *Proposed 7-Eleven* *Location: Newark Airport #1020929*

DIVISION OF WORK FOR LANDLORD DELIVERABLES **Dated: 3-17-09**

The following is a brief outline of 7-Eleven, Inc. Landlord Deliverables. The scope of work and specifications for these requirements will be provided upon Landlord providing details of existing conditions for each listed item and 7-Eleven's completion of their due-diligence.

- **STRUCTURAL:** Landlord shall be responsible for the baseline structural integrity of the building and structures to be used by, surrounding, or affected by, 7-Eleven, their use, equipment and loading.
- **ROOF:** Landlord shall be responsible for maintaining the roof and building such that 7-Eleven's space and common areas remain watertight.
- **ENTRANCES, EGRESSES AND COMMON AREAS:** Landlord shall be responsible for maintaining all building entrances and egresses, including stairs, walkways, sidewalks, and common spaces. The tenant shall have control of some of the common area lighting To provide a safe environment for their customers
- **STOREFRONT:** Tenant shall provide at his expense, an aluminum and glass commercial grade store front (Kawneer or approved equal) with thermally broken frame and 1" thick insulated glass (minimum) in accordance with all required municipal codes. Tenant shall install a double 36" wide medium style door system with Tempered glass and heavy duty pivot hinges to meet or exceed 7-Eleven minimum prototype requirements.
- **FLOOR SLAB:** Landlord will provide Floor Slab.
- **SIGNAGE:** Tenant shall be allowed to install its standard signage package on building façade. Tenant shall be responsible for any applicable sign permits. Tenant shall get top position on any pylon signage.
- **ELECTRICAL SERVICE:** Landlord to provide 7-Eleven with a dedicated 600 amp, 120/208 volts, 3-phase, 4-wire electrical service to be located in 7-Eleven's space. Service to be brought to a MDP (main disconnect panel) with service disconnect.

  PHONE SERVICE Landlord to provide a conduit from phone room to tenant space.with a pull string for use by phone service provider to bring service to space
- **WATER SERVICE:** Landlord shall provide 7-Eleven with a dedicated water service and meter capable of providing 7-Eleven with a minimum flow of 20 gallons per minute at 40 psi. Service size and type shall be I" copper or PE. Service upgrades shall be the responsibility of the Landlord, the location shall be mutually agreed to between the Landlord and 7-Eleven. Details of existing service to be provided by Landlord including service type, size, age, condition, account number, configuration, anticipated upgrade requirements, flow test results and utility/plumbing plans. The Landlord to provide access to 7-Eleven and their contractor to investigate the adequacy of the service.
- **NATURAL GAS SERVICE:** Landlord shall provide 7-Eleven with a dedicated 2" gas service separately metered. – *if available*
- **STORM AND SANITARY SEWER SERVICE:** Landlord to provide sanitary waste disposal systems to accommodate unimpeded flows from 7-Eleven's restrooms, equipment and floor

drains as required by code and 7-Eleven's development plans. Minimum service size and slopes shall accommodate 20 gallons per minute sanitary waste flow. Location for connections to services to be identified by the Landlord on plans. Any modifications or tie-ins outside the demised space will be the Landlord's responsibility. Modifications, connections or disconnects of any roof or storm drains will be the responsibility of the Landlord.

- **HEATING/COOLING AND REFRIGERATION EQUIPMENT:** HVAC equipment will be furnished and installed to the Plenum by the Landlord at his expense. Total requirements are 240 SF per ton for cooling –with gas heat or heat pumps with auxiliary electric back-up which will be broken down into two system units. Tenant will be responsible for installing the ductwork at his expense. Train Units are recommended but not required.
- **FIRE PROTECTION SYSTEMS (SPRINKLERS), AND ALARMS AND BUILDING IMPROVEMENTS:** Landlord will be responsible for designing, permitting, connections, installations, testing and certifications of all fire alarm and central monitoring systems if required by applicable codes, laws, regulations and/or jurisdictional agencies. Landlord to provide: alarm plans, current fire alarm tests and certifications by licensed fire alarm and the contact information for the Landlord's alarm and central monitoring contractors. Cost to be shared proportionately as per building dimensions.
- **CHASE** Landlord to provide a enclosure between the tenant space and roof for the purpose Of running their refrigeration lines and electric to equipment on roof
- **DEMOLITION** Landlord to remove all product ,fixtures,and partitions based on a Walk-thru with 7-Eleven
- **PARKING LOT and EXTERIOR LIGHTING** Landlord to provide adequate lighting to Provide a safe environment for our customers 24hrs a day 7 days a week
- **DEMISING WALL** Landlord to provide a partition wall separating tenant space from all others. This is to be fire rated in compliance with all municipal,county and state codes
- **ON –SITE TRASH RECEPTACLES** Landlord to provide a common dumpster, which costs will be shared 50% LL and 50% Tenant enclosure for the exclusive use of tenant the enclosure is to be a minimum of 9' deep 18' wide with walls6' high and a pair of swing doors providing an opening of 18' The enclosure shall have a 6" slab of reinforced concrete with a 10' apron The enclosure must accommodate a trash and cardboard container. If this is not workable than the alternative is to be approved by 7-Eleven.

Landlord to permit tenant to use any existing trash facilities, if available

Date March 18, 2009

Accepted and agreed by Landlord
George Abi Zeid, President

FOR THE PORT AUTHORITY OF NEW YORK AND NEW JERSEY

STATE OF NEW YORK)
)ss.
COUNTY OF NEW YORK)

On the 17th day of August in the year 2010, before me, the undersigned, a Notary Public in and for said state, personally appeared Joanne Ciccolello, personally known to me or proved to me on the basis of satisfactory evidence to be the individual(s) whose name(s) is (are) subscribed to the within instrument and acknowledged to me that he/she/they executed the same in his/her/their capacity(ies), and that by his/her/their signature(s) on the instrument, the individual(s), or the person upon behalf of which the individual(s) acted, executed the instrument.

(notary seal and stamp)

MICHAEL F. SCHMIDT
Notary Public, State of New York
No. 01SC6118149
Qualified in New York County
Commission Expires November 1, 2012

~~THE PORT AUTHORITY OF NEW YORK AND NEW JERSEY~~

STATE OF NEW YORK)
)ss.:
COUNTY OF NEW YORK)

On the day of in the year 2010, before me, the undersigned, a Notary Public in and for said state, personally appeared , personally known to me or proved to me on the basis of satisfactory evidence to be the individual(s) whose name(s) is (are) subscribed to the within instrument and acknowledged to me that he/she/they executed the same in his/her/their capacity(ies), and that by his/her/their signature(s) on the instrument, the individual(s), or the person upon behalf of which the individual(s) acted, executed the instrument.

(Signature of Notary Public)

GAZ REALTY INC.

STATE OF New York)
)ss.:
COUNTY OF Queens)

On the 26th day of July in the year 2010, before me, the undersigned, a Notary Public in and for said state, personally appeared George Abi Zeid

personally known to me or proved to me on the basis of satisfactory evidence to be the individual whose name is subscribed to the within instrument and acknowledged that he executed the same in his capacity as President of GAZ REALTY INC.. and that by his signature on the instrument, the individual, or the corporation upon behalf of which the individual acted, executed the instrument.

(Signature of Notary Public)

CRISTINA MONTERROSO
Notary Public, State of New York
No. 01MO6220040
Qualified in Queens County
Commission Expires April 8, 2014

7-ELEVEN, INC.

STATE OF TEXAS)
)ss.:
COUNTY OF DALLAS)

On the 29th day of July in the year 2010, before me, the undersigned, a Notary Public in and for said state, personally appeared

Arthur E. Rubinett and Robin D. Bryant

personally known to me or proved to me on the basis of satisfactory evidence to be the individual whose name is subscribed to the within instrument and acknowledged that he executed the same in his capacity as Vice President and Assistant Secretary, respectively, of **7-ELEVEN, INC.** and that by his signature on the instrument, the individual, or the corporation upon behalf of which the individual acted, executed the instrument.

Gricelda Herrera
(Signature of Notary Public)

NOTARY PUBLIC STATE OF TEXAS
Gricelda Herrera
Notary Public, State of Texas
My Comm. Expires 01/28/2013

THIS AGREEMENT SHALL NOT BE BINDING UPON THE PORT AUTHORITY UNTIL DULY EXECUTED BY AN EXECUTIVE OFFICER THEREOF AND DELIVERED TO THE LESSEE AND SUBLESSEE BY AN AUTHORIZED REPRESENTATIVE OF THE PORT AUTHORITY

Lease No. ANB-862
Newark Liberty International Airport

CONSENT TO SUBLEASE AGREEMENT

THIS CONSENT AGREEMENT, dated as of June 1, 2010 (hereinafter referred to as the "Effective Date"), by and among **THE PORT AUTHORITY OF NEW YORK AND NEW JERSEY** (hereinafter called the "Port Authority"), **GAZ REALTY, INC.**, (hereinafter called the "Lessee"), and **CLEAN ENERGY**, a corporation of the State of California (hereinafter called the "Sublessee"), with an office and place of business at 3020 Old Ranch Parkway, Suite 400, Seal Beach, CA 90740 whose representative is James N. Harger, Senior Vice President & Chief Marketing Officer.

WITNESSETH, That:

WHEREAS, the Port Authority leased to the Lessee and the Lessee hired and took from the Port Authority certain premises (hereinafter called the "Entire Premises") at Newark Liberty International Airport (hereinafter called the "Airport") as described in a certain agreement of lease made effective July 31, 2008, and identified by Port Authority Lease Agreement No. ANB-862 (said agreement of lease, as the same may hereafter be supplemented and amended, being hereinafter called the "Lease"); and

WHEREAS, the Lessee has requested the consent of the Port Authority to the attached proposed sublease agreement (herein called the "Sublease") between the Lessee and the Sublessee effective as of June 1, 2010 pursuant to which Sublessee shall use a portion of the Entire Premises (hereinafter called the "Premises") in the location designated by the arrow shown on Exhibit I attached to the Sublease.

NOW, THEREFORE, for and in consideration of the covenants and mutual agreements herein contained, the Port Authority, the Lessee and the Sublessee hereby agree, as follows:

1. On the terms and conditions hereinafter set forth, the Port Authority consents to the Sublease.

2. Notwithstanding any provision of the Sublease to the contrary, both this Consent Agreement and the Sublease shall terminate, without notice to the Lessee or the Sublessee, on the earlier to occur of the day preceding the date of expiration or earlier termination of the Lease or the Sublease, or such earlier date for the expiration or termination of the Sublease as the Lessee

and the Sublessee may agree upon. The Sublessee shall quit the Premises and remove its property for which it is responsible therefrom on or before termination of the Sublease.

3. Except where expressly required or permitted herein to be oral, all notices, directions, requests, consents and approvals required to be given to or by either party shall be in writing, and all such notices and requests shall be personally delivered to the duly designated officer or representative of such party or delivered to the office of such officer or representative during regular business hours, or forwarded to him or to the party at such address by registered or certified mail. Said designated officer or representative of the Port Authority and the Lessee and their respective offices shall be as set forth in the Lease and Sublease. The Sublessee shall from time to time designate in writing an office within the Port of New York District and an officer or representative whose regular place of business is at such office upon whom notices and requests may be served. Until further notice, the Sublessee designates the representative named on the first page of this Consent Agreement as its representative upon whom notices and requests may be served and its address stated on the first page of this Consent Agreement as its office where notices and requests may be served. If mailed, the notices herein required to be served shall be deemed effective and served as of the date of the registered or certified mailing thereof.

4. The Sublessee hereby agrees to the terms and provisions contained in the exhibit attached hereto, hereby made a part hereof and marked Exhibit A. The terms and provisions of Exhibit A shall have the same force and effect as if herein set forth in full.

[THE REMAINDER OF THIS PAGE WAS INTENTIONALLY LEFT BLANK]

5. This Consent Agreement consists of the following: paragraphs 1 through 5, inclusive, Exhibit A and the Sublease Agreement attached hereto. It constitutes the entire agreement of the parties on the subject matter hereof and may not be changed, modified, discharged or extended except by written instrument duly executed by the Port Authority, the Lessee and the Sublessee.

IN WITNESS WHEREOF, the Port Authority, the Lessee and the Sublessee have executed these presents.

ATTEST:

Secretary

THE PORT AUTHORITY OF NEW YORK AND NEW JERSEY

By

(Title) David Kagan
Assistant Director (Seal)
Business, Properties & Airport Development

ATTEST:

Secretary

GAZ REALTY INC.

By

(Title) President
(Corporate Seal)

1994
New York

ATTEST:

Mitchell W. Pratt
Secretary

CLEAN ENERGY

By

Print Name James N. Harger

(Title) ~~President~~ Chief Marketing Officer AND
(Corporate Seal)
SENIOR VICE PRESIDENT

Port Authority Use Only:	
Approval as to Terms:	Approval as to Form:

LLF/mmw

EXHIBIT A

Terms and Conditions for Consent to Sublease Agreement

1. If the Lessee shall at any time be in default under the Lease, the Sublessee shall on demand of the Port Authority pay directly to the Port Authority any rental, fee or other amount due to the Lessee. No such payment shall relieve the Lessee from any obligation under the Lease or under this Consent Agreement, but all such payments shall be credited against the obligations of the Lessee or of the Sublessee, as the Port Authority may determine for each payment or part thereof.

2. (a) Neither this Consent Agreement nor anything contained herein nor the consent granted hereunder shall constitute or be deemed to constitute a consent to nor shall they create an inference or implication that there has been consent to any enlargement, variation or change in the rights and privileges granted to the Lessee under the Lease, nor consent to the granting or conferring any rights, powers or privileges to the Sublessee as may be provided by the Sublease if not granted to the Lessee under the Lease, nor shall they impair or affect any of the duties, liabilities and obligations imposed on the Lessee under the Lease. The Sublease is an agreement between the Lessee and the Sublessee with respect to the various matters set forth therein. Neither this Consent Agreement nor anything contained herein nor the consent granted hereunder shall constitute an agreement between the Port Authority and the Lessee that the provisions of the Sublease shall apply and pertain as between the Lessee and the Port Authority, it being understood that the terms, provisions, conditions and agreements of the Lease shall, in all respects, be controlling, effective and determinative. It is the intention of the Port Authority hereunder merely to permit the exercise of the Lessee's rights and privileges thereunder by the Lessee (to the extent permitted by the Lease and this Consent Agreement). The specific mention of or reference to the Port Authority in any part of the Sublease including without limitation thereto any mention of any consent or approval of the Port Authority now or hereafter to be obtained, shall not be or be deemed to create an inference that the Port Authority has granted its consent or approval thereto under this Consent Agreement or shall hereafter grant its consent or approval thereto or that the subject matter as to which the consent or approval applies has been or shall be approved or consented to in principle or in fact or that the Port Authority's discretion as to granting any such consents or approvals shall in any way be affected or impaired. The lack of any specific reference in any provision of the Sublease to Port Authority approval or consent shall not be deemed to imply that no such approval or consent is required and the Lease shall in all respects be controlling, effective and determinative.

(b) No provisions of the Sublease, including but not limited to those imposing obligations on the Sublessee with respect to laws, rules, regulations, taxes, assessments and liens, shall be construed as a submission or admission by the Port Authority that the same could or does lawfully apply to the Port Authority, nor shall the existence of any provision of the Sublease covering action which may be undertaken by the Lessee or the Sublessee including but not limited to those involving signs, construction, insurance, assignment and subletting, be deemed to imply or infer that Port Authority consent or approval thereto has or will be given or that Port Authority discretion with respect thereto will in any way be affected or impaired. References in this paragraph to specific matters and provisions as contained in the Sublease shall not be construed as indicating any limitation upon the rights of the Port Authority with respect to its discretion as to granting or

withholding approvals or consents as to other matters and provisions in the Sublease which are not specifically referred to herein.

(c) With respect to this Consent Agreement, the Lessee and the Sublessee understand and agree that although the Lessee is permitted under the Lease to perform services and functions for itself the Lessee may not and is expressly prohibited from performing any services or functions at the Airport for the Sublessee (even though the Lessee may perform the same for itself pursuant to the Lease) which are performed by organizations at the Airport authorized by permit from the Port Authority to perform such services or functions, unless the Lessee is specifically authorized by permit to perform such services or functions for other aircraft operators at the Airport and the Premises and in such event said services and functions shall be performed pursuant thereto. The Lessee, however, may make the necessary arrangements with the authorized organizations performing such services or functions at the Airport to have such services or functions performed for the Sublessee by such organizations or the Sublessee may perform such services and functions itself.

3. (a) (1) "Sublease Payments" shall include all amounts, monies, revenues, receipts and income of every kind paid or payable to the Lessee by the Sublessee, and if and to the extent that the full fair market rental value is not charged to or payable by the Sublessee, then the fair market rental value as determined by the Port Authority, arising out of or in connection with the Sublessee's use and/or occupancy of space in the Premises; and if the Sublease Payments are not separately stated from other charges paid or payable by the Sublessee to the Lessee, then the fair market rental value, as determined by the Port Authority, for that portion of the Premises used and/or occupied by the Sublessee shall be deemed to have been paid or payable to the Lessee by the Sublessee and shall constitute Sublease Payments hereunder.

(2) Effective as of the Effective Date, the Lessee and the Sublessee as a joint and several obligation shall pay to the Port Authority a fee (hereinafter called the "Consent Fee") at the times set forth in and in accordance with subparagraph (3) below.

(3) The Consent Fee shall be paid to the Port Authority by the Lessee and the Sublessee as a joint and several obligation as follows: On the 20th day of each and every calendar month during the time this Consent Agreement shall remain in effect and including the calendar month following the expiration or earlier termination of this Consent Agreement, the Lessee or the Sublessee shall render to the Port Authority a statement sworn to by a responsible fiscal or executive officer of the Lessee or the Sublessee showing all the Sublease Payments paid or payable for the preceding month and the Lessee or the Sublessee shall pay to the Port Authority at the time of rendering such statement an amount equal to ten percent (10%) applied to the Sublease Payments paid or payable for such preceding month, provided, however, if this Consent Agreement shall expire or be terminated effective on a day other than the last day of a calendar month, the final payment of the Consent Fee shall be due and payable within five (5) days after the effective date of such expiration or termination. Payments made hereunder shall be made to the Port Authority of New York and New Jersey, P.O. Box 95000-1517, Philadelphia, PA 19195-1517, or via the following wire transfer instructions: Bank: TD Bank, Bank ABA Number: 031201360, Account Number or to such other address as may hereafter be substituted therefor by the Port Authority, from time to time, by notice to the Lessee and the Sublessee. If the Lessee or the Sublessee have not rendered the aforesaid monthly statement(s) as of the time of execution of this Consent Agreement, and without limiting the generality of any other term or provision hereof, the

Lessee or the Sub-sublessee shall submit the monthly statement(s) provided for above and pay, at the time of execution and delivery of this Agreement to the Port Authority, an amount equal to the Consent Fee payable for the period from the Effective Date, to the time of delivery of this Consent Agreement to the Port Authority executed by the Lessee and the Sublessee.

(4) There shall be excluded from Sublease Payments any sum paid by the Sublessee to the Lessee for building janitorial services provided said sum is separately stated to and paid by the Sublessee and there shall be excluded from Sublease Payments any sum paid by the Sublessee to the Lessee for building maintenance services provided said sum is separately stated to and paid by the Sublessee and, provided further, the Sublessee and the Lessee each acknowledge and agree that the Port Authority does and shall continue to have the right at any time and from time to time to withdraw the foregoing exclusions from Sublease Payments, in whole or in part, or to establish a separate fee for each such service, which may be a percentage fee other that ten percent (10%), upon sixty (60) days' prior written notice to the Sublessee and the Lessee.

(5) (i) It is understood and agreed by the Lessee that the Consent Fee shall be additional rent under the Lease.

(ii) The obligation of the Sublessee to pay the Consent Fee shall be and be deemed a promise to pay a sum of money by the Sublessee to the Port Authority and shall be recoverable by the Port Authority from the Sublessee in the same manner and with like remedies as a sum of money owed to the Port Authority, provided, however, nothing herein shall preclude the Port Authority from joining the Sublessee in a summary proceeding against the Lessee.

(6) In connection with the payment of the Consent Fee hereunder the Lessee and the Sublessee shall each, from and after the Effective Date through the remainder of the time this Consent Agreement shall remain in effect, maintain in accordance with accepted accounting practice, for one (1) year after expiration or earlier termination thereof, and for a further period extending until the Lessee shall receive written permission from the Port Authority to do otherwise, records and books of account recording all transactions in any wise connected with the Sublease and the Sublessee's use and occupancy of the Premises, which records and books of account shall be kept at all times within the Port of New York District. Further the Lessee and the Sublessee shall each permit in ordinary business hours during the time the Sublease shall remain in effect, and for one year thereafter, the examination and audit by the officers, employees and representatives of the Port Authority of such records and books of account.

(7) Neither a partnership nor any joint adventure is hereby created or implied notwithstanding the fact that the Consent Fee to be paid hereunder is an obligation of the Sublessee and the Lessee and shall be determined based upon a percentage of the Sublease Payments.

(8) Neither the Lessee nor the Sublessee shall divert or allow to be diverted from payment under the Sublease any revenues arising out of or in connection with the Sublease or the Sublessee's use and occupancy of the Premises.

(b) Nothing contained herein including without limitation the obligation of the Sublessee to pay the Consent Fee nor the payment thereof by the Sublessee nor the acceptance

thereof by the Port Authority shall create or be deemed to have created a landlord tenant relationship or privity of estate between the Port Authority and the Sublessee nor shall be or be deemed to be an attornment by the Sublessee to the Port Authority nor acceptance thereof by the Port Authority and the Sublease and the occupancy by the Sublessee of the Premises shall in all events be and remain subject and subordinate to the Lease.

4. If the Lessee or the Sublessee should fail to pay any amount required under this Consent Agreement when due to the Port Authority, including without limitation any payment of the Consent Fee, or any other fees, or any payment of utility or other charges, or if any such amount is found to be due as the result of an audit, then, in such event, the Port Authority may impose (by statement, bill or otherwise) a late charge with respect to each such unpaid amount for each late charge period hereinbelow described) during the entirety of which such amounts remain unpaid, each such late charge not to exceed an amount equal to eight-tenths of one percent (.8%) of such unpaid amount for each late charge period. There shall be twenty-four (24) late charge periods during each calendar year; each late charge period shall be for a period of at least fifteen (15) calendar days except one late charge period each calendar year may be for a period of less than fifteen (15) (but not less than thirteen (13)) calendar days. Without limiting the generality of the foregoing, late charge periods in the case of amounts found to have been owing to the Port Authority as the result of Port Authority audit findings shall consist of each late charge period following the date the unpaid amount should have been paid under this Consent Agreement. Each late charge shall be payable immediately upon demand made at any time therefor by the Port Authority. No acceptance by the Port Authority of payment of any unpaid amount or of any unpaid late charge shall be deemed a waiver of the right of the Port Authority to payment of any late charge or late charges payable under the provisions of this paragraph, with respect to such unpaid amount. Nothing in this paragraph is intended to, or shall be deemed to affect, alter, modify or diminish in any way (i) any rights of the Port Authority under this Consent Agreement, including without limitation the Port Authority's rights set forth in paragraph 8 hereof or (ii) any obligations of the Lessee or the Sublessee under this Consent Agreement. In the event that any late charge imposed pursuant to this paragraph shall exceed a legal maximum applicable to such late charge, then, in such event, each such late charge payable under this Consent Agreement shall be payable instead at such legal maximum.

5. The Consent Fee payable under this Consent Agreement shall be subject to increase from time to time upon thirty (30) days' notice from the Port Authority to the Lessee and the Sublessee and upon the effective date of the increase set forth in said notice (which date is herein called the "Fee Increase Date"), the Consent Fee payable by the Lessee and the Sublessee under this Consent Agreement shall be as set forth in said notice. This Consent shall be cancelled and the Sublease shall be terminated effective as of the date immediately preceding the Fee Increase Date without notice to the Lessee or the Sublessee in the event that either (1) the Port Authority shall have received a notice from the Lessee prior to the Fee Increase Date that the Lessee does not wish to pay the increased Consent Fee, or (2) the Port Authority shall have received a notice from the Sublessee prior to the Fee Increase Date that the Sublessee does not wish to pay the increased Consent Fee. If the Port Authority does not receive such a notice from the Lessee or the Sublessee then the increased Consent Fee will become effective on the Fee Increase Date as set forth in the Port Authority's notice. No cancellation of this Consent Agreement pursuant to this paragraph shall or shall be construed to relieve the Lessee or the Sublessee of any obligations or liabilities hereunder which shall have accrued on or before the effective date of such cancellation.

6. The Sublessee, in its operations under and in connection with the Sublease and its use and/or occupancy of the Premises, agrees to assume, observe, be bound by and comply with all the terms, provisions and conditions of the Lease.

7. (a) Without in any wise affecting the obligations of the Lessee under the Lease and under this Consent Agreement and notwithstanding the terms and provisions of the Sublease, the Sublessee shall make repairs and replacements to the Premises as if it were the Lessee under the Lease. In addition, the Sublessee shall indemnify and hold harmless the Port Authority, its Commissioners, officers, employees and representatives from and against (and shall reimburse the Port Authority for their costs and expenses including legal expenses incurred in connection with the defense of) all claims and demands of third persons including but not limited to claims and demands for death, for personal injuries and for property damages, arising out of a breach or default of any term or provision of this Agreement by the Sublessee or out of its operations under the Sublease or at the Premises, or out of the use of the Premises by the Sublessee or by others with its consent, or out of any other acts or omissions of the Sublessee, its officers, employees, agents, representatives, contractors, customers, guests, invitees and others who are doing business with the Sublessee at the Premises, or out of any other acts or omissions of the Sublessee, its officers and employees at the Airport, including claims and demands of the City of Newark from which the Port Authority derives its right in the Airport, for indemnification, arising by operation of law or pursuant to the Basic Lease (as defined in the Lease) whereby the Port Authority has agreed to indemnify the City of Newark against claims. However, all acts and omissions of the Sublessee shall be deemed to be acts and omissions of the Lessee under the Lease and the Lessee shall also be severally responsible therefor, including but not limited to the obligations of indemnification, repair and replacement.

(b) If so directed, the Sublessee shall at its own expense defend any suit based upon any such claim or demand (even if such claim or demand is groundless, false or fraudulent), and in handling such it shall not, without obtaining express advance permission from the General Counsel of the Port Authority, raise any defense involving in any way the jurisdiction of the tribunal over the person of the Port Authority, the immunity of the Port Authority, its Commissioners, officers, agents or employees, the governmental nature of the Port Authority, or the provisions of any statutes respecting suits against the Port Authority.

8. (a) In addition to the insurance required to be maintained by the Lessee under the Lease, the Sublessee during the period the Sublease shall remain in effect shall in its own name as insured and including the Port Authority and the Lessee as additional insureds obtain, maintain and pay the premiums on a policy or policies of Commercial General Liability Insurance, including but not limited to premises-operations and completed operations, covering bodily injury, including death, and property damage liability, none of the foregoing to contain care, custody or control exclusions, and providing for coverage in the limit set forth below. All the aforesaid policy or policies of insurance shall also provide or contain an endorsement providing that the protections afforded the Sublessee thereunder with respect to any claim or action against the Sublessee by a third person shall pertain and apply with like effect with respect to any claim or action against the Sublessee by the Port Authority or the Lessee, or both, but such endorsement shall not limit, vary, change or affect the protections afforded the Port Authority and the Lessee as additional insureds. In addition, the insurance required hereunder shall provide or contain an endorsement providing that the protections afforded the Port Authority or the Lessee, or both, thereunder as additional insureds

with respect to any claim or action against the Port Authority or the Lessee, or both, by the Sublessee shall be the same as the protections afforded the Sublessee thereunder with respect to any claim or action against the Sublessee by a third person as if the Port Authority and the Lessee were the named insureds thereunder. Further, the said policy or policies of insurance shall also provide or contain a contractual liability endorsement covering the obligations assumed by the Sublessee under subparagraphs (a) and (b) hereof.

	Minimum Limit
Commercial General Liability: Combined single limit per occurrence for death, bodily injury and property damage liability	$5,000,000.00
Commercial Automobile Liability: Combined single limit per occurrence for death, Bodily injury and property damage liability	$2,000,000.00

(b) Without limiting the provisions hereof, in the event the Sublessee maintains the foregoing insurance in limits greater than aforesaid, the Port Authority shall be included therein as an additional insured to the full extent of all such insurance in accordance with all the terms and provisions hereof.

(c) All insurance coverages and policies required under this paragraph may be reviewed by the Port Authority for adequacy of terms, conditions and limits of coverage at any time and from time to time during the period the Sublease remains in effect. The Port Authority at any such time may make additions, deletions, amendments to or modifications of the above-scheduled insurance requirements, including an increase in such minimum limits, and may require such other and additional insurance, in such reasonable amounts, against such other insurable hazards, as the Port Authority may deem advisable and the Sublessee shall promptly comply therewith.

(d) As to the insurance required by the provisions of this paragraph, a certified copy of the policies or a certificate or certificates or binders satisfactory to the Port Authority evidencing the existence thereof, shall be delivered by the Lessee to the Port Authority upon delivery of this Consent Agreement to the Port Authority. Each policy, certificate or binder delivered as aforesaid shall bear the endorsement of or be accompanied by evidence of payment of the premium thereon. In the event a binder is delivered, it shall be replaced within thirty (30) days by a certified copy of the policy or a certificate. Each such copy or certificate shall contain a valid provision or endorsement, unqualifiedly committing the insurer not to cancel, terminate, change or modify the policy without giving thirty (30) days' written advance notice thereof to the Port Authority. Each such copy or certificate shall contain an additional endorsement providing that the insurance carrier shall not, without obtaining express advance permission from the General Counsel of the Port Authority, raise any defense involving in any way the jurisdiction of the tribunal over the person of the Port Authority, the immunity of the Port Authority, its Commissioners, officers, agents or employees, the governmental nature of the Port Authority or the provisions of any statutes respecting suits against the Port Authority. Any renewal policy shall be delivered to the Port Authority at least thirty (30) days prior to the expiration of each expiring policy, except for any policy expiring after the date of expiration of the term of this Consent. The aforesaid insurance shall

be written by a company or companies approved by the Port Authority, the Port Authority agreeing not to withhold its approval unreasonably. If at any time any of the insurance policies shall be or become unsatisfactory to the Port Authority as to form or substance or if any of the carriers issuing such policies shall be or become unsatisfactory to the Port Authority, the Sublessee shall promptly obtain a new and satisfactory policy in replacement thereof. If the Port Authority at any time so requests, a certified copy of each of the policies shall be delivered to the Port Authority.

9. This Consent Agreement may be revoked at any time by the Port Authority without cause on thirty (30) days' notice to the Lessee and the Sublessee and no such revocation shall be deemed to affect the Lease or the continuance thereof, but the Sublease shall be deemed terminated thereby.

10. The granting of this Consent Agreement by the Port Authority shall not be deemed to operate as a waiver of the rights of the Port Authority, or as a consent to any subsequent sublease agreement (by the Lessee or by the Sublessee) or to any assignment of the Lease or to any assignment of the Sublease or of any rights under any of the foregoing, whether in whole or in part.

11. Reference herein to the "Lessee" or the "Sublessee" shall mean and include as to the Lessee and the Sublessee, their respective officers, agents, employees and also others at the Premises or the Airport with the consent of either the Lessee or the Sublessee.

12. The Lessee and the Sublessee hereby represent to the Port Authority that they have complied with and will comply with all laws, governmental rules, regulations and orders now or at any time during the term of the Sublease which as a matter of law are applicable to or which affect the operations of the Lessee and the Sublessee under the Lease or its or their use and/or occupancy of the Premises. The obligation of the Lessee and the Sublessee hereunder to comply with governmental requirements is provided herein for the purpose of assuring proper safeguards for the protection of persons and property. Such provision is not to be construed as a submission by the Port Authority to the application to itself of such requirements or any of them.

13. The Sublessee assures that it will undertake an affirmative action program as required by 14 CFR Part 152, Subpart E, to insure that no person shall on the grounds of race, creed, color, national origin, or sex be excluded from participating in any employment activities covered in 14 CFR Part 152, Subpart E. The Sublessee assures that no person shall be excluded on these grounds from participating in or receiving the services or benefits of any program or activity covered by this subpart. The Sublessee assures that it will require that its covered suborganizations provide assurances to the Sublessee that they similarly will undertake affirmative action programs and that they will require assurances from their suborganizations, as required by 14 CFR Part 152, Subpart E, to the same effect.

14. Nothing contained in this Consent Agreement or the Sublease shall be or deemed to be consent to, or approval of, the erection of any structures, or the making of any improvements, alterations, modifications, additions, repairs or replacements to the Premises including without limitation the installation of any signs at the Airport. The Lessee and Sublessee agree that no construction or installation, as aforesaid, shall be performed without the prior written approval of the Port Authority and subject to the terms and conditions of the Lease and of the Sublease and an approved Alteration Application which the Lessee shall prepare and submit to the Port Authority.

15. The Sublease shall not be changed, modified or extended except by written instrument duly executed by the parties thereto and only with the express prior written consent of the Port Authority.

16. If the Sublessee is obligated by any other agreement to maintain a security deposit with the Port Authority to insure payment and performance by the Sublessee of all fees, rentals, charges and obligations which may become due and owing to the Port Authority arising from the Sublessee's operations at the Airport pursuant to any such other agreement or otherwise, then all such obligations under such other agreement and any deposit pursuant thereto and any interest thereon also shall be deemed obligations of the Sublessee under this Consent Agreement and as security hereunder as well as under any other agreement, all provisions of such agreement with respect to such obligations and any obligations thereunder of the Port Authority as to the security deposit hereby being incorporated herein by this reference as though fully set forth herein and hereby made a part hereof. The termination, revocation, cancellation or expiration of any other agreement to which such security shall apply or any permitted assignment of such other agreement shall not affect such obligations as to such security which shall continue in full force and effect hereunder and additionally as therein provided.

17. This Consent Agreement and any claim, dispute or controversy arising out of, under or related to this Consent Agreement shall be governed by, interpreted and construed in accordance with the laws of the State of New Jersey, without regard to choice of law principles.

18. It shall be understood that any capitalized terms not defined herein shall have the meaning as such terms are defined in the Lease.

19. Neither the Commissioners of the Port Authority nor any of them, nor any officer, agent or employee thereof shall be held personally liable to the Lessee or to the Sublessee under any term or provision of this Consent or because of its execution or because of any breach or alleged breach thereof.

For the Port Authority

Initialed:

For the Lessee

For the Sublessee

COMPRESSED NATURAL GAS VEHICLE FUELING STATION AND CNG SALES AGREEMENT

This Agreement (the "Agreement") is made and entered into as of March 05, 2010 ("Effective Date") by and between Gaz Realty, Inc., a New York corporation ("GAZ") and Clean Energy, a California corporation ("CE") GAZ and CE are sometimes referred to in this Agreement individually as a "Party" or jointly as "Parties."

In consideration of the mutual promises, covenants, and agreements herein contained, the sufficiency of which is hereby agreed to by the Parties, the Parties hereto agree as follows:

ARTICLE 1
SCOPE OF AGREEMENT AND DEFINITIONS

1.1 Intent. This Agreement expresses the terms and conditions pursuant to which GAZ authorizes CE to design, construct, operate and maintain a compressed natural gas fueling station on property leased by GAZ located at 100 Lindberg Road, Newark Liberty International Airport, Newark New Jersey

1.2 Definitions. As used in this Agreement, the following terms and expressions shall have the indicated meanings:

"Agreement" means this document and any and all exhibits attached hereto.

"CE" means Clean Energy acting by and through its employees, officers, affiliates, subcontractors and authorized agents.

"CNG" means pipeline quality natural gas, compressed for vehicle use

"CNG Vehicle(s)" means motor vehicles powered by internal combustion engines using CNG as a primary fuel.

"Gasoline Gallon Equivalent" means 124,800 BTU/gallon. Also referred to as a GGE.

"GAZ" means GAZ, acting by and through its employees, officers and authorized agents.

"Party" or "Parties" means CE and GAZ, in their respective capacities as parties to this Agreement.

"Premises" means that portion of the real property leased by GAZ and located at 100 Lindberg Road, Newark Liberty International Airport, Newark, New Jersey 97114.

upon which the Station (as hereinafter defined) will be constructed and operated as more fully described in Exhibit I, annexed hereto and made a part hereof

"Station" means the facility for refueling CNG Vehicles designed, constructed, operated and maintained by CE as more fully described in Exhibit II annexed hereto and made a part hereof

"Therm" means 100,000 British Thermal Units

"Third Party Users" means CNG vehicles owned and/or operated by entities other than the GAZ

ARTICLE 2
RESPONSIBILITIES OF CE

2 1 Construction of Plant and Station.

2 1 1 Design and Construction of Plant by GAZ. GAZ shall design, construct and obtain all necessary permits for the construction of the physical plant on the Premises ("Plant"), as more fully described in Exhibit III All costs in connection with the construction of the Plant shall be borne by CE, provided, however the total cost to CE for the construction of the Plant ("Plant Construction Costs"), which includes the cost of the construction, plans, and all in scope construction phase tasks, shall not exceed four-hundred and ninety-two thousand three-hundred and eighty six dollars ($492,386). Upon the execution of this Agreement, CE shall pay GAZ ninety-six thousand dollars ($96,000) to be applied to the Plant Construction Costs, provided however for all other expenditures of Plant Construction Costs by GAZ, GAZ must submit a written request to CE, itemizing each expense, prior to making any such expenditure ("Expenditure Request") and CE shall not be financially responsible for any expenditures made by GAZ without obtaining CE's prior written consent to the Expenditure Request CE shall use its best efforts to respond to Expenditure Requests within forty eight (48) hours from submission by GAZ and shall sign and return to GAZ the Expenditure Requests that it approves ("Approved Expenditure Request"). CE's approval of Expenditure Requests will, in part, be based upon whether the prices in the Expenditure Request are reasonable market prices. CE shall make payments of the Plant Construction Costs within thirty (30) calendar days of receipt from GAZ of an invoice, which shall be accompanied by the applicable Approved Expenditure Request. Any payment due pursuant to an Approved Expenditure Request not made within thirty (30) calendar days of receipt from GAZ of an invoice for such amount, shall accrue interest on the unpaid amount at a rate of 12% per annum, calculated from the 31st day after receipt of the invoice to and including the date payment is received by GAZ. For purposes of this Section, receipt shall be defined as three (3) days after the invoice is mailed by GAZ.

(a) CE shall reimburse GAZ for the fees in connection with the permits, design, engineer's fees, and architect's fees (collectively the "Design and Engineer's Costs") for the Station up to an amount not to exceed fifty-thousand dollars ($50,000), provided that GAZ must furnish CE with proof of such costs, including exact

amounts. CE shall pay the Design and Engineer's Costs referenced in this Section 2.1.1(a) within ten (10) business days of receipt from GAZ of an invoice, which shall be accompanied by proof of such costs reasonably acceptable to CE.

2.1.2 Design and Construction of Station by CE. CE shall design and construct the Station and all parts and connections, install all Station equipment, as more fully described in Exhibit I, including all electrical and gas hook-ups. CE shall also operate and maintain the Station, which shall include dispensers designed for public access, as shown in Exhibit I (the "Public Dispensers"), on the Premises.

2.1.3 Transporting Fuel to the Station. To the extent that there are any fees in connection with transporting the fuel to the Station, CE shall be responsible for such costs and shall pay PSEG directly.

2.2 CNG Service to Third-Party Users. CE shall provide the Station with CNG to fuel third-party vehicles and will bill the Third Party Users at rates set in CE's sole and absolute discretion (the "Retail Rate").

2.2.1 Form of Payment. The Station shall be capable of accepting Wright Express, CE's proprietary fuel card, Visa, MasterCard, American Express and Voyager credit cards.

2.3 Maintenance. CE shall maintain the Station in accordance with the following requirements:

2.3.1 Routine Maintenance. CE shall provide scheduled, routine maintenance service for the Term (as defined below) of this Agreement and shall repair or replace, any defective parts or equipment at its expense. CE shall also perform other necessary maintenance or repairs, including emergency repairs, at its expense, in order to keep the Station operating. However, any maintenance or repair costs incurred due to damage, abuse or neglect by GAZ's personnel shall be billed to GAZ at CE's then-existing rates.

2.3.2 Scheduling. CE and GAZ shall mutually agree on times for maintenance services that require the Station to be out of operation for more than four (4) hours.

2.3.3 Service Calls. CE shall be available to provide emergency repair service on a 24-hour, 7-day per week basis, and will provide an emergency contact telephone number to GAZ. In the event of an emergency at the Station, CE shall use commercially reasonable efforts to respond within six (6) hours following notification by GAZ and will restore the operation of the Station as soon as is commercially reasonable.

2.4 Training. CE shall offer reasonable training programs to be held at the Premises or at such other mutually agreeable location, at CE's sole cost and expense, to educate GAZ's personnel as to the procedures for the safe and efficient use of the Station, including, without

bra

limitation, procedures relating to safe vehicle fueling, troubleshooting and appropriate emergency procedures.

2.5 Compliance with Law. In performing the obligations under this Agreement, CE shall comply in all material respects with all applicable federal, state and local laws, regulations, ordinances and rulings, including (but not limited to) those pertaining to health, safety, employment and environmental matters.

2.6 CE's Costs. Except as specified in this Article 2 and in Exhibit IV or as may be separately agreed to by GAZ and CE, CE shall not charge GAZ for other costs incurred in providing the services described in this Article. CE shall be responsible for the ad valorem or possessory interest taxes relating solely to the Station.

ARTICLE 3
GAZ's RESPONSIBILITIES

3.1 Maintenance of Premises. GAZ shall maintain the Premises, the Plant and the real property in the vicinity of the Station in a clean, safe, and commercially reasonable condition suitable for CNG vehicle refueling use, including the ingress to, and egress from, the Station.

3.2 Protection of CE Property. GAZ shall use commercially reasonable efforts in storing and protecting CE's property and the Station, including spare parts for the Station, which shall be kept in a lockbox in the compressor compound, and the Station itself, provided, however, that GAZ shall have no obligation to insure the same or to indemnify CE for loss or damage thereof, except as expressly provided in the indemnification provision provided below.

3.3 Compliance with Law. In performing its obligations under this Agreement, GAZ shall comply in all material respects with all applicable federal, state and local laws, regulations, ordinances and rulings, including, but not limited to, those pertaining to health, safety, employment and environmental matters.

3.4 On-Site Personnel. GAZ shall provide CE with the ability to accept cash payments for CNG fuel transactions at the Station and with personnel on site capable of collecting cash payments and authorizing cash transactions through CE's fuel management system during all hours the Station is in operation. CE will collect the proceeds of all cash transactions in connection with the Station from GAZ at a minimum of a monthly basis.

3.5 Payment of CE Billings. GAZ shall pay each invoice submitted by CE within ten (10) business days following receipt of the invoice by GAZ. For purposes of this Section, receipt shall be defined as three (3) days after the invoice is mailed by CE. Any payments not made when due shall accrue interest on the unpaid amount at a rate of 12% per annum, calculated from the date payment is due to and including the date payment is received by CE.

3.6 GAZ's Costs. Except as specified in this Article, or as may be separately agreed to in writing by GAZ and CE, GAZ shall not charge CE for the materials or labor utilized in

providing the services provided in this Article. GAZ shall be responsible for all taxes (including, without limitation, any real property taxes and assessments except for the taxes referred to in Paragraph 2.6 above) relating to the Premises, as well as, any and all maintenance and repair costs, as contemplated in this Article

3.7 Non-Compete Covenant. Neither GAZ, nor its owners (through a family member, an affiliate, etc.) shall, during the Term, engage any party other than CE to design and/or construct and/or operate and/or maintain a compressed natural gas fueling station within a five (5) mile radius of the Station, without the prior written consent of CE or have any interest as an owner in a compressed natural gas fueling station within a five (5) mile radius of the Station, without the prior written consent of CE, provided, however, this restriction shall not apply if CE materially breaches this Agreement.

ARTICLE 4
LICENSE TO USE PREMISES

4.1 Permitted Use. To enable CE to fulfill its obligations set forth herein, GAZ hereby licenses and permits CE to use the Premises and grants the right of ingress to and egress from the Premises to CE, CE's employees, agents, servants, customers, vendors, suppliers, patrons and invitees for the purposes contemplated hereby, including, but not limited to the retail sale of CNG and liquefied natural gas and any purposes incidental thereto, in accordance with the terms and conditions of this Agreement GAZ shall not, and shall not permit others to levy any rent, charge, lien or encumbrance not expressly provided for in this Agreement against CE for the use of the Premises or the Station.

4.2 Clear Title. GAZ is, and shall remain during the Term of this Agreement, the lessee of the Premises, and shall not itself place and shall use its best efforts to prevent any third party from placing any lien or encumbrance affecting the Station or CE's performance hereunder. CE shall be the owner of the Station, and its parts and equipment. CE shall have the right to grant a lien or encumbrance against its right, title and interest in the Station or its equipment to a third party for financing purposes; provided, however, that CE shall not place any liens or encumbrances of any kind to be placed on the Premises, and shall promptly discharge, at its expense, any and all mechanic's, laborer's or materialman's liens, encumbrances or charges against the Premises or the Station related to its performance under this Agreement. CE shall notify GAZ within twenty-four (24) hours of it becoming aware of the placement of any such lien or charges against the Premises and failure to proceed diligently to promptly discharge same immediately shall constitute a material breach of this Agreement.

4.3 Memorandum of Agreement. Upon CE's request, GAZ shall execute a memorandum reflecting this Agreement and the property interest of CE in recordable form to reflect CE's interest in the Station. CE shall be responsible for all reasonable costs related thereto.

4.4 Sale, Abandonment or Removal. Unless otherwise agreed to by the Parties in writing, upon termination or expiration of this Agreement, CE shall have the right, but not the obligation to either (i) sell the Station and Plant to GAZ on mutually agreeable terms or (ii) remove

WA

the Station and Plant at CE's sole expense (including any and all merchandise, equipment, furnishings, fixtures, machinery and tools relating to the Station and Plant), from the Premises, which shall be restored in all material respects to their condition as of the date of this Agreement, excluding the removal of any underground aspects of the Station or Plant, such as underground piping which may be capped, in accordance with applicable law, and left in place by CE. Notwithstanding anything herein to the contrary, CE shall not be obligated to remove any underground aspects of the Station or Plant. Alternatively, subject to GAZ's prior written consent, upon termination or expiration of this Agreement, CE may abandon the same in place by quitclaiming all of its right, title and interest therein to GAZ. Thereafter, CE shall have no further rights or obligations under this Agreement with respect to the Premises. This Section 4.4 shall survive termination or expiration of this Agreement.

4.5 Pre-Existing Conditions. The Premises shall be clear of pre-existing underground hazards or soil contaminants that would impact the construction of the Station. In the event that CE elects, in its sole discretion, to conduct environmental testing of the Premises, which may include, but shall not be limited to a "Phase I" or "Phase II" environmental assessment, CE shall obtain GAZ's prior written consent, which consent shall not be unreasonably withheld, delayed or conditioned, prior to conducting any such testing and shall pay for the cost of such environmental assessment. If it is determined through environmental testing or otherwise that underground hazards, soil contaminants or soil conditions exist that either (a) require removal, replacement, and disposal of soils or materials, (b) require remediation, or (c) require unanticipated soil or foundation preparation work, GAZ shall be financially and legally responsible for such remediation, removal, replacement preparation work, and/or disposal. In addition, in the event that the site is deemed unsuitable for the Station due to the pre-existing underground hazard, soil contamination or soil conditions, GAZ shall use its best efforts, but shall not be obligated to provide an alternative, suitable site for the Station construction and shall reimburse CE for any and all reasonable costs related to the Plant and Station relocation. If GAZ has not, within thirty (30) days after discovery of any pre-existing underground hazard or soil contaminant or soil condition at the Premises (i) commenced, and thereafter diligently proceeded to prosecute to completion the correction of such condition or (ii) located a suitable alternative site, CE may, without further obligation or penalty, terminate this Agreement by written notice to GAZ and GAZ shall reimburse CE for any and all reasonable costs related to the permitting, construction and/or removal of the Station and the Plant, including, but not limited to the Plant Construction Costs, the Design and Engineer's Costs and the Initial Payment, paid or committed to by CE prior to determination of the site being unsuitable. Alternatively, if GAZ elects not to pursue remediation or removal of the contamination or hazardous materials, GAZ may terminate this Agreement, provided, however GAZ shall reimburse CE for any and all reasonable costs related to the permitting, construction and/or removal of the Station and the Plant, including, but not limited to the Plant Construction Costs, the Design and Engineer's Costs and the Initial Payment, prior to determination of the site being unsuitable. This Section 4.5 shall survive termination of this Agreement.

4.6 Landlord Consent. GAZ shall obtain written consent from the Premises owner acknowledging this Agreement and consenting to the construction of the Station by CE and the use of the Premises as a CNG fueling facility by GAZ and CE, as described herein. In the event that the owner of the Premises fails to consent or attempts for any reason to withdraw consent to the

use of the Premises by GAZ and CE as described herein, CE may, without further obligation or penalty, terminate this Agreement for cause by written notice to GAZ and GAZ shall reimburse CE for (i) any and all Plant Construction Costs paid or committed to by CE prior to such termination, (ii) any and all Design and Engineer's Costs paid or committed to by CE prior to such termination, (iii) any and all amounts of the Initial Payment that CE has paid up to the date of termination and (iv) the costs associated with removing the Station, provided however the amounts in this Section 4.6 shall be subject to a twenty (20) year straight-line depreciation. This Section 4.6 shall survive termination of this Agreement.

ARTICLE 5
TERM AND TERMINATION

5.1 Term. The initial term of this Agreement shall commence on the Effective Date and end on the twentieth (20th) anniversary of the date CNG is first purchased at the Station (the "Commencement Date"). CE shall notify GAZ of the Commencement Date in writing. This Agreement shall automatically renew under the same terms and conditions, for consecutive five (5) year terms, unless (A) CE gives notice of termination to GAZ at least six (6) months prior to such renewal date or (B) GAZ gives notice of termination to CE at least six (6) months prior to such renewal date, provided however, GAZ acknowledges and agrees that it shall not engage any party other than CE to design and/or construct and/or operate and/or maintain a compressed natural gas fueling station on the Premises for a period of three (3) years from the date of termination, without the prior written consent of CE, provided that CE has not materially breached this Agreement. The initial term and any renewal terms are referred to herein as the "Term." This Section 5.1 shall survive termination of this Agreement.

5.2 Termination. Notwithstanding Section 5.1:

(a) This Agreement shall terminate immediately if, (i) CE terminates this Agreement pursuant to Sections 4.5 or 4.6 above or (ii) that certain Lease Agreement, dated July 31, 2008, by and between GAZ and The Port Authority of New York & New Jersey ("Lease") is terminated or expires and is not renewed, provided, however, in the event that the owner of the Premises sells the Premises to a new owner, who consents to the presence of the Station, this Agreement shall not terminate under this Section 5.2(a)(ii).

(b) Upon a material breach of this Agreement, either Party shall have the right to terminate this Agreement, for cause, upon fifteen (15) days written notice and opportunity to cure to the other Party, provided, however, that where it is not commercially reasonable to fully effect a cure to the other Party within the fifteen (15) day period set forth above, the Party in breach shall not be deemed to be in default of the Agreement and subject to termination for cause where it commences implementation of the cure within such fifteen (15) day period and thereafter proceeds diligently to cure the breach.

(c) Subject to Section 5.2 (b), in the event that CE or GAZ terminates

this Agreement during the Term due to GAZ's gross negligence, willful misconduct or breach of this Agreement. GAZ shall reimburse CE for (i) any and all Plant Construction Costs paid or committed to by CE prior to such termination, (ii) any and all Design and Engineer's Costs paid or committed to by CE prior to such termination, (iii) any and all amounts of the Initial Payment that CE has paid up to the date of termination and (iv) the costs associated with removing the Station, provided however the amounts in this Section 5.2(c) shall be subject to a twenty (20) year straight-line depreciation.

ARTICLE 6
CE's AND THIRD PARTIES' USE OF PUBLIC DISPENSERS

6.1 Use of Station by Third Party Users. During the Term, CE will use commercially reasonable efforts to market the Station to Third Party Users and sell CNG fuel to the Third Party Users at the Retail Rate.

6.2 Royalty. Commencing on the first day of the month directly following the Commencement Date and ending upon the expiration or any termination of this Agreement, if over 35,000 GGEs of CNG is purchased in a single month, CE shall pay to GAZ $0.10 per GGE for each GGE of CNG sold in excess of 35,000 GGEs for the applicable month ("Royalty Payment"). Royalty Payments relating to this Article shall be made by CE on a monthly basis within thirty (30) days following the end of each calendar month. Any Royalty Payment not made within thirty (30) days following the end of the applicable calendar month shall accrue interest on the unpaid amount at a rate of 12% per annum, calculated from the 31st day after the end of the applicable calendar month in which the Royalty Payment was due to and including the date payment is received by GAZ. Beginning on the one-year anniversary of the Commencement Date, and on each January 1st thereafter during the Term of this Agreement, the Royalty shall be increased by the change in the United States Bureau of Labor Statistics Consumer Price Index for New York – Northern New Jersey – Long Island Area, all Urban Consumers, since the date of the last adjustment.

6.3 Rent. Commencing on the Commencement Date, CE shall pay GAZ $3,500 per month as rent ("Rent") for use of the Premises. Rent shall be pro-rated for any partial month. Rent payments relating to this Section 6.3 shall be made by CE on a monthly basis within thirty (30) days following the end of each calendar month. Any Rent payment not made within thirty (30) days following the end of the applicable calendar month shall accrue interest on the unpaid amount at a rate of 12% per annum, calculated from the 31st day after the end of the applicable calendar month in which the Rent payment was due to and including the date payment is received by GAZ. Beginning on the one-year anniversary of the Commencement Date, and on each January 1st thereafter during the Term of this Agreement, the Rent shall be increased by the change in the United States Bureau of Labor Statistics Consumer Price Index for New York – Northern New Jersey – Long Island Area, all Urban Consumers, since the date of the last adjustment.

6.4 One-Time Initial Payment. GAZ shall be entitled to an additional one-time rent fee, which shall be applicable to the Term of this Agreement, in the amount of one hundred and seventy-five thousand dollars ($175,000) ("Initial Payment") on the following conditions:

(a) CE shall pay to GAZ fifty percent (50%) of the Initial Payment within thirty (30) business days of the Effective Date;

(b) The Plant engineer shall be required to issue a certificate ("Engineer's Certificate") which shall state the date on which the Plant construction is complete and prepared for the installation of the Station equipment ("Access Date") CE shall pay to GAZ the remaining fifty percent (50%) of the Initial Payment upon the later to occur of (i) CE's receipt of the Engineer's Certificate or (ii) the date on which CE may commence with the installation of the Station equipment, as indicated in the Engineer's Certificate.

(c) Notwithstanding anything in this Agreement to the contrary, in the event that the Access Date has not occurred within eighteen (18) months of the Effective Date of this Agreement or this Agreement has been terminated prior to the Access Date, GAZ shall be required to return the entire amount of the Initial Payment that CE has paid to GAZ within ten (10) business days after the end of the eighteenth (18th) month from the Effective Date.

ARTICLE 7
INDEMNIFICATION AND LIMITATION OF LIABILITY

7.1 Except to the extent that liabilities arise from CE's or its employees, agents, contractors or subcontractors' negligence or willful misconduct, GAZ agrees to indemnify, defend and protect CE and its officers, directors, agents and employees from and against and hold CE and its officers, directors, agents and employees harmless and free from any and all liability, loss, cost, expense or obligation, including without limitation reasonable attorneys' fees, court costs and other expenses, including without limitation, those of appeal, on account of or arising out of, injury to or death of any person or persons or damage to or loss of use of property (collectively "Losses"), from whatever cause, occurring during the Term related in any way to the construction of the Plant, the use of the Station by GAZ (except for any aspect of Station construction or operation attributable to CE or its employees or agents), negligence or willful misconduct by GAZ or its employees or agents, pre-existing contamination of the Premises or material breaches of this Agreement by GAZ. With respect to Losses arising out of Section 4.4, this Section 7.1 shall survive any termination or expiration of this Agreement until CE has either, sold, removed or abandoned the Station and with respect to occurrences covered by this Section 7.1 that took place during the Term, but were unknown during the Term, this Section 7.1 shall survive for a period of six (6) months after termination or expiration of this Agreement.

7.2 Except to the extent that liabilities arise from GAZ's or its employees, agents, contractors or subcontractors' negligence or willful misconduct, CE agrees to indemnify, defend and protect GAZ and its officers, directors, agents and employees from and against and hold GAZ and its officers, directors, agents and employees harmless and free from any and all Losses, from whatever cause, occurring during the Term related in any way to the construction, use, operation or maintenance of the Station by CE (except for any aspect of Station operation attributable to GAZ or its employees or agents), negligence or willful misconduct by CE or its employees or agents, or

62

hazardous substances brought onto the Premises by CE, or material breaches of this Agreement by CE. With respect to Losses arising out of Section 4.4, this Section 7.2 shall survive any termination or expiration of this Agreement until CE has either, sold, removed or abandoned the Station and with respect to occurrences covered by this Section 7.2 that took place during the Term, but were unknown during the Term, this Section 7.2 shall survive for a period of six (6) months after termination or expiration of this Agreement.

7.3 Indemnification Procedure. In the event any action is commenced or claim is made or threatened against an indemnified party, hereunder ("Indemnitee") as to which the other party ("Indemnitor") is obligated to indemnify Indemnitee or hold it harmless, Indemnitee shall promptly notify Indemnitor of such event and Indemnitor shall assume the defense of, and may settle, that part of any such claim or action commenced or made against Indemnitee which relates to Indemnitor's indemnification and Indemnitor may take such other steps as may be necessary to protect itself. Indemnitor shall not be liable to Indemnitee on account of any settlement of any such claim or litigation affected without Indemnitor's consent. The right of Indemnitor to assume the defense of any action shall be limited to that part of the action commenced against Indemnitee which relates to Indemnitor's obligation of indemnification and holding harmless.

7.4 Neither Party shall have any liability to the other Party for special, consequential, or incidental damages, except however in connection with a claim made against either Party by a third party, provided that such claim arises out of a claim within the scope of the indemnity obligations of CE or GAZ, as applicable, under this Agreement.

7.5 Dispute Resolution Procedures. In the event a dispute arises between the Parties related to this Agreement, the following process shall be followed:

(a) Each Party will designate a senior executive ("Designated Representative") to represent it in connection with any dispute that may arise between the Parties (a "Party Dispute"). The designations shall be as described elsewhere herein. Subsequent changes in a Party's Designated Representative shall be in writing and communicated in the same manner.

(b) In the event that a Party Dispute should arise, the Designated Representatives will meet with their attorneys, if they so agree, within five (5) business days after written request by any Party to any other Party (the "Dispute Notice") in an effort to resolve the Party Dispute.

(c) If the Designated Representatives are unable to resolve the Party Dispute within twenty (20) business days following their first meeting, the Party Dispute will be submitted to non-binding mediation in State of New York, County of Nassau, before a mediator made available to the Parties through JAMS.

(d) In the event that the mediation process fails to result in a resolution of the Party Dispute within forty-five (45) days following receipt of the Dispute Notice, the Parties may take any action they may deem necessary to protect their interests subject to the requirements of Section 10.6.

7.6 Force Majeure. In the event that CE is prevented from performing its duties

and obligations pursuant to this Agreement by circumstances beyond its control, including, without limitation, fires, floods, labor disputes, equipment failure, the interruption of utility services, the cessation of providing necessary products or services to CE by any supplier to CE, war, acts of terrorism, or Acts of God (hereinafter referred to as "Force Majeure"), then CE shall be excused from performance hereunder during the period of such disability ("Force Majeure Period"). If CE claims Force Majeure, CE shall notify GAZ within twelve (12) hours after it learns of the existence of a Force Majeure condition, and will also provide GAZ with an estimate, if one can be reasonably made, of the anticipated Force Majeure Period. CE will also notify GAZ within twelve (12) hours after the Force Majeure condition has terminated. CE shall agree to use commercially reasonable efforts to correct whatever events or circumstance cause the Force Majeure event. Nothing in this Section 7.6 shall relieve either Party from their payment obligations hereunder.

ARTICLE 8
INSURANCE

GAZ and CE shall each procure at their respective expense, and maintain in full force and effect during the term of this Agreement, including any renewals, with insurance carriers rated at least A-VII or higher in Best's Insurance Report and admitted to do business in the state where the Station is located, the following primary insurance in at least the minimum amounts specified, with the other respective Party named in the commercial general liability policy (or excess liability or umbrella liability policy, if applicable) and the automotive liability policy as an additional insured and including a transfer of rights or waiver of subrogation endorsement. Such insurance shall be endorsed to require at least thirty (30) days' written notice to the other respective Party of any material change or cancellation. GAZ and CE shall each provide the other with a reasonably satisfactory contractual liability indemnity endorsement relating to the Station and the potential liabilities relating thereto.

(a) Comprehensive Commercial General Liability Insurance, including blanket contractual liability applicable to personal injury and property damage, to a combined single limit of not less than $5,000,000. Excess liability or umbrella liability coverage may be used to evidence or provide limits in addition to primary limits of no less than $1,000,000 on the commercial general liability policy.

(b) Comprehensive Commercial Automobile Liability Insurance, including owned, non-owned and hired automobiles covering bodily injury and property damage, to a combined single limit of $1,000,000.

(c) Workers Compensation and Employers Liability

(i) Workers compensation in compliance with applicable state and federal laws.

(ii) Employers liability with a limit of not less than $1,000,000.

HB

(d) Pollution Legal Liability Insurance, covering bodily injury and property damage from environmental hazards of no less than $1,000,000.

(e) Professional Liability covering any design work contemplated by this agreement with limits of no less than $1,000,000.

The requirements for carrying the foregoing insurance shall not derogate from the provisions of indemnification as set forth in this Agreement.

GAZ shall send certificates of insurance evidencing such coverage within thirty (30) days after the date of this Agreement to:

Clean Energy
3020 Old Ranch Parkway
Suite 400
Seal Beach, California 90740
Attn: Ms. Barbara Johnson
Fax: (562) 493-4532

CE shall send certificates of insurance evidencing such coverage within thirty (30) days after the date of this Agreement to:

GAZ
GAZ Realty, Inc.
366 North Broadway, Suite 206
Jericho, New York 11753
Attn: George Abizeid
Fax: (516) 908-4999

ARTICLE 9
DESIGNATED REPRESENTATIVES AND NOTICES

9.1 Representatives. Each Party hereby designates the following as its representative (and its "Designated Representative" for dispute resolution purposes) for the administration of this Agreement:

GA

CE:	James N. Harger 3020 Old Ranch Parkway Suite 400 Seal Beach, California 90740
Telephone:	(562) 493-2804
Fax:	(562) 493-4532
GAZ:	Alan AbiZeid GAZ Realty, Inc.
Address:	366 North Broadway, Suite 206 Jericho, New York 11753
Telephone:	(516) 513-0155, extension 334
Fax:	(516) 908-4999

9.2 Notices. Except for GAZ's request for service calls, which may be made by telephone, notices pertaining to this Agreement shall be in writing and shall be transmitted either by personal delivery, facsimile, or by overnight delivery carrier and shall be deemed to be delivered upon receipt, except as otherwise provided herein. The addresses set forth below shall be the addresses used for notice purposes unless written notice of a change of address is given:

CE:	Clean Energy 3020 Old Ranch Parkway Suite 400 Seal Beach, California 90740 Attn: Mr. James N. Harger Fax: (562) 493-4532
GAZ:	GAZ Realty, Inc 366 North Broadway, Suite 206 Jericho, New York 11753 Attn: Alan AbiZeid Fax: (516) 908-4999

ARTICLE 10
MISCELLANEOUS

10.1 Assignment. Neither Party shall have the right to assign its rights or obligations hereunder without obtaining the prior written consent of the other Party (which consent shall not be unreasonably withheld), and any attempted assignment without such prior written consent shall be void; provided that such consent shall not be necessary in the context of an acquisition of either party by asset sale, merger, change in control or operation of law. Permitted assigns and successors in interest shall have the benefit of, and shall be bound by, all terms and

conditions of this Agreement. Notwithstanding anything contained herein to the contrary, either Party may assign this Agreement to such Party's parent corporation, an entity under common control with the Party, or a wholly-owned subsidiary of the Party without the consent of the other.

10.2 Headings. The headings in this Agreement are for convenience and reference only, and shall not affect the interpretation of this Agreement.

10.3 No Joint Venture. CE shall perform its duties herein as an independent contractor. Nothing contained herein shall be considered to create the relationship of employer and employee, partnership, joint venture or other association between the Parties, except as principal and independent contractor agent.

10.4 Waiver. No waiver by either Party of any one or more defaults by the other Party in the performance of any provisions of this Agreement shall operate or be construed as a waiver of any other default or defaults, whether of a like or different character. No waiver or modification of this Agreement shall occur as the result of any course of performance or usage of trade.

10.5 Severability. If any provision of this Agreement or the application thereof to any person or circumstances shall to any extent be held in any proceeding to be invalid or unenforceable, the remainder of this Agreement shall be valid and enforceable to the fullest extent permitted by law, but only if, and to the extent, such enforcement would not materially and adversely alter the Parties' essential objectives as expressed herein.

10.6 Governing Law, Forum and Venue. This Agreement shall be subject to and construed in accordance with the laws of the State of New York with the courts of that State having jurisdiction to resolve all disputes which may arise under or which relate to this Agreement. Any and all claims or actions arising out of or relating to this Agreement shall be filed in and heard by the state or federal courts with jurisdiction to hear such suits located in Nassau County, New York, and each Party hereby consents to the jurisdiction of such courts and irrevocably waives any objections thereto, including, without limitation, objections on the basis of improper venue or forum non conveniens.

10.7 Counterparts and Facsimile Execution. This Agreement may be executed in any number of counterparts, each of which, when so executed and delivered, shall be deemed an original, and all of which taken together shall constitute one and the same agreement. Delivery of an executed counterpart of this Agreement by facsimile shall be equally as effective as delivery of a manually executed counterpart. Any Party hereto delivering an executed counterpart of this Agreement by facsimile shall also deliver a manually executed counterpart, but the failure to do so shall not affect the validity, enforceability or binding effect of the counterpart executed and delivered by facsimile.

10.8 Attorney's Fees If any action at law or equity is commenced concerning this Agreement or to enforce its terms, the prevailing Party in such matter shall be entitled to the payment of reasonable attorneys' fees and costs as determined by the Court, in addition to any other relief

which may be awarded to that Party.

10.9 Additional Documents. The Parties agree to execute and to deliver to each other any and all other additional documents and to take any additional steps reasonably necessary to complete, to document and to carry out the business transaction contemplated by this Agreement.

10.10 Negotiated Transaction. The drafting and negotiation of this Agreement has been participated in by all of the Parties. For all purposes, this Agreement shall be deemed to have been drafted jointly by each of the Parties.

10.11 Representation regarding Authority to Sign Agreement. Each of the representatives of the Parties signing this Agreement warrants and represents to the other that he, she or it has the actual authority to sign this Agreement on behalf of the Party for whom he, she or it is purporting to represent

10.12 Entire Agreement. This Agreement and its exhibits contain the entire agreement between the Parties and it supersedes any prior written or oral agreements between the Parties concerning the subject matter of this Agreement. There are no representations, agreements, or understandings between the Parties relating to the subject matter of this Agreement which are not fully expressed within this Agreement and its exhibits.

10.13 Binding Effect. This Agreement shall be binding upon and inure to the benefit of the respective heirs, successors, assigns, affiliates and personal representatives of the Parties.

10.14 Modification. This Agreement shall not be modified, amended, or changed except in a writing signed by each of the Parties affected by such modification, amendment or change

10.15 Further Assurances. All of the Parties to this Agreement agree to perform any and all further acts as are reasonably necessary to carry out the provisions of this Agreement.

10.16 GAZ's Right of Access. GAZ and the owner of the Premises and their representatives and agents shall be entitled to access the Premises for any lawful purpose that does not disrupt CE's activities as described herein.

[The remainder of this page has intentionally been left blank.]

WE

IN WITNESS WHEREOF, the Parties hereto have caused this Agreement to be signed by their duly authorized representatives, effective as of the Effective Date.

CLEAN ENERGY

By: _____
James N. Harger
Senior Vice President &
Chief Marketing Officer

GAZ REALTY, INC.

By: _____
George Abizeid
President

Exhibit I
The Premises and Station Location

Exhibit II
Station Equipment

The following is a list of the major equipment for the Station:

- One (1) CNG compressor
- One (1) CNG gas dryer
- Two (2) CNG dispensers
- One (1) set of ASME storage vessels

Exhibit III

Scope of Work

Design and Construction of Plant by GAZ

Newark Liberty Plaza LLC
366 North Broadway Ste 206
Jericho NY 11753

CNG-GAZ Newark
Newark Airport
100 Lindberg Road
Newark NJ

Scope Of Work

GENERAL REQUIREMENTS
General requirements necessary to properly facilitate the work including supervision, general labor, rubbish removal, etc.

SURVEY/AS-BUILT
Provide surveying as necessary to locate the Compressed Natural Gas (CNG) equipment foundation and associated piles

EXCAVATION/EXPORT/FILL
Excavate as necessary to construct CNG equipment foundation, bollard footings, canopy column foundations, concrete drive mat and electrical/data conduits. Backfill all areas to sub-grade upon completion of work.

Cart away excess excavated material

Furnish and install 6" DGABC as subgrade under new drive mat.

Excavate as necessary to install CNG piping from vessels to dispensers. Backfill excavation using pea gravel upon completion of piping installation. (Piping to be furnished and installed by others)

CIVIL
Provide all foundation work required to install all CNG equipment including but not limited to piles, pile caps, concrete pads, reinforcement rebars, canopy foundation.

Provide canopy extension designed to operate with CNG dispensing equipment, including appropriate lightings.

Furnish and install 9ea x +/- 80' steel pipe piles at canopy column foundation location. 720 lft

Construct 3ea. canopy column foundation pile caps and associated grade beam. 19 cyd

Extend overhead canopy to cover the CNG dispensers (approximately 1,480 sft) including lighting. 1480 sft

Extend concrete drive mat as per the drawings (approximately 1,350 sft) 25 cyd

SITE FENCING
Furnish and install approximately 120 lft 6' high chain link fence on top of CNG equipment foundation. Provide 3' entry gate

Furnish and install 35 ea. 8" diameter concrete filled steel pipe bollards at perimeter of CNG equipment

Bollards to be installed in 12" x 3' deep concrete foundations.

Construct 6' masonry wall to shield the compressor and vessel location 330 sft

CAST-IN-PLACE CONCRETE
Construct 12" concrete equipment foundation (approximately 1,015 sft) and 8" concrete drive mat at dispenser area (approximately 410 sft)

Construct 4ea 5' x 5' x 5'deep canopy column foundations and bollard foundations. Provide re-bar at structural foundations and steel wire reinforcement at drive mat Sikaflex expansion joints upon completion of work. Concrete to be 3500 psi.

Provide 2' x 2' concrete encasement around new underground electrical conduits. Conduits to be installed from proposed transformer location to proposed location of CNG equipment.

Extend stainless steel fuel dispenser islands to support CNG dispensers (approximately 50 lft) 50 lft

CAISONS/TIMBER PILES
Furnish and install 7ea. 8" diameter steel pipe piles to support new CNG equipment foundation. Piles to be driven approximately 80' deep to bedrock Fill piles with concrete upon completion of installation.

ELECTRICAL
Provide 1,000 amp 480v, 3-ph electrical service from location of proposed transformer to CNG equipment.

Service to consist of 4ea. 4" diameter sch 80 PVC conduit (concrete encased) and 350 MCM primary cable.

Provide galvanized conduit and wire from CNG equipment to dispensers Perform wiring terminations

Furnish and install 4" diameter sch 80 PVC conduit from location of proposed kiosk to CNG dispensers for POS data wiring. (data wiring and terminations to be provided by others)

Provide necessary primary and secondary service including conduits and wires and transformer (if necessary) and provide conduits and wiring from utility connection point to a new 1000A switchgear. The new switchgear should be approved by CE and service utility and AHJ

The switchgear should have individual circuit breaker to gas dryer and compressor and transformer to provide 120V service Provide power supply conduits and wiring from switchgear to dryer and compressor control panel

Provide high voltage power from compressor control panel to compressor and control voltage from compressor control panel to each dispenser.

Provide instrumentation control power and data conduits and wiring between compressor, compressor control panel, dryer, and dispensers

Furnish and install all gas and fire protection devices and system as required by permitting authorities

MECHANICAL
Provide 6" c.s. Sch 80 pipe with manual shut off valves and check valves from gas utility connection point to gas dryer (provided by CE) and from gas dryer to compressor (provided by CE). All underground piping should be protected by approved cathodic protection.

Provide three (3) 1/2"x0.083" stainless steel, seamless tubing routed inside 4" PVC tubing from the compressor to each of the CNG dispenser.

Grand Total:
$492,386.00

PROVIDE SIGN-OFF FOR THE WORK COMPLETED To be approved by both Clean Energy and GAZ Realty.

NOTES
Due to the limited information available this estimate reflects the aforementioned scope of work and should be used for budgeting purposes only. All work must comply with applicable codes and standards including but not limited to NFPA and NEC.

THE PORT AUTHORITY OF NEW YORK AND NEW JERSEY

STATE OF NEW YORK)
)ss.:
COUNTY OF NEW YORK)

On the 26th day of August in the year 2010, before me, the undersigned, a Notary Public in and for said state, personally appeared David Kagan personally known to me or proved to me on the basis of satisfactory evidence to be the individual(s) whose name(s) is (are) subscribed to the within instrument and acknowledged to me that he/she/they executed the same in his/her/their capacity(ies), and that by his/her/their signature(s) on the instrument, the individual(s), or the person upon behalf of which the individual(s) acted, executed the instrument.

(Signature of Notary Public)

MICHAEL F. SCHMIDT
Notary Public, State of New York
No. 01SC6118149
Qualified in New York County
Commission Expires November 1, 20 12

GAZ REALTY INC.

STATE OF New York)
)ss.:
COUNTY OF Nassau)

On the 22 day of July in the year 2010, before me, the undersigned, a Notary Public in and for said state, personally appeared GEORGE ABIZEID personally known to me or proved to me on the basis of satisfactory evidence to be the individual whose name is subscribed to the within instrument and acknowledged that he executed the same in his capacity as President of GAZ REALTY INC.. and that by his signature on the instrument, the individual, or the corporation upon behalf of which the individual acted, executed the instrument.

(Signature of Notary Public)

JOAN T. SEERY
Notary Public, State of New York
No. 01SE4510550
Qualified in Suffolk County
Commission Exp. 1/31/14

CLEAN ENERGY

STATE OF California)
)ss.:
COUNTY OF ORANGE)

On the 3rd day of August in the year 2010, before me, the undersigned, a Notary Public in and for said state, personally appeared James Hanger

~~personally known to me or~~ proved to me on the basis of satisfactory evidence to be the individual whose name is subscribed to the within instrument and acknowledged that he executed the same in his capacity as chief marketing officer of CLEAN ENERGY, and that by his signature on the instrument, the individual, or the corporation upon behalf of which the individual acted, executed the instrument.

DEBRA JEAN VERA-PADILLA
COMM. #1762348
Notary Public - California
Orange County
My Comm. Expires Aug. 19, 2011

Debra Jean Vera-Padilla
(Signature of Notary Public)

Lease No. ANB-862

LEASE AGREEMENT

between

THE PORT AUTHORITY OF NEW YORK & NEW JERSEY

and

GAZ REALTY, INC.

Dated as of July 31, 2008

7

TABLE OF CONTENTS

Section 1.	Letting	1
Section 2.	Term	2
Section 3.	Rights of User	2
Section 4.	Rental	3
Section 5.	Condition of the Premises	10
Section 6.	Construction by the Lessee	10
Section 7.	Ingress and Egress	23
Section 8.	Compliance with Governmental Requirements	23
Section 9.	Rules and Regulations	24
Section 10.	Various Obligations of the Lessee	25
Section 11.	Prohibited Acts	27
Section 12.	Care, Maintenance, Rebuilding and Repair by the Lessee	30
Section 13.	Insurance	31
Section 14.	Damage to or Destruction of Premises	33
Section 15.	Indemnity and Liability Insurance	33
Section 16.	Signs	36
Section 17.	Obstruction Lights	37
Section 18.	Additional Rent and Charges	37
Section 19.	Rights of Entry Reserved	38
Section 20.	Condemnation	39
Section 21.	Assignment and Sublease	42
Section 22.	Termination	42
Section 23.	Right of Re-entry	44
Section 24.	Waiver of Redemption	44
Section 25.	Survival of the Obligations of the Lessee	45
Section 26.	Reletting by the Port Authority	46
Section 27.	Remedies to be Non-Exclusive	47
Section 28.	Surrender	47
Section 29.	Acceptance of Surrender of Lease	47
Section 30.	Effect of Basic Lease	47
Section 31.	Removal of Property	48
Section 32.	Brokerage	48
Section 33.	Limitation of Rights and Privileges Granted	48
Section 34.	Notices	49
Section 35.	Other Construction by the Lessee	49
Section 36.	Place of Payments	50
Section 37.	Additional Construction Work	50
Section 38.	Construction and Application of Terms	50
Section 39.	Non-liability of Individuals	51
Section 40.	Non-Discrimination	51

Section 41. Affirmative Action 52
Section 42. The Lessee's Additional Ongoing Affirmative Action - Equal Opportunity Commitment 52
Section 43. Quiet Enjoyment 54
Section 44. Infringement 55
Section 45. Late Charges 55
Section 46. Obligations In Connection with the Percentage/Variable Rental 56
Section 47. Towing and Emergency Services to be performed by the Lessee 57
Section 48. Sales and Services by the Lessee 63
Section 49. Postponement 65
Section 50. Services 65
Section 51. Utility Lines 65
Section 52. Relationship of the Parties 66
Section 53. Definitions 66
Section 54. Storage Tanks 69
Section 55. Federal Airport Aid 71
Section 56. Lessee's Rights Non-Exclusive 72
Section 57. One Hundred Twenty Day Termination 72
Section 58. Force Majeure 74
Section 59. Environmental Compliance 75
Section 60. Security Deposit 75
Section 61. Books and Records 77
Section 62. Other Agreements 78
Section 63. Operating Names 78
Section 64. Space Licenses 78
Section 65. Certain Environmental Testing and Clean-up Obligations 80
Section 66. Official Inspection Station 86
Section 67. Phase 1A Roadway Work 86
Section 68. Entire Agreement 91

Exhibits A, B, M and Z
Schedules A, E, F and X

THIS AGREEMENT SHALL NOT BE BINDING UPON THE PORT AUTHORITY UNTIL DULY EXECUTED BY AN EXECUTIVE OFFICER THEREOF AND DELIVERED TO THE LESSEE BY AN AUTHORIZED REPRESENTATIVE OP THE PORT AUTHORITY

Port Authority Lease No. ANB-862

AGREEMENT OF LEASE

THIS AGREEMENT OF LEASE, made effective as of the 31st day of July, 2008 by and between **THE PORT AUTHORITY OF NEW YORK AND NEW JERSEY** (hereinafter called "the Port Authority"), a body corporate and politic established by Compact between the States of New York and New Jersey with the consent of the Congress of the United States of America and having an office at 225 Park Avenue South, in the Borough of Manhattan, in the City, County and State of New York 10003, and **GAZ REALTY, INC. d/b/a NEWARK AIRPORT PLAZA INC.** (hereinafter called "the Lessee"), a corporation of the State of New York having an office and place of business at 366 North Broadway, Suite 206, Jericho, New York 11753, whose representative is George Abi Zeid,

WITNESSETH, That:

The Port Authority and the Lessee, for and in consideration of the covenants and mutual agreements hereinafter contained, hereby covenant and agree as follows:

Section 1. Letting

(a) The Port Authority hereby lets to the Lessee and the Lessee hereby hires and takes from the Port Authority at Newark Liberty International Airport (sometimes hereinafter referred to as "the Airport") in the City of Newark, County of Essex and State of New Jersey the ground space as shown in stipple on the drawing attached hereto, hereby made a part hereof and marked "Exhibit A", together with the fixtures, improvements and other property of the Port Authority located or to be located thereon, the said lands, fixtures, improvements and other property of the Port Authority (hereinafter collectively referred to as "the premises"). The parties acknowledge that the premises constitute non-residential real property.

(b) Except to the extent required for the performance of any of the obligations of the Lessee hereunder, nothing contained in this Agreement shall grant to the Lessee any rights whatsoever in the air space above the heights of the structures thereon.

Section 2. Term

The term of the letting under this Agreement shall commence on October 1, 2008 (the "Commencement Date") and shall, unless sooner terminated, expire on the day preceding the twentieth (20th) anniversary of the Rental Payment Start Date as defined in Section 4 of the Lease (the "Expiration Date").

Section 3. Rights of User

The Lessee shall use the premises for the purpose of constructing and operating a multi-fuel vehicle service station, including the operation of a first class convenience store and for no other purpose whatsoever and in connection therewith shall provide thereat the following sales and services and no other sales and services whatsoever:

(i) The sale and delivery of gasoline for trucks and automobiles;

(ii) The sale and delivery of diesel fuel for trucks and automobiles;

(iii) The sale and delivery of an environmentally friendly alternative fuel (compressed natural gas, biodiesel, ethanol, hydrogen) for trucks and automobiles;

(iv) The sale and delivery of motor oil;

(v) A dual bay car wash (one automated; one full service) for the cleaning of automobiles, light pick-up trucks and small vans;

(vi) The sale and delivery of automotive supplies, tires, parts and accessories;

(vii) The repair (electrical and mechanical only), maintenance and servicing of automobiles, light pick-up trucks and small vans only. It is hereby specifically understood and agreed that the foregoing shall not be provided to any other items of automotive equipment including but not limited to trailers and aircraft ground support vehicles.

(viii) Parking for disabled and towed vehicles (to accommodate at least 20 vehicles) and parking for no more than three (3) 55-foot trucks;

(ix) Public restrooms;

(x) Space for public telephones (the Lessee will not provide the telephone service);

(xi) An air pump for inflating tires;

(xii) The non-exclusive right to maintain at all times during the term of the letting an adequate towing service as defined and set forth in Section 47 of this Agreement.

(xiii) The sale, at retail of non-alcoholic beverages, snack foods, hot and cold sandwiches, soups, newspapers, tobacco, tobacco products, toiletries and such other products as shall be consented by the Port Authority in advance;

(xiv) The Lessee shall be permitted to operate one (1) automated teller machine.

(xv) The Lessee shall be permitted to sell lottery tickets issued by the New Jersey State Department of Tax and Finance.

Except as specifically provided in Section 47 of this Agreement, the parking, storage or garaging of automobiles, light pick-up trucks, large trucks, tractor trailers, aircraft ground support vehicles or any other vehicles at the premises is hereby expressly prohibited.

Section 4. Rental

A. Rental Obligation

(1) The Constant Factor of the Annual Ground Rental

(a) The Lessee agrees to pay to the Port Authority for the period from the Rental Payment Start Date, as hereinafter defined, and continuing through the balance of the term of the letting hereunder, both dates inclusive, a Ground Rental for the premises at the annual rate of Two Hundred Ten Thousand One Hundred Eight Dollars and No Cents ($210,108.00). The aforesaid annual Ground Rental is made up of two factors, one a constant factor in the amount of Seventy Eight Thousand Four Hundred Eight Four Dollars and No Cents ($78,484.00) and the other a variable factor in the amount of One Hundred Thirty One Thousand Six Hundred Twenty Four Dollars and No Cents ($131, 624.00). The constant factor is subject to escalation and adjustment as provided in subparagraph (b) of this Section 4. The variable factor aforesaid represents the Airport Services portion of the rental, is hereinafter referred to as "the Airport Services Factor" and is subject to adjustment as provided in subparagraph (c) below. The Lessee shall pay the said annual Ground Rental, in advance, in equal monthly installments of Six Thousand Five Hundred Forty Dollars and Thirty Three Cents ($6, 540.33) on the Rental Payment Start Date and on the first day of each and every month thereafter occurring during such period, provided, however, that, if the Rental Payment Start Date occurs on a day which is other than the first day of a month, the Ground Rental for the portion of the month during which the Rental Payment Start Date occurs following such date shall be the amount of the monthly installment prorated on a daily basis using the actual number of days in the said month.

(b) CPI Adjustments:

The following terms as used in this Section 4 shall have the respective meanings given below:

(1) "CPI" or "Consumer Price Index" shall mean the Consumer Price Index for all Urban Consumers, New York-Northern New Jersey, Long Island, NY- NJ-CT, (All Items unadjusted 1982-84=100) published by the Bureau of Labor Statistics of the United States Department of Labor.

(2) The Port Authority shall ascertain the CPI for the month in which the Rental Payment Start Date occurs and for the month in which the first year anniversary of the Rental Payment Start Date occurs and for the same calendar month in each year thereafter during the term of this Agreement after the same has been published, and the Port Authority shall also determine the annual percentage increase, if any, for each such twelve month period after the same has been published (hereinafter called "the annual CPI percentage increase").

(3) Effective on the first day of the month in which the first year anniversary of the Rental Payment Start Date occurs, and on the first day of every anniversary of the Rental Payment Start Date thereafter occurring during the term of the letting, the constant factor of the annual Ground Rental set forth above in paragraph (1)(a) of this subdivision I of this Section 4 (as the same may have been previously adjusted hereunder) shall be increased as follows: (i) the constant factor of the annual Ground Rental as set forth in said paragraph (1)(a) shall be multiplied by a percentage composed of 1/2 of the annual CPI percentage increase, if any, for the latest twelve month period using the same calendar month in accordance with subparagraph (2) above plus 100%; and (ii) the constant factor of the annual Ground Rental rate as set forth in said paragraph (1)(a) shall be multiplied by 104%; and the greater of the two products so obtained by the calculations set forth in the foregoing clauses (i) and (ii) shall be and become the constant factor of the annual Ground Rental in effect for the annual period commencing on the said first day of the month in which the first anniversary of the Rental Payment Start Date (or, on the first day of the applicable Rental Payment Start Date occurring thereafter during the term of the letting hereunder) occurs and ending on the last day of the immediately succeeding twelfth month.

(4) In the event that the Consumer Price Index for the calendar month to be used in determining such increase of the constant factor of the Ground Rental is not available as of the effective date of said increase, the Lessee shall continue to pay the constant factor of the Ground Rental at the rate then in effect subject to retroactive adjustment and a lump sum payment of any deficiency so determined at such time as the Index for said calendar month becomes available. In the event of the change of basis or the discontinuance of the publication by the United States Department of Labor of the Consumer Price Index such other appropriate index or indexes shall be substituted as may be agreed by the parties hereto as properly reflecting changes in the value of the current United States money in a manner similar to that established in the said indexes used in the latest adjustment. In the event of the failure of the parties to so agree, the Port Authority may select and use such index or indexes as it deems appropriate, provided, however, that the foregoing shall not preclude the Lessee from contesting the Port Authority's selection.

(5) In no event shall any annual rate of any constant factor of the rental established under this paragraph (b) be less than the annual rate of the constant factor of the rental it supersedes.

2. The Airport Services Factor of the Annual Ground Rental

(a) The Lessee shall pay to the Port Authority on account of the Airport Services Factor of the annual Ground Rental the amount of One Hundred Thirty One Thousand Six Hundred Twenty Four Dollars and No Cents ($131, 624.00), payable in equal monthly installments Ten Thousand Nine Hundred Sixty Eight Dollars and Sixty Seven Cents ($10, 968.67) on the Rental Payment Start Date and on the first day of each and every month thereafter occurring during the term of the lease, as adjusted pursuant to the provisions of Schedule A, attached hereto and hereby made a part hereof. After the close of calendar year and thereafter for each and every calendar year through the term of the letting, the Airport Services Factor shall be adjusted, upwards or downwards, in accordance with the provisions of Schedule A attached hereto and hereby made a part hereof. The constant factor of the Ground Rental shall adjust in accordance with paragraph (1)(b) of this Section (4).

(b) The Lessee understands and agrees that while the term of the Lease shall expire in 2028, the final Airport Services Factor for 2028 may not be determined for some months after the expiration and that the Lessee's obligations to pay any deficiency in the rental for the year 2027 and the applicable portion of 2028 or the Port Authority's obligation to pay a refund in said rental resulting from the determination of the final Airport Services Factor for the years 2027 and 2028 shall survive such expiration of the Lessee and shall remain in full force and effect until such deficiency or refund, if any, is paid. The Lessee hereby specifically acknowledges that neither the survival of the obligation with respect to any such deficiency or refund nor any other provision of this Agreement shall grant or shall be deemed to grant any rights whatsoever to the Lessee to have the term of the Lease extended for any period beyond the Expiration Date

(c) If the letting hereunder shall terminate on a day other than the last day of a calendar month, the installment of Ground Rental payable on the first day of the calendar month in which the effective date of termination shall occur shall be an amount equal to the amount of the applicable installment described in this Section multiplied by a fraction the numerator of which shall be the number of days from the first day of the calendar month in which the effective date of termination shall occur to the effective date of termination, both dates inclusive, and the denominator of which shall be the full number of days in that calendar month. If the monthly installment due on the first day of that month has not been paid the Lessee shall pay the prorated part of the amount of that installment; if the monthly installment has been paid, then the excess thereof shall be credited to the Lessee's obligations.

3. Percentage Rental

(a) The Lessee agrees to pay to the Port Authority an annual percentage rental equivalent to the sum of:

(i) Five percent (5 %) of all the gross receipts, as hereinafter defined, of the Lessee arising during each annual period, as hereinafter defined, which are in excess of Annual Exemption Amount-A, as hereinafter defined, from the sale of items shown in Section 3, except those set forth in Section 3 (i), (ii), (iii) and (xv); and

(ii) Three cents ($0.03) per gallon of gasoline sold by the Lessee during each annual period, which are in excess of Annual Exemption Amount –B, as hereinafter defined; and

(iii) Three cents ($0.03) per gallon of diesel fuel sold by the Lessee during each annual period, which are in excess of Annual Exemption Amount-C, as hereinafter defined; and

(iv) Three cents ($0.03) per gallon of compressed natural gas, biodiesel, ethanol and hydrogen sold by the Lessee during each annual period, which are in excess of Annual Exemption Amount-C; and

(v) Five percent (5%) of each transaction fee charged to the customer in connection with the use of the automated teller machined described in Section 3 (xiv) during each annual period, which are in excess of Annual Exemption Amount-A.

(b) The computation of the annual percentage rental for each annual period or a portion of an annual period as hereinafter provided shall be individual to such annual period or such portion of an annual period and without relation to any other annual period or portion of an annual period. For the purpose of calculating the percentage rental for any annual period that contains more or less than 365 days, the annual exemption amounts shall be prorated over the actual number of days contained in such annual period.

(c) The time for making payment of the basic and percentage rentals and the method of calculation thereof shall be as set forth in paragraph B of this Section.

4. As used herein:

(a) "Gross receipts" as used in this Agreement shall include all monies paid or payable to the Lessee for all sales and/or deliveries made or rendered at or from the premises and for all services (including but not limited to the Patron service, as defined in Section 47 of this Agreement) rendered at or from the Airport regardless of when or where the order therefor is received at the Airport, and any other revenues of any type arising out of or in connection with the Lessee's operations at the Airport, provided, however, that any taxes imposed by law which are separately stated to and paid by a customer and directly payable to the taxing authority by the Lessee shall be excluded therefrom, and provided, furthermore, that gross receipts shall not include (i) monies paid or payable by the Port Authority to the Lessee for the Emergency Service provided by the Lessee pursuant to Section 47 of this Agreement or (ii) sales made at or from the premises in connection with the sale of lottery tickets.

(b) "Rental Payment Start Date" shall mean the earlier of:

(i) The three hundredth (300) day following the Commencement Date, as defined in Section 2 of this Agreement, or

(ii) such earlier date following the completion by the Lessee of the improvement, finishing and installation work described in Section 6 hereof as may be designated by the Port Authority to the Lessee as the date on which public operations may be commenced in the premises.

The Lessee recognizes that the occurrence of the Commencement Date shall not be deemed to authorize the Lessee to commence any work in the premises unless the Port Authority's final approval of the Alteration Application and plans and specifications referred to in Section 6 hereof have been obtained by the Lessee. The Lessee further recognizes that its obligation to pay basic rental shall commence on the Rental Payment Start Date established pursuant to subparagraph (b) of this Section whether or not the Lessee is conducting public operations in the premises on such date.

(d) "Annual Period" shall mean, as the context requires, the twelve-month period commencing with the Rental Payment Start Date established pursuant to the provisions of this Agreement and each of the twelve-month periods thereafter occurring during the term of the letting, provided, however, that if the Rental Payment Start Date commences on other than the first day of a calendar month, the first annual period shall include the portion of the month which the Rental Payment Start Date falls following such date plus the succeeding 12 calendar months and each subsequent annual period shall commence on the anniversaries of the first day of the first full calendar month following the month in which the Rental Payment Start Date occurs.

(e) "Annual Exemption Amount –A shall mean the amount equivalent to Five Hundred Thousand Dollars and No Cents ($500,000.00); Annual Exemption Amount-B shall mean the amount equivalent to Three Million (3,000,000) gallons; Annual Exemption Amount –C shall mean an amount equivalent to One Million five Hundred Thousand (1,500,000) gallons.

B. Time of Payment and Computation of Amounts

(1) The Lessee shall pay the ground rental in advance, in equal monthly installments equal to 1/12 of the ground rental provided for in paragraph (1) of Subdivision A above commencing on the Rental Payment Start Date and on the first day of each and every month thereafter during the balance of the letting hereunder.

(2) The Lessee shall pay the percentage rental as follows: on the 20th day of the first month following the Rental Payment Start Date and on the 20th day of each and every month thereafter the Lessee shall render to the Port Authority a sworn statement showing (i) all of its gross receipts for the preceding month arising out of all its operations in the premises and separately showing the gross receipts for subdivisions (i) through (xv) in Section 3. At such time, the Lessee shall pay an amount to the Port Authority equivalent to the sum of the percentage amounts multiplied by the gross receipts arising in each of the aforesaid categories in accordance with the provisions set forth in Section 4A(3)(a). In addition to the foregoing, on the 20th day of the first month following each anniversary of the Rental Payment Start Date , the Lessee shall submit to the Port Authority a statement setting forth the cumulative amount of gross receipts arising during the preceding twelve (12) month period certified, at the Lessee's

sole cost and expense, by a certified public accountant, of all gross receipts arising during the period from the last preceding anniversary of the Rental Payment Start Date up to and including the last day this Agreement shall be in effect and the Lessee shall, at the time of rendering such statement to the Port Authority, pay the percentage rental due and unpaid as of the last day this Agreement shall be in effect.

(3) Upon any termination of the letting hereunder (even if stated to have the same effect as expiration), the Lessee shall, within twenty (20) days after the effective date of such termination, make a payment of rental computed as follows: first, if the letting hereunder is terminated effective on a date other than the last day of a calendar month, the basic rental for the portion of that month in which the letting remains effective shall be the amount of the monthly installment of basic rental prorated on a daily basis using the actual number of days in the month, and, if the monthly installment due on the first day of that month has not been paid, the Lessee shall pay the prorated part of the amount of that installment; if the monthly installment has been paid, then the excess thereof shall be credited to the Lessee's other obligations; second, the Lessee shall within twenty (20) days after the effective date of termination, render to the Port Authority a sworn statement separately showing all its gross receipts for the annual period in which the effective date of termination happens to fall; and third, the payment then due on account of the percentage rental for the annual period in which the effective date of termination falls shall be the excess over the prorated Annual Exemption Amount – A, stated in Section 4(A)(4)(e) above applied to all items shown in Section 3 (except those set forth in subdivisions (i), (ii), (iii) and (xv) of Section 3; and excess over the prorated Annual Exemption Amount-B, stated in Section 4(A)(4)(e) above applied to all the gallons of gasoline sold by the Lessee during such annual period; and the excess over the prorated Annual Exemption Amount –C applied to each gallon of diesel fuel, compressed natural gas, biodiesel, ethanol and hydrogen sold by the Lessee during such annual period, said annual exemption amounts shall be prorated as hereinabove provided, less any percentage rental payments previously made for such annual period..

(4) Nothing contained in this Section shall affect the survival of the obligations of the Lessee as set forth in Section 25 of this Agreement.

C. Abatement

(a)(i) During the period commencing on the Rental Payment Start Date and continuing through the day preceding the first (1st) anniversary of such date, both dates inclusive, in the event the Lessee shall at any time by the provisions of this Agreement become entitled to an abatement of Ground Rental, the constant factor of the Ground Rental shall be reduced for each calendar day or major fraction thereof that the abatement remains in effect at the constant factor daily rate of $0.003671 for each square foot of land the use of which is denied the Lessee subject to adjustment as provided herein (it being understood that there shall be no abatement of Ground Rental under the Lease for any portion of the premises other than land area or for any portion of the term except as specifically provided in this Agreement).

(ii) During the period commencing on the first anniversary of the Rental Payment Start Date and continuing through the balance of the term of the letting, both dates inclusive, in the event the Lessee shall at any time by the provisions of this Agreement

become entitled to an abatement of Ground Rental, the applicable constant factor of the Ground Rental shall be reduced for each calendar day or major fraction thereof that the abatement remains in effect at the applicable constant factor daily rate for each square foot of land the use of which is denied the Lessee subject to adjustment as provided herein (it being understood that there shall be no abatement of Ground Rental under the Lease for any portion of the premises other than the land area for any portion of the term except as specifically provided in this Agreement).

(iii) During any annual period from and after the first anniversary of the Rental Payment Start Date and continuing through the balance of the term of the letting hereunder, whenever the Lessee shall be entitled hereunder to an abatement of Ground Rental, the applicable annual Ground Rental amount established for such annual period shall be reduced in the same proportion as the applicable annual installment of Ground Rental for each annual period or portion thereof that the abatement is in effect.

(b)(i) In addition, during the period commencing on the Rental Payment Start Date and continuing through the day preceding the first (1st) anniversary of such date, both dates inclusive, the Airport Services Factor of the Ground Rental shall be reduced for each calendar day or major fraction thereof the abatement remains in effect for each square foot of land the use of which is denied the Lessee at the daily rate of $0.006157 (hereinafter the "variable rate") subject to adjustment as provided herein. No abatement of the Airport Services Factor shall be for other than land area.

(ii) After the close of calendar year and after the close of each calendar year thereafter, the Port Authority will adjust the variable rate, upwards or downwards, as provided in Schedule A. The resultant variable rate shall constitute the final variable abatement rate for the calendar year for which the adjustment is being made. It shall also constitute the tentative variable abatement rate for the calendar year in which such rate is calculated and for the following year until the next succeeding final variable abatement rate is calculated.

(iii) If there has been an abatement during a calendar year, any excess in the amount by which the Airport Services Factor is reduced for any calendar year resulting from the adjustment of the variable rate shall be paid to the Port Authority by the Lessee within (30) days after demand therefore and any deficiency in said amount determined on the basis of an adjusted variable rate shall be credited against future Ground Rentals, such credit to be made within thirty (30) days following adjustment of the variable rate.

(iv) The Lessee understands that while the final variable rate for the calendar year in which the expiration date of the Lease falls will not be determined for some months after such expiration and, if in fact there was an abatement during said calendar year, that the Lessee's obligations to pay any excess in the amount by which the Airport Services Factor may have been abated for said calendar year or the Port Authority's obligation to pay any deficiency in said amount resulting from the determination of the final variable rate for said calendar year shall survive such expiration of the Lease and shall remain in full force and effect until such excess of deficiency, if any, is paid. The Lessee hereby specifically acknowledges that

neither the survival of the obligation with respect to any such excess or deficiency nor any other provision of the Lease shall grant or shall be deemed to grant any rights whatsoever to the Lessee to have the term of the letting extended for any period beyond the expiration thereof or affect in any way the Port Authority's right to terminate this Agreement as provided herein.

Section 5. Condition of the Premises

(a) The Lessee hereby acknowledges that it has not relied upon any representation or statement of the Port Authority or its Commissioners, officers, employees or agents as to the condition of the premises, or its fitness for use as a multi-fuel vehicle service station. The Lessee, prior to the execution of this Agreement, has thoroughly examined the premises and determined them to be suitable for the Lessee's operation hereunder and the Lessee hereby agrees to take the premises in the condition they are in as of the commencement of the term of the letting hereunder and to assume all responsibility for any and all risks, costs and expenses of any kind whatsoever caused by, arising out of or in connection with, the condition of the premises whether any aspect of such condition existed prior to, on or after the effective date of the letting of the premises hereunder including without limitation all Environmental Requirements and Environmental Damages, and to indemnify and hold harmless the Port Authority for all such risks, requirements, costs and expenses. Without limiting any obligation of the Lessee to commence operations hereunder at the time and in the manner stated elsewhere in this Agreement, the Lessee agrees that no portion of the premises will be used initially or at any time during the letting which is in a condition unsafe or improper for the conduct of the Lessee's operations hereunder so that there is possibility of injury or damage to life or property. It is hereby understood and agreed that whenever reference is made in this Lease to the condition of the premises as of the commencement of the term thereof, the same shall be deemed to mean the condition of the premises as of the date of this Agreement, and as to the improvements made and the alteration work performed during the term of the Agreement in the condition existing after the completion of the same. The Lessee understands that it will be its responsibility to furnish and install (subject to the provisions of Section 6 of the Lease) all pumps, trade fixtures, accessories, equipment and other property including any necessary removal and demolition and to perform all work as may be necessary to put the multi-fuel service station in first class operating condition for the purposes set forth in Section 3 hereof.

(b) All the obligations of the Lessee under this Section with respect to the responsibilities, risks, costs and expenses assumed by the Lessee shall survive the expiration or termination of this Agreement.

Section 6. Construction by the Lessee

(a) The Lessee shall, prior to its submission to the Port Authority of the plans and specifications hereinafter provided for, submit to the Port Authority for its consent, the Lessee's comprehensive plan for the development of the site, including but not limited to renderings, layouts, locations, models, estimated commencement and completion dates, and preliminary functional plans.

(1) Without limiting the above, the Lessee agrees that said comprehensive plan shall include the construction on and under the site of:

(i) A multi- vehicle fuel service station, service bay area, waiting area, customer counter, dual bay car wash (one automated; one full service) , convenience store and restroom facilities consisting of approximately 3,200 square feet of space;

(ii) all appropriate lines, pipes, mains, cables, manholes, wires, tubes, ducts, assemblies, conduits and other facilities required in connection with or relating to the mechanical, utility, electrical, storm sewer, sanitary sewer, telephone, fire alarm, fire protection, gas, heating, ventilation and air-conditioning, steam, drainage, communications, and other systems needed for the multi-fuel service station and dual bay car wash (one automated; one full service) ;

(iii) all necessary or appropriate ground roadways, ramps, sidewalks, vehicular service areas, and pedestrian circulation areas, together with all related and associated areas and facilities, including an access ramp to the premises from the on-ramp to the Central Terminal Roadway (the foregoing being herein sometimes called the "circulation areas");

(iv) all grading and paving of ground areas and appropriate landscaping together with all related and associated work;

(v) all necessary or required fencing; and

(vi) All other appropriate or necessary work in connection with the foregoing items, including without limitation thereto, all borings, surveys, route marker signs, obstruction lights and material inspections and also including any tie-ins to utility lines and roadway access stubs.

(2) All of the foregoing work shall be constructed by the Lessee on the site and off the site where required, and where constructed on the site shall be and become a part of the premises under the Lease and is sometimes collectively referred to herein as the "construction work".

(3) The Lessee shall keep the comprehensive plan covered by this paragraph (a) up to date and shall submit to the Port Authority for its prior approval any amendments, revisions, or modifications thereof.

(b)(1) Prior to the commencement of the Construction Work, the Lessee shall cause to be delivered to the Port Authority a payment and performance bond in favor of the Port Authority (in the form attached hereto as Exhibit B and hereby made a part hereof) in an amount equal to the total contract price of the Construction Work in compliance with the approved plans

and specifications, protecting the Port Authority from monetary risk during, relating to or arising out of the construction work, issued by a surety company listed in the Financial Management Service of the United State Department of Treasury. Such payment and performance bond shall be in effect during the period from the commencement of the construction work to and including the Completion Date (as herein defined) and the Lessee shall keep and maintain said payment and performance bond in full force and effect. The said payment and performance bond shall be in an amount equal to the entire contract price for the construction work. Said payment and performance bond shall guarantee the full, faithful and prompt performance of and compliance with, on the part of the Lessee, all of the terms, provisions, covenants and conditions of this Agreement relating to the construction work. The existence of the payment and performance bond described in this Agreement shall not limit or alter any other remedies of the Port Authority under this Agreement, and the Port Authority may from time to time and at any time elect to pursue (or not to pursue) its rights under any payment and performance bond without thereby limiting, voiding or relinquishing any of its other rights or remedies under this Agreement.

(2) Prior to the commencement of the construction work, the Lessee shall submit to the Port Authority for the Port Authority's approval complete plans and specifications therefor. The Port Authority may refuse to grant approval with respect to the construction work if, in its opinion, any of the proposed construction work as set forth in said plans and specifications (all of which shall be in such detail as may reasonably permit the Port Authority to make a determination as to whether the requirements hereinafter referred to are met) shall:

(i) Be unsafe, unsound, hazardous or improper for the use and occupancy for which it is designed, or

(ii) Not comply with the Port Authority's requirements for harmony of external architecture of similar existing or future improvements at the Airport, or

(iii) Not comply with the Port Authority's requirements with respect to external and interior building materials and finishes of similar existing or future improvements at the Airport, or

(iv) Be designed for use for purposes other than those authorized under the Agreement, or

(v) Set forth ground elevations or heights other than those prescribed by the Port Authority, or

(vi) Not be at locations or not be oriented in accordance with the Lessee's approved comprehensive plan, or

(vii) Not comply with the provisions of the Basic Lease, as defined in the Section of this Agreement, entitled "Definitions", including without limiting the generality thereof, those provisions of the Basic Lease providing that the Port

Authority will conform to the enactments, ordinances, resolutions and regulations of the City of Newark and its various departments, boards and businesses in regard to the construction and maintenance of buildings and structures and in regard to health and fire protection which would be applicable if the Port Authority were a private corporation to the extent that the Port Authority finds it practicable so to do, or

(viii) Be in violation or contravention of any other provisions and terms of this Agreement, or

(ix) Not comply with all applicable governmental laws, ordinances, enactments, resolutions, rules and orders, or

(x) Not comply with all applicable requirements of the National Board of Fire Underwriters and the Fire Insurance Rating Organization of New Jersey, or

(xi) Not comply with the Port Authority's requirements with respect to landscaping, or

(xii) Not comply with Port Authority's requirements and standards with respect to noise, air pollution, water pollution or other types of pollution, or

(xiii) Not comply with the construction limitations set forth in Exhibit A, or

(xiv) Not comply with the American National Standard Specifications for Buildings and Facilities-Providing Accessibility and Usability for Physically Handicapped People, ANSI A117.1-1986.

(c) All construction work shall be done in accordance with the following terms and conditions:

(1) The Lessee hereby assumes the risk of loss or damage to all of the construction work prior to the completion thereof and the risk of loss or damage to all property of the Port Authority arising out of or in connection with the performance of the construction work. In the event of such loss or damage, the Lessee shall forthwith repair, replace and make good the construction work and the property of the Port Authority without cost or expense to the Port Authority. The Lessee shall itself and shall also require its contractors to indemnify and hold harmless the Port Authority, its Commissioners, officers, agents and employees from and against all claims and demands, just or unjust, of third persons (including employees, officers, and agents of the Port Authority) arising or alleged to arise out of the performance of the construction work and for all expenses incurred by it and by them in the defense, settlement or satisfaction thereof, including without limitation thereto, claims and demands for death, for personal injury or for property damage, direct or consequential, whether they arise from the acts or omissions of the Lessee, of any contractors of the Lessee, of the Port Authority, or of third

persons, or from acts of God or of the public enemy, or otherwise, (including claims of the City of New Jersey against the Port Authority pursuant to the provisions of the Basic Lease whereby the Port Authority has agreed to indemnify the City against claims), excepting only claims and demands which result solely from affirmative willful acts done by the Port Authority, its Commissioners, officers, agents and employees with respect to the construction work.

If so directed, the Lessee shall at its own expense defend any suit based upon any such claim or demand (even if such suit, claim or demand is groundless, false or fraudulent), and in handling such it shall not, without obtaining express advance written permission from the General Counsel of the Port Authority, raise any defense involving in any way the jurisdiction of the tribunal over the person of the Port Authority, the immunity of the Port Authority, its Commissioners, officers, agents or employees, the governmental nature of the Port Authority, or the provisions of any statutes respecting suits against the Port Authority.

(2) Prior to engaging or retaining an architect or architects for the construction work, the name or names of said architect or architects shall be submitted to the Port Authority for its approval. The Port Authority shall have the right to disapprove any architect who may be unacceptable to it. All construction work shall be done in accordance with plans and specifications to be submitted to and approved by the Port Authority prior to the commencement of the construction work, and until such approval has been obtained the Lessee shall continue to resubmit plans and specifications as required. Upon approval of such plans and specifications by the Port Authority, the Lessee shall proceed diligently at its sole cost and expense to perform the construction work. All construction work, including workmanship and materials, shall be of first class quality. The Lessee shall re-do, replace or construct at its own cost and expense, any construction work not done in accordance with the approved plans and specifications, the provisions of this Section 2 or any further requirements of the Port Authority.

The Lessee shall expend not less than Four Million Nine Hundred Fifty Thousand Dollars and No Cents ($4,950,000.00) with respect to the construction work. The Lessee shall complete the construction work no later than Three Hundred (300) days following the Commencement Date as defined in Section 2 of this Agreement.

(3) Prior to entering into a contract for any part of the construction work, the Lessee shall submit to the Port Authority for its approval the names of the contractors to whom the Lessee proposes to award said contracts. The Port Authority shall have the right to disapprove any contractor who may be unacceptable to it. The Lessee shall include in all such contracts such provisions and conditions as may be reasonably required by the Port Authority. Without limiting the generality of the foregoing all of the Lessee's construction contracts shall provide as follows: "If (i) the Contractor fails to perform any of his obligations under the Contract, including his obligation to the Lessee to pay any claims lawfully made against him by any materialman, subcontractor or workman or other third person which arises out of or in connection with the performance of the Contract or (ii) any claim (just or unjust) which arises out of or in connection with the Contract is made against the Lessee or (iii) any subcontractor under the Contract fails to pay any claims, lawfully made against him by any materialman, subcontractor, workman or other third persons which arises out of or in connection with the Contract or if in the Lessee's opinion any of the aforesaid contingencies is likely to arise, then the

Lessee shall have the right, in its discretion, to withhold out of any payment (final or otherwise and even though such payments have already been certified as due) such sums as the Lessee may deem ample to protect it against delay or loss or to assume the payment of just claims of third persons, and to apply such sums in such manner as the Lessee may deem proper to secure such protection or satisfy such claims. All sums so applied shall be deducted from the Contractor's compensation. Omission by the Lessee to withhold out of any payment, final or otherwise, a sum for any of the above contingencies, even though such contingency has occurred at the time of such payment, shall not be deemed to indicate that the Lessee does not intend to exercise its right with respect to such contingency. Neither the above provisions for rights of the Lessee to withhold and apply monies nor any exercise, or attempted exercise of, or omission to exercise such rights by the Lessee shall create any obligation of any kind to such materialmen, subcontractors, workmen or other third persons. Until actual payment is made to the Contractor, his right to any amount to be paid under the Contract (even though such amount has already been certified as due) shall be subordinate to the rights of the Lessee under this provision."

The Lessee shall file with the Port Authority a copy of its contracts with its contractors prior to start of the construction work.

(4) The Lessee shall furnish or require its architect to furnish a full time resident engineer during the construction period. The Lessee shall require certification by a licensed engineer of all pile driving data, if applicable, and of all controlled concrete work and such other certifications as may be requested by the Port Authority from time to time.

(5) The Lessee agrees to be solely responsible for any plans and specifications used by it and for any loss or damages resulting from the use thereof, notwithstanding that the same have been approved by the Port Authority and notwithstanding the incorporation therein of Port Authority recommendations or requirements. Notwithstanding the requirement for approval by the Port Authority of the contracts to be entered into by the Lessee or the incorporation therein of Port Authority requirements or recommendations, and notwithstanding any rights the Port Authority may have reserved to itself hereunder, the Port Authority shall have no liabilities or obligations of any kind to any contractors engaged by the Lessee or for any other matter in connection therewith and the Lessee hereby releases and discharges the Port Authority, its Commissioners, officers, representatives and employees of and from any and all liability, claims for damages or losses of any kind, whether legal or equitable, or from any action or cause of action arising or alleged to arise out of the performance of any construction work pursuant to the contracts between the Lessee and its contractors. Any warranties contained in any construction contract entered into by the Lessee for the performance of the construction work hereunder shall be for the benefit of the Port Authority as well as the Lessee, and the contract shall so provide.

(6) The Port Authority shall have the right, through its duly designated representatives, to inspect the construction work and the plans and specifications thereof, at any and all reasonable times during the progress thereof and from time to time, in its discretion, to take samples and perform testing on any part of the construction work.

(7) The Lessee agrees that it shall deliver to the Port Authority two (2) sets of "as built" drawings of the construction work in an electronic CADD data file on a CD Rom in a format to be designated by the Port Authority, all of which shall conform to the specifications of the Port Authority (the receipt of a copy of said specifications prior to the execution of this Lease being hereby acknowledged by the Lessee). The Lessee shall during the term of this Lease keep said digital electronic files of drawings and said electronic CADD data files current showing thereon any changes or modifications which may be made and provide copies thereof to the Port Authority as the Port Authority may request from time to time. No changes or modifications shall be made without prior Port Authority consent.

(8) The Lessee shall, if requested by the Port Authority, take all reasonable measures to prevent erosion of the soil and the blowing of sand during the performance of the construction work, including but not limited to the fencing of the premises or portions thereof or other areas and the covering of open areas with asphaltic emulsion or similar materials as the Port Authority may direct.

(9) Title to any soil, dirt, sand or other matter (hereinafter in this item (9) collectively called "the matter") excavated by the Lessee during the course of the construction work shall vest in the Port Authority and the matter (other than portions of the matter used by the Lessee in the construction work as may be approved by the Port Authority) shall be delivered by the Lessee at its expense to any location on the Airport as may be designated by the Port Authority or to any location off the Airport within the Port of New York District. The entire proceeds, if any, of the sale or other disposition of the matter shall belong to the Port Authority. Notwithstanding the foregoing the Port Authority may elect by prior written notice to the Lessee to waive title to all or portions of the matter in which event the Lessee at its expense shall dispose of the same without further instruction from the Port Authority;

(10) The Lessee shall pay or cause to be paid all claims lawfully made against it by its contractors, subcontractors, materialmen and workmen, and all claims lawfully made against it by other third persons arising out of or in connection with or because of the performance of the construction work, and shall cause its contractors and subcontractors to pay all such claims lawfully made against them, provided, however, that nothing herein contained shall be construed to limit the right of the Lessee to contest any claim of a contractor, subcontractor, materialman, workman and/or other person and no such claim shall be considered to be an obligation of the Lessee within the meaning of this Section unless and until the same shall have been finally adjudicated. The Lessee shall use its best efforts to resolve any such claims and shall keep the Port Authority fully informed of its actions with respect thereto. Nothing herein contained shall be deemed to constitute consent to the creation of any liens or claims against the premises nor to create any rights in said third persons against the Port Authority or the Lessee.

(11) (i) The Lessee in its own name as insured and including the Port Authority as an additional insured shall procure and maintain Comprehensive General Liability insurance, including but not limited to premises-operations, products liability-completed operations, explosion, collapse and underground property damages, personal injury and independent contractors, with a broad form of property damage endorsement, and with a

contractual liability endorsement covering the obligations assumed by the Lessee pursuant to subparagraphs (1) and (5) of this paragraph (c), and Comprehensive Automobile Liability insurance covering owned, non-owned and hired vehicles. The said Comprehensive General Liability insurance policy shall have a limit of not less than $25,000,000 combined single limit per accident for bodily injury and property damage liability. The said Automobile Liability insurance policy shall have a limit of not less than $5,000,000 per accident for bodily injury and property damage liability.

Without limiting the provisions hereof, in the event the Lessee maintains the foregoing insurance in limits greater than aforesaid, the Port Authority shall be included therein as an additional insured to the full extent of all such insurance in accordance with all the terms and provisions hereof.

The foregoing shall be in addition to all policies of insurance otherwise required by this Agreement, or the Lessee may provide such insurance by requiring each contractor engaged by it for the construction work to procure and maintain such insurance including such contractual liability endorsement, said insurance, whether procured by the Lessee or by a contractor engaged by it as aforesaid, not to contain any exclusion for bodily injury to or sickness, disease or death of any employee of the Lessee or of any of its contractors which would conflict with or in any way impair coverage under the contractual liability endorsement. Further, the Lessee shall provide and maintain or cause its contractors to provide and maintain contractor's property and equipment coverage for the full value of such property and equipment with the Port Authority insured thereunder as its interests may appear. All of the aforesaid policy or policies of insurance shall also provide or contain an endorsement providing that the protections afforded the Lessee thereunder with respect to any claim or action against the Lessee by a third person shall pertain and apply with like effect with respect to any claim or action against the Lessee by the Port Authority, and shall also provide or contain an endorsement providing that the protections afforded the Port Authority thereunder with respect to any claim or action against the Port Authority by the Lessee or its contractor(s) shall be the same as the protections afforded the Lessee thereunder with respect to any claim or action against the Lessee by a third person as if the Port Authority were the named insured thereunder; but such provision or endorsement shall not limit, vary or affect the protections afforded the Port Authority thereunder as an additional insured.

(ii) The Lessee shall also procure and maintain in effect, or cause to be procured and maintained in effect Workers' Compensation Insurance and Employer's Liability Insurance in accordance with and as required by law.

(iii) The insurance required hereunder in this subparagraph (11) shall be maintained in effect during the performance of the construction work and shall be in compliance and subject to the provisions of paragraph (c) of Section 14 hereof.

(12)The Lessee shall be under no obligation to reimburse the Port Authority for expenses incurred by the Port Authority in connection with its normal review and approval of the original plans and specifications submitted by the Lessee pursuant to this Section. The Lessee however agrees to pay to the Port Authority upon its demand the expenses incurred by the

Port Authority in connection with any additional review for approval of any changes, modifications or revisions of the original plans and specifications which may be proposed by the Lessee for the Port Authority's approval. The expenses of the Port Authority for any such additional review and approval shall be computed on the basis of direct payroll time expended in connection therewith plus 100%. Wherever in this Lease reference is made to "direct payroll time", costs computed thereunder shall include a prorata share of the cost to the Port Authority of providing employee benefits, including, but not limited to, pensions, hospitalization, medical and life insurance, vacations and holidays. Such computations shall be in accordance with the Port Authority's accounting principles as consistently applied prior to the execution of this Lease.

(13)The Lessee shall prior to the commencement of construction and at all times during construction submit to the Port Authority all engineering studies with respect to construction and samples of construction materials as may be required at any time and from time to time by the Port Authority.

(14)The Lessee shall procure and maintain Builder's Risk (All Risk) Completed Value Insurance covering the construction work during the performance thereof including material delivered to the site but not attached to the realty. Such insurance shall be in compliance with and subject to the applicable provisions of Section 13 hereof and shall name the Port Authority, the City of Newark, the Lessee and its contractors and subcontractors as additional insureds and such policy shall provide that the loss shall be adjusted with and payable to the Lessee. Such proceeds shall be used by the Lessee for the repair, replacement or rebuilding of the construction work and any excess shall be paid over to the Port Authority. The policies or certificates representing insurance covered by this paragraph (14) shall be delivered by the Lessee to the Port Authority at least thirty (30) days prior to the commencement of the construction work, and each policy or certificate delivered shall bear the endorsement of or be accompanied by evidence of payment of the premium thereof and, also, a valid provision obligating the insurance company to furnish the modification of the insurance evidenced by said policy or certificate. Renewal policies or certificates shall be delivered to the Port Authority at least fifteen (15) days before the expiration of the insurance which such policies are to renew.

The insurance covered by this paragraph (14) shall be written by companies approved by the Port Authority. If at any time any of the insurance policies shall be or become unsatisfactory to the Port Authority as to the form or substance or if any of the carriers issuing such policies shall be or become unsatisfactory to the Port Authority, the Lessee shall promptly obtain a new and satisfactory policy in replacement. If at any time the Port Authority so requests, a certified copy of each of the said policies shall be delivered to the Port Authority.

(15)The Lessee shall at the time of submitting the comprehensive plan to the Port Authority as provided in paragraph (a) hereof submit to the Port Authority its forecasts of the number of people who will be working at various times during the term of the Lease at the premises, the expected utility demands of the premises, noise profiles and such other information as the Port Authority may require. The Lessee shall continue to submit its latest forecasts and such other information as may be required as aforesaid as the Port Authority shall from time to time and at any time request.

(16)The Lessee shall execute and submit for the Port Authority's approval a Construction Application or Applications in the form prescribed by the Port Authority covering the construction work or portions thereof. The Lessee shall comply with all the terms and provisions of the approved Construction Applications. In the event of any inconsistency between the terms of any Construction Application and the terms of this Lease, the terms of this Lease shall prevail and control.

(17)Nothing contained in this Lease shall grant or be deemed to grant to any contractor, architect, supplier, subcontractor or any other person engaged by the Lessee or any of its contractors in the performance of any part of the construction work any right of action or claim against the Port Authority, its Commissioners, officers, agents and employees with respect to any work any of them may do in connection with the construction work. Nothing contained herein shall create or be deemed to create any relationship between the Port Authority and any such performance of any part of the construction work and the Port Authority shall not be responsible to any of the foregoing for any payments due or alleged to be due thereto for any work performed or materials purchased in connection with the construction work.

(18)(i) Without limiting any of the terms and conditions of this Lease, the Lessee understands and agrees that it shall put into effect prior to the commencement of any construction work an affirmative action program and Minority Business Enterprise (MBE) program and Women-owned Business Enterprise (WBE) program in accordance with the provisions of Schedule E, attached hereto and hereby made a part hereof. The provisions of said Schedule E of this Lease shall be applicable to the Lessee's contractor or contractors and subcontractors at any tier of construction as well as to the Lessee itself and the Lessee shall include the provisions of said Schedule E within all of its construction contracts so as to make said provisions and undertaking the direct obligation of the construction contractor or contractors and subcontractors at any tier of construction. The Lessee shall and shall require its said contractor, contractors and subcontractors to furnish to the Port Authority such data, including but not limited to compliance reports relating to the operation and implementation of the affirmative action, MBE and WBE programs called for hereunder as the Port Authority may request at any time and from time to time regarding the affirmative action, Minority Business Enterprises and Women-owned Business Enterprises programs of the Lessee and its contractor, contractors, and subcontractors at any tier of construction, and the Lessee shall and shall also require that its contractor, contractors and subcontractors at any tier of construction make and put into effect such modifications and additions thereto as may be directed by the Port Authority pursuant to the provisions hereof and said Schedule E to effectuate the goals of affirmative action and Minority Business Enterprise and Women-owned Business Enterprise programs.

(ii) In addition to and without limiting any terms and provisions of this Lease, the Lessee shall provide in its contracts and all subcontracts covering the construction work or any portion thereof, that:

(aa) The contractor shall not discriminate against employees or applicants for employment because of race, creed, color, national origin, sex, age, disability or marital status, and shall undertake or continue existing programs of

affirmative action to ensure that minority group persons are afforded equal employment opportunity without discrimination. Such programs shall include, but not be limited to; recruitment, employment, job assignment, promotion, upgrading, demotion, transfer, layoff, termination, rates of pay or other forms of compensation, and selections for training or retraining, including apprenticeships and on-the-job training;

(bb) At the request of either the Port Authority or the Lessee, the contractor shall request such employment agency, labor union, or authorized representative of workers with which it has a collective bargaining or other agreement or understanding and which is involved in the performance of the contract with the Lessee to furnish a written statement that such employment agency, labor union or representative shall not discriminate because of race, creed, color, national origin, sex, age, disability or marital status and that such union or representative will cooperate in the implementation of the contractor's obligations hereunder;

(cc) The contractor will state, in all solicitations or advertisements for employees placed by or on behalf of the contractor in the performance of the contract, that all qualified applicants will be afforded equal employment opportunity without discrimination because of race, creed, color, national origin, sex, age, disability or marital status;

(dd) The contractor will include the provisions of subparagraphs (aa) through (cc) of this paragraph in every subcontract or purchase order in such a manner that such provisions will be binding upon each subcontractor or vendor as to its work in connection with the contract;

(ee) "Contractor" as used herein shall include each contractor and subcontractor at any tier of construction.

(d) (1) The construction work shall be constructed in such a manner that there will be at all times a minimum of air pollution, water pollution or any other type of pollution and a minimum of noise emanating from, arising out of or resulting from the operation, use or maintenance thereof by the Lessee and from the operations of the Lessee under this Agreement. Accordingly, and in addition to all other obligations imposed on the Lessee under this Agreement and without diminishing, limiting, modifying or affecting any of the same, the Lessee shall be obligated to construct as part of the construction work hereunder such structures, fences, equipment, devices and other facilities as may be necessary or appropriate to accomplish the foregoing and each of the foregoing shall be and become a part of construction work it affects and all of the foregoing shall be covered under the comprehensive plan of the Lessee submitted under paragraph (a) hereof and shall be part of the construction work hereunder.

(2) Notwithstanding the provisions of subparagraph (1) above and in addition thereto, the Port Authority hereby reserves the right from time to time and at any time during the term of the Lease to require the Lessee, subsequent to the completion of the construction work to design and construct at its sole cost and expense such further reasonable structures, fences, equipment, devices and other facilities as may be necessary or appropriate to

accomplish the objectives as set forth in the first sentence of said Subparagraph (1). All locations, the manner, type and method of construction and the size of any of the foregoing shall be determined by the Port Authority. The Lessee shall submit for Port Authority approval its plans and specifications covering the required work and upon receiving such approval shall proceed diligently to construct the same. All other provisions of this Section 6 with respect to the construction work shall apply and pertain with like effect to any work which the Lessee is obligated to perform pursuant to this paragraph (d) and upon completion of each portion of such work it shall be and become a part of the construction work. The obligations assumed by the Lessee under this paragraph (d) are a special inducement and consideration to the Port Authority in granting this Lease to the Lessee.

(e) Title to all the construction work shall pass to the City of Newark the same or any part thereof is erected, constructed or installed, and shall be and become a part of the premises if located within the site.

(f) (1) When the construction work is substantially completed and ready for use the Lessee shall advise the Port Authority to such effect and shall deliver to the Port Authority a certificate signed by an authorized officer of the Lessee and also signed by the Lessee's licensed architect or engineer certifying that the construction work has been constructed in accordance with the approval plans and specifications and the provisions of this Lease and in compliance with all applicable laws, ordinances and governmental rules, regulations and orders. Thereafter, the construction work will be inspected by the Port Authority and if the same has been completed as certified by the Lessee and the Lessee's licensed architect or engineer, as aforesaid, a certificate to such effect shall be delivered to the Lessee, subject to the condition that all risks thereafter with respect to the construction and installation of the same and any liability therefor for negligence or other reason shall be borne by the Lessee. The Lessee shall not use or permit the use of the construction work or any portion thereof for the purposes set forth in the Lease until such certificate is received from the Port Authority and the Lessee shall not use or permit the use of the construction work or any portion thereof even if such certificate is received if the Port Authority states in any such certificate that the same cannot be used until other specified portions are completed.

(2) The term "Completion Date" for the purposes of this Lease shall mean the date appearing on the certificate issued by the Port Authority pursuant to subparagraph (1) of this paragraph (f).

(3) In addition to and without affecting the obligations of the Lessee under the preceding subparagraphs (1) and (2), when an integral and material portion of the construction work is substantially completed or is properly usable the Lessee may advise the Port Authority to such effect and may deliver to the Port Authority a certificate signed by an authorized officer of the Lessee and also signed by the Lessee's licensed architect or engineer certifying that such portion of the construction work has been constructed in accordance with the approved plans and specifications and the provisions of this Lease and in compliance with all applicable laws, ordinances and governmental rules, regulations and orders, and specifying that such portion of the construction work can be properly used even though the construction work has not been completed and that the Lessee desires such use. The Port Authority may in its sole

discretion deliver a certificate to the Lessee with respect to each such portion of the construction work permitting the Lessee to use such portion thereof for the purposes set forth in the Lease. In such event the Lessee may use such portion subject to the condition that all risks thereafter with respect to the construction and installation of the same and any liability therefor for negligence or other reason shall be borne by the Lessee, and subject to the risks as set forth in paragraph (d) hereof in the event that the Port Authority shall not have then approved the complete plans and specifications for the construction work. Moreover, at any time prior to the issuance of the certificate required in subparagraph (1) above for the construction work, the Lessee shall promptly upon receipt of a written notice from the Port Authority cease its use of such portion of the construction work which it had been using pursuant to permission granted in this subparagraph (3).

(g) The Lessee understands that there may be communications and utility lines and conduits located on or under the site, which do not, and may not in the future, serve the premises. The Lessee agrees at its sole cost and expense, if directed by the Port Authority so to do, to relocate and reinstall such communications and utility lines and conduits on the site or off the site as directed by the Port Authority and to restore all affected areas (such work being hereinafter collectively called "the relocation work"). The Lessee shall perform the relocation work subject to and in accordance with all the terms and provisions of this Section 6 and the relocation work shall be and become a part of the construction work, it being understood, however, that the relocation work shall not be or become a part of the premises hereunder.

(h) The Lessee will give the Port Authority fifteen (15) days' notice prior to the commencement of construction. The Port Authority will assign a field engineer to the Construction Work for such periods of time as the Port Authority, in its sole discretion, shall deem desirable from time to time up to and including five (5) days per week. The Lessee shall pay to the Port Authority for the services of said engineer at the following daily rates (prorated approximately for periods of less than one day): the rate of $835.00 per day from January 1, 2008 to and including December 31, 2008; and at the rate of $870.00 per day for the period from January 1, 2009 to and including December 31, 2009. Nothing herein shall prevent the Lessee from requesting the Port Authority to assign said engineer more frequently than as set forth herein, or the Port Authority from complying with such request, but the Port Authority shall not be obligated to do so. Nothing contained herein shall affect any of the provisions of paragraph (f) hereof or the rights of the Port Authority thereunder.

(i) Nothing contained in the Lease shall grant or be deemed to grant any contractor, architect, supplier, subcontractor or any other person engaged by the Lessee or any of its contractors in the performance of any part of the construction work any right of action or claim against the Port Authority, its Commissioners, officers, agents and employees with respect to any work any of them may do in connection with the construction work. Nothing contained herein shall create or be deemed to create any relationship between the Port Authority and any such contractor, architect, supplier, subcontractor or any other person engaged by the Lessee or any of its contractors in the performance of any part of the construction work and the Port Authority shall not be responsible to any of the foregoing for any payments due or alleged to be due thereto for any work performed or materials purchased in connection with the construction work.

Section 7. Ingress and Egress

(a) The Lessee, its officers, employees, customers, patrons, invitees, contractors, suppliers of material and furnishers of services, shall have the right of ingress and egress between the premises and a city street or public ways outside the Airport by means of such pedestrian roadways to be used in common with others having rights of passage within the Airport, provided, however, that the Port Authority may from time to time substitute other reasonably equivalent means of ingress and egress.

(b) The use of any such roadway shall be subject to the Rules and Regulations of the Port Authority which are now in effect or which may hereafter be promulgated for the safe and efficient operation of the Airport. The Port Authority may, at any time, temporarily or permanently close, or consent to or request the closing of any such roadway and any other area at the Airport presently or hereafter used as such, so long as a reasonable means of ingress and egress as provided in paragraph (a) above is concurrently made available to the Lessee. The Lessee hereby releases and discharges the Port Authority, its successors and assigns, of and from any and all claims, demands or causes of action which the Lessee may now or at any time hereafter have against any of the foregoing, arising or alleged to arise out of the closing of any street, roadway, or other area, whether within or outside the Airport.

Section 8. Compliance with Governmental Requirements

(a) The Lessee shall promptly observe comply with and execute the provisions of any and all present and future governmental laws, rules and regulations, orders and directions which may pertain or apply to (i) the premises, (ii) the operations of the Lessee on the premises hereunder or the Airport, (iii) the occupancy or use of the premises or (iv) with regard to Environmental Requirements only, property outside the premises as a result of the Lessee's use and occupancy of the premises or a migration of Hazardous substances from the premises. The Lessee shall, in accordance with and subject to the provisions of Section 6 hereof, make any and all structural and non-structural improvements, alterations or repairs of the premises and perform all remediation work and clean up of Hazardous Substances required in order to fully satisfy the compliance obligations set forth herein.

(b) The Lessee shall procure from all governmental authorities having jurisdiction over the operations of the Lessee hereunder and shall maintain in full force and effect throughout the term of this Agreement all licenses, certificates, permits or other authorization which may be necessary for the conduct of such operations. "Governmental authority" shall not be construed as intending to include the Port Authority of New York and New Jersey, the lessor under this Agreement.

(c) The obligation of the Lessee to comply with governmental requirements is provided herein for the purpose of assuring proper safeguards for the protection of persons and

property on the premises. Such provision is not to be construed as a submission by the Port Authority to the application to itself of such requirements or any of them.

(d) Since the Port Authority has agreed in the Basic Lease to conform to the enactments, ordinances, resolutions and regulations of the City of Newark and its various departments, boards and bureaus in regard to the construction and maintenance of buildings and structures and in regard to health and fire protection which would be applicable if the Port Authority were a private corporation to the extent that the Port Authority finds it practicable so to do, the Lessee shall comply with all such enactments, ordinances, resolutions and regulations which would be applicable to its operations hereunder if the Port Authority were a private corporation, except in cases where the Port Authority either notifies the Lessee that it need not comply with or directs it not to comply with any such enactments, ordinances, resolutions or regulations which are applicable only because of the Port Authority's agreement in the Basic Lease. The Lessee shall, for the Port Authority's information, deliver to the Port Authority promptly after receipt of any notice, warning, summons, or other legal process for the enforcement of any such enactment, ordinance, resolution or regulation a true copy of the same. Any direction by the Port Authority to the Lessee not to comply with any such enactment, ordinance, resolution or regulation shall be given only pursuant to a resolution duly adopted by the Board of Commissioners of the Port Authority or by an authorized committee of its Board and if any such direction is given by the Port Authority to the Lessee, the Port Authority, to the extent that it may lawfully do so, shall indemnify and hold the Lessee harmless from and against all claims, actions, damages, liabilities, fines, penalties, costs and expenses suffered or incurred by the Lessee as a result of noncompliance with such enactment, ordinance, resolution or regulation.

(e) The Lessee shall have such time within which to comply with the aforesaid laws, ordinances, rules and regulations as the authorities enforcing the same shall allow.

Section 9. Rules and Regulations

(a) The Lessee covenants and agrees to observe and obey (and to require its officers, employees, guests, invitees and those doing business with it to observe and obey) the Rules and Regulations of the Port Authority as now supplemented and now in effect, and such further rules and regulations (including amendments and supplements thereto) applying to the conduct and operations of the Lessee and others on the premises as may from time to time during the letting be promulgated by the Port Authority for reasons of safety, health, or the preservation of property, or for the maintenance of the good and orderly appearance of the premises, or for the safe or efficient operation of the Airport. The obligation of the Lessee to require such observance and obedience on the part of its guests, invitees and business visitors shall obtain only while such persons are on the premises. The Port Authority agrees that except in cases of emergency, it will give notice to the Lessee of every such future rule or regulation adopted by it at least five (5) days before the Lessee shall be required to comply therewith.

(b) If a copy of the Rules and Regulations is not attached, then the Port Authority will notify the Lessee thereof either by delivery of a copy, or by making a copy available at the office of the Secretary of the Port Authority.

Section 10. Various Obligations of the Lessee

(a) The Lessee shall conduct its operations hereunder in an orderly and proper manner, so as not to annoy, disturb or be offensive to others at the Airport. The Lessee shall take all reasonable measures to (1) eliminate vibrations tending to damage any equipment, structure, building or portion of a building which is on the premises, or is a part thereof, or is located elsewhere on the Airport, and (2) to keep the sound level of the operations as low as possible.

(b) The Lessee shall, control the conduct, demeanor and appearance of its employees and invitees and of those doing business with it, and upon objection from the Port Authority concerning the conduct, demeanor or appearance of any such shall immediately take all lawful steps necessary to remove the cause of the objection. If requested by the Port Authority the Lessee shall supply and shall require its employees to wear or carry badges or other suitable means of identification, which shall be subject to the prior and continuing approval of the General Manager of the Airport.

(c) The Lessee shall control all vehicular traffic on the roadways or other areas within the premises and shall take all precautions necessary to promote the safety of its patrons and other persons using such roadways and other areas. The Lessee shall employ such means as may be necessary to direct the movement of vehicular traffic within the premises to prevent traffic congestion on the public roadways leading to the premises.

(d) The Lessee shall daily remove from the Airport by means of facilities provided by it all garbage, debris, and other waste material (whether solid or liquid) arising out of or in connection with its operations hereunder. Any such which may be temporarily stored in the open shall be kept in suitable garbage and waste receptacles, the same to be made of metal or other suitable material, and equipped with tight-fitting covers, and to be of a design safely and properly to contain whatever material may be placed therein; said receptacles being provided and maintained by the Lessee. The receptacles shall be kept covered except when filling or emptying the same. The Lessee shall use extreme care when effecting removal of all such waste material, and shall effect such removal at such times and by such means as first approved by the Port Authority. No facilities of the Port Authority shall be used for such removal unless with its prior consent in writing. No such garbage, debris, or other waste materials shall be or be permitted to be thrown, discharged or deposited into or upon the waters at or bounding the Airport.

(e) From time to time and as often as reasonably required by the Port Authority, the Lessee shall conduct pressure, water-flow, and other appropriate tests of the fire-extinguishing system and apparatus which constitute a part of the premises. The Lessee shall keep in proper functioning order all fire-fighting equipment on the premises and the Lessee shall at all times maintain on the premises adequate stocks of fresh, usable chemicals for use in such system, apparatus and equipment. The Lessee shall notify the Port Authority prior to conducting such tests. If requested by the Port Authority, the Lessee shall furnish the Port Authority with a copy of written reports of such tests.

(f) In addition to compliance by the Lessee with all laws, ordinances, governmental rules, regulations and orders now or at any time in effect during the term of the letting hereunder which as a matter of law are applicable to the operation, use or maintenance by the Lessee of the premises or the operations of the Lessee under this Agreement (the foregoing not to be construed as a submission by the Port Authority to the application to itself of such requirements or any of them), the Lessee agrees that it shall exercise the highest degree of safety and care and shall conduct all its operations under this Agreement and shall operate, use and maintain the premises in accordance with the highest standards of the automotive service station industry and in such manner that there will be at all times a minimum of air pollution, water pollution or any other type of pollution and a minimum of noise emanating from, arising out of or resulting from the operation, use or maintenance of the premises by the Lessee and from the operations of the Lessee under this Agreement. The Port Authority hereby reserves the right from time to time and at any time during the term of the Lease to require the Lessee, and the Lessee agrees, to design and construct at its sole cost and expense such reasonable structures, fences, equipment, devices and other facilities as may be necessary or appropriate to accomplish the objectives as set forth in the first sentence of this paragraph. All locations, the manner, type and method of construction and the size of any of the foregoing shall be determined by the Port Authority. The Lessee shall submit for Port Authority approval its plans and specifications covering the required work and upon receiving such approval shall proceed diligently to construct the same.

The obligations assumed by the Lessee under this paragraph (f) shall continue throughout the term of this Lease and shall not be limited, affected, impaired or in any manner modified by the fact that the Port Authority shall have approved any Construction Application and supporting plans, specifications and contracts covering construction work and notwithstanding the incorporation therein of the Port Authority's recommendations or requirements and notwithstanding that the Port Authority may have at any time during the term of the Lease consented to or approved any particular procedure or method of operation which the Lessee may have proposed, or the Port Authority may have itself prescribed the use of any procedure or method.

(g) The Lessee shall periodically inspect, clean out and maintain the oil separators serving the premises which are located on the premises, if any, and the oil separators located outside the premises, if any, if they exclusively service the premises.

(h) Without limiting any other of the Lessee's operations under the Lease, the Lessee shall provide the General Manager of the Airport at the cost and expense of the Lessee with such information, documentation, records, correspondence, notices, reports, tests, results, and certifications and any other information as the Port Authority shall request in connection with any Environmental Requirements or Environmental Damages, and the Lessee shall promptly acknowledge, swear to, sign or otherwise fully execute the same. The Lessee agrees that any of the foregoing may be filed by the Port Authority with the appropriate governmental authority on behalf of the Lessee at the Lessee's cost and expense. Further, the Lessee agrees unless directed otherwise by the Port Authority, to provide the General Manager of the Airport with copies of all information, documentation, records, correspondence, notice, certifications, reports, test results and all other submissions provided by the Lessee to a governmental authority

and by a governmental authority to the Lessee within two (2) business days that the same are made available to or received by the Lessee with respect to any Environmental Requirements.

(i) In addition to and without limiting the generality of the obligations of the Lessee set forth above and elsewhere in the Lease, the Lessee shall at its sole cost and expense and in accordance with and subject to the provisions of Section 6 hereof, upon notice from the Port Authority, promptly take all actions to completely remove and remediate all Hazardous Substances on the premises or the Airport which result from the Lessee's use and occupancy of the premises or which have been disposed of, released, discharged or otherwise placed on, under or about the premises during the term of the letting hereunder, and to cleanup and remediate all other Hazardous Substances on, about or under the premises or which have migrated from the premises to any adjoining property, which any federal, state or local governmental agency or political subdivision or any Environmental Requirement or any violation thereof require to be remediated, and to cleanup and remediate all Hazardous Substances necessary to mitigate Environmental Damages. The foregoing obligations of the Lessee shall include without limitation the investigation of the environmental condition of the area to be remediated, the presentation of feasibility studies, reports and remedial plans and the performance of any cleanup, remediation, containment, operation, maintenance, monitoring or restoration work; the standard for any of the foregoing to be that standard as required under Environmental Requirements and in the event that any Environmental Requirement sets forth more than one standard, the standard to be applied shall be that which requires the lowest level of a Hazardous Substance. The Lessee agrees that, notwithstanding the foregoing, the Port Authority shall have the right at any time and from time to time, acting in its sole discretion, to designate any standard or standards of remediation or cleanup permitted or required under any Environmental Requirement, and such designation shall be binding upon the Lessee with respect to its obligations hereunder. Any actions of the Lessee under the foregoing shall be performed in a good, safe and workmanlike manner and shall minimize any impact on activities off the premises. The Lessee shall promptly provide to the Port Authority all copies of test results and reports generated in connection with such actions. Promptly upon completion of such investigation and remediation, the Lessee shall seal or cap all monitoring wells and test holes, remove all associated equipment and restore the remediated property.

Section 11. <u>Prohibited Acts</u>

(a) The Lessee shall commit no unlawful nuisance, waste or injury on the premises or at the Airport, and shall not do or permit to be done anything which may result in the creation or commission or maintenance of such nuisance, waste or injury on the premises.

(b) The Lessee shall not create nor permit to be caused or produced upon the premises, to permeate the same or to emanate therefrom any unusual, noxious or objectionable smokes, gases, vapors or odors except such as are necessarily incidental to the normal operations of the Lessee in the conduct of its operations granted under Section 3 of this Agreement.

(c) The Lessee shall not do or permit to be done anything which may interfere with the effectiveness or accessibility of the drainage and sewer system, water system, communications system, electrical system, fire protection system, sprinkler system, alarm

system, fire hydrants and hoses and other systems, if any, installed or located on, under, or in the premises.

(d) The Lessee shall not do or permit to be done any act or thing upon the premises or at the Airport (1) which will invalidate or prevent the issuance of or conflict with any fire insurance, extended coverage or rental insurance policies covering the premises or any part thereof, or the Airport, or any part thereof, or (2) which, in the opinion of the Port Authority, may constitute an extra-hazardous condition, so as to increase the risks normally attendant upon the operations contemplated by Section 3 hereof. The Lessee shall promptly observe, comply with and execute the provisions of any and all present and future rules and regulations, requirements, orders and directions of the Insurance Services Office of New Jersey, or of any other board or organization exercising or which may exercise similar functions, which may pertain or apply to the operations of the Lessee on the premises, and the Lessee shall, subject to and in accordance with the provisions of Section 6 hereof, make any and all structural and non-structural improvements, alterations or repairs of the premises that may be required at any time hereafter by any such present or future rule, regulation, requirement, order or direction. If by reason of any failure on the part of the Lessee to comply with the provisions of this paragraph any fire insurance rate, extended coverage or rental insurance rate on the premises or any part thereof, or on the Airport or any part thereof, shall at any time be higher than it would be if the premises were properly used for the purposes permitted by Section 3 hereof, then the Lessee shall pay to the Port Authority, as an item of additional rental, that part of all insurance premiums paid by the Port Authority which shall have been charged because of such violation or failure by the Lessee.

(e) The Lessee shall not dispose of nor permit any one to dispose of any waste material (whether liquid or solid) by means of toilets, manholes, sanitary sewers or storm sewers in the premises or on the Airport except after treatment in installations or equipment included in plans and specifications submitted to and approved by the Port Authority.

(f) Unless otherwise expressly permitted to do so, the Lessee shall not install, maintain or operate, or permit the installation, maintenance or operation on the premises of any vending-machine or device designed to dispense or sell food, beverages, tobacco, tobacco products or merchandise of any kind, whether or not included in the above categories, or of any restaurant, cafeteria, kitchen, stand or other establishment of any type for the preparation, or dispensing or sale of food, beverages, tobacco, tobacco products or merchandise of any kind, whether or not included in the above categories, or of any equipment or device for the furnishing to the public of service of any kind.

(g) The Port Authority by itself, or by contractors, lessees or permittees, shall have the exclusive right to install, maintain and receive the revenues from all coin-operated or other vending machines or devices installed by it and operated on the premises for the sale of merchandise of all types or for the rendering of services, provided, however, that no such machine or device shall be installed except upon the request of the Lessee. If the Port Authority does not install and maintain any such machine that the Lessee may request, the Lessee shall have the right to do so, provided, however, (1) that the Lessee shall pay or cause to be paid to the Port Authority each month for each machine upon the same basis for the preceding month as any

concessionaire, permittee or licensee of the Port Authority then operating machines at the Airport for the sale of similar merchandise or the rendering of similar services, and (2) that in the event the Lessee exercises such right the Port Authority, at any time thereafter, may substitute for the Lessee's machines other machines selling similar merchandise or services operated by the Port Authority or by its licensee, permittee or concessionaire, and thereupon the Lessee shall remove its machines.

(h) The Lessee shall not keep or store during any 24-hour period flammable liquids within any enclosed portion of the premises (other than in rooms or areas expressly constructed for the storage of such liquids) in excess of the Lessee's working requirements during the said 24-hour period. Any such liquids having a flash point of less than 110° Fahrenheit shall be kept and stored in safety containers of a type approved by the Underwriters Laboratories or the Factory Mutual Insurance Association.

(i) The Lessee shall not start or operate any engine or any item of automotive equipment in any enclosed space on the premises unless such space is adequately ventilated and unless such engine is equipped with a proper spark-arresting device which has been approved by the Port Authority.

(j) The Lessee shall not overload any floor and shall repair any floor, including supporting members, and any paved area damaged by overloading. Nothing in this paragraph (j) or elsewhere in this Agreement shall be or be construed to be a representation by the Port Authority of the weight any floor or paved area will bear.

(k) Except as provided in paragraph (h) hereof, the Lessee shall not keep or store in the premises, explosives, inflammable liquids or solids or oxidized materials or use any cleaning materials having a harmful corrosive effect, on any part of the premises.

(l) The Lessee shall not fuel or defuel any automotive vehicles or other equipment in the enclosed portions of the premises without prior approval of the General Manager of the Airport, provided, however, that the Lessee shall not be prohibited from using gasoline or other fuel in such enclosed portions where necessary in repairing or testing component parts, and in such event the Lessee shall take all precautions reasonably necessary to minimize the hazard created by such use.

(m) The Lessee shall not dispose of, release or discharge nor permit anyone to dispose of, release or discharge any Hazardous Substance on the premises or at the Airport. Any Hazardous Substance disposed of, released or discharged by the Lessee (or permitted by the Lessee to be disposed of, released or discharged) on the premises or at the Airport, shall upon notice by the Port Authority to the Lessee and subject to the provisions of Section 6 hereof, be completely removed and/or remediated by the Lessee. The obligations of the Lessee pursuant to this paragraph (m) shall survive the expiration or termination of this Agreement.

Section 12. Care, Maintenance, Rebuilding and Repair by the Lessee

(a) The Lessee shall repair, replace, rebuild and paint all or any part of the Airport which may be damaged or destroyed by the acts or omissions of the Lessee or by those of its employees, customers, guests or invitees or of other persons doing business with the Lessee.

(b) The Lessee shall, throughout the term of this Lease, assume the entire responsibility and shall relieve the Port Authority from all responsibility for all repair, rebuilding and maintenance whatsoever in the premises, whether such repair, rebuilding or maintenance be ordinary or extraordinary, partial or entire, inside or outside, foreseen or unforeseen, structural or otherwise, and without limiting the generality of the foregoing, the Lessee shall:

(1) Keep at all times in a clean and orderly condition and appearance, the premises and all the Lessee's fixtures, equipment and personal property which are located in any part of the premises which is open to or visible by the general public;

(2) Remove all snow and ice and perform all other activities and functions necessary or proper to make the premises available for use by the Lessee;

(3) Take good care of the premises and maintain the same at all times in good condition; perform all necessary preventive maintenance, including but not limited to painting (the exterior of the structures on the premises and areas visible to the general public to be painted only in colors which have been approved by the Port Authority); and make all repairs and replacements, and do all rebuilding, inside and outside, ordinary and extraordinary, structural or otherwise, which repairs, rebuilding and replacements by the Lessee shall be of good quality as to workmanship and material, and to pay promptly the cost and expense of such repairs, rebuilding replacements and maintenance.

(4) Without limiting its obligations elsewhere in this Section, the Lessee shall perform all decorating and painting (including redecorating and repainting) so that at all times the premises and all parts thereof are in first class appearance and condition;

(5) Provide and maintain all obstruction lights and similar devices, and provide and maintain all fire protection and safety equipment and all other equipment of every kind and nature required by any law, rule, ordinance, resolution or regulation of the type and nature described in Section 8 of this Agreement. The Lessee shall enter into and keep in effect throughout the term of the Lease a contract or contracts with a central station alarm company acceptable to the Port Authority to provide continuous and automatic surveillance of the fire protection system on the premises. The Lessee shall insure that all fire alarm signals with respect to the premises shall also be transmitted to the Airport's police emergency alarm board or to such other location on the Airport as the General Manager of the Airport may direct. The Lessee's obligations hereunder shall in no way create any obligation whatsoever on the part of the Port Authority;

(6) Take such anti-erosion measures and maintain the landscaping at all times in good condition, including but not limited to periodic planting, as the Port Authority may require, and perform and maintain such other landscaping with respect to all portions of the premises not paved or built upon as the Port Authority may require.

(7) Be responsible for the maintenance and repair of all service and utility lines, including but not limited to, service lines for the supply of water, compressed natural gas, electrical power and telephone conduits and lines, sanitary sewers and storm sewers located upon the premises or located adjacent to the premises and serving the premises leased to the Lessee or off the premises.

(8) Promptly wipe up all oil, gasoline, grease, lubricants and other flammable liquids or substances having a corrosive or detrimental effect on the paving or other surface of the premises, which may leak or be spilled thereon. Repair any damage to the paving or other surface of the premises caused by any oil, gasoline, grease, lubricants or other liquids and substances having a corrosive or detrimental effect thereon.

(9) From time to time and as often as reasonably required by the Port Authority, the Lessee shall conduct pressure, water flow, and other appropriate tests of the fire extinguishing system and apparatus which constitutes a part of the premises.

(c) In the event the Lessee fails to commence so to maintain, clean, repair, replace, rebuild or paint within a period of twenty (20) days after notice from the Port Authority so to do in the event that the said notice specifies that the required work to be accomplished by the Lessee includes maintenance and/or repair other than preventive maintenance; or within a period of one hundred eighty (180) days if the said notice specifies that the work to be accomplished by the Lessee involves preventive maintenance only, or fails diligently to continue to completion the repair, replacement, lamping and relamping, rebuilding or painting of all of the premises required to be repaired, replaced, rebuilt, restored or painted by the Lessee under the terms of this Agreement, the Port Authority may, at its option and in addition to any other remedies which may be available to it, clean, maintain, repair, replace, lamp or relamp, rebuild or paint or repaint or restore all or any part of the premises included in the said notice, and the cost thereof shall be payable to the Port Authority by the Lessee upon demand.

Section 13. **<u>Insurance</u>**

(a) The Lessee shall during the term of this Agreement, insure and keep insured to the extent of 100% of the replacement value thereof, all buildings, structures, improvements, installations, facilities and fixtures now or in the future located on the premises against such hazards and risks as may now or in the future be included under the Standard Form of Fire Insurance Policy of the State of New Jersey and also against damage or loss by windstorm, cyclone, tornado, hail, explosion, riot, civil commotion, aircraft, vehicles and smoke, under the Standard Form of Fire Insurance Policy of New Jersey and the form of extended coverage

endorsement prescribed as of the effective date of the said insurance by the Rating Organization having jurisdiction, and also covering nuclear property losses and contamination hazards and risks and boiler and machinery hazards and risks in a separate insurance policy or policies or as an additional coverage endorsement to the aforesaid policies in the form as may now or in the future be prescribed as of the effective date of said insurance by the Rating Organization having jurisdiction and/or the Superintendent of Insurance of the State of New Jersey and the Lessee shall furthermore provide additional insurance with respect to the premises covering any other property risk that the Port Authority may at any time during the term of this Agreement cover by carrier or self-insurance covered by appropriate reserves at other locations at the Airport upon written notice to the Lessee to such effect.

(b) The aforesaid insurance coverages and renewals thereof shall insure the Port Authority, the Lessee and the City of Newark, as their interests may appear, and shall provide that the loss, if any, shall be adjusted with and payable to the Port Authority.

(c) In the event the premises or any part thereof shall be damaged by any casualty against which insurance is carried pursuant to this Section 13, the Lessee shall promptly furnish to the Port Authority such information and data as may be necessary to enable the Port Authority to adjust the loss.

(d) The policies or certificates representing insurance covered by this Section 13 shall be delivered by the Lessee to the Port Authority upon execution of this Agreement by the Lessee and each policy or certificate delivered shall bear the endorsement of or be accompanied by evidence of payment of the premium thereon and, also, shall contain a valid provision obligating the insurance company to furnish the Port Authority and the City of New York ten (10) days' advance notice of the cancellation, termination, change or modification of the insurance evidenced by said policy or certificate. Renewal policies or certificates shall be delivered to the Port Authority at least ten (10) days before the expiration of the insurance which such policies are to renew.

(e) Regardless, however, of the persons whose interests are insured, the proceeds of all policies covered by this Section 13 shall be applied as provided in Section 14; and the word "insurance" and all other references to insurance in said Section 14 shall be construed to refer to the insurance which is the subject matter of this Section 13, and to refer to such insurance only.

(f) The insurance covered by this Section 13 shall be written by companies approved by the Port Authority. If at any time any of the insurance policies shall be or become unsatisfactory to the Port Authority as to form or substance or if any of the carriers issuing such policies shall be or become unsatisfactory to the Port Authority, the Lessee shall promptly obtain a new and satisfactory policy in replacement. If the Port Authority at any time so requests, a certified copy of each of said policies shall be delivered to the Port Authority.

Section 14. Damage to or Destruction of Premises

(a) Removal of Debris. If the premises, or any part thereof, shall be damaged by fire, the elements, the public enemy or other casualty, the Lessee shall promptly remove all debris resulting from such damage from the premises, and to the extent, if any; that the removal of debris under such circumstances is covered by insurance, the proceeds thereof shall be available to and be used by the Lessee for that purpose.

(b) Minor Damage. If the premises, or any part thereof shall be damaged by fire, the elements, the public enemy or other casualty but not rendered untenantable or unusable for a period of ninety (90) days, the premises shall be repaired with due diligence in accordance with the plans and specifications for the premises as they existed prior to such damage by and at the expense of the Lessee and if such damage is covered by insurance, the proceeds thereof shall be made available to and be used by the Lessee for that purpose.

(c) Major Damage to or Destruction of the Premises. If the premises, or any part thereof shall be destroyed or so damaged by fire, the elements, strikes, riots, civil commotion or other casualty as to be untenantable or unusable for ninety (90) days, or if within ninety (90) days after such damage or destruction the Lessee notifies the Port Authority in writing that in its opinion said premises will be untenantable or unusable for ninety (90) days then: The Lessee shall proceed with due diligence to make the necessary repairs or replacements to restore such premises in accordance with the plans and specifications for the premises as the same existed prior to such damage or destruction; or with the approval in writing of the Port Authority make such other repairs, replacements or changes as may be desired by the Lessee. If such destruction or damage was covered by insurance, the proceeds thereof shall be made available to and be used by the Lessee for such restoration.

(d) The obligation of the Lessee to repair or replace shall be limited to the amount of the insurance proceeds provided the Lessee has carried insurance to the extent and in accordance with Section 13 hereof. Any excess of the proceeds of insurance over costs of the restoration shall be retained by the Port Authority.

(e) The parties hereby stipulate that neither the provisions of Section 227 of the Real Property Law of New York nor those of any other similar statute shall extend or apply to this Agreement.

Section 15. Indemnity and Liability Insurance

(a) (1) The Lessee shall indemnify and hold harmless the Port Authority, its Commissioners, officers, employees and representatives, from and against (and shall reimburse the Port Authority for the Port Authority's costs and expenses including legal expenses incurred in connection with the defense of) all claims and demands third persons (including employees, officers and agents of the Port Authority including but not limited to claims and demands for

death or personal injuries, or for property damages, arising out of any default of the Lessee in performing or observing any term or provision of this Agreement, or out of the use or occupancy of the premises by the Lessee or by others, with its consent or out of any acts or omissions of the Lessee, its officers, employees, guests, representatives, customers, contractors, invitees, business visitors and other persons who are doing business with the Lessee or who are on the premises with the consent of the Lessee, or arising out of the acts or omissions of the Lessee, its officers and employees elsewhere at the Airport, including claims and demands of the City of Newark from which the Port Authority derives its rights in the Airport, for indemnification, arising by operation of law or through agreement of the Port Authority with the said City.

(2) If so directed, the Lessee shall at its own expense defend any suit based upon any such claim or demand (even if such claim or demand is groundless, false or fraudulent) and in handling such it shall not, without obtaining express advance permission from the General Counsel of the Port Authority, raise any defense involving in any way the jurisdiction of the tribunal, the immunity of the Port Authority, its Commissioners, officers, agents or employees, the governmental nature of the Port Authority, or the provisions of any statutes respecting suits against the Port Authority.

(b) In addition to the obligations set forth in paragraph (a) of this Section and all other insurance required under this Agreement, the Lessee prior to any use or occupancy of the premises (other than solely for purposes of the construction work) and thereafter during the term of this Agreement in its own name as insured and including the Port Authority and the City of Newark as additional insureds, shall maintain and pay the premiums during the term of this Agreement on a policy or policies of Comprehensive General Liability Insurance covering the Lessee's operations hereunder, including but not limited to Products Liability, premises-operations and completed operations, and covering bodily injury, including death and property damage liability, and Garage Liability (with automobile hazard 2 coverage), Garage Keepers Legal Liability, none of the foregoing to contain care, custody or control exclusions (endorsed to include all risks of physical loss and damage including lift collision coverage and collision and upset coverage in limits sufficient to cover vehicles and other property in the care, custody and control of the Lessee), and Comprehensive Automobile Liability Insurance covering owned, non-owned and hired vehicles, and including automatic coverage for newly-acquired vehicles, and all applicable requirements for underground storage tanks including the Federal Financial Responsibility Requirements in limits not less than $2,000,000 combined single limit per occurrence for bodily injury and property damage liability. Such policy or policies shall include Garage Liability (with automobile hazard two coverages, Garage Keepers Legal Liability in the comprehensive form to cover all risk, including, but not limited to (i) fire and explosion, (ii) theft of partial or entire vehicle, (iii) riot and/or vandalism, and (iv) coverage for collision or upset and Environmental Impairment Liability Insurance coverage covering the Lessee's legal liability, including clean up, in limits not less than $2,000,000 combined single limit per occurrence. The said policies of insurance shall also provide or contain a contractual liability endorsement covering the obligations assumed by the Lessee under paragraph (a) of this Section.

The Lessee shall also take out and maintain in its own name and at it own cost and expense:

(1) Comprehensive Automobile Liability Policy:

(aa) For bodily injury to or wrongful death of one person:	$2,000,000
(bb) For bodily injury to or wrongful death to more than one person in any one occurrence:	$2,000,000
(cc) Property Damage Liability	
For all damage arising out of injury to or destruction of property in any one occurrence:	$2,000,000

(2) Comprehensive Liability	Minimum Limit
(aa) Bodily Injury Liability	
For injury to or wrongful death to one person:	$2,000,000
For injury or wrongful death to more than one person in any one occurrence:	$2,000,000
(bb) Property Damage Liability For all damage arising out of injury to or destruction of property in any one occurrence:	$2,000,000
(cc) Products Liability/Completed Completed Operations:	$2,000,000

(3) Workers' Compensation Insurance

(4) Employers Liability Insurance in compliance with all applicable laws

Without limiting the provisions hereof, in the event the Lessee maintains the foregoing insurance in limits greater than aforesaid, the Port Authority shall be included therein as an additional insured to the full extent of all such insurance in accordance with all the terms and conditions hereof.

The said policy or policies or insurance shall also provide or contain an endorsement providing that the protections afforded the Lessee thereunder with respect to any claim or action against the Lessee by a third person shall pertain and apply with like effect with respect to any claim or action against the Lessee by the Port Authority, and shall also provide or contain an endorsement providing that the protections afforded the Port Authority hereunder and with respect to any claim or action against the Port Authority by the Lessee shall be the same as the protections afforded the Lessee thereunder with respect to any claim or action against the Lessee by a third person as if the Port Authority were the named insured thereunder, but such endorsement shall not limit, vary, change, or affect the protections afforded the Port Authority thereunder as an additional insured.

All insurance coverages and policies required under this Section may be reviewed by the Port Authority for adequacy of terms, conditions and limits of coverage at any time and from time to time during the term of the letting hereunder. The Port Authority may, at any such time, require additions, deletions, amendments or modifications to the above-scheduled insurance requirements, or may require such other and additional insurance, in such reasonable amounts, against such other insurable hazards, as the Port Authority may deem required and the Lessee shall promptly comply therewith.

(c) As to the insurance required by the provisions of this Section, a certified copy of each of the policies or a certificate or certificates evidencing the existence thereof, or binders, shall be delivered to the Port Authority upon execution of this Agreement by the Lessee. In the event any binder is delivered it shall be replaced within thirty (30) days by a certified copy of the policy or a certificate. Each such copy or certificate shall contain a valid provision or endorsement that the policy may not be cancelled, terminated, changed or modified without giving thirty (30) days' written advance notice thereof to the Port Authority. Each such copy or certificate shall contain an additional endorsement providing that the insurance carrier shall not, without obtaining express advance permission from the General Counsel of the Port Authority, raise any defense involving in any way the jurisdiction of the tribunal over the person of the Port Authority, the immunity of the Port Authority, its Commissioners officers, agents or employees, the governmental nature of the Port Authority or the provisions of any statutes respecting suits against the Port Authority. Any renewal policy shall be delivered to the Port Authority at least fifteen (15) days prior to the expiration of each expiring policy, except for any policy expiring after the date of expiration of the term of this Agreement. The aforesaid insurance shall be written by a company or companies approved by the Port Authority, the Port Authority agreeing not to withhold its approval unreasonably. If at any time any of the insurance policies shall be or become unsatisfactory to the Port Authority as to form or substance or if any of the carriers issuing such policies shall be or become unsatisfactory to the Port Authority, the Lessee shall promptly obtain a new and satisfactory policy in replacement. If the Port Authority at any time so requests, a certified copy of each of the policies shall be delivered to the Port Authority.

Section 16. **<u>Signs</u>**

(a) Except with the prior written approval of the Port Authority, the Lessee shall not erect, maintain or display any signs or any advertising at or on the exterior parts of the premises or in the premises so as to be visible from outside the premises or at or on any other

portion of the Airport outside the premises. Interior signs affecting public safety and security shall be in accordance with established Port Authority standards.

(b) Upon the expiration or termination of the letting, the Lessee shall remove, obliterate or paint out, as the Port Authority may direct, any and all signs and advertising on the premises or elsewhere on the Airport, and in connection therewith shall restore the portion of the premises and the Airport affected by such signs or advertising to the same condition as existing at the commencement of the letting. In the event of a failure on the part of the Lessee so to remove, obliterate or paint out each and every such sign or advertising and so to restore the premises and the Airport, the Port Authority may perform the necessary work and the Lessee shall pay the cost thereof to the Port Authority on demand.

Section 17. **Obstruction Lights**

The Lessee shall install, maintain and operate at its own expense such obstruction lights on the premises as the Federal Aviation Administration may direct or as the General Manager of the Airport may reasonably direct, and shall energize such lights daily for a period commencing thirty (30) minutes before sunset and ending thirty (30) minutes after sunrise (as sunset and sunrise may vary from day to day throughout the year) and for such other period as may be directed or requested by the Control Tower of the Airport.

Section 18. **Additional Rent and Charges**

(a) If the Port Authority has paid any sum or has incurred any obligation or expense which the Lessee has agreed to pay or reimburse the Port Authority for or if the Port Authority is required or elects to pay any sum or sums or incurs any obligations or expense by reason of the failure, neglect or refusal of the Lessee to perform or fulfill any one or more of the conditions, covenants or agreements contained in this Agreement or as a result of an act or omission of the Lessee contrary to the said conditions, covenants and agreements, the Lessee agrees to pay the sum or sums so paid or the expense so incurred, including all interest, costs, damages and penalties, and the same may be added to any installment of rent thereafter due hereunder, and each and every part of the same shall be and become additional rent, recoverable by the Port Authority in the same manner and with like remedies as if it were originally a part of the rent as set forth in Section 4 hereof.

(b) For all purposes under this Section and in any suit, action or proceeding of any kind between the parties hereto, any receipt showing payment of any sum or sums by the Port Authority for any work done or material furnished shall be prima facie evidence against the Lessee that the amount of such payment was necessary and reasonable. Should the Port Authority elect to use its operating and maintenance staff and/or its own materials in making any repairs, replacements, and/or alterations required of the Lessee under this Agreement and to charge the Lessee with the cost of same, any time report of any employee of the Port Authority

showing hours of labor or work allocated to any such repair, replacement and/or alteration, or any stock requisition of the Port Authority showing the issuance of materials for use in the performance thereof, shall likewise be prima facie evidence against the Lessee that the amount of such charge was necessary and reasonable.

Section 19. Rights of Entry Reserved

(a) The Port Authority, by its officers, employees, agents, representatives and contractors shall have the right at all reasonable times to enter upon the premises for the purpose of inspecting the same, for observing the performance by the Lessee of its obligations under this Agreement, and for the doing of any act or thing which the Port Authority may be obligated or have the right to do under this Agreement or otherwise.

(b) Without limiting the generality of the foregoing, the Port Authority, by its officers, employees, agents, representatives, and contractors, and by the employees, agents, representatives and contractors of any furnisher of utilities and other services, shall have the right, for its own benefit, for the benefit of the Lessee, or for the benefit of others than the Lessee at the Airport, to maintain existing and future utility, systems or portions thereof on the premises, including therein without limitation thereto, systems for the supply of heat, water, gas, fuel, electricity, and for the furnishing of fire-alarm, fire-protection, sprinkler, sewerage, drainage, telegraph and telephone service, including all lines, pipes, mains, wires, conduits and equipment connected with or appurtenant to such systems, and to enter upon the premises at all reasonable times to make such repairs, replacements or alterations as may, in the opinion of the Port Authority, be deemed necessary or advisable and, from time to time, to construct or install over, in or under the premises new systems or parts thereof, including lines, pipes, mains, wires, conduits and equipment, and to use the premises for access to other parts of the Airport otherwise not conveniently accessible, provided, however, that in the exercise of such rights of access, repair, alteration or new construction the Port Authority shall not unreasonably interfere with the use and occupancy of the premises by the Lessee.

(c) In the event that any property of the Lessee shall obstruct the access of the Port Authority, its employees, agents or contractors to any of the existing or future utility, mechanical, electrical or other systems and thus shall interfere with the inspection, maintenance or repair of any such system, the Lessee shall move such property, as directed by the Port Authority, in order that access may be had to the system or part thereof for its inspection, maintenance or repair, and, if the Lessee shall fail to so remove such property after direction from the Port Authority to do so, the Port Authority may move it and the Lessee hereby agrees to pay the cost of such moving upon demand.

(d) Nothing in this Section shall or shall be construed to impose upon the Port Authority any obligations so to construct or maintain or to make repairs, replacements, alterations or additions, or shall create any liability for any failure so to do. With respect to the premises, the Lessee is and shall be in exclusive control and possession thereof and the Port Authority shall not in any event be liable for any injury or damage to any property or to any person happening on or about said premises nor for any injury or damage to said premises nor to any property of the Lessee or for any other person located therein or thereon.

(e) At any time and from time to time during ordinary business hours within the six (6) months next preceding the expiration of the letting, the Port Authority, for and by its agents and employees, whether or not accompanied by prospective lessees, occupiers or users of the premises, shall have the right to enter thereon for the purpose of exhibiting and viewing all parts of the same, and during such six month period the Port Authority may place and maintain on the premises the usual "To Let" signs, which signs the Lessee shall permit to remain without molestation.

(f) If, during the last month of the letting, the Lessee shall have removed all or substantially all of its property from the premises, the Port Authority may immediately enter and alter, renovate and redecorate the premises.

(g) No abatement of rental shall be claimed by or allowed to the Lessee by reason of the exercise of any or all of the foregoing rights by the Port Authority or others.

Section 20. **Condemnation**

(a) Definitions:

As used in this Section, the phrase "temporary interest", when used with reference to real property, shall mean an interest in such real property entitling the owner of such interest to the possession of such property (whether or not such interest includes or is co-extensive with an interest of the Lessee therein under this Agreement), for an indefinite term or for a term terminable at will or at sufferance or for a term measured by a war or an emergency or other contingency or for a fixed term expiring prior to the expiration date of this Lease; and the phrase "permanent interest", when used with reference to real property, shall mean an interest in such real property entitling the owner of such interest to possession thereof, other than a temporary interest as above defined, including among others a fee simple and an interest for a term of years expiring on or after the expiration of this Agreement.

As used in this Section with reference to any premises leased to the Lessee for its exclusive use, the phrase "a material part" shall mean such a part of the said premises that the Lessee cannot continue to operate the premises for the purposes set forth or mentioned in Section 3 without using such part.

(b) Condemnation or Taking of a Permanent Interest in All or any Part of the premises.

Upon the acquisition by condemnation or the exercise of the power of eminent domain by anybody having a superior power of eminent domain of a permanent interest in all or any part of the premises (any such acquisition under this Section 20 being hereinafter referred to as a "taking"), the Port Authority shall purchase from the Lessee, and the Lessee shall sell to the Port Authority, the Lessee's leasehold interest (excluding any personal property whatsoever) in the premises, except that in the event of a taking of less than all of the said premises, the Port Authority shall purchase and the Lessee shall sell only so much of the Lessee's leasehold interest

in the premises as are taken. The sole and entire consideration to be paid by the Port Authority to the Lessee shall be an amount equal to the Unamortized Capital Investment (as defined in the Section of this Agreement entitled "Definitions"), if any, of the Lessee in the premises or, in the event of a permanent taking of less than all of the said premises, an amount equal to the Unamortized Capital Investment (as defined in the Section of this Agreement entitled "Definitions"), if any, of the Lessee in so much of the premises as are taken. However, the Port Authority shall purchase and the Lessee shall sell only if the consideration paid by the Port Authority therefor will constitute "unamortized Port Authority funds other than bond proceeds or Federal or State grants expended for capital improvements at the municipal air terminals", within the meaning of said phrase as used in Section 23, I, D of the Basic Lease or if an amount not less than such consideration can otherwise be retained by the Port Authority (and not be required to be paid to The City of Newark) out of the damages or award in respect to such taking without violation of any obligation of the Port Authority to The City of Newark under the Basic Lease. Such purchase and sale shall take effect as of the date upon which such body having superior power of eminent domain obtains possession of any such permanent interest in the premises and in that event, the Lessee (except with respect to its personal property), shall not have any claim or right to claim or be entitled to any portion of the amount which may be awarded as damages or paid as a result of such permanent taking, and all rights to damages, if any, of the Lessee (except for damages to its personal property) by reason thereof are hereby assigned to the Port Authority.

If, however, the amount to be paid by the Port Authority (the Unamortized Capital Investment as defined in the Section of this Agreement entitled "Definitions") if any, of the Lessee in the premises) for such leasehold interest will not constitute "unamortized Port Authority funds other than bond proceeds or Federal or State grants, expended for capital improvements at the municipal air terminals," within the meaning of said phrase as used in Section 23, I, D of the Basic Lease or if an amount not less than such consideration cannot otherwise be retained by the Port Authority (and not be required to be paid to the City of Newark) out of the damages or award in respect to such taking without violation of any obligation of the Port Authority to The City of New York under the Basic Lease, then the aforesaid agreement to purchase and sell said leasehold interest shall be null and void; and in any such event, the Lessee shall have the right to appear and file its claim for damages in the condemnation or eminent domain proceedings, to participate in any and all hearings, trials and appeals therein, and to receive such amount as it may lawfully be entitled to receive as damages or payment as a result of such taking, because of its leasehold interest in the premises up to but not in excess of an amount equal to the Unamortized Capital Investment (as defined the Section of this Agreement entitled "Definitions"), if any, of the Lessee in the premises. The Port Authority and the Lessee hereby agree that as full and final settlement of any sum that may be due as rent or otherwise for the balance of the term of this Lease, the Lessee will pay to the Port Authority the excess, if any, which the Lessee may be entitled to receive over the foregoing sum. If there be no excess, any sum that may be due as rent or otherwise for the balance of the term of this Lease shall abate.

In the event of the taking of all of the premises and if the Lessee has no Unamortized Capital Investment (as defined the Section of this Agreement entitled "Definitions") in the premises at the time of the taking, then the aforesaid agreement to purchase and sell said leasehold interest shall be null and void; and in that event, this Lease and all rights

granted by this Lease to the Lessee to use or occupy the premises for its exclusive use or for its use in common with others at the Airport and all rights, privileges, duties and obligations of the parties in connection therewith or arising thereunder shall terminate as of the date of the taking, and in that event, the Lessee (except with respect to its personal property) shall not have any claim or right to claim or be entitled to any portion of the amount which may be awarded as damages or paid as a result of such taking, and all rights to damages, if any, of the Lessee (except for damages to its personal property) by reason thereof are hereby assigned to the Port Authority.

In the event that the taking covers only a material part of the premises, then the Lessee and the Port Authority shall each have an option exercisable by notice given within ten (10) days after the effective date of such taking to terminate the letting hereunder with respect to the premises not taken, as of the date of such taking and such termination shall be effective as if the date of such taking were the original date of expiration hereof. If the Port Authority exercises this option, it shall purchase from the Lessee the Lessee's leasehold interest (excluding any personal property whatsoever) in the premises not taken for a consideration equal to the Unamortized Capital Investment (as defined the Section of this Agreement entitled "Definitions"), if any, of the Lessee in the premises not taken. If the letting of the entire premises is not terminated the settlement or abatement of rentals after the date possession is taken by the body having a superior power of eminent domain shall be in accordance with Section 4 hereof.

(c) Condemnation or Taking of a Temporary Interest in All or Any Part of the Premises.

Upon acquisition by condemnation or the exercise of the power of eminent domain by a body having a superior power of eminent domain of a temporary interest in all or any part of the premises, there shall be no abatement of any rental payable by the Lessee to the Port Authority under the provisions of this Agreement but the Lessee shall have the right to claim and in the event of an award therefor shall be entitled to retain the amount which may be awarded as damages or paid as a result of the condemnation or other taking of such temporary interest, provided, that the Lessee shall be obligated to pay over to the Port Authority all such payments as may be made to the Lessee as damages or in satisfaction of such claim, after deduction of (i) reasonable expenses incurred by the Lessee in the prosecution of such claim; (ii) an amount equal to the Unamortized Capital Investment (as defined the Section of this Agreement entitled "Definitions"), if any, of the Lessee in the premises or in the event of a taking of less than all of the said premises, an amount equal to such Unamortized Capital Investment in the premises as are taken, to the extent in either case that the same is to be amortized over the period of the taking; and (iii) the then present capitalized value of the Lessee's obligation for rentals thereafter payable during the period of the taking in respect to the demised premises, or, in the event of a taking of less than all of the said premises, in respect to the premises so taken.

In the event that the taking covers a material part but less than all of the demised premises, then the Lessee and the Port Authority shall each have an option, exercisable by notice given within ten (10) days after the effective date of such taking to suspend the term of the letting of such of the premises as are not so taken during the period of the taking, and, in that event, the rentals for such premises shall abate for the period of the suspension. If the Port

Authority exercises this option, it shall purchase from the Lessee the Lessee's leasehold interest (excluding any personal property whatsoever) in the premises not taken for the period of suspension for a consideration equal to the Unamortized Capital Investment (as defined in the Section of this Agreement entitled "Definitions"), if any, of the Lessee in such premises which is to be amortized over the period of such suspension.

Section 21. **Assignment and Sublease**

(a) The Lessee covenants and agrees that it will not sell, convey, transfer, mortgage, pledge or assign this Agreement or the letting or any part thereof, without the prior written consent of the Port Authority.

(b) The Lessee shall not sublet the premises or any part thereof, without the prior written consent of the Port Authority.

(c) If the Lessee assigns, sells, conveys, transfers, mortgages, pledges or sublets in violation of paragraphs (a) or (b) of this Section or if the premises are occupied by anybody other than the Lessee, the Port Authority may collect rent from any assignee, sublessee or anyone who claims a right under this Agreement or letting or who occupies the premises, and the Port Authority shall apply the net amount collected to the rental herein reserved; but no such collection shall be deemed a waiver by the Port Authority of the covenants contained in paragraphs (a) and (b) of this Section nor any acceptance by the Port Authority of any such assignee, sublessee, claimant or occupant as Lessee, nor a release of the Lessee by the Port Authority from the further performance by the Lessee of the covenants contained herein.

(d) The Lessee shall not use or permit any person to use the premises or any portion thereof for any purpose other than the purposes stated in Section 4 hereof.

Section 22. **Termination**

(a) If any one or more of the following events shall occur, that is to say:

(1) The Lessee shall become insolvent or shall take the benefit of any present or future insolvency statute, or shall make a general assignment for the benefit of creditors, or file a voluntary petition in bankruptcy or a petition or answer seeking an arrangement or its reorganization or the readjustment of its indebtedness under the federal bankruptcy laws or under any other law or statute of the United States or of any state thereof, or consent to the appointment of a receiver, trustee, or liquidator of all or substantially all of its property; or

(2) By order or decree of a court the Lessee shall be adjudged bankrupt or an order shall be made approving a petition filed by any of its creditors or, if the Lessee is a corporation, by any of the stockholders of the Lessee, seeking its

reorganization or the readjustment of its indebtedness under the federal bankruptcy laws or under any law or statute of the United States or of any state thereof; or

(3) A petition under any part of the federal bankruptcy laws or an action under any present or future insolvency law or statute shall be filed against the Lessee and shall not be dismissed within thirty (30) days after the filing thereof; or

(4) The letting hereunder or the interest or estate of the Lessee under this Agreement shall be transferred to, pass to or devolve upon, by operation of law or otherwise, any other person, firm or corporation; or

(5) The Lessee, if a corporation, shall, without the prior written approval of the Port Authority, become a possessor or merged corporation in a merger, a constituent corporation in a consolidation, or a corporation in dissolution; or

(6) By or pursuant to, or under authority of any legislative act, resolution or rule, or any order or decree of any court or governmental board, agency or officer having jurisdiction, a receiver, trustee, or liquidator shall take possession or control of all or substantially all of the property of the Lessee, and such possession or control shall continue in effect for a period of thirty (30) days; or

(7) The Lessee shall voluntarily abandon, desert or vacate the premises or discontinue its operations at the Airport; or after exhausting or abandoning any right of further appeal, the Lessee shall be prevented for a period of thirty (30) days by action of any governmental agency other than the Port Authority having any jurisdiction thereof, from conducting its operations at the Airport, regardless of the fault of the Lessee; or

(8) Any lien is filed against the premises because of any act or omission of the Lessee and shall not be discharged or fully bonded within thirty (30) days; or

(9) The Lessee shall fail duly and punctually to pay the rentals or to make any other payment required hereunder when due to the Port Authority; or

(10) The Lessee shall fail to keep, perform and observe each and every other promise, covenant and agreement set forth in this Agreement on its part to be kept, performed, or observed, within ten (10) days after receipt of notice of default thereunder from the Port Authority (except where fulfillment of its obligation requires activity over a period of time, and the Lessee shall have commenced to perform whatever may be required for fulfillment within ten (10) days after receipt of notice and continues such performance without interruption except for causes beyond its control);

(11) Any type of strike or other labor activity is directed against the operations of the Lessee at the Airport resulting in picketing or boycott for a period of at least forty-eight (48) hours which, in the opinion of the Port Authority, adversely affects or is likely adversely to affect the operation of the Airport or the operations of other

lessees or licensees thereat, whether or not the same is due to the fault of the Lessee, and whether caused by the employees of the Lessee or by others;

then upon the occurrence of any such event or at any time thereafter during the continuance thereof, the Port Authority may upon five (5) days' notice terminate the letting and the rights of the Lessee hereunder, such termination to be effective upon the date specified in such notice. Such right of termination and the exercise thereof shall be and operate as a conditional limitation.

(b) If any of the events enumerated in paragraph (a) of this Section shall occur prior to the letting, the Lessee shall not be entitled to enter into possession of the premises and the Port Authority upon the occurrence of any such event or at any time thereafter during the continuance thereof by twenty-four (24) hours' notice may cancel the interest of the Lessee under this Agreement, such cancellation to be effective upon the date specified in such notice.

(c) No acceptance by the Port Authority of rentals, fees, charges or other payments in whole or in part for any period or periods after a default of any of the terms, covenants and conditions hereof to be performed, kept or observed by the Lessee shall be deemed a waiver of any right on the part of the Port Authority to terminate the letting.

(d) No waiver by the Port Authority of any default on the part of the Lessee in performance of any of the terms, covenants or conditions hereof to be performed, kept or observed by the Lessee shall be or be construed to be a waiver by the Port Authority of any other or subsequent default in performance of any of the said terms, covenants and conditions.

(e) The rights of termination described above shall be in addition to any other rights of termination provided in this Agreement and in addition to any rights and remedies that the Port Authority would have at law or in equity consequent upon any breach of this Agreement by the Lessee, and the exercise by the Port Authority of any right of termination shall be without prejudice to any other such rights and remedies.

Section 23. **Right of Re-entry**

The Port Authority shall, as an additional remedy upon the giving of a notice of termination as provided in Section 22 hereof, have the right to re-enter the premises and every part thereof upon the effective date of termination without further notice of any kind, and may regain and resume possession either with or without the institution of summary or any other legal proceedings or otherwise. Such re-entry, or regaining or resumption of possession, however, shall not in any manner affect, alter or diminish any of the obligations of the Lessee under this Agreement, and shall in no event constitute an acceptance of surrender.

Section 24. **Waiver of Redemption**

The Lessee hereby waives any and all rights to recover or regain possession of the premises and all rights of redemption, granted by or under any present or future law arising in the

event it is evicted or dispossessed for any cause, or in the event the Port Authority obtains possession of the premises in any lawful manner.

Section 25. **Survival of the Obligations of the Lessee**

(a) In the event that the letting shall have been terminated in accordance with a notice of termination as provided in Section 22 hereof, or the interest of the Lessee cancelled pursuant thereto, or in the event that the Port Authority has re-entered, regained or resumed possession of the premises in accordance with the provisions of Section 23 hereof, all the obligations of the Lessee under this Agreement shall survive such termination or cancellation, or re-entry, regaining or resumption of possession and shall remain in full force and effect for the full term of the letting under this Agreement, and the amount or amounts of damages or deficiency shall become due and payable to the Port Authority to the same extent, at the same time or times and in the same manner as if no termination, cancellation, re-entry, regaining or resumption of possession had taken place. The Port Authority may maintain separate actions each month to recover the damage or deficiency then due or at its option and at any time may sue to recover the full deficiency less the proper discount, for the entire unexpired term.

(b) The amount of damages for the period of time subsequent to termination or cancellation (or re-entry, regaining or resumption of possession) on account of the Lessee's rental obligations, shall be the sum of the following:

(1) On account of the Lessee' basic rental obligation, the amount of the total of all annual basic rentals, less the installments thereof payable prior to the effective date of termination except that the credit to be allowed for the installment payable on the first day of the month in which the termination is effective shall be prorated for the part of the month the letting remains in effect, on the basis of a 30-day month;

(2) An amount equal to the percentage stated in paragraph (2)(a) of Subdivision A of Section 4 applied to the gross receipts of the Lessee, which gross receipts would have been received by the Lessee during the balance of the term if there had been no termination or cancellation (or re-entry, regaining, or resumption or possession); and for the purpose of calculation hereunder (i) the said amount of gross receipts shall be derived by multiplying the number of days in the balance of the term originally fixed by the daily average of the Lessee's gross receipts; (ii) the daily average of the Lessee's gross receipts shall be the Lessee's total actual gross receipts during that part of the effective period of the letting (in all monthly periods falling within the effective period) during which the premises were open and in operation and in which no abatement was in effect divided by the number of days included in such part of the effective period; (iii) the said amount of gallons of gasoline, motor oil, diesel fuel and alternative fuel shall be respectively derived by multiplying the number of days in the balance of the term originally fixed by the respective daily averages of the Lessee's sales and deliveries of gasoline, motor oil, diesel fuel and alternative fuel; and (iv) the daily averages of the Lessee's sales and deliveries of gasoline, motor oil, diesel fuel and

alternative fuel shall be the total actual amount of gasoline, motor oil, diesel fuel and alternative fuel of each type sold or delivered by the Lessee during that part of the effective period of the letting during which the premises were open and in operation and in which no abatement was in effect divided by the number of days included in such part of the effective period; and

(3) An amount equal to all expenses incurred by the Port Authority in connection with regaining possession and restoring and reletting the demised premises, for legal expenses, (including but not limited to the cost to the Port Authority of in-house legal services), putting the premises in order including without limitation, cleaning, decorating and restoring (on failure of the Lessee to restore), maintenance and brokerage fees.

(4) It is understood and agreed that the statement of damages under the preceding paragraph (b) shall not affect or be construed to affect the Port Authority's right to damages in the event of termination or cancellation (or re-entry, regaining or resumption of possession) where the Lessee has not received any actual gross receipts under this Agreement.

(c) In addition to and without limiting the foregoing or any other right, claim or remedy of the Port Authority, in the event this Lease shall be terminated pursuant to Section 22 hereof and the Lessee shall not have completed the construction work or any portion thereof within the time period specified in Section 6 hereof, the Lessee shall and hereby agrees to pay to the Port Authority any and all amounts, costs or expenses, of any type whatsoever, paid or incurred by the Port Authority by reason by reason of the failure of the Lessee so to complete the construction work, or any portion thereof, including all interest costs, damages, losses, and penalties, and all of the same shall be deemed treated as survived damages hereunder.

(d) Notwithstanding anything to the contrary herein contained, all of the obligations of the Lessee under this Lease with respect to Environmental Damages and Environmental Requirements shall survive the expiration or termination of this Agreement.

Section 26. **<u>Reletting by the Port Authority</u>**

The Port Authority upon termination or cancellation pursuant to Section 22 hereof, or upon any re-entry, regaining or resumption of possession pursuant to Section 23 hereof, may occupy the premises or may relet the premises, and shall have the right to permit any person, firm or corporation to enter upon the premises and use the same. Such reletting may be of part only of the premises or a part thereof together with other space, and for a period of time the same as or different from the balance of the term hereunder remaining, and on the terms and conditions the same as or different from those set forth in this Agreement. The Port Authority shall also, upon termination or cancellation pursuant to the said Section 22, or upon its re-entry, regaining or resumption of possession pursuant to the said Section 23, have the right to repair or to make structural or other changes in the premises, including changes which alter the character of the premises and the suitability thereof for the purposes of the Lessee under this Agreement,

without affecting; altering or diminishing the obligations of the Lessee hereunder. In the event either of any reletting or of any actual use and occupancy by the Port Authority (the mere right of the Port Authority to use and occupy not being sufficient however) there shall be credited to the account of the Lessee against its survived obligations hereunder any net amount remaining after deducting from the amount actually received from any lessee, licensee, permittee or other occupier in connection with the use of the said premises or portion thereof during the balance of the letting as the same is originally stated in this Agreement, or from the market value of the occupancy of such portion of the premises as the Port Authority may during such period actually use and occupy, all expenses, costs and disbursements incurred or paid by the Port Authority in connection therewith. No such reletting shall be or be construed to be an acceptance of a surrender.

Section 27. **Remedies to be Non-Exclusive**

All remedies provided in this Agreement shall be deemed cumulative and additional and not in lieu of or exclusive of each other or of any other remedy available to the Port Authority at law or in equity, and the exercise of any remedy, or the existence herein of other remedies or indemnities shall not prevent the exercise of any other remedy.

Section 28. **Surrender**

The Lessee covenants and agrees to yield and deliver peaceably to the Port Authority possession of the premises on the date of cessation of the letting, whether such cessation be by termination, expiration or otherwise, promptly and in good condition, except for reasonable wear and tear which does not cause or tend to cause deterioration of the premises or adversely affect the efficient or proper utilization thereof, and all of the premises shall be free and clear of all liens, encumbrances, and security interests of any type whatsoever.

Section 29. **Acceptance of Surrender of Lease**

No Agreement of surrender or to accept a surrender shall be valid unless and until the same shall have been reduced to writing and signed by the duly authorized representatives of the Port Authority and of the Lessee. Except as expressly provided in this Section, neither the doing of, nor any omission to do, any act or thing, by any of the officers, agents or employees of the Port Authority, shall be deemed an acceptance of a surrender of the letting or of this Agreement.

Section 30. **Effect of Basic Lease**

(a) Notwithstanding any other term, provision, covenant or condition of this Agreement, this Agreement and the letting hereunder shall, in any event, terminate with the termination or expiration of the Basic Lease with the City of Newark which covers the premises, such termination to be effective on such date and to have the same effect as if the term of the letting had on that date expired. The rights of the Port Authority in the premises are those

granted to it by the Basic Lease, and no greater rights are granted or intended to be granted to the Lessee than the Port Authority has power thereunder to grant.

(b) The Port Authority covenants that, during the term of this Agreement, the Port Authority will not take any action which would amount to or have the effect of cancelling, surrendering or terminating the Basic Lease prior to the date specified in the Basic Lease for its expiration insofar as such surrender, cancellation or termination would in any manner deprive the Lessee of any of its rights, licenses or privileges under this Agreement.

(c) Nothing herein contained shall prevent the Port Authority from entering into an agreement with the City of Newark pursuant to which the Basic Lease is surrendered, cancelled or terminated *provided* that the City of Newark, at the time of such agreement, assumes the obligations of the Port Authority under this Agreement.

(d) Nothing contained in this Agreement shall be deemed a waiver by the Lessee of any of its rights, licenses or privileges under this Agreement in the event that the Basic Lease should be surrendered, cancelled or terminated prior to the date specified in the Basic Lease for its expiration.

Section 31. **Removal of Property**

The Lessee shall have the right at any time during the letting to remove its equipment, inventories, removable fixtures and other personal property from the premises. If the Lessee shall fail to remove its property on or before the termination or expiration of the letting, the Port Authority may remove such property to a public warehouse for deposit or retain the same in its own possession, and sell the same at public auction, the proceeds of which shall be applied first to the expenses of removal, storage and sale; second to any sums owed by the Lessee to the Port Authority, with any balance remaining to be paid to the Lessee; if the expenses of such removal, storage and sale shall exceed the proceeds of sale, the Lessee shall pay such excess to the Port Authority upon demand.

Section 32. **Brokerage**

The Lessee represents and warrants that no broker has been concerned on its behalf in the negotiation of this Agreement and that there is no broker who is or may be entitled to be paid a commission in connection therewith. The Lessee shall indemnify and save harmless the Port Authority of and from any claim for commission or brokerage made by any and all persons, firms or corporations whatsoever for services rendered to the Lessee in connection with the negotiation and execution of this Agreement.

Section 33. **Limitation of Rights and Privileges Granted**

(a) No greater rights or privileges with respect to the use of the premises or any part thereof are granted or intended to be granted to the Lessee by this Agreement, or by any provision thereof, than the rights and privileges expressly and specifically granted hereby.

(b) The premises are let to the Lessee and the Lessee takes the same subject to all the following: (i) easements, restrictions, reservations, covenants and agreements, if any, to which the premises may be subject, rights of the public in and to any public street, (ii) rights, if any, of any enterprise, public or private which is engaged in furnishing heating, lighting, power, telegraph, telephone, steam, or transportation services and of the City of Newark and State of New Jersey; (iii) permits, licenses, regulations and restrictions, if any, of the United States, the City of Newark or State of New Jersey or other governmental authority.

Section 34. **Notices**

Except where expressly required or permitted herein to be oral, all notices, directions, requests, consents and approvals required to be given to or by either party shall be in writing, and all such notices and requests shall be personally delivered to the duly designated officer or representative of such party or delivered to the office of such officer or representative during regular business hours, or forwarded to him or to the party at such address by registered or certified mail. The Lessee shall designate an office within the Port of New York District and an officer or representative whose regular place of business is at such office. Until further notice, the Port Authority hereby designates its Executive Director, and the Lessee designates the person named on the first page hereof as their officers or representatives upon whom notices and requests may be served, and the Port Authority designates its office at 225 Park Avenue South, New York, New York 10003, and the Lessee designates its office at 366 North Broadway, Suite 206, Jericho, New York 11753 as their respective offices where notices and requests may be served. If mailed, the notices herein required to be served shall be deemed effective and served as of the date of the registered or certified mailing thereof.

Section 35. **Other Construction by the Lessee**

Except as expressly provided herein, the Lessee shall not erect any structures, make any improvements or do any other construction work on the premises or elsewhere on the Airport, or alter, modify or make additions or improvements or repairs to or replacements of any structure now existing or built at any time during the letting, or install or remove any fixtures (other than trade fixtures, removable without material damage to the freehold, any such damage to be immediately repaired by the Lessee) without the prior written approval of the Port Authority and in the event any construction, improvement, alteration, modification or addition, repair or replacement is made without such approval, then upon reasonable notice so to do, the Lessee will remove the same, or at the option of the Port Authority cause the same to be changed to the satisfaction of the Port Authority. In case of any failure on the part of the Lessee to comply with such notice, the Port Authority may effect the removal or change and the Lessee shall pay the cost thereof to the Port Authority.

Section 36. **Place of Payments**

All payments required of the Lessee by this Agreement shall be made by mail to The Port Authority of New York and New Jersey, P.O. Box 95000-1517, Philadelphia, Pennsylvania 19195-1517, or to such other office or address as may be substituted therefor.

Section 37. **Additional Construction Work**

(a) Without in anyway limiting the provisions of Section 6, the Lessee shall perform the work necessary to construct and install a dual bay car wash (one automated; one full service) and the alternative fuel component of the multi-fuel vehicle service station, all of the aforesaid construction work hereinafter being referred to as the "Additional Work". Promptly after execution of this Agreement, and strictly in accordance with the provisions of Section 6 hereof, the Lessee shall submit to the Port Authority for its approval a Construction Application in the form supplied by the Port Authority setting forth in detail and by appropriate plans and specifications the construction and installation work the Lessee proposes to perform to install and construct the dual bay car wash (one automated; one full service) and alternative fuel component. The Lessee hereby represents that upon the completion of the said Additional Work, the dual bay car wash (one automated; one full service and the alternative fuel component will be suitable for its operations hereunder. The Lessee shall do all preventive maintenance and make all repairs, replacements and rebuilding necessary to keep the same in the condition it was in when made or installed except for reasonable wear and tear. The Lessee shall operate the dual bay car wash (one automated; one full service) and alternative fuel component in accordance with all of the terms, covenants and provisions contained in this Agreement and shall comply with all applicable governmental laws, ordinances, enactments, resolutions, rules, regulations and orders in connection therewith. The Port Authority shall have no obligations or liabilities in connection with the operation or maintenance of the dual bay car wash (one automated; one full service) and alternative fuel component by the Lessee.

(b) Title to the Additional Work shall vest in the Port Authority when the same is installed in the premises and the Lessee shall execute such necessary documents confirming the same as the Port Authority may require.

Section 38. **Construction and Application of Terms**

(a) The Section and paragraph headings, if any in this Agreement, are inserted *only as a matter of convenience and for reference and in no way define, limit or describe the* scope or intent of any provision hereof.

(b) Unless otherwise expressly specified, the terms, provisions and obligations contained in the Exhibit(s) attached hereto, whether there set out in full or as amendments of, or supplements to provisions elsewhere in the Agreement stated, shall have the same force and effect as if herein set forth in full.

(c) If any clause, provision or section of this Agreement shall be ruled invalid by any court of competent jurisdiction, the invalidity of such clause, provision or section or sections shall not affect any of the remaining clauses, provisions or sections hereof.

Section 39. Non-liability of Individuals

Neither the Commissioners of the Port Authority nor any of them, nor any officer, agent or employee thereof, shall be charged personally by the Lessee with any liability or held liable to it under any term or provision of this Agreement or of any supplement, modification or amendment to this Agreement or because of its execution or attempted execution, or because of any breach or alleged breach thereof.

Section 40. Non-Discrimination

(a) Without limiting the generality of any of the provisions of the Agreement, the Lessee, for itself, its successors in interest, and assigns, as a part of the consideration hereof, does hereby covenant and agree as a covenant running with the land that (1) no person on the grounds of race, creed, color, sex or national origin shall be excluded from participation in, denied the benefits of, or be otherwise subjected to discrimination in the use of the premises, (2) that in the construction of any improvements, on, over, or under the premises and the furnishing of services thereon by it, no person on the ground of race, creed, sex, color, or national origin shall be excluded from participation in, denied the benefits of, or otherwise be subjected to discrimination, (3) that the Lessee shall use the premises in compliance with all other requirements imposed by or pursuant to Title 49, Code of Federal Regulations, Department of Transportation, Subtitle A, Office of the Secretary, Part 21, Nondiscrimination in Federally-assisted programs of the Department of Transportation-Effectuation of Title VI of the Civil Rights Act of 1964, and as said Regulations may be amended, and any other present or future laws, rules, regulations, orders or directions of the United States of America with respect thereto which from time to time may be applicable to the Lessee's operations at the Airport, whether by reason of agreement between the Port Authority and the United States Government or otherwise.

(b) The Lessee shall include the provisions of paragraph (a) of this Section in every agreement or concession it may make pursuant to which any person or persons, other than the Lessee, operates any facility at the Airport providing services to the public and shall also include therein a provision granting the Port Authority a right to take such action as the United States may direct to enforce such covenant.

(c) The Lessee's non-compliance with the provisions of this Section shall constitute a material breach of this Agreement. In the event of the breach by the Lessee of any of the above non-discrimination provisions the Port Authority may take any appropriate action to enforce compliance; or in the event such non-compliance shall continue for a period of twenty (20) days after receipt of written notice from the Port Authority, the Port Authority shall have the right to terminate the Agreement and the letting hereunder with the same force and effect as a

termination under the Section of this Agreement providing for termination for default by the Lessee in the performance or observance of any other term or provision of this Agreement, or may pursue such other remedies as may be provided by law; and as to any or all of the foregoing, the Port Authority may take such action as the United States may direct.

(d) The Lessee shall indemnify and hold harmless the Port Authority from any claims and demands of third persons including the United States of America resulting from the Lessee's non-compliance with any of the provisions of this Section and the Lessee shall reimburse the Port Authority for any loss or expense incurred by reason of such non-compliance.

(e) Nothing contained in this Section shall grant or shall be deemed to grant to the Lessee the right to transfer or assign this Agreement, to make any agreement or concession of the type mentioned in paragraph (b) hereof, or any right to perform any construction on the premises.

Section 41. Affirmative Action

The Lessee assures that it has and will continue to undertake an affirmative action program as required by 14 CFR Part 152, Subpart E, to insure that no person on the grounds of race, creed, color, national origin, or sex be excluded from participating in any employment activities covered in 14 CFR Part 152, Subpart E. The Lessee assures that no person shall be excluded on these grounds from participating in or receiving the services or benefits of any program or activity covered by this subpart. The Lessee assures that it will require that its covered suborganizations provide assurances to the Lessee that they similarly will undertake affirmative action programs and that they will require assurances from their suborganizations, as required by 14 CFR Part 152, Subpart E, to the same effect.

Section 42. The Lessee's Additional Ongoing Affirmative Action - Equal Opportunity Commitment

(a) In addition to and without limiting any other term or provision of this Agreement, the Lessee, in connection with its use and occupancy of the premises and any and all of its activities and operations at or affecting the premises or the Airport, shall not discriminate against employees or applicants for employment because of race, creed, color, national origin, sex, age, disability or marital status, and shall undertake or continue existing programs of affirmative action to ensure that minority group persons and women are afforded equal employment opportunity without discrimination. Such programs shall include, but not be limited to, recruitment, employment, job assignment, promotion, upgrading, demotion, transfer, layoff, termination, rates of pay or other forms of compensation, and selections for training or retraining, including apprenticeship and on-the-job training.

(b) In addition to and without limiting the foregoing, and without limiting the provisions of Sections 6 (c), 40 and 41 and Schedule E hereof, it is hereby agreed that the Lessee in connection with its continuing operation, maintenance and repair of the premises, or any

portion thereof, as provided in this Agreement, and in connection with every award or agreement for concessions or consumer services at the Airport, shall throughout the term of the letting hereunder commit itself to and use good faith efforts to implement an extensive program of affirmative action, including specific affirmative action steps to be taken by the Lessee, to ensure maximum opportunities for employment and contracting by minorities and women, and by Minority Business Enterprises and Women-owned Business Enterprises. In meeting the said commitment the Lessee agrees to submit to the Port Authority for its review and approval the Lessee's said extensive affirmative action program, including the specific affirmative action steps to be taken by the Lessee to meet its aforesaid commitment, within one hundred eighty (180) days after the execution of this Agreement. The Lessee shall incorporate in its said program such revisions and changes which the Port Authority initially or from time to time may reasonably require. The Lessee throughout the term of the letting hereunder shall document its efforts in implementing the said program, shall keep the Port Authority fully advised of the Lessee's progress in implementing the said program and shall supply to the Port Authority such information, data and documentation with respect thereto as the Port Authority may from time to time and at any time request, including but not limited to annual reports.

(c) (1) "Minority" as used herein shall have the meaning as defined in Paragraph 11(c) of Part I of Schedule E.

(2) "Minority Business Enterprise" (MBE) as used herein shall have the meaning as defined in the first paragraph of Part II of Schedule E.

(3) "Women-owned Business Enterprise" (WBE) as used herein shall have the meaning as defined in the first paragraph of Part II of Schedule E.

(4) Good faith efforts to include meaningful participation by MBEs and WBEs shall include at least the following:

(i) Dividing the work to be subcontracted into smaller portions where feasible.

(ii) Actively and affirmatively soliciting bids for subcontracts from MBEs and WBEs, including circulation of solicitations to minority and female contractor associations. The Lessee shall maintain records detailing the efforts made to provide for meaningful MBE and WBE participation as called for in paragraph (b) above, including the names and addresses of all MBEs and WBEs contacted and, if any such MBE or WBE is not selected as a joint venturer or subcontractor, the reason for such decision.

(iii) Making plans and specifications for prospective work available to MBEs and WBEs in sufficient time for review.

(iv) Utilizing the list of eligible MBEs and WBEs maintained by the Port Authority or seeking minorities and women from other sources for the purpose of soliciting bids for subcontractors.

(v) Encouraging the formation of joint ventures, partnerships or other similar arrangements among subcontractors, where appropriate, to insure that the Lessee will meet its obligations hereunder.

(vi) Insuring that provision is made to provide progress payments to MBEs and WBEs on a timely basis.

(vii) Submitting quarterly reports to the Port Authority (Office of Business and Job Opportunity) detailing its compliance with the provisions hereof.

(d) The Lessee's non-compliance with the provisions of this Section shall constitute a material breach of this Agreement. In the event of the breach by the Lessee of any of the above provisions the Port Authority may take any appropriate action to enforce compliance; or in the event such non-compliance shall continue for a period of twenty (20) days after receipt of written notice from the Port Authority, the Port Authority shall have the right to terminate this Agreement and the letting hereunder with the same force and effect as a termination under the Section of this Agreement providing for termination for default by the Lessee in the performance or observance of any other term or provision of this Agreement, or may pursue such other remedies as may be provided by law.

(e) In the implementation of this Section, the Port Authority may consider compliance by the Lessee with the provisions of any federal, state or local law concerning affirmative action-equal employment opportunity which are at least equal to the requirements of this Section, as effectuating the provisions of this Section. If the Port Authority determines that by virtue of such compliance with the provisions of any such federal, state or local law that the provisions hereof duplicate or conflict with such law the Port Authority may waive the applicability of the provisions of this Section to the extent that such duplication or conflict exists.

(f) Nothing herein provided shall be construed as a limitation upon the application of any laws which establish different standards of compliance or upon the application of requirements for the hiring of local or other area residents.

(g) Nothing in this Section shall grant or be deemed to grant to the Lessee the right to make any agreement or award for concessions or consumer services at the Airport.

Section 43. **<u>Quiet Enjoyment</u>**

The Port Authority covenants and agrees that as long as it remains the lessee of the Airport, the Lessee, upon paying all rentals hereunder and performing all the covenants, conditions and provisions of this Agreement on its part to be performed, shall and may peacefully and quietly have and enjoy the premises free of any act or acts of the Port Authority except as expressly permitted in this Agreement.

Section 44. **Infringement**

The Lessee represents that it is the owner of or fully authorized to use any and all services, processes, machines, articles, marks, names or slogans used by it in its operations under or in any wise connected with this Agreement. The Lessee agrees to save and hold the Port Authority, its Commissioners, officers, employees, agents and representatives free and harmless of and from any loss, liability, expense, suit or claim for damages in connection with any actual or alleged infringement of any patent, trademark or copyright, or arising from any alleged or actual unfair competition or other similar claim arising out of the operations of the Lessee under or in any wise connected with this Agreement.

Section 45. **Late Charges**

If the Lessee should fail to pay any amount required under this Agreement when due to the Port Authority, including without limitation any payment of basic, percentage, variable or other rental or any payment of utility, or other charges or fees or if any such amount is found to be due as the result of an audit, then, in such event, the Port Authority may impose (by statement, bill or otherwise) a late charge with respect to each such unpaid amount for each late charge period (hereinbelow described) during the entirety of which such amount remains unpaid, each such late charge not to exceed an amount equal to eight-tenths of one percent of such unpaid amount for each late charge period. There shall be twenty-four late charge periods during each calendar year; each late charge period shall be for a period of at least fifteen (15) calendar days except one late charge period each calendar year may be for a period of less than fifteen (but not less than thirteen) calendar days. Without limiting the generality of the foregoing, late charge periods in the case of amounts found to have been owing to the Port Authority as the result of Port Authority audit findings shall consist of each late charge period following the date the unpaid amount should have been paid under this Agreement. Each late charge shall be payable immediately upon demand made at any time therefor by the Port Authority. No acceptance by the Port Authority of payment of any unpaid amount or of any unpaid late charge amount shall be deemed a waiver of the right of the Port Authority to payment of any late charge or late charges payable under the provisions of this Section with respect to such unpaid amount. Each late charge shall be recoverable by the Port Authority in the same manner and with like remedies as if it were originally a part of the rental as set forth in the section of this Agreement entitled "Rental". Nothing in this Section is intended to, or shall be deemed to, affect, alter, modify or diminish in any way (i) any rights of the Port Authority under this Agreement, including without limitation the Port Authority's rights set forth in the section of this Agreement entitled "Termination" or (ii) any obligations of the Lessee under this Agreement. In the event that any late charge imposed pursuant to this Section shall exceed a legal maximum applicable to such late charge, then, in such event, each such late charge payable under this Agreement shall be payable instead at such legal maximum.

Section 46. Obligations In Connection with the Percentage/Variable Rental

The Lessee shall:

(a) Use its best efforts in every proper manner to maintain, develop and increase the business conducted by it hereunder;

(b) Not divert or cause to be diverted, any business from the Airport;

(c) Maintain in accordance with accepted accounting practice during the letting and for one (1) year thereafter and for such further period until the Lessee shall receive written permission from the Port Authority to do otherwise, records and books of account, recording all transactions at, through or in any wise connected with the automobile service station, including but not limited to records of all gasoline, diesel fuel, compressed natural gas and other fuel tank meter readings, all of which records and books of account shall be kept at all times within the Port of New York District;

(d) Permit in ordinary business hours during the letting and for one year thereafter, the examination and audit by the officers, employees, agents and representatives of the Port Authority of such records and books of account;

(e) Permit in ordinary business hours, the inspection by the officers, employees and representatives of the Port Authority of any equipment used by the Lessee, including but not limited to cash registers, tape readings and meter readings;

(f) Furnish to the Port Authority on or before the 20th day of the month following the month in which the Rental Payment Start Date occurs and on or before the twentieth (20th) day of each and every calendar month thereafter including the month following the expiration of the Lease, a statement, sworn to by a responsible executive or fiscal officer of the Lessee, of all gross receipts arising out of the operations of the Lessee hereunder for the preceding month and specifying and applying the percentage stated in paragraphs (3)(a) (i) and (v) of Subdivision A of Section 4 and showing furthermore the total amount of all gallons of gasoline, motor oil, diesel fuel and alternative fuel sold or delivered during the preceding month.

(g) Install and use such cash registers, sales slips, invoicing machines or any other equipment or devices for recording orders taken or services rendered as may be appropriate to the Lessee's business and necessary or desirable to keep accurate records of gross receipts and sales and deliveries of gasoline, motor oil, diesel fuel and compressed natural gas.

(h) In the event that upon conducting an examination and audit as described in paragraph (d) of this Section the Port Authority determines that unpaid amounts are due to the Port Authority by the Lessee, the Lessee shall be obligated, and hereby agrees, to pay to the Port Authority a service charge in the amount of five percent (5%) of each amount determined by the Port Authority audit findings to be unpaid. Each such service charge shall be payable

immediately upon demand (by notice, bill or otherwise) made at any time therefor by the Port Authority. Such service charge (s) shall be exclusive of, and in addition to, any and all other moneys or amounts due to the Port Authority by the Lessee under this Lease or otherwise. No acceptance by the Port Authority of payment of any unpaid amount or of any unpaid service charge shall be deemed a waiver of the right of the Port Authority to payment of any late charge(s) or other service charge(s) payable under the provisions of this Section with respect to such unpaid amount. Each such service charge shall be and become additional rental, recoverable by the Port Authority in the same manner and with like remedies as if it were originally a part of the rental to be paid hereunder. Nothing in this Section is intended to, or shall be deemed to, affect, alter, modify or diminish in any way (i) any rights of the Port Authority under this Lease, including, without limitation, the Port Authority's rights to terminate this Lease or (ii) any obligations of the Lessee under this Lease.

Section 47. **Towing and Emergency Services to be performed by the Lessee**

(a) In connection with the letting hereunder, the Lessee shall have the privilege to operate and shall be obligated to operate an automobile towing service which shall consist of the following:

(1) A service consisting of (i) towing disabled automotive vehicles to the premises at the request of the owner or operator of such vehicle and/or (ii) providing emergency repairs to said disabled vehicles at the place where the vehicle is disabled, if possible, and/or (iii) short term storage thereof at the premises said service for purposes of this Lease being herein called "the Patron service".

(2) A service consisting of towing at the request of the Port Authority abandoned or disabled automotive vehicles on the Airport or vehicles parked in violation of the Port Authority's Rules and Regulation to the location on the Airport specified by the Port Authority (including the premises) and short term storage thereof at the premises, said service being herein called "the Emergency Service"; all of the foregoing services set forth in subdivisions (a)(1) and (a)(2) being sometimes hereinafter called "the Facility Service".

(b) The Lessee shall use such roads, routes, ways and other areas at the Airport as may from time to time be designated by the General Manager of the Airport for use in connection with the Facility Service to be provided by the Lessee hereunder.

(c) The vehicle to be used by the Lessee in furnishing the Facility Service shall be two (2) radio equipped tow trucks capable of lifting and towing passenger automobiles, minivans, vans, light pick-up trucks and limousines the foregoing vehicles being herein called "the tow trucks". The tow trucks shall be painted in such colors, shall bear such inscriptions and signs on the inside and outside thereof and shall have such lights as the Port Authority shall from time to time and at any time prescribe, the Port Authority agreeing that if there are any colors that the Lessee uses in its operations generally, said colors may be used. The Lessee agrees that the tow trucks shall be of a type and shall be so adapted, constructed and equipped as to properly

fulfill the requirements of the Facility Service. Without limiting the foregoing the tow trucks shall contain such automotive equipment as is appropriate or necessary for performing emergency repairs to disabled vehicles and for performing a safe and proper towing operation including towing operations in those enclosed portions of the Facility having eight foot ceilings. In addition the tow trucks shall carry two-way radio equipment tuned to a frequency which would enable it to maintain contact with the radio equipment required to be maintained pursuant to paragraph (h) of this Section 47 and such communication shall be maintained at all times. The tow truck shall be registered under New Jersey State law and shall be approved by the Port Authority prior to its use in the Facility Service.

The Port Authority shall have the right at any time and as often as it may consider it necessary to inspect the tow trucks, all other equipment to be furnished or used by the Lessee and any activities or operations of the Lessee hereunder. Upon request of the Port Authority, the Lessee shall operate or demonstrate the tow trucks' equipment or the equipment owned by or in the possession of the Lessee on the Airport or to be placed or brought on the Airport, and shall demonstrate any activity being carried on by the Lessee hereunder. Upon notification by the Port Authority of any deficiency in the tow trucks or other item of equipment, the Lessee shall promptly make good the deficiency or withdraw the truck or trucks or item of equipment from service, and provide a truck or trucks or other item of equipment of substantially the same capacity and type as the one removed.

(d) In the event the tow trucks shall for any reason other than as set forth in paragraph (c) above be removed from service hereunder, the Lessee shall promptly provide in lieu thereof a vehicle or vehicles which meet all the requirements of this Section. The Lessee shall at all times keep the tow trucks and all other equipment used in the Facility Service clean and in first-class order, maintenance, repair and appearance.

(e) The Lessee shall use the tow trucks and its automotive equipment exclusively in and only in the Facility Service at the Airport. The Lessee hereby agrees to have a sufficient number of drivers actually on duty and actually working so that at all times the Lessee will provide a timely, proper and first-class Facility Service on a 24 hour basis. The Lessee understands that the Port Authority expects that the tow trucks shall under normal conditions respond to a call for the Patron Service no later than ten (10) minutes after the request for the same has been made and the Lessee agrees to comply therewith. In the event that in the Port Authority's opinion the Lessee has failed to provide a timely Patron Service then and in such event and in addition to any other right or remedy available to the Port Authority at law or in equity, the Port Authority may elect to present the Lessee with schedules to be maintained by the Lessee for the operation of the Patron Service and the Lessee hereby agrees to have the number of drivers set forth in said schedules actually on duty and actually working at all times (without interruption for any cause) as set forth in said schedules. The Lessee further agrees that if the schedules initially presented to it by the Port Authority prove insufficient (except during emergencies) and do not provide a timely Patron Service, the Port Authority shall have the right to amend said schedules, including not only an increase in the number of drivers and trucks to be on duty and operated at any one time but also an increase in the total number of tow trucks, but the Port Authority shall not have the right to require more than two (2) additional tow trucks or a total of four (4) tow trucks available to provide the Facility Service at any one time.

It is hereby understood by the Lessee that the requirements under this paragraph (e) for the operation of the Patron Service shall not affect or release the Lessee from its obligation to at all times keep the premises manned and operated by sufficient personnel.

(f) At all times that the premises are open to the public, the Lessee shall maintain a supervisory official at the premises with full authority to direct and control all employees of the Lessee at the Airport performing the Facility Service and who shall be available for consultation with the General Manager of the Airport or his representative on all details of the operation of the Lessee hereunder. Said supervisor shall at all times be in direct contact with the Lessee's personnel by radio and phone.

(g) The Lessee shall make only fair and reasonable charges for the emergency repairs provided under subparagraph (a)(i) of this Section. Separate charges for towing (all vehicles to be towed to the premises as expeditiously as possible) shall be made in accordance with the schedule of rates and charges which are set forth in Schedule X annexed hereto and hereby made a part hereof. The Lessee's schedule of rates and charges for emergency repairs provided under subparagraph (a)(i) of this Section shall be submitted to and be subject to the prior and continuing written approval of the Port Authority. The Port Authority shall examine such schedules of rates and charges and make such modifications therein as it may deem necessary. Any changes thereinafter in the schedules of rates and charges shall be similarly submitted to the Port Authority for its prior written approval, and if necessary, modification. Copies of such schedules shall be made available to the public by the Lessee, if so directed by the Port Authority from time to time and at any time, at locations designated from time to time and at any time by the Port Authority. In addition, the schedules of rates and charges shall be posted in the tow trucks and at the premises. The Lessee agrees to adhere to the rates and charges stated in the aforesaid schedules.

(h) During all times that the premises are open to the public the tow trucks shall be stationed at the premises and there shall also be located and operated on the premises radio equipment permitting the Lessee to maintain radio communication service with the tow trucks. The Lessee shall also have radio equipment permitting the Lessee to maintain radio communication service with the tow trucks on a seven (7) day a week, twenty-four (24) hours a day basis. The Lessee shall maintain telephone service at the premises and at such other location off the Airport where the radio equipment may be located, the telephone number of which is to be displayed on the tow trucks in accordance with paragraph (c) hereof as one which the public may call for the Patron Service.

(i) With respect to the Patron Service, upon receipt of a call therefor, the Lessee will dispatch a tow truck to the location at the Airport of the disabled vehicle. If the Lessee can do so, it will make emergency repairs to the disabled vehicle but only if the Port Authority shall from time to time permit repairs to be made at the location where said disabled vehicle may be and only if said emergency repairs will take no longer than such period of time as the Port Authority shall from time to time upon notice to the Lessee permit. The Lessee shall clean up any oil, grease or other refuse at the area of the repairs and remove the same therefrom. If emergency repairs as aforesaid cannot be so made, the Lessee shall tow said disabled vehicle to

the premises and perform the necessary repairs there but only to the extent that such repairs may be performed at the premises under the provisions of the Lease covering the use of the premises. If the Lessee at the time of its response to the call for the Patron Service determines that the required repairs cannot be performed by the Lessee at the premises, it shall advise the patron to such effect and shall advise the patron further that the patron may call another towing service to remove the car from the Airport. In such event, the Lessee shall be entitled only to the charge for providing emergency repairs. If the patron requests, the Lessee may tow said vehicle to the premises from which place the patron may arrange for further towing service. Lessee understands that the Facility Service is to be performed exclusively on the Airport and that the tow trucks will not go off the Airport.

(j) (1) At the oral direction of the General Manager or his authorized representative, the Lessee will promptly provide to the Port Authority the Emergency Service by providing the tow trucks for use in an emergency. An emergency as used hereunder shall mean any situation at the Airport which the General Manager or his authorized representative determines to be an emergency. The Port Authority may have a police officer or other representative in the tow truck or trucks and the Lessee shall require its drivers to comply with the directions of said Port Authority representatives. The Lessee agrees that the Port Authority may use the tow trucks 24 hours a day and for such number of consecutive days as the Port Authority may require. The Lessee agrees that it shall have at all times drivers available to operate and who shall operate the tow trucks to be used in the Emergency Service. The Lessee also agrees that it shall have a sufficient number of drivers available so that rested drivers will be available at all times and so that no driver would be required to work more than a period of 12 consecutive hours. During the Emergency Service, the Port Authority shall have the right to use the radio equipment therein. In addition, the Port Authority shall pay to the Lessee for each tow truck actually engaged in the Emergency Service at the rate of $20.00 Dollars and No Cents per vehicle. No other charges shall be made to the Port Authority and the Lessee shall bear the entire cost of the tow trucks and the drivers, including but not limited to fuel, oil, insurance and repairs.

(2) With respect to the Emergency Service, upon receipt of a call from the Port Authority's Police Desk at the Airport or from the Airport Operations Office at the Airport or from such other office as may from time to time be designated by notice from the Port Authority, the Lessee will dispatch the tow truck to the location at the Airport as directed by the Port Authority in its call. The Lessee will pick up the vehicle designated by the Port Authority to be picked up but only if a police officer or other representative of the Port Authority is present and the Lessee shall require its drivers to comply with the directions of said Port Authority representatives. The Lessee shall tow said vehicle to a Port Authority location, if the Port Authority representative so requires, or otherwise to the premises. If the vehicle is towed to the premises, the Lessee shall keep and store said vehicle therein until the same is delivered to "an authorized person", as hereinafter defined, or to the Port Authority, as hereinafter provided, in the presence of and as directed by a police officer or other Port Authority representative. When the Lessee picks up and tows away a vehicle, and when the Lessee surrenders up a vehicle to an authorized person or to the Port Authority, it shall execute and deliver to the Port Authority's police officer or other representative thereat a form reflecting the action taken. The Lessee hereby acknowledges and agrees that all forms executed by the driver of the tow truck or any

other personnel of the Lessee, its sublessee or operator shall be deemed duly executed and authorized on behalf of the Lessee and the Lessee shall be bound thereby. The Port Authority shall deliver to the Lessee an acknowledgment of authority to release said vehicle to the authorized person.

(3) The Lessee shall upon request of the Port Authority from time to time, or periodically, deliver to the Port Authority's Police Desk at the Airport and to the Airport Operations Office at the Airport a written statement signed by an authorized employee of the Lessee setting forth the vehicles which are as of the date of the statement in the possession of the Lessee at the premises with the appropriate location and identity of each vehicle and the period of time each such vehicle has been stored. The Lessee shall have no obligation to store any vehicle at the premises under the Emergency Service for a period greater ten (10) days.

(4) "Authorized person" as used hereunder shall mean the person who received authority from a Police Desk officer of the Port Authority at the Airport, or his designated representative, and to whom said officer delivers a form executed by said desk officer authorizing said person to receive his vehicle. The Lessee shall require said authorized person to execute a form acknowledging receipt of said car, a true copy of which shall be supplied to the Port Authority.

(5) At the direction of the Port Authority the Lessee shall deliver any vehicle stored at the premises to such location on the Airport as the Port Authority shall from time to time specify. The Port Authority shall deliver to the Lessee at such time a form acknowledging receipt of such vehicle.

(6) The Port Authority hereby agrees to pay to the Lessee the Uncollected Emergency Service Amount which shall mean the sum of: (i) the charge for picking up and towing any vehicle to a Port Authority location as directed by the Port Authority representative pursuant to subparagraph (j)(i) hereof; and (ii) the charge for picking up and towing to the premises as directed by the Port Authority pursuant to subparagraph (j)(i) hereof, and the storage charges therefor, if any, which charges as of the time that the Port Authority directs the Lessee to deliver said vehicle to the Port Authority pursuant to subparagraph (5) hereof are unpaid or which charges the authorized person refused to pay to the Lessee and the Port Authority nevertheless directs that the car be released to such person. The charges shall be as set forth in Schedule X annexed hereto and shall be paid monthly.

(k) The Lessee shall procure all licenses, certificates, permits, franchises or other authorization from all governmental authorities, if any, having jurisdiction over the operations of the Lessee, which may be necessary for the conduct of its operation of the Facility Service. Neither the execution of this Agreement nor anything contained herein shall be construed to be a grant of any franchise, consent, license, permit, right or privilege of any nature or kind whatsoever to operate tow trucks or any other vehicles outside the Airport or over the public streets or roads in any County of the State of New Jersey. The Lessee shall promptly observe, comply with and execute the provisions of any and all present and future governmental laws, rules, regulations, requirements, orders and directions which may pertain or apply to the Facility Service. The Lessee's obligations to comply with governmental requirements are

provided herein for the purpose of assuring proper safeguards for the protection of persons and property at the Airport, and are not to be construed as a submission by the Port Authority to the application to itself of such requirements or any of them.

(l) If any type of strike, boycott, picketing, work stoppage, slowdown or other labor activity is directed against the Lessee at the Airport or against any operations with respect to the Facility Service, whether or not the same is due to the fault of the Lessee and whether or not caused by the employees of the Lessee, and if any of the foregoing, in the opinion of the Port Authority, adversely affects or is likely adversely to affect the operation of the Airport, or the operations of other permittees, lessees or licensees thereat, or the operations of the Lessee of the Facility Service, the Port Authority shall have the right at any time during the continuance thereof by twenty-four (24) hours notice to suspend the operation by the Lessee of the Facility Service, and during the period of the said suspension the Lessee shall not conduct said Service at the Airport. The foregoing shall not limit, affect or be deemed to limit or affect any other right of the Port Authority resulting from a cessation of operations by the Lessee whether granted hereunder or otherwise.

(m) All the terms, covenants, conditions and provisions of the Lease, shall pertain and apply with like effect to the operation by the Lessee of the Facility Service, except those which are by their very nature inapplicable to the Facility Service and except as to those which are covered by express provisions of this Section.

(n) In addition to all other obligations hereunder and without limiting the same, the Lessee agrees that the Towing Service will be a first-class operation and the Lessee will furnish all fixtures, equipment, personnel (including licensed personnel as necessary), supplies, materials and other facilities and replacements necessary or proper therefor including but not limited to a dolly or other equipment necessary to tow vehicles having locked wheels.

(o) Nothing contained in this Section shall grant or be deemed to grant to the Lessee an exclusive right to operate the Facility Service or any component service thereof.

(p) In addition to all other rights hereunder and without limiting the Lessee's obligations hereunder, the Port Authority shall have the right to revoke without cause, and upon thirty (30) days' prior written notice to the Lessee the privilege and obligation of the Lessee to provide the Emergency Service, and from and after the effective date of said notice the Lessee shall no longer provide the Emergency Service but the privilege and obligation hereunder to provide the Patron Service and other terms and provisions of the Lease, as amended hereunder, shall continue in full force and effect.

(q) The Lessee shall at the time of rendering each statement required of the Lessee in Sections 4 and 46 hereof submit a further written statement setting forth its computation of the amount due to the Lessee from the Port Authority for the preceding calendar month if any, for the Emergency Service in accordance with paragraph (j) hereof. Said statement shall contain such itemization and information as to the amounts due to the Lessee as the Port Authority shall from time to time request. The Lessee may deduct from the payments to be made by the Lessee pursuant to Section 4 hereof the amount due to the Lessee from the Port Authority

as computed by the Lessee in such statement. However, it is hereby expressed and agreed that no such statement by the Lessee and no such deduction by it of the amount set forth therein shall be or be deemed to have been conclusively determined until the amount has been audited and verified by the Port Authority. Moreover, until such audit and verification, the Lessee hereby agrees to promptly remit to the Port Authority, upon written demand, all or such portion of the amount so deducted which the Port Authority contends is in excess of the proper amount to be deducted.

(r) The Lessee shall comply with all directions given from time to time by the General Manager of the Airport or his designated representative in connection with the Facility Service as herein provided.

(s) The Lessee hereby assumes complete and sole responsibility for all loss or damage to any vehicles including any personal property contained therein which the Lessee tows, repairs or stores under the Facility Service. The Lessee shall indemnify and hold harmless the Port Authority, its Commissioners, officers, agents, representatives and employees from and against all claims and demands of third persons (including but not limited to the owners of the vehicles) just or unjust, for personal injuries, (including death) or property damages including the theft, destruction or loss of the vehicles and any personal property contained therein (except claims or demands arising out of the affirmative acts of the Port Authority, its employees, agents or representatives), arising or alleged to arise out of the operation by the Lessee of the Facility Service. If so directed by the Port Authority, the Lessee shall, at its own expense, defend against such claims and demands, in which event it shall not without obtaining express advance written permission from the General Counsel of the Port Authority, raise any defense involving in any way the jurisdiction of the tribunal over the person of the Port Authority, the immunity of the Port Authority, its Commissioners, officers, agents or employees, the governmental nature of the Port Authority, or the provision of any statutes respecting suits against the Port Authority.

(t) This Section shall not constitute the Lessee, or any sublessee or operator performing the Facility Service the agent or representative of the Port Authority. The Lessee shall perform the Facility Service as an independent contractor and its officers and employees and the officers and employees of any sublessee or operator shall not be or be deemed to be agents, servants or employees of the Port Authority.

(u) The Lessee shall not assign or transfer its privilege and obligation to provide the Facility Service and any such assignment or transfer shall be void and of no effect as to the Port Authority.

Section 48. **<u>Sales and Services by the Lessee</u>**

(a) A principal purpose of the Port Authority in entering into this Agreement is to have available for passengers, travelers and other users of the Airport, all other members of the public, and persons employed at the Airport, the merchandise and/or services which the Lessee is obligated to sell and/or render hereunder, all for the better accommodation,

convenience and welfare of such individuals and in fulfillment of the Port Authority's obligation to operate the Airport for the use and benefit of the public. Consistent with the provisions of Section 3 and Section 47 of the Lease, the Lessee shall conduct, at the premises, a first-class operation and will furnish and install all fixtures, equipment, personnel (including licensed personnel as necessary), supplies, materials, and other facilities and replacements necessary or proper therefor. The Lessee shall sell first-class items of merchandise including a full line of automotive accessory items, such as batteries and tires, including medium and economy priced lines of dependable and serviceable quality. All prices and charges shall be subject to the prior written approval of the Port Authority, and prior to the furnishing of any services or sale of any merchandise hereunder the Lessee shall prepare and submit or cause to be prepared and submitted to the Port Authority schedules of rates and prices and any discounts therefrom for all services and merchandise, which shall not exceed reasonable prices for similar merchandise and/or services sold in the area immediately surrounding the Airport. Any changes thereafter in the schedules shall be similarly submitted to the Port Authority for its prior written approval. All such schedules shall be made available to the public, including but not limited to, prominent display at the premises at locations therein as may be designated from time to time by the Port Authority. The Lessee agrees to adhere to the rates, charges and discounts, if any, stated in the approved schedules. If the Lessee applies any rate in excess of the approved rates or extends a discount less than an approved discount, the amount by which the charge based on such actual rate or actual discount deviates from a charge based on the approved rates and/or discounts shall constitute an overcharge which will, upon demand of the Port Authority or a customer, be promptly refunded to the customer. Notwithstanding any repayment of overcharges to a customer, any such overcharge or undercharge shall constitute a breach of the Lessee's obligations hereunder and the Port Authority shall have all remedies consequent upon breach which would otherwise be available to it at law, in equity or by reason of this Lease.

(b) The Lessee shall furnish upon the request of any patron or customer, without charge, a receipt for any sale or service rendered at the premises or at the Airport.

(c) The Lessee shall not enter into any agreement or understanding, express or implied, binding or non-binding, with any other person who may furnish services at the Airport similar to those furnished hereunder which will have the effect of (1) fixing rates and charges to be paid by users of the services; (2) lessening or preventing competition between the Lessee and such other furnishers of services; or (3) tending to create a monopoly on the Airport in connection with the furnishing of such services. In order that the Port Authority may enforce the Lessee's obligations hereunder, the Lessee shall before entering into any agreement or understanding, express or implied, binding or non-binding, with any person who may furnish services at the Airport similar to those furnished hereunder, notify the Port Authority of all the details thereof, furnishing a copy of the proposed agreement if the same has been reduced to writing or a memorandum of the same, if oral, and similarly shall notify the Port Authority at the time of any change in or extension of an existing agreement. Such proposed agreements or understandings or changes or extensions of existing ones shall be subject to the approval of the Port Authority and unless approved, shall not be entered into by the Lessee.

(d) The Lessee shall be open for and conduct business at the premises seven (7) days a week, twenty-four (24) hours a day. The Port Authority's determination of proper business hours, as evidenced from time to time by notice to the Lessee, shall control.

(e) The Lessee shall make available to the public restroom facilities maintained in a manner acceptable to the Port Authority.

(f) The Lessee shall have on the premises at all times an employee able to communicate effectively in the English language so as to perform the services set forth in Sections 3 and 47 hereof.

Section 49. Postponement

If the Port Authority shall not give possession of the premises or any part thereof on the date fixed in Section 2 hereof for the commencement of the letting hereunder by reason of the fact that the premises or any part thereof are in the course of construction, repair, alteration or improvement or by reason of the fact that the occupant thereof failed or refused to deliver possession to the Port Authority, or by reason of any cause or condition beyond the control of the Port Authority, the Port Authority shall not be subject to any liability for the failure to give possession on said date. No such failure to give possession on the date of commencement of the letting as set forth in Section 2 hereof shall in any wise affect the validity of this Agreement or the obligations of the Lessee hereunder, nor shall the same be construed in any wise to extend the term of the letting as set forth therein beyond the expiration date. However, until possession of the premises or any part thereof is tendered by the Port Authority to the Lessee, the effective date of the letting of the premises or any part thereof shall be made by notice given at least five (5) days prior to the effective date of the tender and in the event that such notice of tender is not given for possession to commence on or before one hundred eighty (180) days after the date stated in Section 2 hereof for commencement of the letting of the premises hereunder then this Agreement shall be deemed cancelled, except that each party shall and does hereby release the other party of and from any and all claims or demands based on this Agreement, or a breach or alleged breach thereof.

Section 50. Services

The Port Authority shall not be obligated to perform or furnish any services or utilities whatsoever in connection with this Lease or the use and occupancy of the premises hereunder nor to police the same or keep the same free from snow, ice or otherwise unobstructed and available for use by the Lessee.

Section 51. Utility Lines

The Port Authority, shall, if and to the extent required, bring appropriate roadway access stubs and service lines for the supply of cold water, electric power, telephone (limited to four telephone conduits) and sanitary and storm sewers (said service lines and sanitary and storm sewers being hereinafter collectively referred to as "utility service lines") to such locations, at the perimeter of the site or to other locations off the site as the Port Authority shall determine. The Lessee at its sole cost and expense is hereby obligated to tie its utility lines and roadways into such locations at or near the perimeter of the site where such utility service lines and roadway access stubs will be brought by the Port Authority hereunder. The Port Authority shall have no obligation to make available any utility service lines or roadway access stubs to any location with respect to the premises prior to receiving the certificate of the Lessee and of the Lessee's architect or engineer that all of the construction work has been completed or that a portion of the construction work is properly usable, all as provided in paragraph (h) of Section 6 hereof, and that the Lessee is ready to tie its utility lines and roadways into the utility service lines and roadway access stubs to be furnished by the Port Authority to the premises.

Section 52. **Relationship of the Parties**

This Agreement does not constitute the Lessee, the agent or representative of the Port Authority for any purpose whatsoever. Neither a partnership nor any joint adventure is hereby created, notwithstanding the fact that all or a portion of the rental to be paid hereunder may be determined by gross receipts from the operations of the Lessee hereunder.

Section 53. **Definitions**

The following terms, when used in this Agreement, shall, unless the context shall require otherwise, have the respective meanings given below:

(a) "Airport" or "Facility" shall mean the land and premises in The City of Newark, in the County of Essex and State of New Jersey, which are westerly of the right of way of the Central Railroad of New Jersey and are shown upon the exhibit attached to the said agreement between the City of Newark and the Port Authority referred to in paragraph (b) below, said exhibit being marked "Exhibit A", as contained within the limits of a line of crosses appearing on said exhibit and designated "Boundary of Terminal Area in City of Newark, and the lands contiguous thereto which may have been heretofore or may hereafter be acquired by the Port Authority to use for air terminal purposes.

(b) "Basic Lease" shall mean the agreement between the City of Newark and the Port Authority dated October 22, 1947, as the same from time to time may have been or may be supplemented or amended. Said agreement dated October 22, has been recorded in the Office of the Register of Deeds for the County of Essex, on October 30, 1947, in Book E-110 of Deeds at pages 242 et seq., as the same from time to time may have been or may be supplemented and amended.

(c) "Agreement" shall mean this agreement of lease.

(d) "Lease" shall mean this agreement of lease.

(e) "Letting" shall mean the letting under this Agreement for the original term stated herein, and shall include any extension thereof.

(f) "Premises shall mean and include the land, the buildings, structures and other improvements located or to be located or to be constructed therein or thereon, the equipment permanently affixed or permanently located therein, such as electrical, plumbing, sprinkler, fire protection and fire alarm, heating, steam, sewerage, drainage, refrigeration, communications, gas and other systems, and their pipes, wires, mains, lines, tubes, conduits, equipment and fixtures and all paving, drains, culverts, ditches and catch-basins.

(g) "Manager of the Airport" or "General Manager of the Airport" shall mean the person or persons from time to time designated by the Port Authority to exercise the powers and functions vested in the General Manager by this Agreement; but until further notice from the Port Authority to the Lessee it shall mean the General Manager (or the temporary or acting General Manager) of the Airport for the time being, or his duly designated representative or representatives.

(h) "Unamortized Capital Investment" shall mean for purposes of this Lease, the amount of the Lessee's investment in the premises arising out of the performance by the Lessee of the construction work pursuant to and set forth in Section 2 of this Lease with respect to the multi-fuel vehicle service station after deduction therefrom of an amount equivalent to an allowance for depreciation and amortization. Such allowance will be computed on a straight-line basis over a period commencing on the Completion Date, as established pursuant to Section 6 (f)(2) hereof to and including the day immediately prior to the twentieth (20th) anniversary of the Completion Date.

The foregoing computation to be made shall not take into consideration the effect of accelerated amortization, if any, granted to or taken by the Lessee on its books or otherwise under the provisions of Section 168(a) of Title 26 USCA or similar legislation hereafter enacted.

For purposes of this paragraph (h) the Lessee's investment in the premises shall be equal to the sum of: (1) the amounts paid by the Lessee to independent contractors for work actually performed and labor and materials actually furnished in connection with the construction of the station set forth in and pursuant to Section 6 of the Lease; and (2) the payments made and expenses incurred by the Lessee, in connection with such construction, for engineering, architectural, professional and consulting services and the supervision of construction, provided, however, that such payments and expenses pursuant to this item (2) shall not exceed ten percent (10%) of the amounts described in item (1); in each case, as the above-mentioned amounts, payments and expenses are evidenced, from time to time, by certificates of a responsible fiscal officer of the Lessee, sworn to before a Notary Public and delivered to the Port Authority, which certificates shall (i) set forth, in reasonable detail, the amounts paid to specified

independent contractors, the payments made to other specified persons and the other expenses incurred by the Lessee, which have not previously been reported in certificates delivered to the Port Authority, (ii) have attached thereto reproduction copies or duplicate originals of the invoices of such independent contractors and other persons acknowledging the receipt by them of such amounts and payments, and (iii) certify that the amounts, payments and expenses therein set forth constitute portions of the Lessee's investment in the premises for the purposes of this Lease.

(i) "Governmental Authority", "governmental board", and "governmental agency" shall mean federal, state, municipal and other governmental authorities, boards and agencies of any state, nation or government, except that it shall not be construed to include The Port Authority of New York and New Jersey, the lessor under this lease.

(j) "Person" shall mean not only a natural person, corporation or other legal entity, but also two or more natural persons, corporations or other legal entities acting jointly as a firm, partnership, unincorporated association, consortium, joint adventurers or otherwise.

(k) "Environmental Damages" shall mean any one or more of the following: (i) the presence on, about or under the premises of any Hazardous Substance and/or (ii) the disposal, release or threatened release of any Hazardous Substance from the premises, and/or (iii) the presence of any Hazardous Substance on, about or under other property at the Airport as a result of the Lessee's use and occupancy of the premises or a migration of a Hazardous Substance from the premises, and/or (iv) any personal injury (including wrongful death) or property damage arising out of or related to any such Hazardous Substance, and/or (v) the violation of any Environmental Requirements pertaining to any such Hazardous Substance, the premises and/or the activities thereon.

(l) "Environmental Requirements" and "Environmental Requirement" shall mean all applicable present and future laws, statutes, enactments, resolutions, regulations, rules, ordinances, codes, licenses, permits, orders, approvals, plans, authorizations, concessions, franchises, requirements and similar items, of all governmental agencies, departments, commissions, boards, bureaus, or instrumentalities of the United States, states and political subdivisions thereof and all applicable judicial, administrative, and regulatory decrees, judgments, and orders relating to the protection of human health or the environment, and in the event that there shall be more than one compliance standard, the standard for any of the foregoing to be that which requires the lowest level of a Hazardous Substance, the foregoing to include without limitation:

(i) All requirements pertaining to reporting, licensing, permitting, investigation, and remediation of emissions, discharges, releases, or threatened releases of Hazardous Substances into the air, surface water, groundwater, or land, or relating to the manufacture, processing, distribution, use, treatment, storage, disposal, transport, or handling of Hazardous Substances; and

(ii) All requirements, pertaining to the protection of the health and safety of employees or the public.

(m) "Hazardous Substance" and "Hazardous Substances" shall mean and include without limitation any pollutant, contaminant, toxic or hazardous waste, dangerous substance, potentially dangerous substance, noxious substance, toxic substance, flammable, explosive, radioactive material, urea formaldehyde foam insulation, asbestos, polychlorinated biphenyls (PCBs), chemicals known to cause cancer or reproductive toxicity, petroleum and petroleum products and other substances which has or in the future shall be declared to be hazardous or toxic, or the removal of which has or in the future shall be required, or the manufacture, preparation, production, generation, use, maintenance, treatment, storage, transfer, handling or ownership of which has or in the future shall be restricted, prohibited, regulated or penalized by any Environmental Requirement.

Section 54. **Storage Tanks**

(a) All storage tanks, if any, installed in the premises as of the Commencement Date as defined in Section 2 hereof, together with all storage tanks installed in the premises during the term of the letting subsequent to the Commencement Date and its or their appurtenances, pipes, lines, fixtures and other related equipment are hereinafter collectively called the "Storage Tanks" and singularly called a "Storage Tank". The Lessee hereby agrees that title and ownership of the Storage Tanks shall be and remain in the Lessee, notwithstanding anything to the contrary in the Lease or any construction or alteration application. The Port Authority has made no representations or warranties with respect to the Storage Tanks or their location and shall assume no responsibility for the Storage Tanks. All Storage Tanks installed subsequent to said Commencement Date shall be installed pursuant to the terms and conditions of the Lease including without limitation Section 6 thereof and nothing in this Section shall or shall be deemed to be permission or authorization to install any Storage Tanks.

(b) Without limiting the generality of any of the provisions of the Lease, the Lessee agrees that it shall be solely responsible for maintaining, testing and repairing the Storage Tanks. The Lessee shall not perform any servicing, repairs or non-routine maintenance to the Storage Tanks without the prior written approval of the Port Authority.

(c) It is hereby agreed that title to and ownership of the Storage Tanks shall remain in the Lessee until the earlier to occur of (1) receipt by the Lessee of notice from the Port Authority that title to the Storage Tanks shall vest in the Port Authority or in the City of Newark or (2) receipt by the Lessee of notice from the Port Authority that the Port Authority waives its right to require the Lessee to remove the Storage Tanks from the premises as set forth in paragraph (i) below. The vesting of title to the Storage Tanks in the Port Authority or in the City of Newark, if at all, in accordance with the foregoing item (1) shall in no event relieve the Lessee from the obligation to remove the Storage Tanks from and restore the premises in accordance with paragraph (i) below.

(d) Without limiting the generality of any other term or provision of the Lease, the Lessee shall, at its cost and expense, comply with all Environmental Requirements pertaining to the Storage Tanks and any presence, pumping, pouring, venting, emitting, emptying, leakage, deposit, spill, discharge or other release of Hazardous Substances from the Storage Tanks or in connection with their use, operation, maintenance, testing or repair (any such presence, pumping, pouring, venting, emitting, emptying, leakage, deposit, spill, discharge or other release during the period the Lessee shall use or occupy the premises or use the Storage Tanks being hereinafter called a "Discharge") including without limitation registering and testing the Storage Tanks, submitting all required clean-up plans, bonds and other financial assurances, performing all required clean-up and remediation of a Discharge and filing all reports, making all submissions to, providing all information required by, and complying with all requirements of, all governmental authorities pursuant to the Environmental Requirements.

Nothing in the foregoing shall be construed as a submission by the Port Authority to the application to itself of the Environmental Requirements, *provided,* however, no immunity or exemption of the Port Authority from the Environmental Requirements shall excuse the compliance therewith by the Lessee or shall be grounds for non-compliance therewith by the Lessee.

(e) Without limiting the terms and provisions of Section 15 of the Lease, the Lessee hereby assumes all risks arising out of or in connection with the Storage Tanks and all Discharges whether or not foreseen or unforeseen and shall indemnify and hold harmless the Port Authority, its Commissioners, officers, agents and employees from and against (and shall reimburse the Port Authority for their costs and expenses including without limitation penalties, fines, liabilities, settlements, damages, attorney and consultant fees, investigation and laboratory fees, clean-up and remediation costs, court costs and litigation expenses), all claims and demands, just or unjust, of third persons (such claims and demands being hereinafter in this Section referred to as "Claims" and singularly referred to as a "Claim") including but not limited to those for personal injuries (including death), property damages, or environmental impairment, arising or alleged to arise out of or in any way related to, the failure of the Lessee to comply with each and every term and provision of the Lease, or the Storage Tanks, or any Discharge, or any lawsuit brought or threatened, settlement reached or any governmental order relating to the Storage Tanks or a Discharge, or any violation or any Environmental Requirements or demands of any governmental authority based upon or in any way related to the Storage Tanks or a Discharge, and whether such arise out of the acts or omissions of the Lessee or of customers or contractors of the Lessee or of third persons or out of the acts of God or the public enemy or otherwise including claims by the City of Newark against the Port Authority pursuant to the provisions of the Basic Lease (as defined in the Lease) whereby the Port Authority has agreed to indemnify the City against claims. It is understood the foregoing indemnity shall cover all claims, demands, penalties, settlements, damages, fines, costs and expenses of or imposed by any governmental Authority under the Environmental Requirements.

If so directed the Lessee shall at its expense defend any suit based upon any such Claim (even if such Claim is groundless, false or fraudulent) and in handling such it shall not without first having express advance permission from the General Counsel of the Port Authority raise any defense involving in any way the jurisdiction of the tribunal over the person of the Port

Authority, the immunity of the Port Authority, its Commissioners, officers, agents or employees, the governmental nature of the Port Authority or the provisions of any statutes respecting suits against the Port Authority.

(f) The Lessee's obligations under this Section shall survive the expiration or earlier termination of the Lease.

(g) In addition to the requirements of Section 8 of the Lease and paragraph (d) hereof, the Port Authority shall have the right upon notice to the Lessee to direct the Lessee, at the Lessee's sole cost and expense, (i) to perform such reasonable testing of the Storage Tanks as the Port Authority shall direct and to perform such testing of the soil, subsoil and ground water of the premises and of such surrounding areas as the Port Authority shall direct, and (ii) to clean-up and remediate any Discharge, regardless of whether any Environmental Requirement or governmental authority shall require such testing, clean-up or remediation, which testing, clean-up and remediation shall be performed pursuant to an alteration application prepared by the Lessee and submitted to the Port Authority for the Port Authority's approval.

(h) In the Lessee's use and operation of the Storage Tank, the Lessee shall not permit any Hazardous Substance from entering the ground including without limitation (subject to Section 6 hereof) installing appropriate spill and overfill devices and placing an impervious material, such as asphalt or concrete, over the ground area above and in the vicinity of the Storage Tanks.

(i) (1) The Lessee shall remove the Storage Tanks from the premises on or before the expiration of the Lease and dispose of the Storage Tanks off the Airport in accordance with all Environmental Requirements.

(2) Without limiting the foregoing or any other term or provision of this Agreement, any removal of the Storage Tanks shall be performed pursuant to an alteration application prepared by the Lessee and submitted to the Port Authority for the Port Authority's approval and, in connection with such removal, the Lessee shall restore the premises to the same condition existing prior to the installation of the Storage Tanks, shall perform such testing of the Storage Tanks and of the soil, sub-soil and ground water in the vicinity of the Storage Tanks as shall be required by the Port Authority and shall clean-up and remediate contamination disclosed by said testing. In the event the Lessee does not remove the Storage Tanks as required by subparagraph (1) above, the Port Authority may enter upon the premises and effect the removal and disposal of the Storage Tanks, restoration of the premises and such remediation and the Lessee hereby agrees to pay all costs and expenses of the Port Authority arising out of such removal, disposal, restoration and remediation.

Section 55. **<u>Federal Airport Aid</u>**

The Port Authority has applied for and received a grant or grants of money from the Administrator of the Federal Aviation Administration pursuant to the Airport and Airways Development Act of 1970, as the same has been amended and supplemented or superseded by

similar federal legislation, and under prior federal statutes which said Act superseded and the Port Authority may in the future apply for and receive further such grants. In connection therewith, the Port Authority has undertaken and may in the future undertake certain obligations respecting its operation of the Airport and the activities of its contractors, lessees and permittees thereon. The performance by the Lessee of the covenants, promises and obligations contained in this Lease is therefore a special consideration and inducement to the making of this Agreement by the Port Authority, and the Lessee further covenants and agrees that if the Administrator of the Federal Aviation Administration or any other governmental officer or body having jurisdiction over the enforcement of the obligations of the Port Authority in connection with the Federal Airport Aid, shall make any orders, recommendations or suggestions respecting the performance by the Lessee of such covenants, promises and obligations under this Agreement, the Lessee will promptly comply therewith, at the time or times when and to the extent that the Port Authority may direct.

Section 56. **Lessee's Rights Non-Exclusive**

The rights and privileges granted to the Lessee are non-exclusive and neither the execution of this Lease by the Port Authority nor anything contained herein shall grant or be deemed to grant to the Lessee any exclusive rights or privileges including but not limited to the right to design, construct, lease, or operate an automobile service station and the right to provide towing emergency repair service at the Airport.

Section 57. **One Hundred Twenty Day Termination**

(a)(i) The Port Authority shall have the right to terminate this Agreement and the letting hereunder, without cause, at any time, on one hundred twenty (120) days' prior written notice to the Lessee. In the event that this Agreement and the letting hereunder is terminated pursuant to this Section, this Agreement and the letting hereunder shall cease and expire as if the effective date of termination stated in the notice were the date originally stated herein for the expiration of this Agreement.

(ii) Further, in the event the Port Authority exercises its right to revoke or terminate this Agreement for any reason other than "without cause", the Lessee shall be obligated to pay to the Port Authority an amount equal to all costs and expenses reasonably incurred by the Port Authority in connection with such termination, including without limitation any re-entry, regaining or resumption of possession, collecting all amounts due to the Port Authority, the restoration of any space which may be used and occupied under this Lease (on failure of the Lessee to have it restored), preparing such space for use by a succeeding lessee, the care and maintenance of such space during any period of non-use of the space, the foregoing to include, without limitation, personnel costs and legal expenses (including but not limited to the cost to the Port Authority of in-house legal services), repairing and altering the space and putting the space in order (such as but not limited to cleaning and decorating the same).

(b) The Lessee is obligated by this Agreement to furnish and install all fixtures and equipment and make all improvements in the premises, necessary or proper for its operations hereunder. In the event of termination by the Port Authority under this Section, the Port Authority shall pay the Lessee a *pro rata* share of the Lessee's cost in supplying and installing all such fixtures and equipment and making all such improvements excluding any replacements thereof. The cost and the *pro rata* share thereof shall be ascertained as stated in paragraph (c) hereof, provided, however, that tender of payment of said prorated cost by the Port Authority to the Lessee shall not be prerequisite to the exercise of the right of termination under this Section, but the Lessee shall be entitled to 4% interest per annum on said prorated cost for the period between the effective date of termination and the date of tender of payment (excluding any portion of the period prior to the rendering by the Lessee to the Port Authority of a statement and other documents of cost). On the payment by the Port Authority of said prorated cost and any interest due thereon, all fixtures, equipment and improvements including replacements furnished by the Lessee in the premises and all interest of the Lessee therein which have not already become the property of the Port Authority shall be and become the property of the Port Authority and the Lessee shall execute any and all instruments necessary to transfer title to any such interest, provided, however, that the Port Authority may by notice relinquish its right to any such fixtures, equipment or improvements and the provisions of Sections 48, 6 and 28 shall apply thereto.

(c) Cost and Proration Thereof:

(i) To the extent permitted by sound accounting practice, the sum of the following items of cost incurred by the Lessee for such equipment and fixtures and the installation thereof and the making of such improvements as are necessary to initially equip and improve the premises for the Lessee's commencement of operations hereunder, all as mentioned in the Section of the Agreement entitled "One Hundred Twenty Day Termination," and to the extent that such sum does not exceed Six Million Dollars and No Cents ($6,000,000.00) shall constitute the "cost" under the said Section and under subdivisions (ii), (iii), (iv), (v), (vi), and (vii) hereof:

(aa) Direct labor and material costs;

(bb) Contract costs for purchases and installation, including, without limitation, furniture, fixtures, and equipment, but excluding those of the types mentioned in the following subdivision (cc);

(cc) Engineering, architectural, planning, designing, financing, interest, insurance, and other overhead or carrying charges which are due for a period ending not later than the date of completion of installation of any such initial equipment, fixtures or improvements for which they are incurred, and not to exceed 20% of the total of the amounts covered by subdivisions (aa) and (bb) above.

(ii) A statement of the cost detailing all the foregoing including copies of invoices and contracts and certified by a responsible officer of the Lessee shall be delivered by

the Lessee to the Port Authority not later than ninety (90) days after the complete supplying and the making of all such initial improvements, and the Lessee shall permit the Port Authority, by its agents, employees and representatives, at all reasonable times prior to a final settlement or determination of cost, to examine an audit the records and books of account within the Port of New York District during such time.

(iii) If the Lessee includes in cost any items as having been incurred but which, in the opinion of the Port Authority, if so incurred is not an item properly chargeable to cost under sound accounting practice, then the Port Authority shall give written notice to the Lessee stating its objection to any such item and the grounds therefor. Determinations of the Port Authority hereunder shall be final.

(iv) The proration of cost as referred to in the Section of the Agreement entitled "One Hundred Twenty Day Termination" shall be ascertained by multiplying the cost by a fraction, the numerator of which shall be the number of whole calendar months (in the term of the letting as originally set forth) subsequent to the effective date of termination, and the denominator of which shall be the total number of months in the term of the letting as originally set forth.

(v) Notwithstanding any other provision of this Section in ascertaining the amount that the Port Authority shall be obligated to pay to the Lessee under said Section the cost computed as heretofore stated in this paragraph (c) shall be diminished by the amount that any part of the components of cost as stated in subdivisions (aa), (bb), and (cc) of subdivision (i) above are secured by liens, mortgages, other encumbrances or conditional bills of sale on such equipment, fixtures and improvements, unless such liens, mortgages, other encumbrances, or conditional bills of sale are paid and discharged of record prior to or simultaneously with the tender of payment of the prorated cost by the Port Authority to the Lessee; by the cost, if any incurred by the Port Authority to demolish the Lessee's facility upon the termination of the term of the letting and to restore the premises, and less any other amounts whatsoever due under this Agreement from the Lessee to the Port Authority. The Lessee may use any portion of the prorated cost tendered by the Port Authority to the Lessee to discharge of record any liens, mortgages, other encumbrances or conditional bills of sale on its equipment, fixtures and improvements. In no event whatsoever shall cost, as defined and computed in accordance with this paragraph (c) and as used in this Section include any expenses, outlays or charges whatsoever by or for the account of the Lessee for or in connection with any equipment or fixtures or the making of any improvement mentioned in this Section unless said equipment, fixtures and/or improvements are actually and completely installed in and/or made to the premises.

Section 58. <u>Force Majeure</u>

The Port Authority shall not be liable for any failure, delay or interruption in performing its obligations hereunder due to causes or conditions beyond the control of the Port Authority. Further, the Port Authority shall not be liable unless the failure, delay or interruption shall result from failure on the part of the Port Authority to use reasonable care to prevent or reasonable efforts to cure such failure, delay or interruption.

Section 59. **Environmental Compliance**

(a) The Lessee shall not dispose of, release or discharge nor permit anyone to dispose of, release or discharge any Hazardous Substance on, or under the premises or into any ditch, conduit, stream, storm sewer, or sanitary sewer connected thereto or located at the Facility. Any Hazardous Substance disposed of, released or discharged by the Lessee (or permitted by the Lessee to be disposed of, released or discharged) on the premises or at the Facility, shall upon notice by the Port Authority to the Lessee and subject to the provisions of all Environmental Requirements be completely removed and/or remediated by the Lessee. The obligations of the Lessee pursuant to this paragraph shall survive the expiration or termination of this Agreement.

(b) Upon the expiration or earlier termination of the letting hereunder, the Lessee shall at its sole cost and expense, remove or permanently close all underground storage tanks and associated piping in compliance with all environmental requirements including the conduct of a site assessment and performance of any necessary cleanup or remedial action. The Lessee shall provide the Port Authority with copies of all records relating to any underground storage tanks that are required to be maintained by any applicable environmental requirements.

(c) Promptly upon any termination of the letting hereunder, or when required by any applicable federal, state, or local regulatory authority, the Lessee shall perform, at its sole cost and expense, an environmental site assessment reasonably acceptable to the Port Authority to determine the event, if any, of contamination of the premises and shall, at its sole cost and expense, clean up, remove, and remediate (i) all Hazardous Substances in, on, or under the premises, (ii) any petroleum in, on, or under the premises in excess of allowable levels, and (iii) all contaminants and pollutants in, on, or under the premises that create or threaten to create a substantial threat to human health or the environment and that are required to be removed, cleaned up, or remediated by any and all applicable environmental requirements.

(d) The Lessee shall indemnify and save harmless the Port Authority from and against any and all liabilities, damages, suits, penalties, judgments, and environmental cleanup, removal, response, assessment, or remediation cost arising from contamination of the premises or release of any Hazardous Substance, pollutant, contaminant or petroleum in, on, or under the premises. The Lessee shall indemnify and save the Port Authority harmless from and against any and all loss of rentals or decrease in property values arising from Lessee's breach of paragraph (a) of this Section.

Section 60. **Security Deposit**

Upon the execution of this Agreement by the Lessee and delivery thereof to the Port Authority, the Lessee shall deposit with the Port Authority (and shall keep deposited throughout the term of this Agreement, the sum of One Hundred Thousand Dollars and No Cents ($100,000.00) either in cash, or bonds of the United States of America, or of the State of New York or of the State of New Jersey, or of the Port Authority of New York and New Jersey,

having a market value of that amount, as security for the full, faithful and prompt performance of and compliance with, on the part of the Lessee, all of the provisions, terms, covenants and conditions of the Agreement on its part to be fulfilled, kept, performed or observed and as security for the payment of all other rentals, fees, charges and obligations owed or which may become due and owing to the Port Authority arising from the Lessee's operations at the Airport, whether covered by a written agreement or otherwise. Bonds qualifying for deposit hereunder shall be in bearer form but if bonds of that issue were offered only in registered form, then the Lessee may deposit such bond or bonds in registered form, provided, however, that the Port Authority shall be under no obligation to accept such deposit of a bond in registered form unless such bond has been reregistered in the name of the Port Authority (the expense of such re-registration to be borne by the Lessee) in a manner satisfactory to the Port Authority. The Lessee may request the Port Authority to accept a registered bond in the Lessee's name and if acceptable to the Port Authority the Lessee shall deposit such bond together with a bond power (and such other instruments or other documents as the Port Authority may require) in form and substance satisfactory to the Port Authority. In the event the deposit is returned to the Lessee, any expenses incurred by the Port Authority in re-registering a bond to the name of the Lessee shall be borne by the Lessee. In addition to any and all other remedies available to it, the Port Authority shall have the right, at its option, at any time and from time to time, with or without notice to use the said deposit or any part thereof in whole or partial satisfaction of any of its claims or demands against the Lessee. There shall be no obligation on the Port Authority to exercise such right and neither the existence of such right nor the holding of the deposit itself shall cure any default or breach of the Agreement on the part of the Lessee. In the event that the Port Authority shall at any time or times so use the deposit, or any part thereof, or if bonds shall have been deposited and the market value thereof shall have declined below the above-mentioned amount, the Lessee shall, on demand of the Port Authority and within two (2) days thereafter, deposit with the Port Authority additional cash or bonds so as to maintain the deposit at all times to the full amount above stated, and such additional deposits shall be subject to all the conditions of this Section. After the expiration or earlier termination of the Agreement as the same may have been extended and upon condition that the Lessee shall then be in no wise in default under any part of the Agreement, as this Agreement may have been amended or extended (or both), and upon written request therefor by the Lessee, the Port Authority will return the said deposit to the Lessee less the amount of any and all unpaid claims and demands (including estimated damages) of the Port Authority by reason of any default or breach by the Lessee of the Agreement or any part thereof and less any other fees, charges and obligations owed to the Port Authority arising from the Lessee's operations at the Airport. The Lessee agrees that it will not assign or encumber the said deposit and any such assignment or encumbrances shall be void as to the Port Authority. The Lessee may collect or receive annually any interest or income earned on bonds and interest paid on cash deposited in interest bearing bank accounts less any part thereof or amount which the Port Authority is or may hereafter be entitled or authorized by law to retain or to charge in connection therewith, whether as or in lieu of administrative expense or custodial charge, or otherwise, provided, however, that the Port Authority shall not be obligated by this provision to place or to keep cash deposited hereunder in interest bearing bank accounts. Without limiting the foregoing provisions of this Section, with respect to any bonds deposited by the Lessee, the Port Authority shall have the right, in order to satisfy any of its claims or demands against the Lessee, to sell the same in whole or in part, at any time and from time to time, with or without prior notice, at public or private sale, all as determined by the Port

Authority together with the right to purchase the same at such sale free of any claims, equities or rights of redemption of the Lessee. The Lessee hereby waives all right to participate therein and all right to prior notice or demand of the amount or amounts of the Port Authority's claims or demands against the Lessee. The proceeds of any such sale shall be applied by the Port Authority first to the costs and expenses of the sale (including but not limited to any advertising or commission expenses) and then to the amounts due the Port Authority from the Lessee.. Any balance remaining shall be retained in cash toward bringing the security deposit to the sum specified above provided that this shall not relieve the Lessee from maintaining the deposit in the full amount stated above.

(b) The Lessee may at any time during the effective term of the letting under this Agreement offer to deliver to the Port Authority, as security for all obligations of the Lessee under this Agreement, a clean irrevocable letter of credit issued by a banking institution satisfactory to the Port Authority and having its main office within the Port of New York District, in favor of the Port Authority in the amount of One Hundred Thousand Dollars and No Cents ($100,000.00).

The form and terms of such letter of credit, as well as the institution issuing it, shall be subject to the prior and continuing approval of the Port Authority. Such letter of credit shall provide that it shall continue throughout the effective term of the letting under this Agreement and for a period of not less than six (6) months thereafter; such continuance may be by provision for automatic renewal or by substitution of a subsequent satisfactory letter. Upon notice of cancellation of a letter of credit, the Lessee agrees that unless, by a date twenty (20) days prior to the effective date of cancellation, the letter of credit is replaced by security in accordance with paragraph (a) of this Section or another letter of credit satisfactory to the Port Authority, the Port Authority may draw down the full amount thereof and thereafter the Port Authority will hold the same as security under paragraph (a) of this Section. Failure to provide such a letter of credit at any time during the effective period of the permission, under this Agreement, valid and available to the Port Authority, including any failure of any banking institution issuing any such letter of credit previously accepted by the Port Authority to make one or more payments as may be provided in such letter of credit shall be deemed to be a breach of this Agreement on the part of the Lessee. Upon acceptance of such letter of credit by the Port Authority, and upon request by the Lessee made thereafter, the Port Authority will return the security deposit, if any, theretofore made under and in accordance with the provisions of paragraph (a) of this Section. The Lessee shall have the same rights to receive such deposit during the existence of a valid letter of credit, as it would have to receive such sum upon expiration of the permission under this Agreement and fulfillment of the obligations of the Lessee hereunder. If the Port Authority shall make any drawing under a letter of credit held by the Port Authority hereunder, the Lessee on demand of the Port Authority and within two (2) days thereafter, shall bring the letter of credit back up to its full amount.

(c) For purposes of the foregoing, the Lessee hereby certifies that its I.R.S. Federal Tax Identification No. is

Section 61. <u>Books and Records</u>

In addition to and without limiting the provisions of the Section of this Agreement entitled "Definitions" hereof or any term or provision of this Agreement, the Lessee shall keep in

an office or offices in the Port of New York District, appropriate books and records showing (i) all matters with respect to the costs of the construction work; (ii) all matters which the Lessee is required to certify to the Port Authority pursuant to this Lease and (iii) any and all other matters concerning the Lessee's operations at the Airport with respect to which the Port Authority may reasonably need information to fulfill its obligations or exercise its rights under this Lease whether or not of the type enumerated above in this Section and whether or not an express obligation to keep books and records with regard thereto is expressly set forth elsewhere in this Lease. The Lessee shall not be obligated to preserve any such records for more than seven (7) years after the receipt of revenues or occurrences of charges or expenses hereunder unless they are material to litigation initiated within that time, in which event they shall be preserved until the final determination of the controversy. The Port Authority shall have the right to audit and inspect such books and records during regular business hours.

Section 62. Other Agreements

The Lessee shall not, by virtue of the execution of this Agreement, be released or discharged from any obligations or liabilities whatsoever under any other agreements with the Port Authority.

Section 63. Operating Names

(a) Any name, designation or any service mark proposed to be used or displayed at the premises or for the Lessee's operations therein shall be approved in advance in writing by the Port Authority and the Lessee shall have the right to use and display the name, designation or mark only so long as this Agreement is in force and effect. If for any reason the Lessee ceases its operations in the premises, the Lessee's right to use such name, designation or service mark shall immediately cease and come to an end and the Port Authority or its designee shall have the sole right to use such name, designation or service mark and the Lessee hereby consents to such use thereof. Any registration or filing by the Lessee with respect to such name, designation or service marks shall indicate the Port Authority's interest therein and the form thereof shall be approved in advance by the Port Authority in writing. The Lessee agrees to assign and transfer to the Port Authority any such registration or filing and any other rights in or to the use of such name, designation or service mark promptly upon written request therefor from the Port Authority.

Nothing herein contained is intended to apply to the continuing use by the Lessee of its customary name, designation or service mark used elsewhere in its operations prior to its making of this Agreement.

Section 64. Space Licenses

Notwithstanding the provisions of paragraphs (b) and (d) of the Section of this Agreement entitled "Assignment and Sublease", the Lessee may license a third person to operate

the multi-fuel vehicle service station and towing service at the premises pursuant to the provisions of Section 3 of this Agreement provided, however, that:

(1) the proposed licensee, its Chief Operating Officer, or the employee chiefly responsible for the operations being conducted on the premises shall have an established record and more than three (3) years' experience in the operation of a multi-fuel vehicle service station similar in size to that described herein, and including the operation of a natural gas fueling station and towing service, and shall have adequate and experienced staff and management personnel to give full time attention to the operation in the premises of the proposed service station in accordance with all the terms and conditions of this Agreement and to fulfill all of the Lessee's obligations with respect to such concession under this Agreement throughout the term of the letting hereunder; and

(2) the proposed licensee shall have the same obligation as the Lessee has as to the use of the premises which shall be in accordance with the purposes set forth in Section 3 of this Agreement, and the proposed licensee shall use the area for no other purpose whatsoever; and

(3) the proposed licensee, and each officer, director or partner thereof, and each person, firm or corporation having an outright or beneficial interest in twenty percent (20%) or more of the monies invested in the proposed licensee, if the proposed licensee is a corporation or partnership, by loans thereto, stock ownership therein, or any other form of financial interest, has as of the date of the proposed license agreement a good reputation for integrity and financial responsibility and has not been convicted or nor is under current indictment for any crime and is not currently involved in civil anti-trust or fraud litigation, or any proceedings indicative of a lack of business integrity; and

(4) neither the proposed licensee nor any officer, director, or partner thereof, nor any person, firm or corporation having an outright or beneficial interest in twenty percent (20%) or more of the monies invested in the proposed licensee, if the proposed licensee is a corporation or partnership, by loans thereto, stock ownership therein, or any other form of financial interest is in conflict of interest, as defined under the laws of the State of New York with any Commissioner of the Port Authority as of the date of the proposed assignment;

(5) the Port Authority shall not have had any unfavorable experience with the proposed licensee, or any of its officers, directors, or partners, or any person, firm or corporation having an outright or beneficial interest in twenty percent (20%) or more of the monies invested in the proposed licensee, if such licensee is a corporation or partnership, by loans thereto, stock ownership therein or any other form of financial interest; and

(6) neither the proposed licensee, nor any officer, director or partner thereof, nor any person firm or corporation having an outright or beneficial

interest in twenty percent (20%) or more of the monies invested in the proposed licensee, if the proposed licensee is a corporation or partnership, by loans thereto, stock ownership therein, or any other form of financial interest has filed a voluntary petition in bankruptcy or has been adjudicated a bankrupt within five years prior to the date of the proposed license agreement; and

provided, further, however, that no such license agreement shall be effective until an agreement in the form annexed hereto as "Exhibit Z" has been executed by the Port Authority, the Lessee and the proposed licensee. The Port Authority agrees to execute such agreement provided that the proposed licensee fulfills the requirements and conditions set forth in subdivisions (4) through (6) of this Section. The agreement between the Lessee and the licensee shall be made expressly subject to the terms and provisions of this Agreement, and each licensee shall comply with all of the terms and provisions of this Agreement applicable to the premises and shall use and occupy the premises as though such licensee were the Lessee hereunder. The Lessee understands that notwithstanding the retention of third persons to operate the multi-fuel service station hereunder, the Lessee shall remain fully liable for the performance of all of the terms and provisions of this Agreement, and for securing compliance therewith by its licensee. All acts and omissions of the Lessee's licensee shall be deemed acts or omissions of the Lessee. In spite of any effort by the Lessee to secure compliance with all of the terms and provisions of this Agreement by its licensee, any breach or violation of the terms and provisions of this Agreement by the licensee shall be deemed a breach or violation of this Agreement by the Lessee, and in such event the Port Authority shall have all rights or remedies consequent upon such breach or default as are reserved to it by this Agreement, and, subject to all notice requirements as are set forth herein, the provisions of this Agreement relating to default and termination shall apply as if the licensee were the Lessee hereunder. For the purpose of computing the percentage and variable rentals payable by the Lessee hereunder, all monies, payments or fees paid or payable to the Lessee by its licensee in connection with the licensee's operations in the premises (including all monies, payments or fees described in the applicable license agreements between the Lessee and its licensee other than reimbursements of rentals, including, without limitation, percentage and variable rentals, and other charges payable by the Lessee to the Port Authority pursuant to the terms of this Agreement) and all gross receipts arising out of the operations of such licensee in the premises shall be deemed to be gross receipts of the Lessee, shall be included in the gross receipts of the Lessee hereunder, and shall be subject to the percentage rental payable hereunder.

Section 65. Certain Environmental Testing and Clean-up Obligations

(a) (1) Attached hereto, hereby made a part hereof is an exhibit marked "Exhibit M" which consists of a "Newark Liberty International Airport, Proposed Service Station, Environmental Subsurface Baseline Investigation, Final Report, dated July 2006" including its appendices and compilation of reports and tests results of subsurface soil and groundwater samples taken on various dates as set forth in Exhibit M from a total of ten (10) soil borings setting forth the levels of PP + 40 (Priority Pollutant plus 40 compounds), including total xylenes, methyl tertiary butyl ether (MTBE), total petroleum hydrocarbon (TPHC), and tert-butyl alcohol (TBA), all as more specifically named and set forth in Exhibit M.

(2) All of the aforesaid items for which the said samples were tested as set forth in Exhibit M ("Exhibit M") are hereinafter referred to as the "Analyzed Items."

(3) The Port Authority hereby represents to the Lessee and the Lessee acknowledges and agrees that the aforesaid Exhibit M as attached hereto contains and sets forth tests results and a report of subsurface environmental investigations performed at the Premises by or on behalf of the Port Authority prior to the execution of this Lease and for purposes of establishing the Initial Existing Condition as hereinafter defined.

(4) Further, the Lessee may, subject to the terms and conditions of Section 6 hereof and subject to the coordination requirements of subparagraph (b) (4) below, take other samples from various locations on the Premises selected by the Lessee and agreed to by the Port Authority which shall be analyzed by qualified personnel of an independent laboratory, mutually acceptable to the Port Authority and the Lessee, in accordance with State and Federal laws, ordinances, rules, regulations, requirements, orders or directions for petroleum and/or hazardous substance characterization and the results thereof shall be set forth in a report prepared by such laboratory and upon delivery of such report and tests results to the Port Authority, such report and test results shall become part of Exhibit M and of the Current Remediation, as hereinafter defined, on condition and provided that: (i) the said sampling and testing were done in accordance with a methodology approved by the Port Authority; (ii) no part of such test results nor any such report shall become part of Exhibit M or of the Initial Existing Condition or of the Current Remediation unless all such samples, test results and the report are completed prior to the Completion Date, as hereinbefore defined in Section 6 hereof; (iii) that should such test results and report list contaminants not now set forth in Exhibit M as attached hereto on the execution date of this Lease or indicate a higher level of any of the Analyzed Items set forth in said Exhibit M then such contaminant or contaminants and such higher level or higher levels shall become part of Exhibit M only if the Lessee proves to the reasonable satisfaction of the Port Authority that such contaminant or contaminants and such higher level or higher levels existed in the Premises prior to the effective date of this Lease and provided, further, that such contaminant or contaminants and such higher level or higher levels were not caused by or did not result from any act or omission of the Lessee or of any of its agents, contractors or representatives; it being expressly understood and agreed that any such newly discovered contaminant or contaminants and such higher level or higher levels not so made a part of Exhibit M shall be included within the Lessee's sole responsibilities for contaminants and remediation at the Premises under paragraph (c) hereof.

(5) The said reports and tests results set forth in Exhibit M (including any supplemental reports and test results as may be called for under paragraph (b) hereof) for the purposes of this Lease, the levels of the Analyzed Items in the soil and upper aquifer in the Premises at the commencement of the term of the letting hereunder and are herein called the "Initial Existing Condition," and said reports and tests results produced in connection therewith and, together with the results of any subsequent reports and tests which may be made supplemental to or which may supersede those in Exhibit M or of the applicable portions thereof as provided for in paragraph (d) below as applied by the aforesaid methodology to all portions of the Premises, are, for purposes of this Lease, hereinafter called the "Existing Condition," provided, however, in no event shall the level of any Analyzed Item in any Existing Condition be

above the lower of (i) the level of such Analyzed Item as set forth in the Initial Existing Condition, or (ii) the lowest level to which such Analyzed Item has been remediated to as shown in a succeeding Existing Condition.

(b) (1) It is hereby recognized by the parties hereto that as a result of the reporting of the Initial Existing Condition to the New York State Department of Environmental Conservation (hereinafter called the "DEC") the DEC may require remediation of the Initial Existing Condition including all appropriate borings and wells required for said remediation (which remediation is herein called the "Current Remediation") and that the Port Authority and the DEC are currently undertaking discussions to establish a level to which each of the Analyzed Items in the ground water and soil in the Premises must be remediated by the Current Remediation (which level or levels as established for each of the Analyzed Items is hereinafter called a "Clean-Up Level"). It is understood and agreed solely with respect to and solely during and for the period of the Lessee's performance of the Construction Work under Section 6 hereof, that said Current Remediation shall, as between the Lessee and the Port Authority, be deemed to include the remediation as may be required by the DEC of any contaminant or contaminants discovered by the Port Authority during the performance of the Current Remediation or by the Lessee during the performance of the Construction Work and not now set forth in Exhibit M, provided, however, that such contaminant or contaminants are determined by the Port Authority to have been existing in the Premises prior to the effective date of this Lease and provided, further, that such contaminant or contaminants were not caused by or did not result from any act or omission of the Lessee or of any of its agents, contractors or representatives; and Exhibit M shall be supplemented to include the reports and test results of any such newly discovered contaminant or contaminants so included in the Current Remediation in accordance with the foregoing; it being expressly understood and agreed that any such newly discovered contaminant or contaminants not so made a part of the Current Remediation shall be deemed included within the Lessee's sole responsibilities for contaminant(s) and remediation at the Premises under paragraph (c) hereof. Neither the provisions of this Section 65 nor any reference herein to the DEC or to the Port Authority's Current Remediation or to any governmental agency which may succeed to the DEC shall or shall be construed as any consent by the Port Authority to the jurisdiction of such agency over the Port Authority or its operations at the Airport or any waiver of any Port Authority position or policy with respect thereto.

(2) The Port Authority hereby recognizes that the Lessee may be performing the Construction Work, or portions thereof as the case may be, under Section 6 hereof concurrently with the performance of the Current Remediation and the Lessee hereby likewise recognizes that the performance of the Current Remediation may occur concurrently with the Lessee's performance of the Construction Work. The Port Authority agrees to consult with the Lessee in the scheduling of the Current Remediation so as to provide minimum interference with the Lessee's scheduling of the Construction Work and the Lessee likewise agrees to consult with the Port Authority in the Lessee's scheduling of the Construction Work, subject to the requirements of the DEC for the Current Remediation, so as to provide minimum interference with the Current Remediation.

(3) As between the Lessee and the Port Authority, and based on the Lessee's comprehensive plan and design of the Construction Work under Section 6 hereof, as

and when approved by the Port Authority and as further described in and subject to paragraph (c) below, the Lessee shall not be responsible for the Current Remediation, except that the Lessee shall be responsible for any and all increased expenses including without limitation all costs and expenses relating thereto necessary, required, or appropriate as a result of, caused by, incidental to or triggered by any change in the said Lessee's comprehensive plan or any change in the design, method or scope of the Construction Work required under Section 6 hereof unless such change had theretofore received the prior review and the written approval of the Port Authority including the Port Authority's written consent in a writing signed by the Port Authority's Director of Aviation to the impact of such change on the Current Remediation (which remediation costs and expenses for which the Lessee is so responsible is hereinafter called the "Lessee's Incremental Costs of the Current Remediation").

(4) Without limiting the generality of any provision of the Lease, in the event that any applicable governmental or regulatory environmental requirements set forth more than one compliance standard, the Port Authority and the Lessee agree that the standard or standards to be applied in connection with any obligation they each may have under the Lease with respect to environmental requirements shall be that which requires or permits the lowest level of a hazardous substance; provided, however, in the event that, after the completion of the Current Remediation, such lowest level of hazardous substance requires or allows the imposition of any restriction of any nature whatsoever upon the use or occupancy of the Premises or any other portion of the Facility or upon any operations or activities conducted or to be conducted on the Premises or the Facility, then the Lessee shall remediate and clean up to such a level so that there is no such restriction placed upon the use and occupancy of the Premises or the Facility or upon any operations or activities conducted or to be constructed on the Premises or the Facility.

(5) The Lessee further agrees that, the Port Authority shall have the right at any time and from time to time, acting in its sole discretion and without any obligation whatsoever to the Lessee or otherwise to do so, to designate any level or levels or standard or standards of remediation or cleanup permitted or required under any such environmental requirements, and such designation shall be binding upon the Lessee with respect to its obligations under the Lease with respect to such environmental requirements.

(c) Without limiting the generality of paragraph (b) hereof or any other term or provision of the Lease, the Lessee agrees to accept the Premises "as is" and, except as set forth in subparagraphs (1) through (6) below, to be solely responsible for any and all contaminants, and any and all soil and ground water or other contamination and remediation thereof, in and on the Premises, including without limitation, all costs and expenses thereof (including, without limitation the Lessee's Incremental Costs of the Current Remediation) and any and all claims, penalties or other expenses relating thereto. It is expressly understood and agreed that the proper handling, delivery, treatment, storage, transportation, disposal and depositing (all of the foregoing being hereinafter collectively called "Disposal"), whether on or off the Airport, of any soil, dirt, sand, water or other matter excavated, disturbed or removed by the Lessee (or by any contractor or contractors of the Lessee) at or from the Premises (or any other area of the Airport) at any time or times including, without limitation, any and all Disposal of such matter in connection with the performance of the Construction Work and any and all remediation and Disposal of such matter and any and all other remediation, Disposal and cleanup (whether soil,

upper aquifer or otherwise) necessary, required or appropriate as a result of, caused by, incidental to or triggered by such excavation, disturbance or removal of such matter or arising therefrom, and the taking or doing of any and all other action or actions necessary, required or appropriate in connection therewith, and in accordance with all Environmental Requirements, shall be the sole and complete responsibility of the Lessee including, without limitation, all costs and expenses thereof and any and all claims, penalties or other expenses relating thereto. The foregoing obligations of the Lessee shall obtain and apply with full force and effect irrespective of the nature or source of any contaminant, pollutant, chemical, waste or other substance or whether any of the same is an Analyzed Item or whether any of the same is at a level or levels above or below the level or levels of the Existing Condition or whether there has or has not been any increase in such level or levels. The Lessee shall perform all of the foregoing in accordance with and subject to all the terms, provisions, covenants and conditions of the Lease. Notwithstanding any other provision hereof to the contrary, the Lessee shall not be responsible for the following remediation of and contamination in and on the Premises:

(1) the Current Remediation except for the Lessee's Incremental Costs of the Current Remediation;

(2) contamination of soil and ground water caused by the acts and omissions of the Port Authority;

(3) remediation (exclusive of the Lessee's Incremental Costs of the Current Remediation) of the Existing Condition required solely by the DEC (or such other applicable governmental agency, if any, succeeding to the DEC and which has jurisdiction over the operations of the Port Authority at the Airport or with whose governmental requirements the Port Authority has agreed to conform) lowering below the Clean-Up Level for an Analyzed Item the level the DEC will accept on the Premises of such Analyzed Item;

(4) contamination caused solely by the flow of ground water or the leaching of soil from outside the Premises;

(5) contamination and contaminants existing in or on the Premises prior to the effective date of this Lease which are discovered subsequent to the establishment of the Existing Condition and are not listed in Exhibit M and the remediation thereof; except that the Lessee shall be solely responsible for such contamination and contaminants and the remediation thereof if (i) the Lessee is not able to or does not establish or prove to the satisfaction of the Port Authority that such contamination and contaminants in fact existed in or on the Premises prior to the effective date of this Lease, or (ii) if any such contamination or contaminants were caused by or resulted from any act or omission of the Lessee or of any of its agents, contractors or representatives;

(6) remediation of soil which is excavated by the Lessee in order for it to perform the Construction Work pursuant to and under Section 6 hereof and during the course of the Construction Work under Section 6 hereof and which soil is not used at the Site (as defined in Section 1 hereof); provided that (i) the Lessee shall deliver such soil at its sole expense to an on or off Airport location as designated by the Port Authority, (ii) the contaminant

or contaminants in such soil were not caused by or did not result from any act or omission of the Lessee, and (iii) the Lessee is able to prove to the satisfaction of the Port Authority that such contaminant or contaminants, if not listed in Exhibit M, in fact existed in the Premises prior to the effective date of the Lease.

(d) Without limiting the generality of the provisions of Section 22 of this Lease, the Port Authority and its designees shall have the right but not the obligation to enter upon the Premises upon forty-eight (48) hours' notice (or such shorter notice period as may be required by the DEC or such other governmental agency or agencies as described above) to the Lessee to conduct testing and related activities from the wells made by borings referred to in paragraph (a) above, to make additional borings and wells and to conduct testing and related activities therefrom, and to perform such activities as shall be necessary to perform the Current Remediation as and to the extent set forth in paragraph (b) above and to otherwise remediate the Existing Condition to the extent the Lessee is not required to do so by this Section 65, including but not limited to, conducting pumping from the wells made by borings referred to in paragraph (a) above and in this paragraph (d). In the exercise of the foregoing rights the Port Authority shall not unreasonably interfere with the use and occupancy of the Premises by the Lessee.

(e) If after any remediation performed on the Premises, whether by the Lessee, the Port Authority or a third party(ies), the Port Authority shall sample and test the soil and/or aquifer of the Premises or portions thereof and shall set forth the results of such samplings and tests in a report (it being understood however that the Port Authority shall not have any obligation to perform such sampling, testing or to set forth such results in a report), upon delivery of such report and test results to the Lessee, such report and test results shall supersede and replace Exhibit M or the applicable portions thereof if the test results and reports are of Analyzed Items which have been previously tested and the results thereof reported in Exhibit M from the same well or boring or a new well or boring which is immediately adjacent to such well or boring and shall supplement Exhibit M or the applicable portions thereof if the test results and reports would not supersede any test results and reports in Exhibit M as aforesaid, and the said results of such report setting forth the levels of the Analyzed Items in the soil and upper aquifer of the Premises together with those portions of Exhibit M which have not been replaced shall thereafter upon such delivery thereafter to the Lessee be and be deemed to be the "Existing Condition" under this Section 65; provided, however, and notwithstanding the foregoing, and subject to and in accordance with this Section, in no event shall the level of any Analyzed Item in any Existing Condition be above the level for such Analyzed Item as set forth in the Initial Existing Condition or the lowest level to which such Analyzed Item has been remediated.

(f) Without limiting the generality of the provisions of Section 12 of the Lease, the Lessee agrees to protect and maintain the wells made by the borings referred to in paragraph (a) above and shall repair any damage thereto not caused by the activities of the Port Authority or its designees, if any, pursuant to paragraphs (e) above. If in connection with the Construction Work under Section 6 hereof it is necessary to fill any of the said wells, then, provided that such filling is permitted or approved by the Port Authority and provided that the Current Remediation may in the determination of the Port Authority proceed with a replacement well or wells, the Lessee shall perform all work (other than the filling of the well or wells) necessary or required for a replacement well or wells in accordance with the terms and

provisions of the Lease and the related Construction Application(s) to be submitted by the Lessee covering such work in accordance with Section 6 hereof, as the same may be approved by the Port Authority, and, further, the Lessee hereby agrees that all costs and expenses for and in connection with the drilling of a new well or wells to replace the filled well or wells shall be borne solely by the Lessee without any reimbursement from the Port Authority. The obligation of the Lessee to protect and maintain the wells as set forth in the first sentence of this paragraph (f) shall be deemed to also pertain and apply to any and all such replacement wells.

(g) The terms and conditions of this Section are intended to allocate obligations and responsibilities between the Lessee and the Port Authority. Nothing in this Section 65shall limit, modify or otherwise alter the rights and remedies which the Port Authority or Lessee may have against third parties at law, equity or otherwise.

Section 66. **Official Inspection Station**

(a) The Lessee is hereby granted permission to maintain a New Jersey State official inspection station for motor vehicles. The Lessee shall, during the entire period it conducts such official inspection station, maintain in effect, licenses, certificates or other authorization required to conduct motor vehicle inspections and shall comply with all governmental requirements governing the same. The permission granted herein shall in no way constitute the Lessee an agent of the State of New Jersey for the purpose of conducting such official inspection or constitute the necessary governmental authorization to conduct the same.

(b) It is hereby expressly understood that the permission granted above for the operation of an official inspection station is subject to revocation at any time, without cause, upon thirty (30) days' prior written notice from the Port Authority to the Lessee and the Lessee shall cease use from and after the effective date of any such notice. Revocation hereunder shall not affect any of the other terms and provisions of the Lease which shall continue in full force and effect.

Section 67. **Phase 1A Roadway Work**

(a) The parties hereby acknowledge that the Port Authority is performing a certain landside access construction project at the Airport consisting generally of the following portions: a) the construction of certain roadway improvements at the Airport's principal roadway entrance; b) the construction of an inbound ramp connecting the I-78 Connector to Brewster Road and a corresponding ramp to facilitate outbound movements of traffic; c) the construction of roads to connect Monorail Stations "D2" and "E" to adjacent Airport roads, and drop-off/pick-up facilities at said Stations; d) an expansion of the Central Terminal Area Complex recirculation road; and e) other roadway improvements related thereto; all of the foregoing portions being hereinafter collectively called the "Phase 1A Roadway Work".

(b) (l) For purposes of this Lease, the term "Phase 1A Costs" shall mean the total costs in connection with all portions of the Phase 1A Roadway Work, which shall be the total of

the following costs as such costs are incurred in the performance of each portion of the Phase 1A Roadway Work.

A. Construction Costs:

(1) payments to independent contractors, vendors and suppliers;
(2) premiums or charges for Performance Bonds;
(3) insurance premiums or charges;
(4) direct payroll and expenses of Port Authority employees and agents engaged in performance or supervision of the work, charged in accordance with Port Authority accounting practice.

B. Engineering Services:

(1) payments to independent consultants and engineering firms;
(2) direct payroll and expenses of Port Authority staff arising in connection with the work, charged in accordance with Port Authority accounting practice.

C. Other direct costs charged in accordance with Port Authority accounting practice.

D. Liquidated overhead in lieu of the Port Authority's administration and overhead costs in the amount of ten percent (10%) of the sum of all other elements of cost included in the Port Authority's net total cost (including Financial Expenses in 'E' below).

E. Financial Expenses on the foregoing computed in accordance with Port Authority accounting practice.

(2) "Phase 1A Charge Commencement Date" shall mean the date on which the Port Authority shall have certified that the construction of any portion of the Phase 1A Roadways has been substantially completed, provided, however, if any such date shall occur on other than the first day of a calendar month, the Phase 1A Charge Commencement Date shall mean the first (1st) day of the first (1st) full calendar month immediately following the month during which the said date occurs.

(3) (i) "The Phase 1A Factor" shall mean the sum of (l) the respective averages of the annual capital investment recovery rates of the "25-Bond Revenue Index" appearing in the respective last issues of "The Bond Buyer" published during each of the respective calendar years commencing on January 1, 1992 for which each such average will be applied, plus (2) one hundred fifty (150) basis points.

(ii) In the event that "The Bond Buyer" or its "25-Bond Revenue Index" shall be discontinued prior to the date on which the Port Authority determines the Phase 1A Factor, then the Port Authority shall by notice to the Lessee propose a comparable substitute for such Index for all subsequent periods as aforesaid. The determination of the Port Authority as to such substitute shall be final.

(4) The "Phase 1A Charge Period" or "Phase 1A Charge Periods" shall mean the period or periods, as the case may be, commencing on the applicable Phase 1A Charge Commencement Date and ending on the day immediately preceding the twenty-fifth (25th) anniversary of said Phase 1A Charge Commencement Date.

(5) For purposes of the calculations under this Section 55, "PFC Funds" shall mean revenues derived from fees (hereinafter called "Passenger Facility Charges") charged air passengers at the Airport, a portion of which revenues, as available, shall be applied to the Phase 1A Costs in accordance with Port Authority applications therefor as approved by the Federal Aviation Administration, the amount of which PFC Funds to be applied to the Phase 1A Costs being limited in amount to a total of Fifty Million Dollars and No Cents ($50,000,000.00).

(c) (1) For any period from the applicable Phase 1A Commencement Date through the 31st day of December of the year in which the said date occurs (all such periods, for purposes of this Section 55, being hereinafter referred to individually as a "Phase IA Period"), the Port Authority shall establish and the Lessee shall pay a Phase IA Charge, as follows:

(i) The Port Authority shall determine the portion of the total Phase IA Costs paid or incurred by the Port Authority up to and including the day immediately preceding the said Phase 1A Commencement Date, each such portion being hereinafter referred to as the "Phase 1A Investment".

(ii) The Port Authority shall deduct from the first and each subsequent Phase 1A Investment determined in subsubparagraph (i) above the amount of PFC Funds available to be applied to the Phase 1A Costs until the amount of available PFC Funds is exhausted, the remainder and each such portion thereafter being hereinafter referred to as the "Net Phase 1A Investment".

(iii) The Port Authority shall estimate an amount (each such amount being hereinafter referred to as the "Annual Phase 1A Capital Cost") equal to even monthly payments derived by multiplying the applicable Net Phase 1A Investment by a monthly multiplier derived in accordance herewith from time to time by the application of the following formula:

$$\frac{1}{\frac{1}{i} - \frac{1}{i(1+i)^t}} = \text{Monthly Multiplier}$$

Where i equals the Phase 1A Factor (as estimated by the Port Authority) divided by twelve.

Where t (a power) equals 300.

(iv) The Port Authority shall determine the Total Developed Land Square Feet on the Airport, as defined in Section 44 of the Lease, for the calendar year immediately preceding the applicable Phase 1A Commencement Date, shall convert the same to acres, and shall divide the applicable Annual Phase 1A Capital Cost by said Total as converted to acres, the quotient thereof being hereinafter referred to as the "Phase 1A Charge Per Acre".

(v) The Port Authority shall multiply the total developed land area at the Airport by 0.____%, or the percentage then in effect, which percentage constitutes the portion of said total occupied by the Lessee hereunder, the product thereof being hereinafter referred to as the "Lessee's Terminal Acreage".

(vi) The Port Authority shall multiply the applicable Lessee's Terminal Acreage by the applicable Phase IA Charge Per Acre, the product thereof being herein referred to as the "Phase 1A Charge".

(2) At the time the Port Authority advises the Lessee of the final Airport Services Factor for the calendar year during which any respective Phase 1A Period occurs, the Port Authority shall also advise the Lessee of the applicable Phase 1A Charge, which shall be the amount due and payable by the Lessee to the Port Authority for each calendar month during the applicable Phase 1A Period and for each and every month in the calendar year during which the Phase 1A Charge is calculated. The Lessee shall pay the accumulated total thereof for each month of the applicable Phase 1A Period and for the months that have elapsed since the end of the applicable Phase 1A Period at the time it pays the tentative Airport Services Factor for the calendar month following the month during which the applicable Phase 1A Charge is calculated. The Lessee shall continue to make payments based on the said Phase 1A Charge until the same is further adjusted based upon actual costs incurred in the performance of the Phase 1A Roadway Work, as provided in subparagraph (3) hereof.

(3) After the close of calendar year 1996 and after the close of each calendar year thereafter up to and including the calendar year during which the Phase 1A Roadway Work is completed, the Port Authority will adjust, if necessary, the applicable Phase 1A Charge, as follows:

(i) The Port Authority shall determine the portion of the total Phase 1A Costs paid or incurred by the Port Authority during the calendar year for which the adjustment is being made for any portion of the Phase 1A Work certified as complete and operational, each such portion being hereinafter referred to as the "Final Phase 1A Investment".

(ii) The Port Authority shall determine an amount (each such amount being hereinafter referred to as the "Final Annual Capital Cost") equal to even monthly payments derived by multiplying the applicable Final Phase 1A Investment by a monthly multiplier derived in accordance herewith from time to time by the application of the following formula:

$$\frac{1}{\frac{1}{i} - \frac{1}{i(1+i)^t}} = \text{Monthly Multiplier}$$

Where i equals the Phase 1A Factor (as estimated by the Port Authority) divided by twelve.

Where t (a power) equals 300.

(iii) The Port Authority shall determine the final Phase 1A Charge Per Acre in the manner set forth in item (iv) of sub subparagraph (c)(l) hereof.

(iv) The Port Authority shall determine the final Lessee's Terminal Acreage in the manner set forth in item (v) of sub subparagraph (c)(l) hereof.

(v) The Port Authority shall determine the final Phase 1A Charge in the manner set forth is item (vi) of sub subparagraph (c)(l) hereof.

(4) At the time the Port Authority advises the Lessee of the final Airport Services Factor for the calendar year for which the said determination is being made, the Port Authority shall also advise the Lessee of the final Phase 1A Charge, which shall be the amount due and payable by the Lessee to the Port Authority for each calendar month during the calendar year for which the said determination is being made and for each and every month thereafter during the remainder of the Phase 1A Charge Period. The Lessee shall pay the said Phase 1A Charge at the time it pays the tentative Airport Services Factor for the calendar month following the month during which the said Phase 1A Charge is calculated and shall continue to make payments based on the said Phase 1A Charge at the time it pays each Airport Services Factor during the remainder of the Phase 1A Charge Period.

(5) In the event that the Port Authority shall determine that it expended in the cost of any portion of the Phase 1A Roadway Work amounts as set forth in subsubparagraph (b)(1) hereof which total more or which total less than the applicable Phase 1A Costs in effect on the day immediately preceding the applicable Phase 1A Charge Commencement Date up to the time of such determination or at any time after the determination of any final Phase 1A Charge then, (x) if more was expended, within thirty (30) days after demand of the Port Authority, the Lessee shall pay to the Port Authority an amount equal to the difference between the amounts expended by the Port Authority as so determined by the Port Authority and, (y) if less was expended, the Port Authority shall credit to the Lessee an amount equal to the difference between the amounts expended by the Port Authority as so determined by the Port Authority and, in each case, the aforesaid Phase 1A Costs or such final Phase 1A Charge, as the case may be, in effect on the day immediately preceding the applicable Phase 1A Charge Commencement Date or the day immediately preceding the end of the calendar year for which such final Phase 1A Charge is

calculated, and, effective from and after such date of such payment or credit, the applicable Phase 1A Costs for purposes of subparagraph (c) hereof shall be increased or decreased, as the case may be, by the amount of such payment or credit and the applicable Phase 1A Charge payable by the Lessee adjusted appropriately hereunder.

(6) Any deficiency in the amounts due to the Port Authority from the Lessee for any calendar year resulting from the adjustment of any Phase IA Charge shall be paid to the Port Authority by the Lessee within thirty (30) days after demand therefor and any excess payments made by the Lessee determined on the basis of an adjusted Phase IA Charge shall be credited against future rentals, such credit to be made within thirty (30) days following the adjustment of the applicable Phase IA Charge, as the case may be.

Section 68. **Entire Agreement**

This Agreement consists of the following: Sections 1 through 68 and Exhibit A, B, M and Z and Schedules A, E, F and X. It constitutes the entire agreement of the parties on the subject matter hereof and may not be changed, modified, discharged or extended except by written instrument duly executed by the Port Authority and the Lessee. The Lessee agrees that no representations or warranties shall be binding upon the Port Authority unless expressed in writing in this Agreement.

IN WITNESS WHEREOF, the parties hereto have executed these presents as of the day and year first above written.

ATTEST:

Secretary

THE PORT AUTHORITY OF NEW YORK AND NEW JERSEY

By DAVID KAGAN

(Title) ASSISTANT DIRECTOR

(Seal)

WITNESS:

GAZ REALTY, INC.
d/b/a **NEWARK AIRPORT PLAZA INC.**

By George Abi Zeid

(Title) President

Corporate Seal)

APPROVED:
FORM | TERMS

EXHIBIT B

PERFORMANCE AND PAYMENT BOND

KNOW ALL MEN BY THESE PRESENTS that we, the undersigned* Contractor and surety company (or companies), as principal and surety (or sureties), respectively,

Contractor **Surety**

are hereby held and firmly bound unto The Port Authority of New York and New Jersey (herein called the "Authority") in the penal sum of _____ Dollars and _____ Cents ($ _____.), for the payment of which, well and truly to be made, we hereby jointly and severally bind ourselves, our heirs, representatives, executors, administrators, successors and assigns. Each surety, however, if there is more than one, shall be jointly and severally liable for said penal sum.

Signed this _____ day of _____ 2008

The condition of the above obligation is that

WHEREAS, the above named principal has entered into a Contract in writing with the Authority, a copy of which is hereby made a part of this bond as though herein set forth in full and which is designated Contract ,
and

WHEREAS, the Authority has required this bond for the faithful performance of all obligations imposed by said Contract and also for the payment of all lawful claims of subcontractors, materialmen and workmen arising out of the performance of said Contract;

NOW, if the said principal shall well and faithfully do and perform the things agreed by him to be done and performed according to the terms and true intent and meaning of said Contract and if all lawful claims of subcontractors, materialmen and workmen arising out of the performance of said Contract are paid, then this obligation shall be void, otherwise the same shall remain in full force and effect; it being expressly understood and agreed that, provided the sureties shall comply with the provisions hereof, the aggregate liability of all sureties for any and all claims hereunder shall in no event exceed the penal amount of this obligation as hereinbefore stated.

This undertaking is for the benefit the Authority and all subcontractors, materialmen and workmen having lawful claims arising out of the performance of said Contract, and all such subcontractors, materialmen and workmen (as well as the Authority itself) shall have a direct right of action upon this bond; but the rights and equities of such subcontractors, materialmen and workmen shall be subject and subordinate to those of the Authority.

The sureties, for value received, hereby stipulate and agree that the obligations of said sureties and their bond shall be in no way impaired or affected by any extensions of time, modification, omission, addition or change in or to the said Contract or the construction to be performed thereunder, or by any supervision or inspection or omission to supervise or inspect the construction, or by any payment thereunder before the time required therein, or by any waiver of any provision or condition thereof (whether precedent or subsequent), or by any assignment, subletting or other transfer thereof or of any part thereof or of any construction to be performed or any moneys due or to become due thereunder; and said sureties do hereby waive notice of any and all of such extensions, modifications, omissions, additions, changes, payments, waivers, assignments, subcontracts and transfers, and hereby expressly stipulate and agree that any and all things done and omitted to be done by and in relation to assignees, subcontractors and other transferees shall have the same effect as to said sureties as though done by or in relation to said principal.

The sureties shall give the General Counsel of the Authority the following notices:

A. Written notice of an intent to pay any claim of a subcontractor, materialman or workman hereunder;

B. Written notice within five days of the institution of an action by a subcontractor, materialman or workman hereunder.

The sureties shall not pay the claim of any subcontractor, materialman or workman hereunder until the expiration of thirty days after receipt by said General Counsel of notice under either subparagraph A or B above, describing the claim to be paid.

IN WITNESS WHEREOF, the principal and the sureties have hereunto set their hands and seals, and such of them as are corporations have caused their corporate seals to be hereto affixed and these presents to be signed by their proper officers, the day and year first set forth above.

_____

Principal

(Seal)

By_____

_____

Surety

By _____

APPROVED AS TO ACCEPTABILITY OF SURETIES:

_____

Credit Manager _____2008

ACKNOWLEDGMENT OF PRINCIPAL, IF A CORPORATION

State of _____
_____ SS:
County of _____

On this _____. day of _____, 2008, before me personally came and appeared _____, to me known, who being by me duly sworn, did depose and say that he resides at _____; that he is the _____. of _____ the corporation described in and which executed the foregoing instrument; that he knows the seal of said corporation; that one of the seals affixed to said instrument is such seal; that it was so affixed by order of the directors of said corporation, and that he signed his name thereto by like order.

(Seal) _____.

ACKNOWLEDGMENT OF PRINCIPAL, IF A PARTNERSHIP

State of _____
_____ SS:
County of _____

On this _____. day of _____, 2008, before me personally came and appeared _____, to me known, and known to me to be one of the members of the firm of _____ described in and who executed the foregoing instrument and he acknowledged to me that he executed the same as and for the act and deed of said firm.

(Seal) _____.

ACKNOWLEDGMENT OF PRINCIPAL, IF AN INDIVIDUAL

State of _____
_____ SS:
County of _____

On this _____ day of _____, 20 , before me personally came and appeared _____, to me known and known to me to be the person described in and who executed the foregoing instrument and he acknowledged to me that he executed the same.

(Seal) _____

AFFIX ACKNOWLEDGMENT AND JUSTIFICATION OF SURETY

PERFORMANCE AND PAYMENT BOND

* If the Authority shall in its sole discretion so elect at the time of accepting the Contractor's Proposal, the Contractor shall require the general contractor(s) to which the Contractor subcontracts the construction portion of the Contract to furnish a bond for the faithful performance of all construction obligations imposed upon such general contractor(s) pursuant to such subcontract(s). Such bond, if so required, shall be in such form and sum as are required by the Authority (not to exceed that portion of the Contract constituting construction) and such bond shall be signed by one or more sureties satisfactory to the Authority.

At any time after the opening of Proposals, the Authority may give notice to one or more proposers to advise the Authority as to the names of their proposed sureties. Within forty-eight hours thereafter each proposer so notified shall so advise the Authority. The giving of such notice to a proposer shall not be construed as an acceptance of his Proposal, and omission to give such notice shall not be construed as an election by the Authority not to require a bond.

If the Authority elects to require the foregoing bond from the general contractor(s), the Contractor shall deliver such bond to the Authority within fifteen (15) business days after the execution and delivery by the general contractor(s) of the subcontract(s) with the Contractor, but in no event later than thirty (30) days following receipt by the Contractor of the acceptance of his Proposal, and Proposal, and the sureties thereon shall be as proposed by him provided, that if the Authority has theretofore given notice to him that his proposed sureties or any of them are not satisfactory, the bond shall be executed by other sureties satisfactory to the Authority.

The Authority shall give notice to the Contractor within ten (10) days after receipt of the foregoing bond as to whether or not such bond is satisfactory.

In the event of a default by the Contractor in his obligation to furnish a satisfactory bond on behalf of his general contractor within the time period referenced above, such default shall entitle the Authority in its discretion to terminate this Contract at any time within forty-five (45) days after the acceptance of the Proposal, without any liability on the part of the Authority. Inasmuch as the damages to the Authority resulting from a termination by it upon the failure of the Contractor to furnish a satisfactory bond will include items whose accurate amount will be difficult or impossible to compute, such damages shall be liquidated in the sum of the following amounts:

A. The excess, if any, of the Estimated Total Contract Price in the Proposal finally accepted over that in the Proposal of the Contractor; and

B. The expense of such new advertisement of the Contract, if any, as may be deemed necessary by the Authority; and

C. The sum of $500 for each day after the receipt by the Contractor of the acceptance of his Proposal that the performance of the Contract is not commenced by reason of the failure of the Contractor to furnish the required bond.

In the recovery of the damages above specified, the Authority may proceed against the sum represented by the certified check deposited with it or against the Bid Bond and take such other action, as it may deem best in the public interest.

If the Contractor furnishes a bond in accordance with the requirements of the Authority under this numbered clause, the Authority shall reimburse the Contractor for the net amount actually paid by him to the surety or sureties as the premium on such bond. The Contractor shall deliver to the Engineer receipts from the surety or sureties evidencing such payment and the amount thereof. Within fifteen days after receipt of such evidence satisfactory to the Engineer, the Authority shall pay to the Contractor by check the amount provided in this numbered clause.

If at any time the Authority shall be or become dissatisfied with any surety or sureties then upon any bond furnished in accordance with the requirements of the Authority, or if for any other reason such bond shall cease to be adequate security to the Authority, the Contractor shall, within fifteen (15) business days after notice from the Authority so to do, substitute a new bond in such form and sum and signed by such other sureties as may be necessary in the opinion of the Authority to constitute adequate security.

THIS AGREEMENT SHALL NOT BE BINDING UPON THE PORT AUTHORITY UNTIL DULY EXECUTED BY AN EXECUTIVE OFFICER THEREOF AND DELIVERED TO THE LESSEE AND LICENSEE BY AN AUTHORIZED REPRESENTATIVE OF THE PORT AUTHORITY

Lease No. –
Newark Liberty Airport

CONSENT TO LICENSE AGREEMENT

THIS AGREEMENT, made as of 20 , by and among THE PORT AUTHORITY OF NEW YORK AND NEW JERSEY (hereinafter called "the Port Authority), a body corporate and politic, created by Compact between the States of New Jersey and New York, with the consent of the Congress of the United States of America and having an office at 225 Park Avenue South, in the Borough of Manhattan, City, County and State of New York, and

(hereinafter called "the Lessee") and

(hereinafter called the "Licensee") a corporation organized and existing under the laws of having an office at

, whose representative is

WITNESSETH, That:

WHEREAS, the Port Authority and the Lessee have heretofore entered into an agreement of lease identified above by Port Authority Lease Number (which agreement of lease, dated as of , 20 , as the same may have been supplemented and amended, is hereinafter called "the Lease") covering premises at Newark Liberty Airport (hereinafter referred to as "the Airport"); and

WHEREAS, pursuant to the applicable provisions of the Lease, the Lessee and the Licensee have entered into a license agreement, a copy of which is attached hereto and made a part hereof (hereinafter called "the License Agreement") granting permission to the Licensee to use and occupy all or a portion of the premises under the Lease (such portion being hereinafter referred to as "the licensed premises") to operate a multi-fuel vehicle service station and towing service and the Lessee has requested the consent of the Port Authority to the Lessee entering into the License Agreement; and

WHEREAS, the Port Authority is willing to consent thereto on certain terms and conditions as hereinafter set forth;

NOW, THEREFORE, for and in consideration of the covenants and mutual agreements herein contained, the Port Authority, the Lessee and the Licensee hereby agree as follows:

1. On the terms and conditions hereinafter set forth, the Port Authority consents to the License Agreement.

2. Notwithstanding any provision of the License Agreement to the contrary, both this Consent and the License Agreement shall terminate, without notice to the Lessee or the Licensee, on the day preceding the earliest to occur of the dates of expiration, revocation or earlier termination of the Lease, or on the date of the expiration or earlier termination of the License Agreement, on the effective date of any revocation of this Consent by the Port Authority or on such earlier date as the Lessee and the Licensee may agree upon. The Licensee shall cease its use and occupancy of the licensed premises and shall quit such area and remove its property and property for which it is responsible therefrom on or before the expiration or earlier revocation or termination of the period of the permission granted with respect to the use thereof.

3. If the Lessee shall at any time be in default under the Lease, the Licensee shall on demand of the Port Authority pay directly to the Port Authority any rental, fee or other amount due to the Lessee. No such payment shall relieve the Lessee from any obligation under the Lease or under this Consent or affect the Port Authority's rights and remedies thereunder, but all such payments shall be credited against the obligations of the Lessee or of the Licensee, as the Port Authority may determine for each payment or part thereof.

4. In any case of any difference between the provisions of the Lease or this Consent and those of the License Agreement, the provisions of the Lease or of this Consent, as the case may be, shall be controlling, it being the intention of the Port Authority merely to permit the exercise of the Lessee's rights (to the extent permitted by the License Agreement and this Consent) by the Licensee and not to enlarge or otherwise change the rights granted by the Lease. All of the terms, provisions, covenants and conditions of the Lease shall be and remain in full force and effect. No alterations to the licensed premises shall be made under the License Agreement or otherwise without the prior written approval of the Port Authority.

5. Neither this Consent nor anything contained herein nor the consent granted hereunder shall constitute or be deemed to constitute a consent to, nor shall they create an inference or implication that there has been consent to, any enlargement, variation or change in the rights and privileges granted to the Lessee under the Lease, nor consent to the granting or conferring any rights, powers or privileges to the Licensee as may be provided by the License Agreement if not granted to the Lessee under the Lease, nor shall they impair or affect any of the duties, liabilities and obligations imposed on the Lessee under the Lease. The License Agreement is an agreement between the Lessee and the Licensee with respect to the various matters set forth therein. Neither this Consent nor anything contained herein nor the consent granted hereunder shall constitute an agreement between the Port Authority and the Lessee that the provisions of the License Agreement shall apply and pertain as between the Lessee and the Port Authority, it being understood that the terms, provisions, conditions and agreements of the Lease shall, in all respects, be controlling, effective and determinative. The specific mention of or reference to the Port Authority in any part of the License Agreement, including without limitation thereto any mention of any consent or approval of the Port Authority now or hereafter to be obtained, shall not be or be deemed to create an inference that the Port Authority has granted its consent or approval thereto under this Consent or shall hereafter grant its consent or approval thereto or that the subject matter as to which the consent or approval applies has been or shall be approved or consented to in principle or in fact or that the Port Authority's discretion as to granting any such consents or approvals shall in any way be affected or impaired. The lack of any specific reference in any provision of the License Agreement to Port Authority approval or consent shall not be deemed to imply that no such approval or consent is required.

No provisions of the License Agreement, including but not limited to those imposing obligations on the Licensee with respect to laws, rules, regulations, taxes, assessments and liens, shall be construed as a submission or admission by the Port Authority that the same could or does lawfully apply to the Port Authority, nor shall the existence of any provision of the License Agreement covering action which may be undertaken by the Lessee or the Licensee including but not limited to those involving signs, construction, insurance, assignment and subletting, be deemed to imply or infer that Port Authority consent or approval thereto has or will be given or that Port Authority discretion with respect thereto will in any way be affected or impaired. References in this Paragraph to specific matters and provisions as contained in the License Agreement shall not be construed as indicating any limitation upon the rights of the Port Authority with respect to its discretion as to granting or withholding approvals or consents as to other matters and provisions in the License Agreement which are not specifically referred to herein.

6. The Licensee, in its operations under or in connection with the License Agreement and its use of the licensed premises, agrees to assume, observe, be bound by and comply with all the terms, provisions, covenants and conditions of the Lease. Without limiting the generality of the foregoing, the Licensee shall use the licensed premises as a multi-fuel vehicle service station and towing service and for no other purpose whatsoever.

7. (a) Without in any wise affecting the obligations of the Lessee under the Lease and under this Consent and notwithstanding the terms and provisions of the License Agreement, the Licensee shall make repairs and replacements as if it were the Lessee under the Lease. In addition, the Licensee shall indemnify and hold harmless the Port Authority, its Commissioners, officers, employees and representatives from and against (and shall reimburse the Port Authority for its costs and expenses including attorney's fees and other legal expenses incurred in connection with the defense of) all claims and demands of third persons including but not limited to claims and demands for death, for personal injuries and for property damages, arising out of a breach or default of any term or provision of this Consent by the Licensee or out of its operations under the License Agreement or at the licensed premises, or out of the use or occupancy of the licensed premises by the Licensee or by others with its consent, or out of any other acts or omissions of the Licensee, its officers, employees, agents, representatives, contractors, customers, guests, invitees and others who are doing business with the Licensee at the licensed premises, or out of any other acts or omissions of the Licensee, its officers and employees at the Airport, including claims and demands of the City of Newark (hereinafter "the City") from which the Port Authority derives its right in the Airport, for indemnification, arising by operation of law or pursuant to the Basic Lease (as defined in the Lease) whereby the Port Authority has agreed to indemnify the City against claims. However, all acts and omissions of the Licensee shall be deemed to be acts and omissions of the Lessee under the Lease and the Lessee shall also be severally responsible therefor, including but not limited to the obligations of indemnification, repair and replacement.

(b) If so directed, the Licensee shall at its own expense defend any suit based upon any such claim or demand (even if such suit, claim or demand is groundless, false or fraudulent), and in handling such it shall not, without obtaining express advance permission from the General Counsel of the Port Authority, raise any defense involving in any way the jurisdiction of the tribunal over the person of the Port Authority, the immunity of the Port Authority, its

Commissioners, officers, agents or employees, the governmental nature of the Port Authority, or the provisions of any statutes respecting suits against the Port Authority.

(c) In addition to the insurance required to be maintained by the Lessee under the Lease, the Licensee during the period the License Agreement shall remain in effect shall in its own name as insured and including the Port Authority, the Lessee and the City as additional insureds obtain, maintain and pay the premiums on a policy or policies of commercial general liability insurance, including, but not limited to products liability, premises-operations and completed operations, and covering bodily injury, including death, and property damage liability, and garage liability (with automobile hazard 2 coverage), garage keepers legal liability, none of the foregoing to contain care, custody or control exclusions (endorsed to include all risks of physical loss and damage including lift collision coverage and collision upset coverage in limits sufficient to cover vehicles and other property in the care, custody and control of the Lessee), and comprehensive automobile liability insurance covering owned. non-owned and hired vehicles, and including automatic coverage for newly-acquired vehicles, and all applicable requirements for underground storage tanks including the Federal Financial Responsibility Requirements, in limits not less than $2,000,000 combined single limit per occurrence for bodily injury and property damage liability. Such policy or policies shall include Environmental Impairment Liability insurance coverage in limits not less than $2,000,000 combined single limit per occurrence. All the aforesaid policy or policies of insurance shall also provide or contain an endorsement providing that the protections afforded the Licensee thereunder with respect to any claim or action against the Licensee by a third person shall pertain and apply with like effect with respect to any claim or action against the Licensee by the Port Authority, the Lessee, the City or any two or all of them, but such endorsement shall not limit, vary, change or affect the protections afforded the Port Authority, the Lessee and the City as additional insureds. In addition, the insurance required hereunder shall provide or contain an endorsement providing that the protections afforded the Port Authority, the Lessee, the City or any two or all of them, thereunder as additional insureds with respect to any claim or action against the Port Authority or the Lessee, or both, by the Licensee shall be the same as the protections afforded the Licensee thereunder with respect to any claim or action against the Licensee by a third person as if the Port Authority and the Lessee were the named insureds thereunder. Further, the said policy or policies of insurance shall also provide or contain a contractual liability endorsement covering the obligations assumed by the Licensee under subparagraphs (a) and (b) hereof.

Without limiting the provisions hereof, in the event the Licensee maintains the foregoing insurance in limits greater than aforesaid the Port Authority shall be included therein as an additional insured to the full extent of all such insurance in accordance with all the terms and provisions hereof.

All insurance coverages and policies required under this Paragraph may be reviewed by the Port Authority for adequacy of terms, conditions and limits of coverage at any time and from time to time during the period the License Agreement remains in effect. The Port Authority at any such time may make additions, deletions, amendments to or modifications of the above-scheduled insurance requirements, including an increase in such minimum limits, and may require such other and additional insurance, in such amounts or against such other insurable hazards, as the Port Authority may deem advisable and the Licensee shall promptly comply therewith.

(d) As to the insurance required by the provisions of this Paragraph, a certified copy of the policies or a certificate or certificates or binders satisfactory to the Port Authority evidencing the existence thereof, shall be delivered by the Lessee to the Port Authority within fifteen (15) days after delivery of this Consent to the Port Authority. Each policy, certificate or binder delivered as aforesaid shall bear the endorsement of or be accompanied by evidence of payment of the premium thereon. In the event a binder is delivered, it shall be replaced within thirty (30) days by a certified copy of the policy or a certificate. Each such copy or certificate shall contain a valid provision or endorsement, unqualifiedly committing the insurer not to cancel, terminate, change or modify the policy without giving thirty (30) days' written advance notice thereof to the Port Authority. Each such copy or certificate shall contain an additional endorsement providing that the insurance carrier shall not, without obtaining express advance permission from the General Counsel of the Port Authority, raise any defense involving in any way the jurisdiction of the tribunal over the person of the Port Authority, the immunity of the Port Authority, its Commissioners, officers, agents or employees, the governmental nature of the Port Authority or the provisions of any statutes respecting suits against the Port Authority. Any renewal policy shall be delivered to the Port Authority at least thirty (30) days prior to the expiration of each expiring policy, except for any policy expiring after the date of expiration of the License Agreement. The aforesaid insurance shall be written by a company or companies approved by the Port Authority. If at any time any of the insurance policies shall be or become unsatisfactory to the Port Authority as to form or substance or if any of the carriers issuing such policies shall be or become unsatisfactory to the Port Authority, the Licensee shall promptly obtain a new and satisfactory policy in replacement thereof. If the Port Authority at any time so requests, a certified copy of each of the policies shall be delivered to the Port Authority.

8. (a) The Licensee agrees that it will conduct a first-class operation, will furnish all fixtures, equipment, personnel (including licensed personnel as necessary or as required by law), supplies, materials and other facilities and replacements necessary or proper therefor and shall maintain its fixtures, equipment and personal property in the licensed premises in first-class operating order, condition and appearance at all times, making all repairs and replacements necessary therefor, regardless of the cause of the condition necessitating any such repair or replacement.

(b) Nothing herein contained shall relieve the Lessee of its obligations to secure the Port Authority's written approval before permitting the Licensee to install any fixtures in or upon or making any alterations, decorations, additions or improvements in the licensed premises.

9. The Licensee shall daily remove from the Airport by means of facilities provided by the Licensee all garbage, debris and other waste material arising out of or in connection with its operations.

10. This Agreement and the consent granted hereunder may be revoked at any time by the Port Authority without cause on thirty (30) days' notice to the Lessee and the Licensee and no such revocation shall be deemed to affect the Lease or the continuance thereof, but the permission granted the Licensee with respect to the use and occupancy of the licensed premises and the License Agreement shall be deemed terminated thereby and upon such termination the Lessee shall cause the Licensee to be removed from the licensed premises.

11. The granting of this Consent by the Port Authority shall not be deemed to operate as a waiver of the rights of the Port Authority, or of the requirement for consent to any subsequent license agreement (by the Lessee or by the Licensee) or to any assignment of the Lease, of the License Agreement or of any rights under either of them, whether in whole or in part.

12. References herein to the "*Lessee*" or the "*Licensee*" shall mean and include each of the Lessee and the Licensee, their respective officers, agents, employees and also others at the licensed premises or the Airport with the consent of either the Lessee or the Licensee.

13. The Lessee and the Licensee hereby represent to the Port Authority that they have complied with and will comply with all laws, governmental rules, regulations and orders which as a matter of law are applicable to or which affect the operations of the Lessee and the Licensee under the Lease or its or their use of the licensed premises. The obligation of the Lessee and the Licensee hereunder to comply with governmental requirements is provided herein for the purpose of assuring proper safeguards for the protection of persons and property. Such provision is not to be construed as a submission by the Port Authority to the application to itself of such requirements or any of them.

14. The Licensee assures that it will undertake an affirmative action program as required by 14 CFR Part 152, Subpart E to insure that no person shall on the grounds of race, creed, color, national origin, or sex be excluded from participating in any employment activities covered in 14 CFR Part 152, Subpart E. The Licensee assures that no person shall be excluded on these grounds from participating in or receiving the services or benefits of any program or activity covered by such subpart. The Licensee assures that it will require that its covered suborganizations provide assurances to the Licensee that they similarly will undertake affirmative action programs and that they will require assurances from their suborganizations, as required by 14 CFR Part 152, Subpart E, to the same effect.

15. The License Agreement shall not be changed, modified or extended except by written instrument duly executed by the parties thereto and only with the express prior written consent of the Port Authority.

16. Neither the Commissioners of the Port Authority nor any of them, nor any officer, agent or employee thereof shall be held personally liable to the Lessee or to the Licensee under any term or provision of this Consent or because of its execution or because of any breach or alleged breach thereof.

IN WITNESS WHEREOF, the Port Authority, the Lessee and the Licensee have executed these presents.

ATTEST:

THE PORT AUTHORITY OF NEW YORK AND NEW JERSEY

_____
Secretary

By_____

Title_____
(Seal)

ATTEST:

_____
Secretary

By_____

Title_____President
(Corporate Seal)

ATTEST;

_____
Secretary

By_____

Title_____President
(Corporate Seal)

(Port Authority Acknowledgment)

STATE OF NEW YORK)
)ss.:
COUNTY OF NEW YORK)

On the day of in the year 20 before me, the undersigned, a Notary Public in and for said state, personally appeared
personally known to me or proved to me on the basis of satisfactory evidence to be the individual whose name is subscribed to the within instrument and acknowledged that he executed the same in his capacity as for
the Port Authority of New York and New Jersey, and that by his signature on the instrument, the individual, or the corporation upon behalf of which the individual acted, executed the instrument.

(Seal or Stamp) _____
(Signature of Notary Public)

(Permittee Acknowledgment)

STATE OF)
)ss.:
COUNTY OF)

On the day of in the year 200 before me, the undersigned, a Notary Public in and for said state, personally appeared
personally known to me or proved to me on the basis of satisfactory evidence to be the individual whose name is subscribed to the within instrument and acknowledged that he executed the same in his capacity as for
the Port Authority of New York and New Jersey, and that by his signature on the instrument, the individual, or the corporation upon behalf of which the individual acted, executed the instrument.

(Seal or Stamp) _____
(Signature of Notary Public)

(Licensee Acknowledgment)

STATE OF)
)ss::
COUNTY OF)

On the day of in the year 200 before me, the undersigned, a Notary Public in and for said state, personally appeared
personally known to me or proved to me on the basis of satisfactory evidence to be the individual whose name is subscribed to the within instrument and acknowledged that he executed the same in his capacity as for
the Port Authority of New York and New Jersey, and that by his signature on the instrument, the individual, or the corporation upon behalf of which the individual acted, executed the instrument.

(Seal or Stamp) _____
(Signature of Notary Public)

SCHEDULE A

The Lessee shall pay the rental at the rate stated in paragraph (a) of Section 4 of the Agreement to which this Schedule is attached (which Agreement is hereinafter sometimes called "the Lease"), until the said rate is adjusted as hereinafter provided. After the close of calendar year 1991 and after the close of each calendar year thereafter, the Port Authority will adjust the Airport Services Factor of the annual rate of rental specified in paragraph (a) of Section 4 of the Lease, upwards or downwards, as follows:

I. The Port Authority shall determine the total of the following major elements of costs actually incurred or accrued during the calendar year for which the adjustment is being made, in connection with Airport Services:

(a) Fixed charges on Port Authority investment in Airport Services.

(b) The Port Authority's cost of direct labor, materials, payments to contractors and suppliers and other costs for operation, maintenance, repairs and replacements charged directly to Airport Services, and the pro rata share of the cost of snow and ice removal; such costs, however, to exclude those charged to Port Authority non-revenue producing areas.

(c) The Port Authority's cost of direct labor, materials, payments to contractors and suppliers and other costs charged directly to Policing and Traffic functions at the Airport (whether performed by the Airport Police Section or such other Sections or other Port Authority organization unit or units as may hereafter perform the same or similar functions).

(d) The Port Authority's cost of labor, which was charged directly to the Airport Manager's Office (or such other Port Authority office or organization unit or units as may hereafter from time to time perform the same or similar functions).

II. The Port Authority shall also determine during the calendar year for which the adjustment is being made the percentage of total developed land area at the Airport occupied by the Lessee s premises.

III. The Port Authority will multiply the Airport Services Factor as stated in paragraph *(a)* of Section 4 of the Lease by a fraction the numerator of which shall be the total of the major elements of costs actually incurred or accrued as determined under Paragraph I, subparagraphs (a) through (d) above and the denominator of which shall be the total of the major elements of costs actually incurred or accrued as determined for the year prior to the year for which the adjustment is being made (for the calendar year 2007 adjustment, it is hereby agreed said denominator shall be $84,845,423); and the resulting product shall be multiplied by a fraction the numerator of which shall be the percentage determined in Paragraph II above and the denominator of which shall be the actual percentage of total developed land area occupied by the *Lessee's* premises determined *for the year prior to the year for which the adjustment* is being made (for the calendar year 2007 adjustment, it is hereby agreed said denominator shall be 0.078%).

IV. The resultant product shall constitute the final Airport Services Factor for the calendar year for which the adjustment is being made. It shall also constitute the tentative Airport Services Factor for the calendar year in which such factor is calculated. The final Airport Services Factor shall be the amount due and payable by the Lessee to the Port Authority for the calendar year so adjusted and for the months, which have elapsed since the end of that calendar year. The Lessee shall continue to make payments based on the new tentative Airport Services Factor until the same is further adjusted.

V. In the event more than one Airport Services Factor is in effect during the calendar year for reasons other than the adjustment pursuant to Paragraph IV hereof, the Port Authority will multiply each such Airport Services Factor by the fractions stated in Paragraph III above, except that the percentage to be used as the denominator of the second of the said fractions shall be the percentage in effect at the same time as each such Airport Services Factor is in effect.

VI. In the event more than one Airport Services Factor is in effect during a calendar year for reasons other than the adjustment pursuant to Paragraph IV hereof, resulting in more than one resultant product after the adjustments pursuant to Paragraph V hereof have been made, the resultant product of that adjustment involving the Airport Services Factor in effect at the end of the calendar year for which the adjustment is being made shall constitute the final Airport Services Factor for the portion of said calendar year during which said Airport Services Factor was in effect It shall also constitute the tentative Airport Services Factor for the calendar year in which such factor is calculated. All other resultant products shall each constitute the final Airport Services Factor for that portion of the calendar year for which the adjustment is being made during which the respective tentative Airport Services Factor was in effect.

VII. Any deficiency in the rentals and fees due to the Port Authority from the Lessee for any calendar year resulting from the adjustment of the Airport Services Factor of the rentals shall be paid to the Port Authority by the Lessee within thirty (30) days after demand thereof and any excess payments made by the Lessee determined on the basis of an adjusted Airport Services Factor shall be credited against future rentals or refunded to the Lessee if no future rentals shall be due under this Agreement, such credit or refund to be made within thirty (30) days following the adjustment of the Airport Services Factor.

VIII. The following terms, when used in the Lease, shall, unless the context shall require otherwise, have the respective meanings given below:

(a) "Airport Services" for the purpose of the Lease shall mean such systems, non-revenue producing areas, operations and functions as may be related to serving the Airport from time to time during the term of the letting including without limitation thereto, air terminal highways (as so designated by the Port Authority from time to time), communications and signals, storm and sanitary sewers, water distribution, and other systems designed to provide utilitarian services to Airport areas, restricted use service highways, non-revenue producing space in structures, facilities, areas or subdivisions thereof necessary to the operations of the Port Authority administrative, maintenance, policing and operations space.

(b) "Total Developed Land Square Feet on the Airport" shall mean all land within the Airport boundary as the same may be changed from time to time (exclusive, however, of land situated to the north and west of United States Routes 1-9) which is revenue-producing, including but not limited to, all land under lease or permit, land actually developed for a specific use and all land specifically designated as part of the Public Aircraft Facilities.

(c) "Port Authority Investment" as used for the computation of fixed charges shall consist of:

A. Construction costs

(1) payments to contractors and/or vendors and suppliers;

(2) premiums or charges for Performance Bonds;

(3) insurance premiums or charges;

(4) direct payroll and expenses of Port Authority forces engaged in performance or supervision of construction work, charged in accordance with Port Authority accounting practice.

B. Engineering Services

(1) payments to outside consultants and engineering firms;

(2) direct payroll and expenses of Port Authority staff, charged in accordance with Port Authority accounting practice.

C. Land acquisition costs and the cost of acquisition of any interest therein, including air rights whether by purchase, lease, condemnation or other taking for a purpose, use or otherwise.

D. Other direct costs charged in accordance with Port Authority accounting practice.

E. Liquidated overhead in lieu of the Port Authority's administration and overhead costs in the amount of ten percent (10%) of the sum of all other elements of cost included in Port Authority investment (including Financial Expense, "F" below).

F. Financial Expense on the foregoing computed in accordance with Port Authority accounting practice.

(d) "Fixed charges on Port Authority investment" shall mean amortization and interest on Port Authority investment in items completed subsequent to December 31, 1964. Such fixed charges shall be determined on the basis of an equal annual payment method. The interest factor used in determining the fixed charges for all of the foregoing shall be the weighted average coupon rate for the twelve months ending November 30 of each year, rounded to the nearest hundredth percent, on all long-term bonds outstanding, the proceeds of which were made available for construction at the Airport

(e) The symbol "%" and the words "percentum" and "percent" whenever used herein or in the Agreement shall be deemed to be used synonymously and interchangeably.

IX. The Port Authority and the Lessee hereby agree that the Phase 1A Costs, as defined in Section 67 of the Lease, shall not be included in any calculation under this Schedule A. All costs for construction, repair, maintenance, modification and operation of the Phase 1A Roadway not included in the Phase 1A Costs shall be included hereunder.

Initialled:

For the Port Authority

For the Lessee

SCHEDULE E

AFFIRMATIVE ACTION-EQUAL OPPORTUNITY---MINORITY BUSINESS ENTERPRISES ---WOMEN-OWNED BUSINESS ENTERPRISES REQUIREMENTS

Part I. Affirmative Action Guidelines - Equal Employment Opportunity

Without limiting any of the terms and conditions of the Lease between The Port Authority of New York and New Jersey (the "***Port Authority***") and **GAZ REALTY INC.** ("*the **Lessee***") under Lease No. ANB-862 (the "***Lease***"), the Lessee understands and agrees that it shall put into effect prior to the commencement of any construction work (including but not limited to any work under a Tenant Alteration Application) an affirmative action program and Minority Business Enterprise (MBE) program and Women-owned Business Enterprise (WBE) program in accordance with the provisions of this Schedule E. As used in this Schedule E the term "***construction work***" shall be deemed to include also any and all construction work and/or alteration work under each Tenant Alteration Application. The provisions of this Schedule E shall be applicable to the Lessee's contractor or contractors and subcontractors at any tier of construction as well as to the Lessee itself and the Lessee shall include the provisions of this Schedule E within all of its construction contracts so as to make said provisions and undertakings the direct obligation of the construction contractor or contractors and subcontractors at any tier of construction. The Lessee shall and shall require its said contractor, contractors and subcontractors to furnish to the Port Authority such data, including but not limited to compliance reports relating to the operation and implementation of the affirmative action, Minority Business Enterprise (MBE) and Women-owned Business Enterprise (WBE) programs called for hereunder as the Port Authority may request at any time and from time to time regarding the affirmative action, Minority Business Enterprises (MBE) and Women-owned Business Enterprises (WBE) programs of the Lessee and its contractor, contractors, and subcontractors at any tier of construction, and the Lessee shall and shall also require that its contractor, contractors and subcontractors at any tier of construction make and put into effect such modifications and additions thereto as may be directed by the Port Authority pursuant to the provisions hereof and this Schedule E to effectuate the goals of affirmative action and Minority Business Enterprise (MBE) and Women-owned Business Enterprise (WBE) programs.

In addition to and without limiting any terms and conditions of the Lease, the Lessee shall provide in its contracts and all subcontracts covering the construction work or any portion thereof, that:

(aa) The contractor shall not discriminate against employees and applicants for employment because of race, creed, color, national origin, sex, age, disability or marital status, and shall undertake or continue existing programs of affirmative action to ensure that minority group persons are afforded equal employment opportunity without

discrimination. Such programs shall include, but not be limited to, recruitment, employment; job assignment, promotion, upgrading, demotion, transfer, layoff, termination, rates of pay or other forms of compensation, and selections for training or retraining, including apprenticeships and on-the-job training;

(bb) At the request of either the Port Authority or the Lessee, the contractor shall request such employment agency, labor union, or authorized representative of workers with which it has a collective bargaining or other Letter Agreement or understanding and which is involved in the performance of the contract with the Lessee to furnish a written statement that such employment agency, labor union or representative shall not discriminate because of race, creed, color, national origin, sex, age, disability or marital status and that such union or representative will cooperate in the implementation of the contractor's obligations hereunder;

(cc) The contractor will state, in all solicitations or advertisements for employees placed by or on behalf of the contractor in the performance of the contract, that all qualified applicants will be afforded equal employment opportunity without discrimination because of race, creed, color, national origin, sex, age, disability or marital status;

(dd) The contractor will include the provisions of subparagraphs (aa) through (cc) of this paragraph in every subcontract or purchase order in such a manner that such provisions will be binding upon each subcontractor or vendor as to its work in connection with the contract;

(ee) 'Contractor' as used herein shall include each contractor and subcontractor at any tier of construction.

I. As a matter of policy the Port Authority hereby requires the Lessee and the Lessee shall require the Contractor, as hereinafter defined, to comply with all of the provisions of this Schedule E, the foregoing provisions set forth above and the provisions set forth hereinafter in this Schedule E. The provisions set forth in this Part I are similar to the conditions for bidding on federal government contract adopted by the Office of Federal Contract Compliance and effective May 8, 1978.

The Lessee as well as each bidder, contractor and subcontractor of the Lessee and each subcontractor of a contractor at any tier of construction (herein collectively referred to as "the Contractor") must fully comply with the following conditions set forth herein as to each construction trade to be used on the construction work or any portion thereof (said conditions being herein called "Bid Conditions"). The Lessee hereby commits itself to the goals for minority and female utilization set forth below and all other requirements, terms and conditions of the Bid Conditions. The Lessee shall likewise require the Contractor to commit itself to the said goals for minority and female utilization set forth below and all other requirements, terms and conditions of the Bid Conditions by

submitting a properly signed bid.

II. The Lessee and the Contractor shall each appoint an executive of its company to assume the responsibility for the implementation of the requirements, terms and conditions of the following Bid Conditions:

(a) The goals for minority and female participation expressed in percentage terms for the Contractor's aggregate workforce in each trade on all construction work are as follows:

(1)	Minority participation	
	Minority, except laborers	30%
	Minority, laborers	40%
(2)	Female participation	
	Female, except laborers	6.9%
	Female, laborers	6.9%

These goals are applicable to all the Contractor's construction work performed in and for the premises.

The Contractor's specific affirmative action obligations required herein of minority and female employment and training must be substantially uniform throughout the length of the contract, and in each trade, and the Contractor shall make good faith efforts to employ minorities and women evenly on each of its projects. The transfer of minority or female employees or trainees from contractor to contractor or from project to project for the sole purpose of meeting the Contractor's goals shall be a violation of the contract. Compliance with the goals will be measured against the total work hours performed.

(b) The Contractor shall provide written notification to the Lessee and the Lessee shall provide written notification to the Manager of the Office of Business and Job Opportunity of the Port Authority within 10 working days of award of any construction subcontract in excess of $10,000 at any tier for construction work. The notification shall list the name, address and telephone number of the subcontractor; employer identification number; estimated starting and completion dates of the subcontract; and the geographical area in which the subcontract is to be performed.

(c) As used in these specifications:

(1) "Employer identification number" means the Federal Social Security number used on the Employer's Quarterly Federal Tax Return, U.S. Treasury Department Form 941:

(2) "Minority" includes:

(i) Black (all persons having origins in any of the Black African racial groups not of Hispanic origin);

(ii) Hispanic (all persons of Mexican, Puerto Rican, Dominican, Cuban, Central or South American culture or origin, regardless of race);

(iii) Asian and Pacific Islander (all persons having origins in any of the original peoples of the Far East, Southeast Asia, the Indian Subcontinent, or the Pacific Islands); and

(iv) American Indian or Alaskan Native (all persons having origins in any of the original peoples of North America and maintaining identifiable tribal affiliations through membership and participation or community identification).

(d) Whenever the Contractor, or any subcontractor at any tier, subcontracts a portion of the construction work involving any construction trade, it shall physically include in each subcontract in excess of $10,000 those provisions which include the applicable goals for minority and female participation.

(e) The Contractor shall implement the specific affirmative action standards provided in subparagraphs (1) through (16) of Paragraph (h) hereof. The goals set forth above are expressed as percentages of the total hours of employment and training of minority and female utilization the Contractor should reasonably be able to achieve in each construction trade in which it has employees in the premises. The Contractor is expected to make substantially uniform progress toward its goals in each craft during the period specified.

(f) Neither the provisions of any collective bargaining agreement, nor the failure by a union with whom the Contractor has a collective bargaining agreement, to refer either minorities or women shall excuse the Contractor's obligations hereunder.

(g) In order for the nonworking training hours of apprentices and trainees to be counted in meeting the goals, such apprentices and trainees must be employed by the Contractor during the training period, and the Contractor must have made a commitment to employ the apprentices and trainees at the completion of their training subject to the availability of employment opportunities. Trainees must be trained pursuant to training programs approved by the U.S. Department of Labor.

(h) The Contractor shall take specific affirmative actions to ensure equal employment opportunity ("EEO").

The evaluation of the Contractor's compliance with these provisions shall be based upon its good faith efforts to achieve maximum results from its actions. The Contractor shall document these efforts fully, and shall implement affirmative action

steps at least as extensive as the following:

(1) Ensure and maintain a working environment free of harassment, intimidation, and coercion at all Sites, and in all facilities at which the Contractor's employees are assigned to work. The Contractor, where possible, will assign two or more women to each Phase of the construction project. The Contractor, shall specifically ensure that all foremen, superintendents, and other supervisory personnel at the premises are aware of and carry out the Contractor's obligation to maintain such a working environment, with specific attention to minority or female individuals working at the premises.

(2) Establish and maintain a current list of minority and female recruitment sources, provide written notification to minority and female recruitment sources and to community organizations when the Contractor or its unions have employment opportunities available, and maintain a record of the organizations' responses.

(3) Maintain a current file of the names, addresses and telephone number of each minority and female off-the-street applicant and minority or female referral from a union, a recruitment source or community organization and of what action was taken with respect to each such individual. If such individual was sent to the union hiring hall for referral and was not referred back to the Contractor by union or, if referred, not employed by the Contractor, this shall be documented in the file with the reason therefor, along with whatever additional actions the Contractor may have taken.

(4) Provide immediate written notification to the Lessee when the union or unions with which the Contractor has a collective bargaining agreement has not referred to the Contractor a minority person or woman sent by the Contractor, or when the Contractor has other information that the union referral process has impeded the Contractor's efforts to meet its obligations.

(5) Develop on-the-job training opportunities and/or participate in training programs for the area which expressly include minorities and women, including upgrading programs and apprenticeship and training programs relevant to the Contractor's employment needs, especially those programs funded or approved by the Department of Labor. The Contractor shall provide notice of these programs to the sources compiled under subparagraph (2) above.

(6) Disseminate the Contractor's EEO Policy by providing notice of the policy to unions and training programs and requesting their cooperation in assisting the Contractor in meeting its EEO obligations; by including it in any policy manual and collective bargaining agreement; by publicizing it in the Contractor's newspaper, annual report, etc.; by specific review of the policy with all management personnel and with all minority and female employees at least once a year; and by posting the Contractor's EEO policy on bulletin boards accessible to all employees at each location where construction work is performed.

(7) Review, at least every six months the Contractor's EEO policy and affirmative action obligations hereunder with all employees having any responsibility for hiring, assignment, layoff, termination or other employment decision including specific review of these items with on-premises supervisory personnel such as Superintendents, General Foremen, etc., prior to the initiation of construction work at the premises. A written record shall be made and maintained identifying the time and place of these meetings, persons attending, subject matter discussed, and disposition of the subject matter.

(8) Disseminate the Contractor's EEO policy externally by including it in any advertising in the news media, specifically including minority and female news media, and providing written notification to and discussing the Contractor's EEO policy with other Contractors and Subcontractors with whom the Contractor does or anticipates doing business.

(9) Direct its recruitment efforts, both oral and written, to minority, female and community organizations, to schools with minority and female students and to minority and female recruitment and training organizations and to State-certified minority referral agencies serving the Contractor's recruitment area and employment needs. Not later than one month prior to the date for the acceptance of applications for apprenticeship or other training by any recruitment source, the Contractor shall send written notification to organizations such as the above, describing the openings, screening procedures, and tests to be used in the selection process.

(10) Encourage present minority and female employees to recruit other minority persons and women and, where reasonable, provide after school, summer and vacation employment to minority and female youth both on the premises and in areas of a Contractor's workforce.

(11) Tests and other selecting requirements shall comply with 41 CFR Part 60-3.

(12) Conduct, at least every six months, an inventory and evaluation at least of all minority and female personnel for promotional opportunities and encourage these employees to seek or to prepare for, through appropriate training, etc., such opportunities.

(13) Ensure that seniority practices, job classifications, work assignments and other personnel practices, do not have a discriminatory effect by continually monitoring all personnel and employment related activities to ensure that the EEO policy and the Contractor's obligations hereunder are being carried out.

(14) Ensure that all facilities and company activities are nonsegregated except that separate or single-user toilet and necessary changing facilities shall be provided to assure privacy between the sexes.

(15) Document and maintain a record of all solicitations of offers for subcontracts from minority and female construction contractors and suppliers, including circulation of solicitations to minority and female contractor associations and other business associations.

(16) Conduct a review, at least every six months, of all supervisors' adherence to and performance under the Contractors' EEO policies and affirmative action obligations.

(i) Contractors are encouraged to participate in voluntary associations which assist in fulfilling one or more of their affirmative action obligations (subparagraphs (1)-(16) of Paragraph (h) above). The efforts of a contractor association, joint contractor-union, contractor-community, or other similar group of which the Contractor is a member and participant, may be asserted as fulfilling any one or more of its obligations under Paragraph (h) hereof provided that: the Contractor actively participates in the group, makes good faith efforts to assure that the group has a positive impact on the employment of minorities and women in the industry, ensures that the concrete benefits of the program are reflected in the Contractor's minority and female workforce participation, makes good faith efforts to meet its individual goals and timetables, and can provide access to documentation which demonstrates the effectiveness of actions taken on behalf of the Contractor. The obligation to comply, however, is the Contractor's and failure of such a group to fulfill an obligation shall not be a defense for the Contractor's non-compliance.

(j) A single goal for minorities and a separate single goal for women have been established. The Contractor, however, is required to provide equal opportunity and to take affirmative action for all minority groups, both male and female, and all women, both minority and non-minority. Consequently, the Contractor may be in violation hereof if a particular group is employed in a substantially disparate manner (for example, even though the Contractor has achieved its goals for women generally, the Contractor may be in violation hereof if a specific minority group of women is underutilized).

(k) The Contractor shall not use the goals and timetables or affirmative action standards to discriminate against any person because of race, color, religion, sex or national origin.

(l) The Contractor shall not enter into any subcontract with any person or firm debarred from Government contracts pursuant to Executive Order 11246.

(m) The Contractor shall carry out such sanctions and penalties for violation of this clause including suspension, termination and cancellation of existing subcontracts as may be imposed or ordered by the Lessee. Any Contractor who fails to carry out such sanctions and penalties shall be in violation hereof.

(n) The Contractor, in fulfilling its obligations hereunder shall implement specific affirmative actions steps, at least as extensive as those standards prescribed in paragraph (h) hereof so as to achieve maximum results from its efforts to ensure equal employment opportunity. If the Contractor fails to comply with the requirements of these provisions, the Lessee shall proceed accordingly.

(o) The Contractor shall designate a responsible official to monitor all employment related activity to ensure that the company EEO policy is being carried out, to submit reports relating to the provisions hereof as may be required and to keep records. Records shall at least include for each employee the name, address, telephone numbers, construction trade, union affiliation if any, employee identification number when assigned, social security number, race, sex, status (e.g. mechanical apprentice, trainee, helper, or laborer), dates of changes in status, hours worked per week in the indicated trade, rate of pay, and location at which the work is performed. Records shall be maintained in an easily understandable and retrievable form; however, to the degree that existing records satisfy this requirement, contractors shall not be required to maintain separate records.

(p) Nothing herein provided shall be construed as a limitation upon the application of any laws which establish different standards of compliance or upon the application of requirements for the hiring of local or other area residents (e.g., those under the Public Works Employment Act of 1977 and the Community Development Block Grant Program).

(q) Without limiting any other obligation, term or provision under the Lease, the Contractor shall cooperate with all federal, state or local agencies established for the purpose of implementing affirmative action compliance programs and shall comply with all procedures and guidelines established or which may be established by the Port Authority.

PART II.

MINORITY BUSINESS ENTERPRISES/WOMEN-OWNED BUSINESS ENTERPRISES

As a matter of policy the Port Authority requires the Lessee and the Lessee shall itself and shall require the general contractor or other construction supervisor and each of the Lessee's contractors to use every good faith effort to provide for meaningful participation by Minority Business Enterprises (MBEs) and Women-owned Business Enterprises (WBEs) in the construction work pursuant to the provisions of this Schedule E. For purposes hereof, "Minority Business Enterprise" "(MBE)" shall mean any business enterprise which is at least fifty-one percentum owned by, or in the case of a publicly owned business, at least fifty-one percentum of the stock of which is owned by citizens or permanent resident aliens who are minorities and such ownership is real, substantial and continuing. For the purposes hereof, "Women-owned Business

Enterprise" "(WBE)" shall mean any business enterprise which is at least fifty-one percentum owned by, or in the case of a publicly owned business, at least fifty-one percentum of the stock of which is owned by women and such ownership is real, substantial and continuing. A minority shall be as defined in paragraph II(c) of Part I of this Schedule E. "Meaningful participation" shall mean that at least seventeen percent (17%) of the total dollar value of the construction contracts (including subcontracts) covering the construction work are for the participation of Minority Business Enterprises and Women-owned Business Enterprises, of which at least twelve percent (12%) are for the participation of Minority Business Enterprises. Good faith efforts to include meaningful participation by MBEs and WBEs shall include at least the following:

(a) Dividing the work to be subcontracted into smaller portions where feasible.

(b) Actively and affirmatively soliciting bids for subcontracts from MBEs and WBEs, including circulation of solicitations to minority and female contractor associations. The Contractor shall maintain records detailing the efforts made to provide for meaningful MBE and WBE participation in the work, including the names and addresses of all MBEs and WBEs contacted and, if any such MBE or WBE is not selected as a joint venturer or subcontractor, the reason for such decision.

(c) Making plans and specifications for prospective construction work available to MBEs and WBEs in sufficient time for review.

(d) Utilizing the list of eligible MBEs and WBEs maintained by the Port Authority or seeking minorities and women from other sources for the purpose of soliciting bids for subcontractors.

(e) Encouraging the formation of joint ventures, partnerships or other similar arrangements among subcontractors, where appropriate, to insure that the Lessee and Contractor will meet their obligations hereunder.

(f) Insuring that provision is made to provide progress payments to MBEs and WBEs on a timely basis.

(g) Not requiring bonds from and/or providing bonds and insurance for MBEs and WBEs, where appropriate.

Certification of MBEs and WBEs hereunder shall be made by the Office of Business and Job Opportunity of the Port Authority. If the Contractor wishes to utilize a firm not already certified by the Port Authority, it shall submit to the Port Authority a written request for a determination that the proposed firm is eligible for certification. This shall be done by completing and forwarding such form as may be then required by the Port Authority. All such requests shall be in writing addressed to the Office of Business and Job Opportunity, the Port Authority of New York and New Jersey, 225 Park

Avenue South, New York, New York 10003 or such other address as the Port Authority may specify by notice to the Lessee. Certification shall be effective only if made in writing by the Director in charge of the Office of Business and Job Opportunity of the Port Authority. The determination of the Port Authority shall be final and binding.

The Port Authority has compiled a list of the firms that the Port Authority has determined satisfy the criteria for MBE and WBE certification. This list may be supplemented and revised from time to time by the Port Authority. Such list shall be made available to the Contractor upon request. The Port Authority makes no representation as to the financial responsibility of such, firms, their technical competence to perform, or any other performance-related qualifications.

Only MBE's and WBE's certified by the Port Authority will count toward the MBE and WBE goals.

Please note that only sixty percent (60%) of expenditures to MBE or WBE suppliers will count towards meeting the MBE and WBE goals. However, expenditures to MBE or WBE manufacturer's (i.e. suppliers that produce goods from raw materials or substantially alter them before resale) are counted dollar for dollar.

For the Port Authority

Initialled:

For the Lessee

SCHEDULE F

LOCAL BUSINESS ENTERPRISES COMMITMENT

As a matter of policy the Port Authority hereby requires the Lessee and the Lessee shall require any Contractor utilized by the Lessee to perform construction work on the Premises to comply with the provisions set forth hereinafter in this Schedule F.

(1) The Lessee and each Contractor shall use every good faith effort to maximize the participation of Local Business Enterprises (LBEs) in all construction work on the Premises, including without limitation the Construction Work. In order to assure familiarity with the services and materials provided by LBEs, the Contractor shall attend such meetings as may be called by the General Manager of the Airport on LBEs and shall contact the Queens Air Services Development Office (ASDO), located at John F. Kennedy International Airport, Bldg. 80, First Floor, South Service Court, Jamaica, NY 11430 to obtain LBE Vendor Profiles and access ASDO's on-line vendor retrieval system (BASIS). The Port Authority has not checked the references, capabilities or financial background of the LBEs registered with the ASDO, but is referring the Contractor to the ASDO and BASIS solely for the purpose of advising Contractors of LBDs who may be interested in providing services and/or materials to the Contractor.

(2) Good faith efforts to include participation by LBEs in construction work shall include at least the following:

(i) Dividing the work to be subcontracted and services and materials to be procured into small portions, where feasible

(ii) Soliciting bids on portions of the work to be subcontracted and services and materials to be procured from LBE's registered with ASDO and such other LBEs as the Contractor deems appropriate.

(3) The Port Authority is committed to making employment opportunities available to local residents and expects that the Contractor will utilized LBEs.

(4) It is specifically understood and agreed that the requirements set forth herein for the participation of LBEs shall not alter, limit, diminish or modify any of the obligations under this Lease including, without limitation, the obligation to put into

effect the affirmative action program and the MBE and WBE programs in accordance with the provisions set forth above in Schedule E hereof.

For the Port Authority

Initialed:

GA

For the Lessee

Schedule X

Towing	$125.00 per vehicle
Relocation of Vehicle via Flatbed	$ 80.00 per vehicle
Drop Fee	$ 75.00 per vehicle
Relocation of Vehicle	$ 40.00 per vehicle
Road Service (jump starts, lockouts, tire changes, lock deicing, fuel, etc.)	$ 25.00 per vehicle

Storage

$ 15.00 per calendar day

For the Port Authority

STATE OF NEW YORK)
)ss.
COUNTY OF New York)

On this 20th day of Oct., 2008, before me, the subscriber, a notary public of New York, personally appeared David Kagan the Assistant Director of The Port Authority of New York and New Jersey, who I am satisfied is the person who has signed the within instrument: and, I having first made known to him the contents thereof, he did acknowledge that he signed, sealed with the corporate seal and delivered the same as such officer aforesaid and that the within instrument is the voluntary act and deed of such corporation, made by virtue of the authority of the Board of Commissioners.

Marie M. Edwards
(notarial seal and stamp)

Marie M. Edwards
Notary Public, State of New York
No. 01ED4959693 Richmond
Qualified in ~~Kings~~ County
Commission Expires 2/9/2010

For Gaz Realty, Inc.

STATE OF New York)
)ss.
COUNTY OF Nassau)

On this 24 day of September, 2008, before me, the subscriber, a notary public of , personally appeared George Abizeid

the President of Gaz Realty Inc

who I am satisfied is the person who has signed the within instrument; and I having first made known to him the contents thereof, he did acknowledge that he signed, sealed with the corporate seal and delivered the same as such officer aforesaid and that the within instrument is the voluntary act and deed of such corporation, made by virtue of the authority of the Board of Directors.

Michelle Ventura
(notarial seal and stamp)

MICHELLE VENTURA
Notary Public - State of New York
NO. 01VE6128903
Qualified in Nassau County
My Commission Expires 6/22/09

THIS CONSENT TO ASSIGNMENT WITH ASSUMPTION AGREEMENT SHALL NOT BE BINDING UPON THE PORT AUTHORITY
UNTIL DULY EXECUTED BY AN EXECUTIVE OFFICER THEREOF AND DELIVERED TO THE ASSIGNOR AND ASSIGNEE BY AN AUTHORIZED REPRESENTATIVE OF THE PORT AUTHORITY

John F. Kennedy International Airport
Port Authority Lease No. **AYE-048**

CONSENT TO ASSIGNMENT WITH ASSUMPTION AGREEMENT

THIS AGREEMENT, dated as of the **1st day of December 2011**, by and among **THE PORT AUTHORITY OF NEW YORK AND NEW JERSEY**, a body corporate and politic created by Compact between the States of New York and New Jersey, with the consent of the Congress of the United States of America, having an office for the transaction of business at 225 Park Avenue South, New York, New York 10003 (hereinafter called the "Port Authority"), **GAZ REALTY, INC.**, a corporation, formerly organized under the laws of the State of New York (hereinafter called the "Assignor"), and **JFK AP LLC**, a limited liability company organized and existing under the laws of the State of Delaware, having an office and place of business at 366 North Broadway Suite 206, Jericho, New York 11753 (hereinafter called the "Assignee"), whose representative is George Abi Zeid.

WITNESSETH, That:

WHEREAS, heretofore and as of the 1st day of December 2011, the Port Authority and the Assignor entered into a lease identified by Port Authority Lease Number AYE-048 (hereinafter, as the same may have been heretofore amended, extended and supplemented, called the "Lease"), covering certain premises at JFK Airport, in the Borough of Queens, City and State of New York, all as more particularly described in the Permit; and

WHEREAS, the Assignor desires to assign the Lease to the Assignee and the Assignee is desirous of acquiring the Lease and becoming the Lessee of the Port Authority thereunder; and

WHEREAS, the Port Authority is willing to consent to such assignment of the Lease from the Assignor to the Assignee on certain terms, provisions, covenants and conditions as hereinafter set forth;

NOW, THEREFORE, for and in consideration of the covenants and mutual agreements herein contained, the Port Authority, the Assignor and the Assignee hereby agree as follows:

1. The Assignor does hereby assign, transfer and set over to the Assignee, and its successors to its and their own proper use, benefit and behoof forever, the Lease, to have and to hold the same unto the Assignee, and its successors, from December 1, 2011, for and during all the rest, residue and remainder of the term of the letting under the Lease, subject nevertheless to all the terms, provisions, covenants and conditions therein contained; and the Assignor does hereby assign, transfer and set over unto the Assignee, and its successors, all right, title and interest of the Assignor in and to a certain deposit (whether of cash or bonds) in the amount of Three Hundred Eighty Thousand Dollars and No Cents ($380,000.00) made by the Assignor with the Port Authority as security for the performance of the terms, provisions, covenants and conditions of the Lease but subject to the provisions of the Lease and to any claim or right to the said deposit or any part thereof heretofore or hereafter made or to be made on the part of the Port Authority.

2. The Port Authority hereby consents to the foregoing assignment. Notwithstanding anything herein to the contrary, the granting of such consent by the Port Authority shall not be, or be deemed to operate as, a waiver of the requirements for consent (or consents) to each and every subsequent assignment by the Assignee or by any subsequent assignee, nor shall the Assignor be relieved of liability under the terms, provisions and conditions of the Lease by reason of this consent of the Port Authority of one or more other consents to one or more other assignments thereof.

3. The Assignor agrees that this assignment of the Lease and this consent of the Port Authority thereto shall not in any way whatsoever affect or impair the liability of the Assignor to perform all the terms, provisions and conditions, including without limitation thereto the obligation to pay fees, of the Lease on the part of the Lessee thereunder to be performed and that the Assignor shall continue fully liable for the performance of all the terms, provisions, covenants and conditions, including without limitation thereto the obligation to pay fees, on the part of the Lessee thereunder to be performed. The liability of the Assignor as set forth in this paragraph shall remain and continue in full force and effect as to any and every renewal, modification or extension of the Lease whether in accordance with the terms of the Lease or by a separate or additional document, and notwithstanding any such renewal, modification or extension, whether or not the Assignor has specifically consented to such renewal, modification or extension. The liability of the Assignor hereunder shall in no way be affected by the failure of the Port Authority to obtain the Assignor's consent to any such renewal, modification or extension notwithstanding that the Port Authority has previously obtained such consent with respect to a prior renewal, modification or extension.

4. The Assignee does hereby assume the performance of and does hereby agree to perform all the terms, provisions and conditions, including without limitation thereto the obligation to pay fees, contained in the Lease to be performed on the part of the Lessee thereunder as though the Assignee were the original signatory to the Lease. The execution of this instrument by the Port Authority does not constitute a representation by it that the Assignor has performed or fulfilled every obligation required by the Lease; as to such matters, the Assignee agrees to rely solely upon the representation of the Assignor.

5. The liability of the Assignor hereunder shall in no way be affected by:

(a) The release or discharge of the Assignee in any creditors', receivership, bankruptcy or other similar proceeding; or

(b) The impairment, limitation or modification of the liability of the Assignee or its estate in bankruptcy, or of any remedy for the enforcement of the Assignee's said liability under the Lease resulting from the operation of any present or future provision of the Bankruptcy Code or any other statute or from the decision of any court having jurisdiction over the Assignee or its estate; or

(c) The rejection or disaffirmance of the Lease in any creditors', receivership, bankruptcy, or other similar proceeding; or

(d) Any disability or any defense of the Assignee.

6. The Assignee shall provide and maintain in full force and effect throughout the term of the letting under the Lease, a contract of absolute and unconditional guaranty of the due and punctual payment of the rentals and other monetary obligations under the Lease to be paid by the Assignee hereunder and of the full, faithful and prompt performance, observance and fulfillment on the part of the Assignee of all the terms, covenants and conditions of the Lease to be kept, observed, performed and fulfilled. Such contract of guaranty shall be in the form annexed to this Agreement, shall be executed by Gaz Realty, Inc., the corporate parent of the Assignee, with an address at 366 North Broadway, Suite 201, Jericho, New York 11753, in favor of the Port Authority.

7. As hereby amended, all the provisions of the Lease shall be and remain in full force and effect.

8. Neither the Commissioners of the Port Authority, nor any of them, nor any officer, agent or employee thereof, shall be charged personally by the Assignor or by the Assignee with any liability or held liable to either of them under any term or provision of this Agreement, or because of its execution, or because of any breach or attempted or alleged breach thereof.

(THE REMAINDER OF THIS PAGE WAS INTENTIONALLY LEFT BLANK)

IN WITNESS WHEREOF, the parties hereto have executed these presents as of the day and year first above written.

ATTEST:

Secretary

THE PORT AUTHORITY OF NEW YORK AND NEW JERSEY

By

(Title) David Kagan Assistant Director ~~Business, Properties & Airport Development~~

(Seal)

ATTEST:

Secretary

ASSIGNOR:
GAZ REALTY, INC.

By

George Abizeid

(Title) President

(Corporate Seal)

ATTEST:

Secretary

ASSIGNEE:
JFK AP LLC

By

George Abizeid

(Title) ~~President~~ GA

(Corporate Seal)

Port Authority Use Only	
Approval as to Terms:	Approval as to Form:

(Port Authority Acknowledgment)

STATE OF NEW YORK)
)ss.:
COUNTY OF NEW YORK)

On the 10th day of January, ~~2011~~ 2012 before me, the undersigned, a Notary Public in and for said state, personally appeared David Kagan

personally known to me or proved to me on the basis of satisfactory evidence to be the individual whose name is subscribed to the within instrument and acknowledged that he executed the same in his capacity as Assistant Director for the Port Authority of New York and New Jersey, and that by his signature on the instrument, the individual, or the corporation upon behalf of which the individual acted, executed the instrument.

(Signature of Notary Public)

MICHAEL F. SCHMIDT
Notary Public, State of New York
No. 01SC6118149
Qualified in New York County
Commission Expires November 1, 2012

(Assignor Acknowledgment)

STATE OF **New York**)
)ss.:
COUNTY OF **New York**)

On the **10th** day of **January**, 2012 before me, the undersigned, a Notary Public in and for said state, personally appeared **George AbiZeid**

personally known to me or proved to me on the basis of satisfactory evidence to be the individual whose name is subscribed to the within instrument and acknowledged that he executed the same in his capacity as a President of **GAZ Realty, Inc.,** and that by his signature on the instrument, the individual, or the corporation upon behalf of which the individual acted, executed the instrument.

(Signature of Notary Public)

MOIRA MCGINN WALLACE
Notary Public, State of New York
No. 01WA4889637
Qualified in Richmond County
Commission Expires on ~~April 13, 20~~ June 11, 2015

(Assignee Acknowledgment)

STATE OF **New York**)
)ss.:
COUNTY OF **New York**)

On the **10th** day of **January** , 2012 before me, the undersigned, a Notary Public in and for said state, personally appeared **George AbiZeid**

personally known to me or proved to me on the basis of satisfactory evidence to be the individual whose name is subscribed to the within instrument and acknowledged that he executed the same in his capacity as **Managing Member of JFK AP LLC** , and that by his signature on the instrument, the individual, or the corporation upon behalf of which the individual acted, executed the instrument.

Moira McGinn Wallace
(Signature of Notary Public)

MOIRA MCGINN WALLACE
Notary Public, State of New York
No. 01WA4889637
Qualified in Richmond County
Commission Expires on ~~April 13, 20~~
June 11, 2015

Lease No. AYE-048

AGREEMENT OF LEASE

between

THE PORT AUTHORITY OF NEW YORK AND NEW JERSEY

and

GAZ REALTY, INC.

Dated as of December 1, 2011 Volume I of II

TABLE OF CONTENTS

Section 1.	Letting	1
Section 2.	Term	2
Section 3.	Rights of User	2
Section 4.	Rental	4
Section 5.	Condition of the Premises	16
Section 6.	Construction by the Lessee	17
Section 7.	Ingress and Egress	33
Section 8.	Compliance with Governmental Requirements	34
Section 9.	Rules and Regulations	35
Section 10.	Various Obligations of the Lessee	35
Section 11.	Prohibited Acts	38
Section 12.	Care, Maintenance, Rebuilding and Repair by the Lessee	40
Section 13.	Insurance	42
Section 14.	Damage to or Destruction of Premises	43
Section 15.	Indemnity and Liability Insurance	44
Section 16.	Signs	47
Section 17.	Obstruction Lights	47
Section 18.	Additional Rent and Charges	48
Section 19.	Rights of Entry Reserved	48
Section 20.	Condemnation	49
Section 21.	Assignment, Transfer, Mortgage and Subletting	52
Section 21A.	Permitted Pledge	59
Section 22.	Termination	65
Section 23.	Right of Re-entry	68
Section 24.	Waiver of Redemption	68
Section 25.	Survival of the Obligations of the Lessee	68
Section 26.	Reletting by the Port Authority	69
Section 27.	Remedies to be Non-Exclusive	70
Section 28.	Surrender	70
Section 29.	Acceptance of Surrender of Lease	70
Section 30.	Effect of Basic Lease	71
Section 31.	Removal of Property	71
Section 32.	Brokerage	71
Section 33.	Limitation of Rights and Privileges Granted	72
Section 34.	Notices	72
Section 35.	Waiver of Right to Trial by Jury	72
Section 36.	Place of Payments	73
Section 37.	Construction by the Lessee	73

Section 38. Construction and Application of Terms 73
Section 39. Non-liability of Individuals 74
Section 40. Non-Discrimination 74
Section 41. Affirmative Action 75
Section 42. The Lessee's Additional Ongoing Affirmative Action –Equal Opportunity Commitment 75
Section 43. Quiet Enjoyment 77
Section 44. Infringement 78
Section 45. Late Charges 78
Section 46. Obligations In Connection with the Percentage/Variable Rental 79
Section 47. Sales and Services by the Lessee 80
Section 48. Postponement 81
Section 49. Services 81
Section 50. Utility Lines 81
Section 51. Relationship of the Parties 82
Section 52. Definitions 82
Section 53. Storage Tanks 85
Section 54. Federal Airport Aid 87
Section 55. Lessee's Rights Non-Exclusive 88
Section 56. One Hundred Eighty Day Termination 88
Section 57. Force Majeure 90
Section 58. Environmental Compliance 90
Section 59. Space Licenses 91
Section 60. Certain Environmental Testing and Clean-up Obligations 91
Section 61. Books and Records 98
Section 62. Other Agreements 98
Section 63. Operating Names 98
Section 64. Security Deposit 99
Section 65. Additional Right of Termination by the Port Authority 101
Section 66. Refurbishment Plan 101
Section 67. Contract of Guaranty 101
Section 68. Entire Agreement 102

Exhibits A, B, C, D, E, M, X, Y Schedules E and F

Contract of Guaranty

THIS AGREEMENT SHALL NOT BE BINDING UPON THE PORT AUTHORITY UNTIL DULY EXECUTED BY AN EXECUTIVE OFFICER THEREOF AND DELIVERED TO THE LESSEE BY AN AUTHORIZED REPRESENTATIVE OF THE PORT AUTHORITY

Port Authority Lease No. AYE-048

AGREEMENT OF LEASE

THIS AGREEMENT OF LEASE, made effective as of the 1st day of December, 2011 by and between **THE PORT AUTHORITY OF NEW YORK AND NEW JERSEY** (hereinafter called "the Port Authority"), a body corporate and politic established by Compact between the States of New York and New Jersey with the consent of the Congress of the United States of America and having an office at 225 Park Avenue South, in the Borough of Manhattan, in the City, County and State of New York 10003, and **GAZ REALTY, INC.** (hereinafter called "the Lessee"), a corporation of the State of New York having an office and place of business at 366 North Broadway, Suite 206, Jericho, New York 11753, whose representative is George Abi Zeid,

WITNESSETH, That:

The Port Authority and the Lessee, for and in consideration of the covenants and mutual agreements hereinafter contained, hereby covenant and agree as follows:

Section 1. **Letting**

(a) The Port Authority hereby lets to the Lessee and the Lessee hereby hires and takes from the Port Authority at John F. Kennedy International Airport (sometimes hereinafter referred to as "the Airport") in the County of Queens, City and State of New York, the ground spaces as shown in stipple on the drawing attached hereto; marked "Parcel A" and "Parcel B", hereby made a part hereof and marked "Exhibit A", together with the fixtures, improvements and other property of the Port Authority located or to be located thereon, the said lands, fixtures, improvements and other property of the Port Authority (hereinafter collectively referred to as "the Premises"). The parties acknowledge that the premises constitute non-residential real property.

(b) Except to the extent required for the performance of any of the obligations of the Lessee hereunder, nothing contained in this Agreement shall grant to the Lessee any rights whatsoever in the air space above the heights of the structures thereon.

Section 2. Term

(a) The term of the letting under this Agreement shall commence on December 1, 2011 (the "Commencement Date") and shall, unless sooner terminated, expire on the day preceding the twentieth anniversary of the Rental Payment Start Date, as hereinafter defined in Section 4, (the "Expiration Date").

(b) Upon one hundred eighty (180) days' prior written notice to the Lessee, the Port Authority shall have the right, exercised in its sole discretion, to extend the term of the letting for an additional five year period from the Expiration Date (the "Option Period"), upon the same terms and conditions set forth hereunder, provided that the Lessee (i) has complied with Section 66 hereof and, (ii) provided, further that the Lessee is not in default under the terms and conditions of the agreement. The basic and percentage rentals payable during such extension period shall be as set forth in the section of this Agreement entitled "Rental".

(c) Without in any way limiting the provisions set forth in the Sections of this Agreement entitled *"Termination"*, *"Right of Re-entry"* and *"Survival of the Obligations of the Lessee"*, unless otherwise notified by the Port Authority in writing, in the event the Lessee remains in possession of the premises after the expiration or termination of the term of the letting under this Agreement, as it may be extended from time to time, in addition to any damages to which the Port Authority may be entitled under this Agreement or other remedies the Port Authority may have by law or otherwise, the Lessee shall pay to the Port Authority a rental for the period commencing on the day immediately following the date of such expiration or the effective date of such termination and ending on the date that the Lessee shall surrender and completely vacate the premises at an annual rate equal to twice the annual rate of Annual Basic Rental in effect on the date of such expiration or termination, plus (ii) all items of Additional Rent and other periodic charges payable with respect to the premises by the Lessee at the annual rate in effect during the 365 day period immediately preceding such date. Nothing herein contained shall give, or be deemed to give, the Lessee any right to remain in possession of the premises after the expiration or termination of the letting under this Agreement. The Lessee acknowledges that the failure of the Lessee to surrender, vacate and yield up the premises to the Port Authority on the effective date of such expiration or termination will or may cause the Port Authority injury, damage or loss. The Lessee hereby assumes the risk of such injury, damage or loss and hereby agrees that it shall be responsible for the same and shall pay the Port Authority for the same whether such are foreseen or unforeseen, special, direct, consequential or otherwise and the Lessee hereby expressly agrees to indemnify and hold the Port Authority harmless against any such injury, damage or loss.

Section 3. Rights of User

(a) The Lessee shall use the premises for the purpose of operating a vehicle service station, a truck parking facility, a dining facility and a convenience store and for no other purpose whatsoever and in connection therewith shall provide thereat the following sales and services and no other sales and services whatsoever:

(i) The sale and delivery of gasoline, diesel and alternative fuels (for automobiles and trucks),

(ii) The sale and delivery of motor oil;

(iii) The sale and delivery of automotive supplies, tires, parts and accessories;

(iv) The repair (electrical and mechanical only), maintenance and servicing of automobiles, light pick-up trucks and small vans only. It is hereby specifically understood and agreed that the foregoing shall not be provided to any other items of automotive equipment including but not limited to trailers and aircraft ground support vehicles.

(v) Coin operated air compressor machines for inflating tires and coin operated vacuums;

(vi) the operation of a convenience store for the sale, at retail, of non-alcoholic beverages, snack foods, hot and cold sandwiches, soups, newspapers, tobacco products, toiletries and other such products as shall be consented to in advance by the Port Authority;

(vii) to the operation of a dining facility and a food court;

(viii) to the operation of a truck parking facility;

(ix) the operation of a dual bay car wash for the cleaning of automobilies, light pick-up trucks and small vans;

(x) Public restrooms;

(xi) Space for public telephones (the Lessee will not provide the telephone service);

(xii) the operation of such vending machines, as shall be consented to by the Port Authority, to dispense food, beverages, tobacco and tobacco products ;

(xiii) the operation of automated teller machine(s);

(xiv) the pickup and delivery of dry cleaning, which cleaning service shall be operated off airport;

(xv) The Lessee shall be permitted to sell lottery tickets issued by New York State Department of Tax and Finance.

(b) Except in connection with the foregoing purposes, the parking, storage or garaging of automobiles, light pick-up trucks, large trucks, tractor-trailers, aircraft ground support vehicles or any other vehicles at the premises is hereby expressly prohibited.

(c) In addition to the Rights of User set forth in paragraph (a) hereof, the Lessee shall have the right to maintain a New York State official inspection station for motor vehicles. The Lessee shall, during the entire period it conducts such official inspection station, maintain in effect, licenses, certificates or other authorization required to conduct motor vehicle inspections and shall comply with all governmental requirements governing the same. The permission granted herein shall in no way constitute the Lessee an agent of the State of New York for the purpose of conducting such official inspection or constitute the necessary governmental authorization to conduct the same.

(d) In connection with the operation of the truck parking facility permitted in Section 3(a) (viii), above, the Lessee shall be required to post and maintain signage restricting idling in accordance with all applicable regulatory requirements.

Section 4. Rental

A. <u>Rental Obligation</u>

1. <u>Ground Rental</u>

(a) In the event the Rental Payment Start Date occurs in 2012, effective from and after such date, and continuing through the balance of the term of the letting, both dates inclusive, the Lessee shall pay to the Port Authority an annual Ground Rental for the Premises in the amount of Six Hundred Seventy-two Thousand Seven Hundred Sixty-eight Dollars and No Cents ($672,768.00) payable in equal monthly installments of Fifty-six thousand Sixty-four Dollars and No Cents ($56,064.00) on the Rental Payment Start Date and on the first day of each and every month thereafter occurring during the balance of the term of the letting, subject to escalation and adjustment as provided in subparagraph (c) of this Section 4.

(b) In the event the Rental Payment Start Date occurs in 2013, effective from and after such date, and continuing through the balance of the term of the letting, both dates inclusive, the Lessee shall pay to the Port Authority an annual Ground Rental for the Premises in the amount of Six Hundred Ninety-nine Thousand Six Hundred Seventy–two Dollars and No Cents ($699,672.00) payable in equal monthly installments of Fifty-eight Thousand Three Hundred Six Dollars and No Cents ($58,306.00) on the Rental Payment Start Date and on the first day of each and every month thereafter occurring during the balance of the term of the letting, subject to escalation and adjustment as provided in subparagraph (c) of this Section 4.

(c) CPI Adjustments:

The following terms as used in this Section 4 shall have the respective meanings given below:

(1) "CPI" or "Consumer Price Index" shall mean the Consumer Price Index for all Urban Consumers, New York-Northern New Jersey, Long Island, NY- NJ-CT, (All Items unadjusted 1982-84=100) published by the Bureau of Labor Statistics of the United States Department of Labor.

(2) The Port Authority shall ascertain the CPI for the month in which the Rental Payment Start Date occurs and for the month in which the first year anniversary of the Rental Payment Start Date occurs and for the same calendar month in each year thereafter during the term of this Agreement after the same has been published, and the Port Authority shall also determine the annual percentage increase, if any, for each such twelve month period after the same has been published (hereinafter called "the annual CPI percentage increase").

(3) Effective on the first day of the month in which the first year anniversary of the Rental Payment Start Date occurs, and on the first day of every anniversary of the Rental Payment Start Date thereafter occurring during the balance of the term of the letting, including the Option Period, if any, the annual Ground Rental set forth above in paragraph (1)(a) of this subdivision I of this Section 4 (as the same may have been previously adjusted hereunder) shall be increased as follows: (i) the annual Ground Rental as set forth in said paragraph (1)(a), if applicable, shall be multiplied by a percentage composed of 1/2 of the annual CPI percentage increase, if any, for the latest twelve month period using the same calendar month in accordance with subparagraph (2) above plus 100%; and (ii) the annual Ground Rental rate as set forth in said paragraph (1)(a), if applicable, shall be multiplied by 104%; and the greater of the two products so obtained by the calculations set forth in the foregoing clauses (i) and (ii) shall be and become the annual Ground Rental in effect for the annual period commencing on the said first day of the month in which the first anniversary of the Rental Payment Start Date (or, on the first day of the applicable Rental Payment Start Date occurring thereafter during the term of the letting hereunder) occurs and ending on the last day of the immediately succeeding twelfth month.

(4) In the event that the Consumer Price Index for the calendar month to be used in determining such increase of the Ground Rental is not available as of the effective date of said increase, the Lessee shall continue to pay the constant factor of the Ground Rental at the rate then in effect subject to retroactive adjustment and a lump sum payment of any deficiency so determined at such time as the Index for said calendar month becomes available. In the event of the change of basis or the discontinuance of the publication by the United States Department of Labor of the Consumer Price Index such other appropriate index or indexes shall be substituted as may be agreed by the parties hereto as properly reflecting changes in the value of the current United States money in a manner similar to that established in the said indexes used in the latest adjustment. In the event of the failure of the parties to so agree, the Port Authority may select and use such index or indexes as it deems appropriate, provided, however, that the foregoing shall not preclude the Lessee from contesting the Port Authority's selection.

(5) In no event shall any annual rate of the rental established under this paragraph (b) be less than the annual rate of the rental it supersedes.

(d) If the letting hereunder shall terminate on a day other than the last day of a calendar month, the Basic Rental payable on the first day of the calendar month

in which the effective date of termination shall occur shall be an amount equal to the amount of the applicable installment described in this Section multiplied by a fraction the numerator of which shall be the number of days from the first day of the calendar month in which the effective date of termination shall occur to the effective date of termination, both dates inclusive, and the denominator of which shall be the full number of days in that calendar month. If the monthly installment due on the first day of that month has not been paid the Lessee shall pay the prorated part of the amount of that installment; if the monthly installment has been paid, then the excess thereof shall be credited to the Lessee's obligations.

2. Variable Rental

In addition, the Lessee shall also pay to the Port Authority an annual variable rental equivalent to the sum of the following amounts arising during each annual period hereunder:

(i) a fee of $0.03 Cents for each gallon of gasoline sold in excess of Annual Exemption Amount-B, as hereinafter defined, ; and

(ii) a fee of $0.03 Cents for each gallon of diesel sold in excess of Annual Exemption Amount –A, as hereinafter defined ; and

(iii) a fee of $0.03 Cents for each gallon of compressed natural gas, biodiesel, ethanol or hydrogen sold in excess of Annual Exemption Amount-A .

3. Percentage Rental

(a) The Lessee shall also pay to the Port Authority an annual percentage rental equivalent to the sum of the following:

(i) Five percent (5%) of all the gross receipts as hereinafter defined, of the Lessee arising during each annual period, as hereinafter defined, from the sale of all items sold at the premises and from services provided at or from the premises, all as set forth under Section 3(a) (ii)-(ix), inclusive, (xii) and (xiv) which are in excess of Annual Exemption Amount – C, as hereinafter defined; and

(ii) Five percent (5%) of each transaction fee charged to the customer in connection with the use of the automated teller machine described in Section 3 (xiii) during each annual period, which are in excess of Annual Exemption Amount –C.

(b) The computation of the annual percentage rental for each annual period or a portion of an annual period as hereinafter provided shall be individual to such annual period or such portion of an annual period and without relation to any other annual period or portion of an annual period.

(c) The time for making payment of the basic, variable and percentage rentals and the method of calculation thereof shall be as set forth in paragraph B of this Section.

4. As used herein:

(a) "Gross receipts" as used in this Agreement shall include all monies paid or payable to the Lessee for all sales and/or deliveries made or rendered at or from the premises and for all services (including but not limited to the Patron service, as defined in Section 47 of this Agreement) rendered at or from the Airport regardless of when or where the order therefor is received at the Airport, and any other revenues of any type arising out of or in connection with the Lessee's operations at the Airport, provided, however, there shall be excluded from Gross Receipts the following; (i) any taxes imposed by law which are separately stated to and paid by a customer and directly payable to the taxing authority by the Lessee shall be excluded therefrom; (ii) gross receipts shall not include sales made at or from the premises in connection with the sale of lottery tickets, (iii) receipts in the form of refunds from, or the value of merchandise (including food and beverage products) returned to vendors, shippers or manufacturers; and (iv) except with respect to proceeds received for business interruptions paid on a gross earnings business interruption policy, proceeds from all other insurance received as a result of a loss or damage to merchandise or a casualty.

(b) "Annual Period" shall mean, as the context requires, the 1 month period commencing with the Commencement Date and continuing through December 31, 2011 and each of the twelve-month periods thereafter occurring during the balance of the term of the letting hereunder.

(c) "Annual basic rental amount" as used in this Agreement shall mean the amount of the basic rental as set forth in subparagraphs (A) 1 (a) and (b) hereof, as applicable, as the same may be reduced by operation of the abatement and/or proration provisions hereof *provided, however,* that in the event of an annual period of less than twelve calendar months, the annual basic rental amount for such uneven annual period shall be prorated on the basis of the actual number of days contained in said uneven period.

(d) Annual Exemption Amount shall mean the following"

(i) "Annual Exemption Amount-A shall mean 1.5 million gallons of diesel, or compressed natural gas, biodiesel, ethanol or hydrogen (as applicable) sold at or delivered from the premises by the Lessee.

(ii) "Annual Exemption Amount-B" shall mean 3 million gallons of gasoline sold at or delivered from the premises by the Lessee.

(iii) "Annual Exemption Amount-C shall mean Two Million Four Hundred Thousand Dollars and No Cents ($2,400,000.00) during the first Annual Period. Thereafter the Annual Exemption Amount shall be increased in the same proportion as the increases in the Basic Rental.

(e) Rental Payments Start date shall be the earlier of the Completion Date as defined in Section 6 (f)(2) or eighteen (18) months from the Commencement Date.

B. Time of Payment and Computation of Amounts

(1) The Lessee shall pay the ground rental in advance in equal monthly installments due and payable on the Rental Payment Start Date and on the first day of each and every month occurring thereafter throughout the term of the letting, including the Option Period, if any, *provided, however,* that if the commencement or expiration date of the letting shall be other than the first or last day of a month, respectively, the ground rental for the portion of the month during which the letting is effective shall be the amount of the monthly installment prorated on a daily basis.

(2) The Lessee shall pay the variable rental as follows: on the 20th day of the first month following the Rental Payment Start Date and on the 20th day of each and every month thereafter, including the month following the end of each annual period, the Lessee shall render to the Port Authority a sworn statement showing the following: (i) the amount, separately stated, of all gallons of automobile gasoline and other fuel sold or delivered by the Lessee for the preceding month, and specifying and applying the different variable rentals stated in Paragraph 2 hereof and with respect thereto, and (ii) the cumulative amount of all gallons of automobile gasoline and other fuel sold or delivered by the Lessee from the date of the commencement of the annual period for which the report is made through the last day of the preceding month and specifying the cumulative amount of all fees with respect to the same for said annual period; whenever any such statement shall show that the sum of the fees from all gallons of automobile gasoline and other fuel for that annual period are in excess of the applicable annualexemptions amounts, the Lessee shall pay at the time of rendering the statement, an amount equal to the applicable variable rental applied to such excess, , and shall thereafter on the 20th day of each calendar month during that annual period and the calendar month following the end of that annual period pay an amount equal to the sum of the variable rentals from all gallons of automobile gasoline and other fuel of each subsequent calendar month during that annual period. At any time that the annual exemption amount is decreased by abatement as herein provided so that there is an excess of automobile gasoline and other fuel fees as to which the variable rental has not been paid, the same shall be payable to the Port Authority on demand.

(3) The Lessee shall pay the percentage rental as follows: on the 20th day of the first month following the Rental Payment Start Date and on the 20th day of each and every month thereafter, including the month following the end of each annual period, the Lessee shall render to the Port Authority a sworn statement showing the following: all of its gross receipts for the preceding month for all its operations in the premises set forth in subdivisions (ii), (iii), (iv), (v), (vi), (vii) (viii), (ix), (xii) and (xiv) in Section 3. At such time, the Lessee shall pay an amount to the Port Authority equivalent to the sum of the percentage amounts applied to the gross receipts arising in each of the aforesaid categories in accordance with the provisions set forth in Section 4A(3). In addition to the foregoing, on the 20th day of the first month following each anniversary of the Rental Payment Start Date, the Lessee shall submit to the Port Authority a statement setting forth the cumulative amount of gross receipts arising during the preceding

twelve (12) month period certified, at the Lessee's sole cost and expense, by a certified public accountant, of all gross receipts arising during the period from the last preceding anniversary of the Rental Payment Start Date up to and including the last day this Agreement shall be in effect and the Lessee shall, at the time of rendering such statement to the Port Authority, pay the percentage rental due and unpaid as of the last day this Agreement shall be in effect. Upon request of the Port Authority at any time and from time to time, such statements shall be certified by an independent certified public accountant at the Lessee's expense.

(4) Upon any termination of the letting hereunder (even if stated to have the same effect as expiration), the Lessee shall, within twenty (20) days after the effective date of such termination, make a payment of rental computed as follows: first, if the letting hereunder is terminated effective on a date other than the last day of a calendar month, the basic rental for the portion of that month in which the letting remains effective shall be the amount of the monthly installment of basic rental prorated on a daily basis using the actual number of days in the month, and, if the monthly installment due on the first day of that month has not been paid, the Lessee shall pay the prorated part of the amount of that installment; if the monthly installment has been paid, then the excess thereof shall be credited to the Lessee's other obligations; second, the Lessee shall within twenty (20) days after the effective date of termination, render to the Port Authority a sworn statement separately showing all its gross receipts for the annual period in which the effective date of termination happens to fall; and third, the payment then due on account of the variable rental and the percentage rental for the annual period in which the effective date of termination falls shall be the said variable rental calculated in accordance with Paragraph A (2) of this Section 4 and a percentage rental equivalent to the percentage of all the gross receipts of the Lessee set forth in subdivisions (ii), (iii), (iv), (v), (vi), (vii), (viii), (ix), (xii) and (xiv) in Section 3 for such annual period less the amounts previously paid during such annual period.

(5) Nothing contained in this Section shall affect the survival of the obligations of the Lessee as set forth in Section 25 of this Agreement.

C. Abatement

(a) (i) During the period commencing on the Rental Payment Start Date and continuing through December 31, 2012, both dates inclusive, in the event the Lessee shall at any time by the provisions of this Agreement become entitled to an abatement of Ground Rental, for the premises, the Ground Rental shall be reduced for each calendar day or major fraction thereof that the abatement remains in effect at the daily rate of $0.007372 for each square foot of land the use of which is denied the Lessee, (it being understood that there shall be no abatement of Ground Rental under the Lease for any portion of the premises other than land area or for any portion of the term except as specifically provided in this Agreement).

(ii) During the period commencing on the Rental Payment Start Date and continuing through December 31, 2013, both dates inclusive, in the event the Lessee shall at any time by the provisions of this Agreement become entitled to an abatement of Ground Rental, for the premises, the Ground Rental shall be reduced for each calendar day or major fraction thereof that the abatement remains in effect at the daily rate of $0.007671 for each square foot of

land the use of which is denied the Lessee, (it being understood that there shall be no abatement of Ground Rental under the Lease for any portion of the premises other than land area or for any portion of the term except as specifically provided in this Agreement).

The Abatement amounts shall be subject to escalation and adjustment as provided in subparagraph (c) of Section 4, throughout the balance of the term of the letting, including the Option Period, if any.

(iii) During any annual period from and after the first anniversary of the Rental Payment Start Date and continuing through the balance of the term of the letting hereunder, whenever the Lessee shall be entitled hereunder to an abatement of Ground Rental, the applicable annual Ground Rental amount established for such annual period shall be reduced in the same proportion as the applicable annual installment of Ground Rental for each annual period or portion thereof that the abatement is in effect.

D. <u>Rental Credit</u>

(a) The Lessee shall deliver to the Port Authority within Ninety (90) days after the completion of the Demolition Work, defined in this Section, (hereinafter the Demolition Work Completion Date") a certificate of the Lessee covering the Cost of the Demolition Work meeting all the requirements set forth in this paragraph (a) (hereinafter referred to as "the Demolition Work Certificate"), which certificate shall be signed by a responsible fiscal officer of the Lessee and sworn to before a notary public and further shall:

(i) set forth, in reasonable detail, the amounts paid to specified independent third party contractors and the amounts of payments made to other specified persons for the Cost of the Demolition Work performed under this Section hereof and certify that such amounts constitute portions of the Cost of the Demolition Work;

(ii) set forth the total cumulative amount of the payments made by the Lessee for the Cost of the Demolition Work;

(iii) have attached thereto reproduction copies or duplicate originals of the invoices or such independent third party contractors and other persons and an acknowledgment by such independent contractors and other persons of the receipt by them of such amounts and payments;

(iv) certify that the amounts and payments therein set forth constitute all or a portion of the Demolition Work; that the Demolition Work covered by the certificate has been accomplished and that it has been performed in accordance with all the terms and provisions of this Lease; and that the work covered by the certificate was performed by the Lessee prior to the Demolition Work Completion Date ;

(v) certify there is not outstanding indebtedness known to the Lessee, after due and diligent inquiry, then due on account of the Demolition Work, which, if unpaid, might become the basis of a vendor's, mechanic's, laborer's or materialmen statutory or other lien or alleged lien upon the site where the Demolition Work has been performed or upon the Premises or any part thereof, or upon the Lessee's leasehold interest therein or in the Premises, provided that the foregoing shall not limit or impair Section 22 hereof or any rights or remedies of the Port Authority under this Lease or otherwise.

(b) The Lessee shall deliver to the Port Authority within Ninety (90) days after the completion of the Asbestos Removal Work, as defined in this Section (hereinafter "Asbestos Removal Completion Date") a certificate of the Lessee covering the Cost of the Asbestos Removal Work meeting all the requirements set forth in this paragraph (b) (hereinafter referred to as "the Asbestos Removal Work Certificate"), which certificate shall be signed by a responsible fiscal officer of the Lessee and sworn to before a notary public and further shall:

(i) set forth, in reasonable detail, the amounts paid to specified independent third party contractors and the amounts of payments made to other specified persons for the Cost of the Asbestos Removal Work performed under this Section hereof and certify that such amounts constitute portions of the Cost of the Asbestos Removal Work;

(ii) set forth the total cumulative amount of the payments made by the Lessee for the Cost of the Asbestos Removal Work;

(iii) have attached thereto reproduction copies or duplicate originals of the invoices or such independent third party contractors and other persons and an acknowledgment by such independent contractors and other persons of the receipt by them of such amounts and payments;

(iv) certify that the amounts and payments therein set forth constitute all or a portion of the Asbestos Removal Work; that the Asbestos Removal Work covered by the certificate has been accomplished and that it has been performed in accordance with all the terms and provisions of this Lease; and that the work covered by the certificate was performed by the Lessee prior to the Asbestos Removal Completion Date;

(v) certify there is not outstanding indebtedness known to the Lessee, after due and diligent inquiry, then due on account of the Asbestos Removal Work, which, if unpaid, might become the basis of a vendor's, mechanic's, laborer's or materialmen statutory or other lien or alleged lien upon the site where the Asbestos Removal Work has been performed or upon the Premises or any part thereof, or upon the Lessee's leasehold interest therein or in the Premises, provided that the foregoing shall not limit or impair Section 22 hereof or any rights or remedies of the Port Authority under this Lease or otherwise.

(c) Subject to the conditions set forth in this Section, including, without limitation, paragraph (d) below, commencing on the Rental Credit Commencement Date (as hereinafter defined), and on the first day of each Rental Credit Commencement Date thereafter occurring through the day preceding the second anniversary of such date,, the Port Authority shall credit the Lessee against its monthly installments of Ground Rental payable on such date in an amount equal to the monthly installment of Ground Rental payable on such date until the earlier of : (x) such date upon which the Total Rental Credit Amount, as hereinafter defined, has been credited to the Lessee; or (y) the Rental Credit Expiration Date, as hereinafter defined, has occurred.

(d) In the event that the Total Rental Credit balance is less than the amount of the Ground Rental Payable on the first day of any month, then the amount of Ground Rental payable by the Lessee on the first day of such month shall be in an amount equal to the difference obtained by subtracting the rental credit balance from the installment of Ground Rental payable on that date. The Lessee's right to receive a monthly rental credit shall terminate, cease and expire upon the earlier to occur of (i) the termination, cancellation or any other ending of the term of the letting hereunder and (ii) on the Rental Credit Expiration Date, as hereinafter defined.

(e) The Lessee shall not be entitled to receive any Monthly Credit unless the Rental Credit Commencement Date shall have occurred.

(f) Neither the whole nor any part of the Rental Credit Amount or the Monthly Rental Credit shall be or become or shall constitute a debt due and owing from the Port Authority to the Lessee nor shall the Rental Credit Amount or the Monthly Rental Credit be recoverable or applicable in any manner other than as specifically provided for in this Section, including but not limited to a set-off or counterclaim in any action by the Port Authority against the Lessee for rental or other claims.

(g) No amount credited by the Port Authority to the Lessee pursuant to this Section shall be deemed final until each of the Cost of the Demolition Work and the Cost of the Asbestos Removal Work has been finally determined by the Port Authority, nor shall any amount so credited be deemed a final determination by the Port Authority of the amount of the Cost of the Demolition Work or the Cost of Asbestos Removal Work. Such final determination shall occur only after the Port Authority has examined and approved the Demolition Work Certificate and the Asbestos Removal Certificate and the Lessee's books and records. In no event whatsoever shall the cost of any portion of the Cost of Demolition Work or Cost of Asbestos Removal Work as finally determined and computed in accordance with the provisions of this Section, include any expenses, outlays or charges whatsoever by or for the account of the Lessee for or in connection with the performance of any Demolition Work or Asbestos Removal Work unless such work is actually performed nor the costs of any work which is secured by liens, mortgages, other encumbrances or conditional bills of sale, it being understood that the foregoing prohibition on liens, mortgages, other encumbrances and conditional bills of sale is not meant to apply to equipment which is used to perform the Demolition Work or the Asbestos Removal Work.

(h) In the event that a Port Authority audit completed within three (3) years after the latest to occur of (x) the date that the Lessee shall have delivered a complete Demolition Work Certificate to the Port Authority meeting all the requirements set forth in paragraph (a) of this

Section and (y) the date that the Lessee shall have delivered a complete Asbestos Removal Work Certificate to the Port Authority meeting all of the requirements set forth in paragraph (b) of this Section, shall disclose that the amount of the Demolition Work and/or the Asbestos Removal Work is not the amount set forth in the respective work certificates, then the Rental Credit Amount for the Demolition Work and/or the Asbestos Removal Work shall , as the case may be, recalculated based on the amount of the Cost of the Demolition Work and/ or the Cost of the Asbestos Removal Work as determined by the Port Authority audit, and in the event that the Rental Credit Expiration Date has not occurred, then the respective recalculated Rental Credit Balance, as applicable, shall be used to calculate the amount of future Monthly Rental Credit s and if the respective Rental Credit Amount as so recalculated is greater than the previous Rental Credit Amount, the amount of such excess in the recalculated Rental Credit Amount shall be applied to the Lessee's future installations of Basic Rental payments as shall be determined by the Port Authority and in the event that the respective Rental Credit Amount as so recalculated is less than the previous Rental Credit Amount, the amount of any excess Monthly Rental Credits received by the Lessee resulting from such recalculation shall be immediately payable by the Lessee to the Port Authority upon demand.

(i) If the Lessee has included in any portion of the Cost of the Demolition or the Asbestos Removal Work any item as having been incurred, but which in the reasonable opinion of the Port Authority was not so incurred, or which in the reasonable opinion of the Port Authority was not so incurred, or which in the reasonable opinion of the Port Authority if so incurred is not an item properly chargeable to such element of cost under sound accounting practice or to the Cost of the Demolition Work or the Cost of the Asbestos Removal Work, or does not represent an appropriate division of the costs of a particular contract according to time of performance or delivery and the parties have been unable to resolve their differences within (90) days after the Port Authority gives its notice to the Lessee objecting to the same, then such dispute shall be decided by arbitration according to the existing rules of the American Arbitration Association or any successor association. Costs of such arbitration shall be borne equally by the Port Authority and the Lessee.

(j) In any such arbitration as to whether any item included by the Lessee in its computation of cost has been incurred, the question to be submitted to the arbitrators for decision shall be as follows:

> "Was all or any part of such cost incurred by the Lessee; and if part but not all of such cost was incurred, what was the amount which was so incurred?"

(k) In any such arbitration as to whether any item included by the Lessee in its computation of cost is properly chargeable thereunder under generally accepted accounting principles consistently applied, the question to be submitted to the arbitrators for decision shall be as follows:

> "Can it reasonably be held that all or any part of such cost is properly chargeable under generally accepted accounting principles consistently applied; and if part but not all of such cost can reasonably be held to be so chargeable, then what amount can reasonably be held to be so chargeable?"

(l) In any such arbitration as to whether any item included by the Lessee in its computation of cost is properly chargeable thereunder under the principles of this Lease as part of the Cost of the Demolition Work and the Cost of the Asbestos Removal Work, whichever is applicable, including whether or not there has been a proper allocation and breakdown of costs where a contract or contracts covers different categories of work, the question to be submitted to the arbitrators for decision shall be as follows:

> "Can it reasonably be held that the part of the Cost of the Demolition Work or the Cost of the Asbestos Removal Work, as applicable, has been properly determined under the principles of the Lease including whether there has been a sound allocation and breakdown of costs under a contract or contracts covering different categories or work under generally accepted accounting principles consistently applied, or if not, then what amount should be properly determined"?

(m) For the purposes of this Section, the following terms shall have the respective meanings, below:

(aa) "Demolition Work" shall mean the complete demolition of Building No. 138 as shown in diagonal hatch of the drawing attached hereto, herby made a part hereof and marked "Exhibit C" including the foundations and floor slabs, the filling in to grade with clean soil and grass, and the removal and disposition of all demolition debris from the Airport. The Demolition Work shall be performed in accordance with all applicable Environmental Requirements and shall include, without limitation, all appropriate, required or necessary removal of all asbestos, lead, pavement and other Hazardous Substances and the handling, transporting and off-Airport disposal thereof (including, if required, disposal of asbestos in an off-Airport long-term asbestos-only disposal.

> The Lessee, its contractors, subcontractors, suppliers of materials and furnishers of service shall at all reasonable times have access to the land area shown in stipple on Exhibit C and to Building 138 as necessary to perform the Demolition Work and Asbestos Removal Work.

(bb) "Cost of the Demolition Work" shall mean the sum of the following amount and such amounts only (but only to the extent such amounts are included in the Demolition Work Certificate and as such amounts may be adjusted pursuant to the provisions of paragraph (g) of this Section) actually paid by the Lessee for the Demolition Work, to the extent the inclusion of the same is permitted by generally accepted accounting principles consistently applied:

(i) the amounts paid by the Lessee to independent third party contractors for work actually performed and labor and materials actually furnished in connection with the Demolition Work, inclusive of sales, use and like taxes where applicable, and

(ii) the amounts actually paid by the Lessee in connection with the Demolition Work (without duplication and excluding any amounts included in any other item hereof) for engineering , architectural, professional and consulting services, and the supervision of construction, inclusive of sales, use and like taxes

where applicable, *provided, however,* that such amounts pursuant to this subdivision (ii) shall not exceed fifteen percent (1%) of the amounts described in subdivision (i); *provided, however* , (x) the Cost of the Demolition Work shall be limited to work covered by the Demolition Work Certificate submitted by the Lessee pursuant to and in accordance with this Section ; and (y) it is specifically understood and agreed that no amounts paid for or in connection with any trade fixtures or other personal property of the Lessee or any payment or payments on account of any administrative or other overhead costs of the Lessee whether or not allocated to the Demolition Work by the Lessee's own accounting practices shall be included in the Cost of the Demolition Work; and (z) the Cost of the Demolition Work shall not include any payment to a firm or corporation wholly or partially owned by or in common ownership with the Lessee of any Demolition Work that is not performed in accordance with all of the terms and provision s of this Agreement.

(cc) "Asbestos Removal Work" shall mean performing a full asbestos survey of Building No. 138 to be demolished. Following the results of the asbestos survey the complete removal and proper disposal of all Asbestos Containing Material (ACM) determined to be present, shall be performed by the Lessee. The Asbestos Removal Work shall be performed in accordance with all applicable Environmental Requirements and shall include, without limitation, all appropriate, required or necessary removal of all asbestos, lead, and other Hazardous substances and the handling, transporting and off-Airport disposal thereof (including, if required disposal of asbestos in an off-Airport long-term asbestos-only disposal facility).

(dd) "Cost of Asbestos Removal Work" shall mean the sum of the following amounts, and such amounts only (but only to the extent such amounts are included in the Asbestos Removal Work Certificate and as such amounts ma6y be adjusted pursuant to the provisions of paragraph (g) of this Section)actually paid by the Lessee for the Asbestos Removal Work, to the extent the inclusion of the same is permitted by generally accepted accounting principles consistently applied:

(i) the amounts paid by the Lessee to independent third party contractors for work actually performed and labor and materials actually furnished in connection with the Asbestos Removal Work, inclusive of sales, use and like taxes where applicable, and

(ii) the amounts actually paid by the Lessee in connection with the Asbestos Removal Work (without duplication and excluding any amounts included in any other item hereof) for engineering , architectural, professional and consulting services, and the supervision of construction, inclusive of sales, use and like taxes where applicable, *provided, however,* that such amounts pursuant to this subdivision (ii) shall not exceed fifteen percent (1%) of the amounts described in subdivision (i); *provided, however* , (x) the Asbestos Removal Work shall be limited to work covered by the Asbestos Removal Work Certificate submitted by the Lessee pursuant to and in accordance with this Section ; and (y) it is specifically understood and agreed that no amounts paid for or in connection with any trade fixtures or other personal property of the Lessee or any payment or

payments on account of any administrative or other overhead costs of the Lessee whether or not allocated to the Asbestos Removal Work by the Lessee's own accounting practices shall be included in the Cost of the Asbestos Removal Work; and (z) the Cost of the Asbestos Removal Work shall not include any payment to a firm or corporation wholly or partially owned by or in common ownership with the Lessee of any Asbestos Removal Work that is not performed in accordance with all of the terms and provision s of this Agreement.

(ee) "Total Rental Credit Amount" shall mean the sum of the following: an amount up to One Million Dollars and No Cents ($1,000,000.00) for the Demolition Work plus up to Two Hundred-fifty Thousand Dollars and No Cents ($250,000.00) for Asbestos Removal Work.

(ff) "Rental Credit Commencement Date" shall mean the first day of the first full calendar month following the date the Lessee has submitted to the Port Authority the last of the Demolition Work Certificate or the Asbestos Removal Work Certificate

(gg) "Rental Credit Expiration Date" shall mean the period expiring on the last day of the 24th month after the Rental Credit Commencement Date.

Section 5. Condition of the Premises

(a) The Lessee hereby acknowledges that it has not relied upon any representation or statement of the Port Authority or its Commissioners, officers, employees or agents as to the condition of the premises, or its fitness for use as a multi-fuel vehicle service station. The Lessee, prior to the execution of this Agreement, has thoroughly examined the premises and determined them to be suitable for the Lessee's operation hereunder and the Lessee hereby agrees to take the premises in the condition they are in as of the commencement of the term of the letting hereunder and to assume all responsibility for any and all risks, costs and expenses of any kind whatsoever caused by, arising out of or in connection with, the condition of the premises whether any aspect of such condition existed prior to, on or after the effective date of the letting of the premises hereunder including without limitation all Environmental Requirements and Environmental Damages, and to indemnify and hold harmless the Port Authority for all such risks, requirements, costs and expenses. Without limiting any obligation of the Lessee to commence operations hereunder at the time and in the manner stated elsewhere in this Agreement, the Lessee agrees that no portion of the premises will be used initially or at any time during the letting which is in a condition unsafe or improper for the conduct of the Lessee's operations hereunder so that there is possibility of injury or damage to life or property. It is hereby understood and agreed that whenever reference is made in this Lease to the condition of the premises as of the commencement of the term thereof, the same shall be deemed to mean the condition of the premises as of the date of this Agreement, and as to the improvements made and the alteration work performed during the term of the Agreement in the condition existing after the completion of the same. The Lessee understands that it will be its responsibility to furnish and install (subject to the provisions of Section 6 of the Lease) all pumps, trade fixtures, accessories, equipment and other property including any necessary removal and demolition and to perform all work as may be necessary to put the multi-fuel service station in first class operating condition for the purposes set forth in Section 3 hereof.

(b) All the obligations of the Lessee under this Section with respect to the responsibilities, risks, costs and expenses assumed by the Lessee shall survive the expiration or termination of this Agreement.

Section 6. Construction by the Lessee

(a) The Lessee shall, prior to its submission to the Port Authority of the plans and specifications hereinafter provided for, submit to the Port Authority for its consent, the Lessee's comprehensive plan for the development of the site, including but not limited to renderings, layouts, locations, models, estimated commencement and completion dates, and preliminary functional plans, soil erosion control and sediment plan, storm water pollution protection plan, spill prevention control and countermeasures plan and sites specific environmental management and waste disposal plan.

(1) Without limiting the above, the Lessee agrees that said comprehensive plan shall include the construction on and under the site of:

(i) A multi- vehicle fuel service station, service bay area, convenience store, dining facility, food court, car wash and restroom facilities consisting of approximately 19,000 square feet of space.

(ii) all appropriate lines, pipes, mains, cables, manholes, wires, tubes, ducts, assemblies, conduits and other facilities required in connection with or relating to the mechanical, utility, electrical, storm sewer, sanitary sewer, telephone, fire alarm, fire protection, gas, heating, ventilation and air-conditioning, steam, drainage, communications, and other systems needed for the multi-fuel service station and automated car wash;

(iii) all necessary or appropriate ground roadways, ramps, sidewalks, vehicular service areas, and pedestrian circulation areas, together with all related and associated areas and facilities, including an access ramp to the premises from the on-ramp to the Central Terminal Roadway (the foregoing being herein sometimes called the "circulation areas");

(iv) all grading and paving of ground areas and appropriate landscaping together with all related and associated , storm water collection, management conveyance and treatment systems;

(v) all necessary or required fencing;

(vi) All other appropriate or necessary work in connection with the foregoing items, including without limitation thereto, all borings, surveys, route marker signs, obstruction lights and material inspections and also including any tie-ins to utility lines and roadway access stubs, and

(vii) an Environmental Management Plan, setting forth in detail the Lessee's plans for all handling, excavation, depositing, testing, screening, backfilling, removal, storage, transportation, disposal and other handling of soil and the treatment of ground and wastewater in the performance of the construction Work (such plan, as approved by the Port Authority, the "Environmental Management Plan") the Construction Work shall be performed in accordance with the Environmental Management Plan .

(2) All of the foregoing work shall be constructed by the Lessee on the site and off the site where required, and where constructed on the site shall be and become a part of the premises under the Lease and is sometimes collectively referred to herein as the "Construction Work".

(3) The Lessee shall keep the comprehensive plan covered by this paragraph (a) up to date and shall submit to the Port Authority for its prior approval any amendments, revisions, or modifications thereof.

(b) (1) Prior to the commencement of the Construction Work, the Lessee shall cause to be delivered to the Port Authority a payment and performance bond in favor of the Port Authority (in the form attached hereto as Exhibit B and hereby made a part hereof) in an amount equal to the total contract price of the Construction Work in compliance with the approved plans and specifications, protecting the Port Authority from monetary risk during, relating to or arising out of the construction work, issued by a surety company listed in the Financial Management Service of the United State Department of Treasury. Such payment and performance bond shall be in effect during the period from the commencement of the construction work to and including the Completion Date (as herein defined) and the Lessee shall keep and maintain said payment and performance bond in full force and effect. The said payment and performance bond shall be in an amount equal to the entire contract price for the construction work. Said payment and performance bond shall guarantee the full, faithful and prompt performance of and compliance with, on the part of the Lessee, all of the terms, provisions, covenants and conditions of this Agreement relating to the construction work. The existence of the payment and performance bond described in this Agreement shall not limit or alter any other remedies of the Port Authority under this Agreement, and the Port Authority may from time to time and at any time elect to pursue (or not to pursue) its rights under any payment and performance bond without thereby limiting, voiding or relinquishing any of its other rights or remedies under this Agreement.

(2) Prior to the commencement of the construction work, the Lessee shall submit to the Port Authority for the Port Authority's approval complete plans and specifications therefor. The Port Authority may refuse to grant approval with respect to the construction work if, in its opinion, any of the proposed construction work as set forth in said plans and specifications (all of which shall be in such detail as may reasonably permit the Port Authority to make a determination as to whether the requirements hereinafter referred to are met) shall:

(i) Be unsafe, unsound, hazardous or improper for the use and occupancy for which it is designed, or

(ii) Not comply with the Port Authority's requirements for harmony of external architecture of similar existing or future improvements at the Airport, or

(iii) Not comply with the Port Authority's requirements with respect to external and interior building materials and finishes of similar existing or future improvements at the Airport, or

(iv) Be designed for use for purposes other than those authorized under the Agreement, or

(v) Set forth ground elevations or heights other than those prescribed by the Port Authority, or

(vi) Not be at locations or not be oriented in accordance with the Lessee's approved comprehensive plan, or

(vii) Not comply with the provisions of the Basic Lease, as defined in the Section of this Agreement, entitled "Definitions", including without limiting the generality thereof, those provisions of the Basic Lease providing that the Port Authority will conform to the enactments, ordinances, resolutions and regulations of the City of New York and its various departments, boards and businesses in regard to the construction and maintenance of buildings and structures and in regard to health and fire protection which would be applicable if the Port Authority were a private corporation to the extent that the Port Authority finds it practicable so to do, or

(viii) Be in violation or contravention of any other provisions and terms of this Agreement, or

(ix) Not comply with all applicable governmental laws, ordinances, enactments, resolutions, rules and orders, or

(x) Not comply with all applicable requirements of the National Board of Fire Underwriters and the Fire Insurance Rating Organization of New York , or

(xi) Not comply with the Port Authority's requirements with respect to landscaping, or

(xii) Not comply with Port Authority's requirements and standards with respect to noise, air pollution, water pollution or other types of pollution, or

(xiii) Not comply with Port Authority's New York State Department of Environmental Conservation State Pollution Discharge Elimination system (SPDES) Permit # NY-0008109, or

(xiv) Not comply with the construction limitations set forth in Exhibit A, or

(xv) Not comply with the American National Standard Specifications for Buildings and Facilities-Providing Accessibility and Usability for Physically Handicapped People, ANSI A117.1-1986.

(c) All construction work shall be done in accordance with the following terms and conditions:

(1) The Lessee hereby assumes the risk of loss or damage to all of the construction work prior to the completion thereof and the risk of loss or damage to all property of the Port Authority arising out of or in connection with the performance of the construction work. In the event of such loss or damage, the Lessee shall forthwith repair, replace and make good the construction work and the property of the Port Authority without cost or expense to the Port Authority. The Lessee shall itself and shall also require its contractors to indemnify and hold harmless the Port Authority, its Commissioners, officers, agents and employees from and against all claims and demands, just or unjust, of third persons (including employees, officers, and agents of the Port Authority) arising or alleged to arise out of the performance of the construction work and for all expenses incurred by it and by them in the defense, settlement or satisfaction thereof, including without limitation thereto, claims and demands for death, for personal injury or for property damage, direct or consequential, whether they arise from the acts or omissions of the Lessee, of any contractors of the Lessee, of the Port Authority, or of third persons, or from acts of God or of the public enemy, or otherwise, (including claims of the City of New York against the Port Authority pursuant to the provisions of the Basic Lease whereby the Port Authority has agreed to indemnify the City against claims), excepting only claims and demands which result solely from affirmative wilful acts done by the Port Authority, its Commissioners, officers, agents and employees with respect to the construction work.

If so directed, the Lessee shall at its own expense defend any suit based upon any such claim or demand (even if such suit, claim or demand is groundless, false or fraudulent), and in handling such it shall not, without obtaining express advance written permission from the General Counsel of the Port Authority, raise any defense involving in any way the jurisdiction of the tribunal over the person of the Port Authority, the immunity of the Port Authority, its Commissioners, officers, agents or employees, the governmental nature of the Port Authority, or the provisions of any statutes respecting suits against the Port Authority.

(2) Prior to engaging or retaining an architect or architects for the construction work, the name or names of said architect or architects shall be submitted to the Port Authority for its approval. The Port Authority shall have the right to disapprove any architect who may be unacceptable to it. All construction work shall be done in accordance with plans and specifications to be submitted to and approved by the Port Authority prior to the commencement of the construction work, and until such approval has been obtained the Lessee shall continue to resubmit plans and specifications as required. Upon approval of such plans and

specifications by the Port Authority, the Lessee shall proceed diligently at its sole cost and expense to perform the construction work. All construction work, including workmanship and materials, shall be of first class quality. The Lessee shall re-do, replace or construct at its own cost and expense, any construction work not done in accordance with the approved plans and specifications, the provisions of this Section 2 or any further requirements of the Port Authority.

The Lessee shall expend not less than Nine Million Dollars and No Cents ($9,000,000.00) with respect to the construction work. The Lessee shall complete the construction work no later than Eighteen Months (18 months) following the Commencement Date as defined in Section 2 of this Agreement; *provided, however*, that the Lessee shall not be liable for any failure, delay or interruption in performing its obligations hereunder due to causes or conditions beyond the control of the Lessee. Further, the Lessee shall not be liable unless the failure, delay or interruption shall result from failure on the part of the Lessee to use reasonable care to prevent or reasonable efforts to cure such failure, delay or interruption.

(3) Prior to entering into a contract for any part of the construction work, the Lessee shall submit to the Port Authority for its approval the names of the contractors to whom the Lessee proposes to award said contracts. The Port Authority shall have the right to disapprove any contractor who may be unacceptable to it. The Lessee shall include in all such contracts such provisions and conditions as may be reasonably required by the Port Authority. Without limiting the generality of the foregoing all of the Lessee's construction contracts shall provide as follows: "If (i) the Contractor fails to perform any of his obligations under the Contract, including his obligation to the Lessee to pay any claims lawfully made against him by any materialman, subcontractor or workman or other third person which arises out of or in connection with the performance of the Contract or (ii) any claim (just or unjust) which arises out of or in connection with the Contract is made against the Lessee or (iii) any subcontractor under the Contract fails to pay any claims, lawfully made against him by any materialman, subcontractor, workman or other third persons which arises out of or in connection with the Contract or if in the Lessee's opinion any of the aforesaid contingencies is likely to arise, then the Lessee shall have the right, in its discretion, to withhold out of any payment (final or otherwise and even though such payments have already been certified as due) such sums as the Lessee may deem ample to protect it against delay or loss or to assume the payment of just claims of third persons, and to apply such sums in such manner as the Lessee may deem proper to secure such protection or satisfy such claims. All sums so applied shall be deducted from the Contractor's compensation. Omission by the Lessee to withhold out of any payment, final or otherwise, a sum for any of the above contingencies, even though such contingency has occurred at the time of such payment, shall not be deemed to indicate that the Lessee does not intend to exercise its right with respect to such contingency. Neither the above provisions for rights of the Lessee to withhold and apply monies nor any exercise, or attempted exercise of, or omission to exercise such rights by the Lessee shall create any obligation of any kind to such materialmen, subcontractors, workmen or other third persons. Until actual payment is made to the Contractor, his right to any amount to be paid under the Contract (even though such amount has already been certified as due) shall be subordinate to the rights of the Lessee under this provision."

The Lessee shall file with the Port Authority a copy of its contracts with its contractors prior to start of the construction work.

(4) The Lessee shall furnish or require its architect to furnish a full time resident engineer during the construction period. The Lessee shall require certification by a licensed engineer of all pile driving data, if applicable, and of all controlled concrete work and such other certifications as may be requested by the Port Authority from time to time.

(5) The Lessee agrees to be solely responsible for any plans and specifications used by it and for any loss or damages resulting from the use thereof, notwithstanding that the same have been approved by the Port Authority and notwithstanding the incorporation therein of Port Authority recommendations or requirements. Notwithstanding the requirement for approval by the Port Authority of the contracts to be entered into by the Lessee or the incorporation therein of Port Authority requirements or recommendations, and notwithstanding any rights the Port Authority may have reserved to itself hereunder, the Port Authority shall have no liabilities or obligations of any kind to any contractors engaged by the Lessee or for any other matter in connection therewith and the Lessee hereby releases and discharges the Port Authority, its Commissioners, officers, representatives and employees of and from any and all liability, claims for damages or losses of any kind, whether legal or equitable, or from any action or cause of action arising or alleged to arise out of the performance of any construction work pursuant to the contracts between the Lessee and its contractors. Any warranties contained in any construction contract entered into by the Lessee for the performance of the construction work hereunder shall be for the benefit of the Port Authority as well as the Lessee, and the contract shall so provide.

(6) The Port Authority shall have the right, through its duly designated representatives, to inspect the construction work and the plans and specifications thereof, at any and all reasonable times during the progress thereof and from time to time, in its discretion, to take samples and perform testing on any part of the construction work.

(7) The Lessee agrees that it shall deliver to the Port Authority two (2) sets of "as built" drawings of the construction work in an electronic CADD data file on a CD Rom in a format to be designated by the Port Authority, all of which shall conform to the specifications of the Port Authority (the receipt of a copy of said specifications prior to the execution of this Lease being hereby acknowledged by the Lessee). The Lessee shall during the term of this Lease keep said digital electronic files of drawings and said electronic CADD data files current showing thereon any changes or modifications which may be made and provide copies thereof to the Port Authority as the Port Authority may request from time to time. No changes or modifications shall be made without prior Port Authority consent.

(8) The Lessee shall, if requested by the Port Authority, take all reasonable measures to prevent erosion of the soil and the blowing of sand during the performance of the construction work, including but not limited to the fencing of the premises or portions thereof or other areas and the covering of open areas with asphaltic emulsion or similar materials as the Port Authority may direct.

(9) (i) Subject in all events to the Environmental Requirements, any soil, dirt, sand or other matter (collectively, the "Matter") excavated by the Lessee during the

course of the construction work and not used at the Premises shall not be stored at the Premises or elsewhere at the Airport, but shall promptly be delivered by the Lessee to any location off the Airport as may be approved by the Port Authority.

(ii) The Lessee shall take title to the Matter, and the entire proceeds, if any, of the sale or other disposition of the Matter shall belong to the Lessee.

(ii) The Lessee shall submit to the Port Authority all manifests and bills of lading covering any Matter, and in addition shall prepare and submit to the Port Authority all documentation that the Lessee is required to submit to the disposal site or the Governmental Authority having jurisdiction with respect to any Matter.

(iii) Prior to backfilling any excavations in which the construction of utilities has been completed, the Lessee shall notify the Resident Engineer that such excavations shall not be backfilled until the Port Authority shall have documented and surveyed the line and grade of such utilities.

(10) The Lessee shall pay or cause to be paid all claims lawfully made against it by its contractors, subcontractors, materialmen and workmen, and all claims lawfully made against it by other third persons arising out of or in connection with or because of the performance of the construction work, and shall cause its contractors and subcontractors to pay all such claims lawfully made against them, provided, however, that nothing herein contained shall be construed to limit the right of the Lessee to contest any claim of a contractor, subcontractor, materialman, workman and/or other person and no such claim shall be considered to be an obligation of the Lessee within the meaning of this Section unless and until the same shall have been finally adjudicated. The Lessee shall use its best efforts to resolve any such claims and shall keep the Port Authority fully informed of its actions with respect thereto. Nothing herein contained shall be deemed to constitute consent to the creation of any liens or claims against the premises nor to create any rights in said third persons against the Port Authority or the Lessee.

(11) (i) The Lessee in its own name as insured and including the Port Authority as an additional insured shall procure and maintain Comprehensive General Liability insurance, including but not limited to premises-operations, products liability-completed operations, explosion, collapse and underground property damages, personal injury and independent contractors, with a broad form of property damage endorsement, and with a contractual liability endorsement covering the obligations assumed by the Lessee pursuant to subparagraphs (1) and (5) of this paragraph (c), and Comprehensive Automobile Liability insurance covering owned, non-owned and hired vehicles. The said Comprehensive General Liability insurance policy shall have a limit of not less than $25,000,000 combined single limit per accident for bodily injury and property damage liability. The said Automobile Liability insurance policy shall have a limit of not less than $5,000,000 per accident for bodily injury and property damage liability.

Without limiting the provisions hereof, in the event the Lessee maintains the foregoing insurance in limits greater than aforesaid, the Port Authority shall be included therein as an additional insured to the full extent of all such insurance in accordance with all the terms and provisions hereof.

The foregoing shall be in addition to all policies of insurance otherwise required by this Agreement, or the Lessee may provide such insurance by requiring each contractor engaged by it for the construction work to procure and maintain such insurance including such contractual liability endorsement, said insurance, whether procured by the Lessee or by a contractor engaged by it as aforesaid, not to contain any exclusion for bodily injury to or sickness, disease or death of any employee of the Lessee or of any of its contractors which would conflict with or in any way impair coverage under the contractual liability endorsement. Further, the Lessee shall provide and maintain or cause its contractors to provide and maintain contractor's property and equipment coverage for the full value of such property and equipment with the Port Authority insured thereunder as its interests may appear. All of the aforesaid policy or policies of insurance shall also provide or contain an endorsement providing that the protections afforded the Lessee thereunder with respect to any claim or action against the Lessee by a third person shall pertain and apply with like effect with respect to any claim or action against the Lessee by the Port Authority, and shall also provide or contain an endorsement providing that the protections afforded the Port Authority thereunder with respect to any claim or action against the Port Authority by the Lessee or its contractor(s) shall be the same as the protections afforded the Lessee thereunder with respect to any claim or action against the Lessee by a third person as if the Port Authority were the named insured thereunder; but such provision or endorsement shall not limit, vary or affect the protections afforded the Port Authority thereunder as an additional insured.

(ii) The Lessee shall also procure and maintain in effect, or cause to be procured and maintained in effect Workers' Compensation Insurance and Employer's Liability Insurance with limits not less than $1,000,000 per accident.

(iii) The insurance required hereunder in this subparagraph (11) shall be maintained in effect during the performance of the construction work and shall be in compliance and subject to the provisions of paragraph (c) of Section 15 hereof.

(12) The Lessee shall be under no obligation to reimburse the Port Authority for expenses incurred by the Port Authority in connection with its normal review and approval of the original plans and specifications submitted by the Lessee pursuant to this Section. The Lessee however agrees to pay to the Port Authority upon its demand the expenses incurred by the Port Authority in connection with any additional review for approval of any changes, modifications or revisions of the original plans and specifications which may be proposed by the Lessee for the Port Authority's approval. The expenses of the Port Authority for any such additional review and approval shall be computed on the basis of direct payroll time expended in connection therewith plus 100%. Wherever in this Lease reference is made to "direct payroll time", costs computed thereunder shall include a prorata share of the cost to the Port Authority of providing employee benefits, including, but not limited to, pensions, hospitalization, medical and life insurance, vacations and holidays. Such computations shall be in accordance with the Port Authority's accounting principles as consistently applied prior to the execution of this Lease.

(13) The Lessee shall prior to the commencement of construction and at all times during construction submit to the Port Authority all engineering studies with respect to construction and samples of construction materials as may be required at any time and from time to time by the Port Authority.

(14) The Lessee shall procure and maintain Builder's Risk (All Risk) Completed Value Insurance covering the construction work during the performance thereof including material delivered to the site but not attached to the realty. Such insurance shall be in compliance with and subject to the applicable provisions of Section 13 hereof and shall name the Port Authority, the City of New York, the Lessee and its contractors and subcontractors as additional insureds and such policy shall provide that the loss shall be adjusted with and payable to the Lessee. Such proceeds shall be used by the Lessee for the repair, replacement or rebuilding of the construction work and any excess shall be paid over to the Port Authority. The policies or certificates representing insurance covered by this paragraph (14) shall be delivered by the Lessee to the Port Authority at least thirty (30) days prior to the commencement of the construction work, and each policy or certificate delivered shall bear the endorsement of or be accompanied by evidence of payment of the premium thereof and, also, a valid provision obligating the insurance company to furnish the modification of the insurance evidenced by said policy or certificate. Renewal policies or certificates shall be delivered to the Port Authority at least fifteen (15) days before the expiration of the insurance which such policies are to renew.

The insurance covered by this paragraph (14) shall be written by companies approved by the Port Authority. If at any time any of the insurance policies shall be or become unsatisfactory to the Port Authority as to the form or substance or if any of the carriers issuing such policies shall be or become unsatisfactory to the Port Authority, the Lessee shall promptly obtain a new and satisfactory policy in replacement. If at any time the Port Authority so requests, a certified copy of each of the said policies shall be delivered to the Port Authority.

(15) The Lessee shall at the time of submitting the comprehensive plan to the Port Authority as provided in paragraph (a) hereof submit to the Port Authority its forecasts of the number of people who will be working at various times during the term of the Lease at the premises, the expected utility demands of the premises, noise profiles and such other information as the Port Authority may require. The Lessee shall continue to submit its latest forecasts and such other information as may be required as aforesaid as the Port Authority shall from time to time and at any time request.

(16) The Lessee shall execute and submit for the Port Authority's approval a Construction Application or Applications in the form prescribed by the Port Authority covering the construction work or portions thereof. The Lessee shall comply with all the terms and provisions of the approved Construction Applications. In the event of any inconsistency between the terms of any Construction Application and the terms of this Lease, the terms of this Lease shall prevail and control.

(17) Nothing contained in this Lease shall grant or be deemed to grant to any contractor, architect, supplier, subcontractor or any other person engaged by the Lessee or

any of its contractors in the performance of any part of the construction work any right of action or claim against the Port Authority, its Commissioners, officers, agents and employees with respect to any work any of them may do in connection with the construction work. Nothing contained herein shall create or be deemed to create any relationship between the Port Authority and any such performance of any part of the construction work and the Port Authority shall not be responsible to any of the foregoing for any payments due or alleged to be due thereto for any work performed or materials purchased in connection with the construction work.

(18) (i) Without limiting any of the terms and conditions of this Lease, the Lessee understands and agrees that it shall put into effect prior to the commencement of any construction work an affirmative action program and Minority Business Enterprise (MBE) program and Women-owned Business Enterprise (WBE) program in accordance with the provisions of Schedule E, attached hereto and hereby made a part hereof. The provisions of said Schedule E of this Lease shall be applicable to the Lessee's contractor or contractors and subcontractors at any tier of construction as well as to the Lessee itself and the Lessee shall include the provisions of said Schedule E within all of its construction contracts so as to make said provisions and undertaking the direct obligation of the construction contractor or contractors and subcontractors at any tier of construction. The Lessee shall and shall require its said contractor, contractors and subcontractors to furnish to the Port Authority such data, including but not limited to compliance reports relating to the operation and implementation of the affirmative action, MBE and WBE programs called for hereunder as the Port Authority may request at any time and from time to time regarding the affirmative action, Minority Business Enterprises and Women-owned Business Enterprises programs of the Lessee and its contractor, contractors, and subcontractors at any tier of construction, and the Lessee shall and shall also require that its contractor, contractors and subcontractors at any tier of construction make and put into effect such modifications and additions thereto as may be directed by the Port Authority pursuant to the provisions hereof and said Schedule E to effectuate the goals of affirmative action and Minority Business Enterprise and Women-owned Business Enterprise programs.

(ii) In addition to and without limiting any terms and provisions of this Lease, the Lessee shall provide in its contracts and all subcontracts covering the construction work or any portion thereof, that:

(aa) The contractor shall not discriminate against employees or applicants for employment because of race, creed, color, national origin, sex, age, disability or marital status, and shall undertake or continue existing programs of affirmative action to ensure that minority group persons are afforded equal employment opportunity without discrimination. Such programs shall include, but not be limited to, recruitment, employment, job assignment, promotion, upgrading, demotion, transfer, layoff, termination, rates of pay or other forms of compensation, and selections for training or retraining, including apprenticeships and on-the-job training;

(bb) At the request of either the Port Authority or the Lessee, the contractor shall request such employment agency, labor union, or authorized representative of workers with which it has a collective bargaining or other agreement or understanding and which is involved in the performance of the contract with the Lessee to furnish a written

statement that such employment agency, labor union or representative shall not discriminate because of race, creed, color, national origin, sex, age, disability or marital status and that such union or representative will cooperate in the implementation of the contractor's obligations hereunder;

(cc) The contractor will state, in all solicitations or advertisements for employees placed by or on behalf of the contractor in the performance of the contract, that all qualified applicants will be afforded equal employment opportunity without discrimination because of race, creed, color, national origin, sex, age, disability or marital status;

(dd) The contractor will include the provisions of subparagraphs (aa) through (cc) of this paragraph in every subcontract or purchase order in such a manner that such provisions will be binding upon each subcontractor or vendor as to its work in connection with the contract;

(ee) "Contractor" as used herein shall include each contractor and subcontractor at any tier of construction.

(19) In the performance of the Construction Work, the Lessee shall not exacerbate the existing environmental condition of the Premises, the Airport or any natural resource, including, without limitation, any ground water or aquifier.

(20) The Construction Work shall be performed in compliance with the provisions of the Sections of this Lease entitled "Compliance with Governmental Requirements" and "Rules and Regulations", and in accordance with all Environmental Requirements. Notwithstanding the foregoing, if any term or provision of this Lease imposes any requirement stricter of additional to Environmental Requirements, the Construction Work shall comply with such stricter or additional requirements, and references in this sub-division to "Environmental Requirements" shall be interpreted accordingly.

(21) Without in any way limiting the provisions of sub-division (20) above, the Construction Work shall comply with all of the following:

(i) Federal Aviation Administration AC 150/5370-10A "Standards for specifying construction of Airports", Item P-156 and AC/5320 _5B "Airport Drainage" and shall include a storm water pollution prevention plan which includes best management practices;

(ii) State Pollutant Discharge Elimination System ("SPDES") General Permit No. GP-0-10-001 for Storm water Discharges from Construction Activities, issued by the New York State Department of Environmental Conservation ("NYSDEC") on January 29, 2010; and

(iii) JFKIA SPDES Permit No. NY-0008109; and

(iv) The NYSDEC "No Further Action" letter, dated July 22, 2003 regarding Building 125, NYSDEC Spill Report No. 9830016, marked Exhibit D, attached hereto and hereby made a part hereof.

The Lessee shall comply with the following specific Environmental
ɜd to the Construction Work:

(i) *Remediation of Spills.* In the event that any Hazardous
ıscovered, uncovered, exposed, spilled, released, discharged or disposed on the
..essee, its employees, agents, contractors and subcontractors in the performance
.ion Work (any such event, a "**Spill**"), the Lessee shall immediately (w) notify the
of such Spill, (x) excavate all soil containing any such Hazardous Substances, (y)
t all ground water containing any such Hazardous Substances, and (z) remediate
he satisfaction of the Port Authority. Such pumping and treatment, or excavation,
ɜ until all such Hazardous Substances have been removed in accordance with
al Requirements. No Construction Work that would interfere or delay such
shall be performed in the area of such Spill until all such Hazardous Substances
o removed. Notwithstanding the foregoing, the Port Authority shall be responsible
.ediation of NYSDEC Open Spill # 95-03582. To the extent investigation and closure
ontinue into the term of the letting hereunder, such activities shall not unreasonably
ith the Lessee's use and occupancy of the premises, as more fully set forth in Section

(ii) *Reporting to Governmental Authority.* In reporting a Spill, the Lessee
ıow all Environmental Requirements and shall direct such report to the attention of such
al at the relevant Governmental Authority as the General Manager of the Airport may
in order to assure consistency in the environmental management of the Airport.

(iii) *Certificate of Final Disposal.* Promptly upon final disposition
lazardous Substance, the Lessee shall submit to the Port Authority a "Certification of
sposal" stating the type and amount of material disposed, the method of disposal and the
nd location of the disposal facility. The format of such certification shall follow the
ıents, if any, of Governmental Authorities having jurisdiction as if the Port Authority
rivate organization, provided, however, that in all events the name of the Port Authority
appear on any certificate or other document as a generator or owner of such

(iv) *Responsibility to Obtain NFA Status.* In all events, the Lessee shall
responsible for obtaining a No Further Action ("**NFA**") status from the DEC with
o all Spills reported to the DEC, and the Lessee shall complete all necessary remedia
monitoring and reporting necessary to obtain such NFA status. The Lessee shall be fully
ble for all costs associated with any long-term monitoring, reporting and closure
s relating to or resulting from such reported Spills both before and after the
ion Date.

(v) *Dewatering and Discharge of Wastewater.* (aa) The Port Authority
rants its permission to the Lessee to perform dewatering and discharge of
ter in connection with the Construction Work under the JFK SPDES
provided, however, that the Port Authority shall approve all dewatering
d practices prior to any discharge, and the Lessee shall comply with all the

terms and conditions of the JFK SPDES Permit and with all additional requirements of the DEC with respect to such dewatering activities and discharge of wastewater. The foregoing permission may be revoked by the Port Authority upon twenty-four (24) hours' notice to the Lessee if the Lessee fails, within five (5) days after the Lessee's receipt of notice of default from the Port Authority identifying the breach(es) of this sub-division paragraph (v), entitled "Dewatering and Discharge of Wastewater", to cure any such breach(es). (bb) The Lessee shall design and implement appropriate engineering practices and controls for all dewatering activities in the performance of the Construction Work to prevent contamination of the lower aquifer. (ccc) Dewatering and discharges shall be monitored and reported separately for each individual discharge point that comprises the Construction Work. Accordingly, separate monitoring systems shall be used to track dewatering and discharge activities performed in connection with the Construction Work. Upon the Port Authority's request at any time and from time to time, the Lessee shall provide additional samples and tests relating to the dewatering system. The Lessee shall keep full documentation of all ground water volumes treated, sampled and discharged, and shall provide all such documentation to the Port Authority. (dd) The Lessee shall install any and all treatment items requested or required by the DEC, the General Manager of the Airport or any approved Construction Application and/or indicated by water quality sampling results. All effluent shall meet the JFK SPDES Permit limits. (ee) In the event that the projected zone of influence of the Lessee's dewatering system is found to extend into any area outside of the Premises, the Lessee shall notify the Port Authority by submitting to the Resident Engineer for his review and approval the proposed dewatering design, which shall identify potentially affected non-pile supported structures and pavements which may be impacted by drawdown effects during dewatering operations. (ff) In the event that the Lessee's dewatering activities hereunder involve the use of wells, the Lessee shall, not later than ten (10) days after completion of dewatering activities and receipt of any approvals of a Governmental Authority, perform and complete a closure of all such wells in conformance with DEC requirements. The Lessee shall promptly notify both the Port Authority and the DEC of this action.

(vi) *Lessee's Environmental Professionals.* (aa) The Lessee shall designate, by written notice to the Port Authority given not later than five (5) days after the Lessee's execution of this Agreement, a duly authorized representative of the Lessee (the "**Lessee Environmental Representative**") who shall be responsible for the Lessee's compliance with the JFK SPDES Permit. (bb) Upon notice to the Lessee by the Port Authority, which may be given at any time upon any indication of non-compliance or potential non-compliance by the Lessee with the JFK SPDES Permit, the Lessee shall at its own expense immediately retain under contract, independent of the Lessee's construction contractor, a qualified environmental consultant approved by the Port Authority (the "**Lessee Environmental Consultant**"). The Lessee Environmental Consultant shall provide liaison with the Port Authority, and shall have the obligation to submit any and all reports, and any other requested information, directly to the Port Authority and to oversee installation, if applicable, of dewatering wells by a licensed driller, and to monitor contractor compliance with

all dewatering operations. The Lessee Environmental Consultant shall at all times be an independent contractor of the Lessee. The Port Authority shall not be responsible for any act or omission or fault or neglect of the Lessee's Environmental Consultant, nor shall the Port Authority have any liabilities or obligations of any kind to the Lessee Environmental Consultant, or any responsibility for any payments due or alleged to be due thereto. (ccc) The Lessee Environmental Representative and/or the Lessee Environmental Consultant shall promptly notify the Port Authority's Resident Engineer of the progress of scheduled activities, including initiation of dewatering activities, and shall provide weekly updates (by facsimile) on the activities at the Premises, including the status of dewatering activities (e.g.volumes removed, condition of waters).

(vii) *Lessee's Responsibility.* In addition to and without limitation as to the following subparagraph (viii) or any other term or provision of this Agreement, the Lessee shall be solely responsible for any and all fines, penalties, assessments, or levies assessed due to deviation from or violation of the JFK SPDES Permit or of the Lessee's authorization to discharge stormwater in the performance of the Construction Work during construction or of any other applicable permit, plan, authorization or permission. All design planning shall be in conformance with the requirements and conditions of the JFK SPDES Permit and applicable Environmental Requirements and of any other applicable permit, plan, authorization or permission, and the Lessee shall be responsible for complete compliance therewith.

(viii) *Lessee's Assumption of Risk.* The Lessee shall assume all risks arising out of its performance of dewatering and discharging of wastewater at any portion or area of the Premises under the JFK SPDES Permit issued or covered by the Port Authority or any other regulatory authority, or of any other applicable permit, plan, authorization or permission and, without limitation as to the generality of any other term or provision contained in this Agreement, the Lessee shall indemnify, hold harmless and reimburse the Port Authority, its Commissioners, officers, employees and representatives from and against (and shall reimburse the Port Authority for the Port Authority's costs and expenses, including without limitation legal costs and expenses incurred in connection with the defense of) all claims and demands, penalties, fines, liabilities (including without limitation strict liability), settlements, attorney and consultant fees, investigation and laboratory fees, cleanup and remediation costs, court costs and litigation expenses, damages, judgments, losses, costs and expenses, including without limitation claims for personal injury, including death, property damage and natural resources damage, of whatsoever kind or nature and whether known or unknown, contingent or otherwise, just or unjust, groundless or foreseeable or otherwise arising or alleged to arise out of, or in any way related to the Lessee's performance of dewatering or any discharging at any portion of the Premises or the Airport or the use of the JFK SPDES Permit by the Lessee or of any other applicable permit, plan, authorization or permission. If so directed, the Lessee shall at its own expense defend any suit based upon the foregoing, and in handling such it shall not, without obtaining express advance permission from the General Counsel of the Port Authority, raise any defense involving in any way the jurisdiction of the tribunal over the person of the Port Authority, the immunity of the Port Authority, its Commissioners, officers, agents or employees, the governmental nature of the Port Authority or the provisions of any statutes respecting suits against the Port Authority.

(d) (1) The construction work shall be constructed in such a manner that there will be at all times a minimum of air pollution, water pollution or any other type of pollution and a minimum of noise emanating from, arising out of or resulting from the operation, use or maintenance thereof by the Lessee and from the operations of the Lessee under this Agreement. Accordingly, and in addition to all other obligations imposed on the Lessee under this Agreement and without diminishing, limiting, modifying or affecting any of the same, the Lessee shall be obligated to construct as part of the construction work hereunder such structures, fences, equipment, storm water runoff collection and treatment systems, devices and other facilities as may be necessary or appropriate to accomplish the foregoing and each of the foregoing shall be and become a part of construction work it affects and all of the foregoing shall be covered under the comprehensive plan of the Lessee submitted under paragraph (a) hereof and shall be part of the construction work hereunder.

(2) Notwithstanding the provisions of subparagraph (1) above and in addition thereto, the Port Authority hereby reserves the right from time to time and at any time during the term of the Lease to require the Lessee, subsequent to the completion of the construction work to design and construct at its sole cost and expense such further reasonable structures, fences, equipment, storm water runoff collection and treatment systems, devices and other facilities as may be necessary or appropriate to accomplish the objectives as set forth in the first sentence of said Subparagraph (1). All locations, the manner, type and method of construction and the size of any of the foregoing shall be determined by the Port Authority. The Lessee shall submit for Port Authority approval its plans and specifications covering the required work and upon receiving such approval shall proceed diligently to construct the same. All other provisions of this Section 6 with respect to the construction work shall apply and pertain with like effect to any work which the Lessee is obligated to perform pursuant to this paragraph (d) and upon completion of each portion of such work it shall be and become a part of the construction work. The obligations assumed by the Lessee under this paragraph (d) are a special inducement and consideration to the Port Authority in granting this Lease to the Lessee.

(e) Title to all the construction work shall pass to the City of New York the same or any part thereof is erected, constructed or installed, and shall be and become a part of the premises if located within the site.

(f) (1) When the construction work is substantially completed and ready for use the Lessee shall advise the Port Authority to such effect and shall deliver to the Port Authority a certificate signed by an authorized officer of the Lessee and also signed by the Lessee's licensed architect or engineer certifying that the construction work has been constructed in accordance with the approval plans and specifications and the provisions of this Lease and in compliance with all applicable laws, ordinances and governmental rules, regulations and orders. Thereafter, the construction work will be inspected by the Port Authority and if the same has been completed as certified by the Lessee and the Lessee's licensed architect or engineer, as aforesaid, a certificate to such effect shall be delivered to the Lessee, subject to the condition that all risks thereafter with respect to the construction and installation of the same and any liability therefor for negligence or other reason shall be borne by the Lessee. The Lessee shall not use or permit the use of the construction work or any portion thereof for the purposes set forth in the

(d) (1) The construction work shall be constructed in such a manner that there will be at all times a minimum of air pollution, water pollution or any other type of pollution and a minimum of noise emanating from, arising out of or resulting from the operation, use or maintenance thereof by the Lessee and from the operations of the Lessee under this Agreement. Accordingly, and in addition to all other obligations imposed on the Lessee under this Agreement and without diminishing, limiting, modifying or affecting any of the same, the Lessee shall be obligated to construct as part of the construction work hereunder such structures, fences, equipment, storm water runoff collection and treatment systems, devices and other facilities as may be necessary or appropriate to accomplish the foregoing and each of the foregoing shall be and become a part of construction work it affects and all of the foregoing shall be covered under the comprehensive plan of the Lessee submitted under paragraph (a) hereof and shall be part of the construction work hereunder.

(2) Notwithstanding the provisions of subparagraph (1) above and in addition thereto, the Port Authority hereby reserves the right from time to time and at any time during the term of the Lease to require the Lessee, subsequent to the completion of the construction work to design and construct at its sole cost and expense such further reasonable structures, fences, equipment, storm water runoff collection and treatment systems, devices and other facilities as may be necessary or appropriate to accomplish the objectives as set forth in the first sentence of said Subparagraph (1). All locations, the manner, type and method of construction and the size of any of the foregoing shall be determined by the Port Authority. The Lessee shall submit for Port Authority approval its plans and specifications covering the required work and upon receiving such approval shall proceed diligently to construct the same. All other provisions of this Section 6 with respect to the construction work shall apply and pertain with like effect to any work which the Lessee is obligated to perform pursuant to this paragraph (d) and upon completion of each portion of such work it shall be and become a part of the construction work. The obligations assumed by the Lessee under this paragraph (d) are a special inducement and consideration to the Port Authority in granting this Lease to the Lessee.

(e) Title to all the construction work shall pass to the City of New York the same or any part thereof is erected, constructed or installed, and shall be and become a part of the premises if located within the site.

(f) (1) When the construction work is substantially completed and ready for use the Lessee shall advise the Port Authority to such effect and shall deliver to the Port Authority a certificate signed by an authorized officer of the Lessee and also signed by the Lessee's licensed architect or engineer certifying that the construction work has been constructed in accordance with the approval plans and specifications and the provisions of this Lease and in compliance with all applicable laws, ordinances and governmental rules, regulations and orders. Thereafter, the construction work will be inspected by the Port Authority and if the same has been completed as certified by the Lessee and the Lessee's licensed architect or engineer, as aforesaid, a certificate to such effect shall be delivered to the Lessee, subject to the condition that all risks thereafter with respect to the construction and installation of the same and any liability therefor for negligence or other reason shall be borne by the Lessee. The Lessee shall not use or permit the use of the construction work or any portion thereof for the purposes set forth in the

(d) (1) The construction work shall be constructed in such a manner that there will be at all times a minimum of air pollution, water pollution or any other type of pollution and a minimum of noise emanating from, arising out of or resulting from the operation, use or maintenance thereof by the Lessee and from the operations of the Lessee under this Agreement. Accordingly, and in addition to all other obligations imposed on the Lessee under this Agreement and without diminishing, limiting, modifying or affecting any of the same, the Lessee shall be obligated to construct as part of the construction work hereunder such structures, fences, equipment, storm water runoff collection and treatment systems, devices and other facilities as may be necessary or appropriate to accomplish the foregoing and each of the foregoing shall be and become a part of construction work it affects and all of the foregoing shall be covered under the comprehensive plan of the Lessee submitted under paragraph (a) hereof and shall be part of the construction work hereunder.

(2) Notwithstanding the provisions of subparagraph (1) above and in addition thereto, the Port Authority hereby reserves the right from time to time and at any time during the term of the Lease to require the Lessee, subsequent to the completion of the construction work to design and construct at its sole cost and expense such further reasonable structures, fences, equipment, storm water runoff collection and treatment systems, devices and other facilities as may be necessary or appropriate to accomplish the objectives as set forth in the first sentence of said Subparagraph (1). All locations, the manner, type and method of construction and the size of any of the foregoing shall be determined by the Port Authority. The Lessee shall submit for Port Authority approval its plans and specifications covering the required work and upon receiving such approval shall proceed diligently to construct the same. All other provisions of this Section 6 with respect to the construction work shall apply and pertain with like effect to any work which the Lessee is obligated to perform pursuant to this paragraph (d) and upon completion of each portion of such work it shall be and become a part of the construction work. The obligations assumed by the Lessee under this paragraph (d) are a special inducement and consideration to the Port Authority in granting this Lease to the Lessee.

(e) Title to all the construction work shall pass to the City of New York the same or any part thereof is erected, constructed or installed, and shall be and become a part of the premises if located within the site.

(f) (1) When the construction work is substantially completed and ready for use the Lessee shall advise the Port Authority to such effect and shall deliver to the Port Authority a certificate signed by an authorized officer of the Lessee and also signed by the Lessee's licensed architect or engineer certifying that the construction work has been constructed in accordance with the approval plans and specifications and the provisions of this Lease and in compliance with all applicable laws, ordinances and governmental rules, regulations and orders. Thereafter, the construction work will be inspected by the Port Authority and if the same has been completed as certified by the Lessee and the Lessee's licensed architect or engineer, as aforesaid, a certificate to such effect shall be delivered to the Lessee, subject to the condition that all risks thereafter with respect to the construction and installation of the same and any liability therefor for negligence or other reason shall be borne by the Lessee. The Lessee shall not use or permit the use of the construction work or any portion thereof for the purposes set forth in the

Lease until such certificate is received from the Port Authority and the Lessee shall not use or permit the use of the construction work or any portion thereof even if such certificate is received if the Port Authority states in any such certificate that the same cannot be used until other specified portions are completed.

(2) The term "Completion Date" for the purposes of this Lease shall mean the date appearing on the certificate issued by the Port Authority pursuant to subparagraph (1) of this paragraph (f).

(3) In addition to and without affecting the obligations of the Lessee under the preceding subparagraphs (1) and (2), when an integral and material portion of the construction work is substantially completed or is properly usable the Lessee may advise the Port Authority to such effect and may deliver to the Port Authority a certificate signed by an authorized officer of the Lessee and also signed by the Lessee's licensed architect or engineer certifying that such portion of the construction work has been constructed in accordance with the approved plans and specifications and the provisions of this Lease and in compliance with all applicable laws, ordinances and governmental rules, regulations and orders, and specifying that such portion of the construction work can be properly used even though the construction work has not been completed and that the Lessee desires such use. The Port Authority may in its sole discretion deliver a certificate to the Lessee with respect to each such portion of the construction work permitting the Lessee to use such portion thereof for the purposes set forth in the Lease. In such event the Lessee may use such portion subject to the condition that all risks thereafter with respect to the construction and installation of the same and any liability therefor for negligence or other reason shall be borne by the Lessee, and subject to the risks as set forth in paragraph (d) hereof in the event that the Port Authority shall not have then approved the complete plans and specifications for the construction work. Moreover, at any time prior to the issuance of the certificate required in subparagraph (1) above for the construction work, the Lessee shall promptly upon receipt of a written notice from the Port Authority cease its use of such portion of the construction work which it had been using pursuant to permission granted in this subparagraph (3).

(g) The Lessee understands that there may be communications and utility lines and conduits located on or under the site, which do not, and may not in the future, serve the premises. The Lessee agrees at its sole cost and expense, if directed by the Port Authority so to do, to relocate and reinstall such communications and utility lines and conduits on the site or off the site as directed by the Port Authority and to restore all affected areas (such work being hereinafter collectively called "the relocation work"). The Lessee shall perform the relocation work subject to and in accordance with all the terms and provisions of this Section 6 and the relocation work shall be and become a part of the construction work, it being understood, however, that the relocation work shall not be or become a part of the premises hereunder.

(h) The Lessee will give the Port Authority fifteen (15) days' notice prior to the commencement of construction. The Port Authority will assign a field engineer to the Construction Work for such periods of time as the Port Authority, in its sole discretion, shall deem desirable from time to time up to and including five (5) days per week. The Lessee shall pay to the Port Authority for the services of said engineer at the following daily rates (prorated

approximately for periods of less than one day): the rate of $975.00 per day for the period from January 1, 2012 to and including December 31, 2012; and at the rate of $1,010.00 per day for the period from January 2013 to and including December 31, 2013. Nothing herein shall prevent the Lessee from requesting the Port Authority to assign said engineer more frequently than as set forth herein, or the Port Authority from complying with such request, but the Port Authority shall not be obligated to do so. Nothing contained herein shall affect any of the provisions of paragraph (f) hereof or the rights of the Port Authority thereunder.

(i) Nothing contained in the Lease shall grant or be deemed to grant any contractor, architect, supplier, subcontractor or any other person engaged by the Lessee or any of its contractors in the performance of any part of the construction work any right of action or claim against the Port Authority, its Commissioners, officers, agents and employees with respect to any work any of them may do in connection with the construction work. Nothing contained herein shall create or be deemed to create any relationship between the Port Authority and any such contractor, architect, supplier, subcontractor or any other person engaged by the Lessee or any of its contractors in the performance of any part of the construction work and the Port Authority shall not be responsible to any of the foregoing for any payments due or alleged to be due thereto for any work performed or materials purchased in connection with the construction work.

Section 7. Ingress and Egress

(a) The Lessee, its officers, employees, customers, patrons, invitees, contractors, suppliers of material and furnishers of services, shall have the right of ingress and egress between the premises and a city street or public ways outside the Airport by means of such pedestrian roadways to be used in common with others having rights of passage within the Airport, provided, however, that the Port Authority may from time to time substitute other reasonably equivalent means of ingress and egress.

(b) The use of any such roadway shall be subject to the Rules and Regulations of the Port Authority which are now in effect or which may hereafter be promulgated for the safe and efficient operation of the Airport. The Port Authority may, at any time, temporarily or permanently close, or consent to or request the closing of any such roadway and any other area at the Airport presently or hereafter used as such, so long as a reasonable means of ingress and egress as provided in paragraph (a) above is concurrently made available to the Lessee. The Lessee hereby releases and discharges the Port Authority, its successors and assigns, of and from any and all claims, demands or causes of action which the Lessee may now or at any time hereafter have against any of the foregoing, arising or alleged to arise out of the closing of any street, roadway, or other area, whether within or outside the Airport.

Section 8. Compliance with Governmental Requirements

(a) The Lessee shall promptly observe comply with and execute the provisions of any and all present and future governmental laws, rules and regulations, orders, permits, Best Management Practice Plans, Storm Water Pollution Prevention Plans, Spill Prevention Control and Countermeasure Plans and directions which may pertain or apply to (i) the premises, (ii) the operations of the Lessee on the premises hereunder or the Airport, (iii) the occupancy or use of the premises or (iv) with regard to Environmental Requirements only, property outside the premises as a result of the Lessee's use and occupancy of the premises or a migration of Hazardous substances from the premises. The Lessee shall, in accordance with and subject to the provisions of Section 6 hereof, make any and all structural and non-structural improvements, alterations or repairs of the premises and perform all remediation work and clean up of Hazardous Substances required in order to fully satisfy the compliance obligations set forth herein.

(b) The Lessee shall procure from all governmental authorities having jurisdiction over the operations of the Lessee hereunder and shall maintain in full force and effect throughout the term of this Agreement all licenses, certificates, permits or other authorization, which may be necessary for the conduct of such operations. "Governmental authority" shall not be construed as intending to include the Port Authority of New York and New Jersey, the lessor under this Agreement.

(c) The obligation of the Lessee to comply with governmental requirements is provided herein for the purpose of assuring proper safeguards for the protection of persons and property on the premises. Such provision is not to be construed as a submission by the Port Authority to the application to itself of such requirements or any of them.

(d) Since the Port Authority has agreed in the Basic Lease to conform to the enactments, ordinances, resolutions and regulations of the City of New York and its various departments, boards and bureaus in regard to the construction and maintenance of buildings and structures and in regard to health and fire protection which would be applicable if the Port Authority were a private corporation to the extent that the Port Authority finds it practicable so to do, the Lessee shall comply with all such enactments, ordinances, resolutions and regulations which would be applicable to its operations hereunder if the Port Authority were a private corporation, except in cases where the Port Authority either notifies the Lessee that it need not comply with or directs it not to comply with any such enactments, ordinances, resolutions or regulations which are applicable only because of the Port Authority's agreement in the Basic Lease. The Lessee shall, for the Port Authority's information, deliver to the Port Authority promptly after receipt of any notice, warning, summons, or other legal process for the enforcement of any such enactment, ordinance, resolution or regulation a true copy of the same. Any direction by the Port Authority to the Lessee not to comply with any such enactment, ordinance, resolution or regulation shall be given only pursuant to a resolution duly adopted by the Board of Commissioners of the Port Authority or by an authorized committee of its Board and if any such direction is given by the Port Authority to the Lessee, the Port Authority, to the extent that it may lawfully do so, shall indemnify and hold the Lessee harmless from and against all claims, actions, damages, liabilities, fines, penalties, costs and expenses suffered or incurred

by the Lessee as a result of noncompliance with such enactment, ordinance, resolution or regulation.

(e) The Lessee shall have such time within which to comply with the aforesaid laws, ordinances, rules and regulations, as the authorities enforcing the same shall allow.

Section 9. Rules and Regulations

(a) The Lessee covenants and agrees to observe and obey (and to require its officers, employees, guests, invitees and those doing business with it to observe and obey) the Rules and Regulations of the Port Authority as now supplemented and now in effect, and such further rules and regulations (including amendments and supplements thereto) applying to the conduct and operations of the Lessee and others on the premises as may from time to time during the letting be promulgated by the Port Authority for reasons of safety, health, or the preservation of property, or for the maintenance of the good and orderly appearance of the premises, or for the safe or efficient operation of the Airport. The obligation of the Lessee to require such observance and obedience on the part of its guests, invitees and business visitors shall obtain only while such persons are on the premises. The Port Authority agrees that except in cases of emergency, it will give notice to the Lessee of every such future rule or regulation adopted by it at least five (5) days before the Lessee shall be required to comply therewith.

(b) If a copy of the Rules and Regulations is not attached, then the Port Authority will notify the Lessee thereof either by delivery of a copy, or by making a copy available at the office of the Secretary of the Port Authority.

Section 10. Various Obligations of the Lessee

(a) The Lessee shall conduct its operations hereunder in an orderly and proper manner, so as not to annoy, disturb or be offensive to others at the Airport. The Lessee shall take all reasonable measures to (1) eliminate vibrations tending to damage any equipment, structure, building or portion of a building which is on the premises, or is a part thereof, or is located elsewhere on the Airport, and (2) to keep the sound level of the operations as low as possible.

(b) The Lessee shall, control the conduct, demeanor and appearance of its employees and invitees and of those doing business with it, and upon objection from the Port Authority concerning the conduct, demeanor or appearance of any such shall immediately take all lawful steps necessary to remove the cause of the objection. If requested by the Port Authority the Lessee shall supply and shall require its employees to wear or carry badges or other suitable means of identification, which shall be subject to the prior and continuing approval of the General Manager of the Airport.

(c) The Lessee shall control all vehicular traffic on the roadways or other areas within the premises and shall take all precautions necessary to promote the safety of its patrons and other persons using such roadways and other areas. The Lessee shall employ such

means as may be necessary to direct the movement of vehicular traffic within the premises to prevent traffic congestion on the public roadways leading to the premises.

(d) The Lessee shall daily remove from the Airport by means of facilities provided by it all garbage, debris, and other waste material (whether solid or liquid) arising out of or in connection with its operations hereunder. Any such which may be temporarily stored in the open shall be kept in suitable garbage and waste receptacles, the same to be made of metal or other suitable material, and equipped with tight-fitting covers, and to be of a design safely and properly to contain whatever material may be placed therein; said receptacles being provided and maintained by the Lessee. The receptacles shall be kept covered except when filling or emptying the same. The Lessee shall use extreme care when effecting removal of all such waste material, and shall effect such removal at such times and by such means as first approved by the Port Authority. No facilities of the Port Authority shall be used for such removal unless with its prior consent in writing. No such garbage, debris, or other waste materials shall be or be permitted to be thrown, discharged or deposited into or upon the waters at or bounding the Airport.

(e) From time to time and as often as reasonably required by the Port Authority, the Lessee shall conduct pressure, water-flow, and other appropriate tests of the fire-extinguishing system and apparatus which constitute a part of the premises. The Lessee shall keep in proper functioning order all fire-fighting equipment on the premises and the Lessee shall at all times maintain on the premises adequate stocks of fresh, usable chemicals for use in such system, apparatus and equipment. The Lessee shall notify the Port Authority prior to conducting such tests. If requested by the Port Authority, the Lessee shall furnish the Port Authority with a copy of written reports of such tests.

(f) In addition to compliance by the Lessee with all laws, ordinances, governmental rules, regulations, permits and orders now or at any time in effect during the term of the letting hereunder which as a matter of law are applicable to the operation, use or maintenance by the Lessee of the premises or the operations of the Lessee under this Agreement (the foregoing not to be construed as a submission by the Port Authority to the application to itself of such requirements or any of them), the Lessee agrees that it shall exercise the highest degree of safety and care and shall conduct all its operations under this Agreement and shall operate, use and maintain the premises in accordance with the highest standards of the automotive service station industry and in such manner that there will be at all times a minimum of air pollution, water pollution or any other type of pollution and a minimum of noise emanating from, arising out of or resulting from the operation, use or maintenance of the premises by the Lessee and from the operations of the Lessee under this Agreement. The Port Authority hereby reserves the right from time to time and at any time during the term of the Lease to require the Lessee, and the Lessee agrees, to design and construct at its sole cost and expense such reasonable structures, fences, equipment, devices and other facilities as may be necessary or appropriate to accomplish the objectives as set forth in the first sentence of this paragraph. All locations, the manner, type and method of construction and the size of any of the foregoing shall be determined by the Port Authority. The Lessee shall submit for Port Authority approval its plans and specifications covering the required work and upon receiving such approval shall proceed diligently to construct the same.

The obligations assumed by the Lessee under this paragraph (f) shall continue throughout the term of this Lease and shall not be limited, affected, impaired or in any manner modified by the fact that the Port Authority shall have approved any Construction Application and supporting plans, specifications and contracts covering construction work and notwithstanding the incorporation therein of the Port Authority's recommendations or requirements and notwithstanding that the Port Authority may have at any time during the term of the Lease consented to or approved any particular procedure or method of operation which the Lessee may have proposed, or the Port Authority may have itself prescribed the use of any procedure or method.

(g) The Lessee shall periodically inspect, clean out and maintain the oil separators serving the premises which are located on the premises, if any, and the oil separators located outside the premises, if any, if they exclusively service the premises. In connection therewith, during each annual period hereunder, the Lessee shall provide to the Port Authority a copy of its Spill Prevention Counter Measure and Controls Plan ("SPCC") to the JFK Environmental Manager.

(h) Without limiting any other of the Lessee's operations under the Lease, the Lessee shall provide the General Manager of the Airport at the cost and expense of the Lessee with such information, documentation, records, correspondence, notices, reports, tests, results, and certifications and any other information as the Port Authority shall request in connection with any Environmental Requirements or Environmental Damages, and the Lessee shall promptly acknowledge, swear to, sign or otherwise fully execute the same. The Lessee agrees that any of the foregoing may be filed by the Port Authority with the appropriate governmental authority on behalf of the Lessee at the Lessee's cost and expense. Further, the Lessee agrees unless directed otherwise by the Port Authority, to provide the General Manager of the Airport with copies of all information, documentation, records, correspondence, notice, certifications, reports, test results and all other submissions provided by the Lessee to a governmental authority and by a governmental authority to the Lessee within two (2) business days that the same are made available to or received by the Lessee with respect to any Environmental Requirements, including, without limitation, a copy of the SPCC Plan.

(i) In addition to and without limiting the generality of the obligations of the Lessee set forth above and elsewhere in the Lease, the Lessee shall at its sole cost and expense and in accordance with and subject to the provisions of Section 6 hereof, upon notice from the Port Authority, promptly take all actions to completely remove and remediate all Hazardous Substances on the premises or the Airport which result from the Lessee's use and occupancy of the premises or which have been disposed of, released, discharged or otherwise placed on, under or about the premises during the term of the letting hereunder, and to cleanup and remediate all other Hazardous Substances on, about or under the premises or which have migrated from the premises to any adjoining property, which any federal, state or local governmental agency or political subdivision or any Environmental Requirement or any violation thereof require to be remediated, and to cleanup and remediate all Hazardous Substances necessary to mitigate Environmental Damages. The foregoing obligations of the Lessee shall include without limitation the investigation of the environmental condition of the area to be remediated, the presentation of feasibility studies, reports and remedial plans and the performance of any

cleanup, remediation, containment, operation, maintenance, monitoring or restoration work; the standard for any of the foregoing to be that standard as required under Environmental Requirements and in the event that any Environmental Requirement sets forth more than one standard, the standard to be applied shall be that which requires the lowest level of a Hazardous Substance. The Lessee agrees that, notwithstanding the foregoing, the Port Authority shall have the right at any time and from time to time, acting in its sole discretion, to designate any standard or standards of remediation or cleanup permitted or required under any Environmental Requirement, and such designation shall be binding upon the Lessee with respect to its obligations hereunder. Any actions of the Lessee under the foregoing shall be performed in a good, safe and workmanlike manner and shall minimize any impact on activities off the premises. The Lessee shall promptly provide to the Port Authority all copies of test results and reports generated in connection with such actions. Promptly upon completion of such investigation and remediation, the Lessee shall seal or cap all monitoring wells and test holes, remove all associated equipment and restore the remediated property.

Section 11. Prohibited Acts

(a) The Lessee shall commit no unlawful nuisance, waste or injury on the premises or at the Airport, and shall not do or permit to be done anything which may result in the creation or commission or maintenance of such nuisance, waste or injury on the premises.

(b) The Lessee shall not create nor permit to be caused or produced upon the premises, to permeate the same or to emanate therefrom any unusual, noxious or objectionable smokes, gases, vapors or odors except such as are necessarily incidental to the normal operations of the Lessee in the conduct of its operations granted under Section 3 of this Agreement.

(c) The Lessee shall not do or permit to be done anything which may interfere with the effectiveness or accessibility of the drainage and sewer system, water system, communications system, electrical system, fire protection system, sprinkler system, alarm system, fire hydrants and hoses and other systems, if any, installed or located on, under, or in the premises.

(d) The Lessee shall not do or permit to be done any act or thing upon the premises or at the Airport (1) which will invalidate or prevent the issuance of or conflict with any fire insurance, extended coverage or rental insurance policies covering the premises or any part thereof, or the Airport, or any part thereof, or (2) which, in the opinion of the Port Authority, may constitute an extra-hazardous condition, so as to increase the risks normally attendant upon the operations contemplated by Section 3 hereof. The Lessee shall promptly observe, comply with and execute the provisions of any and all present and future rules and regulations, requirements, orders and directions of the Insurance Services Office of New York, or of any other board or organization exercising or which may exercise similar functions, which may pertain or apply to the operations of the Lessee on the premises, and the Lessee shall, subject to and in accordance with the provisions of Section 6 hereof, make any and all structural and non-structural improvements, alterations or repairs of the premises that may be required at any time hereafter by any such present or future rule, regulation, requirement, order or direction. If by reason of any failure on the part of the Lessee to comply with the provisions of this paragraph

any fire insurance rate, extended coverage or rental insurance rate on the premises or any part thereof, or on the Airport or any part thereof, shall at any time be higher than it would be if the premises were properly used for the purposes permitted by Section 3 hereof, then the Lessee shall pay to the Port Authority, as an item of additional rental, that part of all insurance premiums paid by the Port Authority which shall have been charged because of such violation or failure by the Lessee.

(e) The Lessee shall not dispose of nor permit any one to dispose of any waste material (whether liquid or solid) by means of toilets, manholes, sanitary sewers or storm sewers in the premises or on the Airport except after treatment in installations or equipment included in plans and specifications submitted to and approved by the Port Authority.

(f) Unless otherwise expressly permitted to do so in Section 3 hereof, the Lessee shall not install, maintain or operate, or permit the installation, maintenance or operation on the premises of any vending-machine or device designed to dispense or sell food, beverages, tobacco, tobacco products or merchandise of any kind, whether or not included in the above categories, or of any restaurant, cafeteria, kitchen, stand or other establishment of any type for the preparation, or dispensing or sale of food, beverages, tobacco, tobacco products or merchandise of any kind, whether or not included in the above categories, or of any equipment or device for the furnishing to the public of service of any kind.

(g) The Port Authority by itself, or by contractors, lessees or permittees, shall have the exclusive right to install, maintain and receive the revenues from all coin-operated or other vending machines or devices installed by it and operated on the premises for the sale of merchandise of all types or for the rendering of services, provided, however, that no such machine or device shall be installed except upon the request of the Lessee. If the Port Authority does not install and maintain any such machine that the Lessee may request, the Lessee shall have the right to do so, provided, however, (1) that the Lessee shall pay or cause to be paid to the Port Authority each month for each machine upon the same basis for the preceding month as any concessionaire, permittee or licensee of the Port Authority then operating machines at the Airport for the sale of similar merchandise or the rendering of similar services, and (2) that in the event the Lessee exercises such right the Port Authority, at any time thereafter, may substitute for the Lessee's machines other machines selling similar merchandise or services operated by the Port Authority or by its licensee, permittee or concessionaire, and thereupon the Lessee shall remove its machines.

(h) The Lessee shall not keep or store during any 24-hour period flammable liquids within any enclosed portion of the premises (other than in rooms or areas expressly constructed for the storage of such liquids) in excess of the Lessee's working requirements during the said 24-hour period. Any such liquids having a flash point of less than 110 degrees Fahrenheit shall be kept and stored in safety containers of a type approved by the Underwriters Laboratories or the Factory Mutual Insurance Association. Further, the Lessee shall provide to the Port Authority copies of the Lessee's annual Tier II filings made pursuant to the New York City Department of Environmental Protection's ("NYCDEP") Community Right-to Know Program.

(i) The Lessee shall not start or operate any engine or any item of automotive equipment in any enclosed space on the premises unless such space is adequately ventilated and unless such engine is equipped with a proper spark-arresting device which has been approved by the Port Authority.

(j) The Lessee shall not overload any floor and shall repair any floor, including supporting members, and any paved area damaged by overloading. Nothing in this paragraph (j) or elsewhere in this Agreement shall be or be construed to be a representation by the Port Authority of the weight any floor or paved area will bear.

(k) Except as provided in paragraph (h) hereof, the Lessee shall not keep or store in the premises, explosives, inflammable liquids or solids or oxidized materials or use any cleaning materials having a harmful corrosive effect, on any part of the premises.

(l) The Lessee shall not fuel or defuel any automotive vehicles or other equipment in the enclosed portions of the premises without prior approval of the General Manager of the Airport, provided, however, that the Lessee shall not be prohibited from using gasoline or other fuel in such enclosed portions where necessary in repairing or testing component parts, and in such event the Lessee shall take all precautions reasonably necessary to minimize the hazard created by such use.

(m) The Lessee shall not dispose of, release or discharge nor permit anyone to dispose of, release or discharge any Hazardous Substance on the premises or at the Airport. Any Hazardous Substance disposed of, released or discharged by the Lessee (or permitted by the Lessee to be disposed of, released or discharged) on the premises or at the Airport, shall upon notice by the Port Authority to the Lessee and subject to the provisions of Section 6 hereof, be completely removed and/or remediated by the Lessee. The obligations of the Lessee pursuant to this paragraph (m) shall survive the expiration or termination of this Agreement.

Section 12. Care, Maintenance, Rebuilding and Repair by the Lessee

(a) The Lessee shall repair, replace, rebuild and paint all or any part of the Airport which may be damaged or destroyed by the acts or omissions of the Lessee or by those of its employees, customers, guests or invitees or of other persons doing business with the Lessee.

(b) The Lessee shall, throughout the term of this Lease, assume the entire responsibility and shall relieve the Port Authority from all responsibility for all repair, rebuilding and maintenance whatsoever in the premises, whether such repair, rebuilding or maintenance be ordinary or extraordinary, partial or entire, inside or outside, foreseen or unforeseen, structural or otherwise, and without limiting the generality of the foregoing, the Lessee shall:

(1) Keep at all times in a clean and orderly condition and appearance, the premises and all the Lessee's fixtures, equipment and personal property which are located in any part of the premises which is open to or visible by the general public;

(2) Remove all snow and ice and perform all other activities and functions necessary or proper to make the premises available for use by the Lessee;

(3) Take good care of the premises and maintain the same at all times in good condition; perform all necessary preventive maintenance, including but not limited to painting (the exterior of the structures on the premises and areas visible to the general public to be painted only in colors which have been approved by the Port Authority); and make all repairs and replacements, and do all rebuilding, inside and outside, ordinary and extraordinary, structural or otherwise, which repairs, rebuilding and replacements by the Lessee shall be of good quality as to workmanship and material, and to pay promptly the cost and expense of such repairs, rebuilding replacements and maintenance.

(4) Without limiting its obligations elsewhere in this Section, the Lessee shall perform all decorating and painting (including redecorating and repainting) so that at all times the premises and all parts thereof are in first class appearance and condition;

(5) Provide and maintain all obstruction lights and similar devices, and provide and maintain all fire protection and safety equipment and all other equipment of every kind and nature required by any law, rule, ordinance, resolution or regulation of the type and nature described in Section 8 of this Agreement. The Lessee shall enter into and keep in effect throughout the term of the Lease a contract or contracts with a central station alarm company acceptable to the Port Authority to provide continuous and automatic surveillance of the fire protection system on the premises. The Lessee shall insure that all fire alarm signals with respect to the premises shall also be transmitted to the Airport's police emergency alarm board or to such other location on the Airport as the General Manager of the Airport may direct. The Lessee's obligations hereunder shall in no way create any obligation whatsoever on the part of the Port Authority;

(6) Take such anti-erosion measures and maintain the landscaping at all times in good condition, including but not limited to periodic planting, as the Port Authority may require, and perform and maintain such other landscaping with respect to all portions of the premises not paved or built upon as the Port Authority may require.

(7) Be responsible for the maintenance and repair of all service and utility lines, including but not limited to, service lines for the supply of water, compressed natural gas, electrical power and telephone conduits and lines, sanitary sewers and storm sewers located upon the premises or located adjacent to the premises and serving the premises leased to the Lessee or off the premises.

(8) Promptly wipe up all oil, gasoline, grease, lubricants and other flammable liquids or substances having a corrosive or detrimental effect on the paving or other surface of the premises, which may leak or be spilled thereon. Repair any damage to the paving or other surface of the premises caused by any oil, gasoline, grease, lubricants or other liquids and substances having a corrosive or detrimental effect thereon.

(9) From time to time and as often as reasonably required by the Port Authority, the Lessee shall conduct pressure, water flow, and other appropriate tests of the fire extinguishing system and apparatus which constitutes a part of the premises.

(c) In the event the Lessee fails to commence so to maintain, clean, repair, replace, rebuild or paint within a period of twenty (20) days after notice from the Port Authority so to do in the event that the said notice specifies that the required work to be accomplished by the Lessee includes maintenance and/or repair other than preventive maintenance; or within a period of one hundred eighty (180) days if the said notice specifies that the work to be accomplished by the Lessee involves preventive maintenance only, or fails diligently to continue to completion the repair, replacement, lamping and relamping, rebuilding or painting of all of the premises required to be repaired, replaced, rebuilt, restored or painted by the Lessee under the terms of this Agreement, the Port Authority may, at its option and in addition to any other remedies which may be available to it, clean, maintain, repair, replace, lamp or revamp, rebuild or paint or repaint or restore all or any part of the premises included in the said notice, and the cost thereof shall be payable to the Port Authority by the Lessee upon demand.

Section 13. Insurance

(a) The Lessee shall during the term of this Agreement, insure and keep insured to the extent of 100% of the replacement value thereof, all buildings, structures, improvements, installations, facilities and fixtures now or in the future located on the premises against such hazards and risks as may now or in the future be included under the Standard Form of Fire Insurance Policy of the State of New York and also against damage or loss by windstorm, cyclone, tornado, hail, explosion, riot, civil commotion, aircraft, vehicles and smoke, under the Standard Form of Fire Insurance Policy of New York and the form of extended coverage endorsement prescribed as of the effective date of the said insurance by the Rating Organization having jurisdiction, and also covering contamination hazards and risks and boiler and machinery hazards and risks in a separate insurance policy or policies or as an additional coverage endorsement to the aforesaid policies in the form as may now or in the future be prescribed as of the effective date of said insurance by the Rating Organization having jurisdiction and/or the Superintendent of Insurance of the State of New York and the Lessee shall furthermore provide additional insurance with respect to the premises covering any other property risk that the Port Authority may at any time during the term of this Agreement cover by carrier or self-insurance covered by appropriate reserves at other locations at the Airport upon written notice to the Lessee to such effect.

(b) The aforesaid insurance coverage's and renewals thereof shall insure the Port Authority, the Lessee and the City of New York, as their interests may appear, and shall provide that the loss, if any, shall be adjusted with and payable to the Port Authority.

(c) In the event the premises or any part thereof shall be damaged by any casualty against which insurance is carried pursuant to this Section 13, the Lessee shall promptly furnish to the Port Authority such information and data as may be necessary to enable the Port Authority to adjust the loss.

(d) The policies or certificates representing insurance covered by this Section 13 shall be delivered by the Lessee to the Port Authority upon execution of this Agreement by the Lessee and each policy or certificate delivered shall bear the endorsement of or be accompanied by evidence of payment of the premium thereon and, also, shall contain a valid provision obligating the insurance company to furnish the Port Authority and the City of New York ten (10) days' advance notice of the cancellation, termination, change or modification of the insurance evidenced by said policy or certificate. Renewal policies or certificates shall be delivered to the Port Authority at least ten (10) days before the expiration of the insurance which such policies are to renew.

(e) Regardless, however, of the persons whose interests are insured, the proceeds of all policies covered by this Section 13 shall be applied as provided in Section 15; and the word "insurance" and all other references to insurance in said Section 15 shall be construed to refer to the insurance which is the subject matter of this Section 13, and to refer to such insurance only.

(f) The insurance covered by this Section 13 shall be written by companies approved by the Port Authority. If at any time any of the insurance policies shall be or become unsatisfactory to the Port Authority as to form or substance or if any of the carriers issuing such policies shall be or become unsatisfactory to the Port Authority, the Lessee shall promptly obtain a new and satisfactory policy in replacement. If the Port Authority at any time so requests, a certified copy of each of said policies shall be delivered to the Port Authority.

Section 14. Damage to or Destruction of Premises

(a) Removal of Debris. If the premises, or any part thereof, shall be damaged by fire, the elements, the public enemy or other casualty, the Lessee shall promptly remove all debris resulting from such damage from the premises, and to the extent, if any, that the removal of debris under such circumstances is covered by insurance, the proceeds thereof shall be available to and be used by the Lessee for that purpose.

(b) Minor Damage. If the premises, or any part thereof shall be damaged by fire, the elements, the public enemy or other casualty but not rendered untreatable or unusable for a period of ninety (90) days, the premises shall be repaired with due diligence in accordance with the plans and specifications for the premises as they existed prior to such damage by and at the expense of the Lessee and if such damage is covered by insurance, the proceeds thereof shall be made available to and be used by the Lessee for that purpose.

(c) Major Damage to or Destruction of the Premises. If the premises, or any part thereof shall be destroyed or so damaged by fire, the elements, strikes, riots, civil commotion or other casualty as to be untreatable or unusable for ninety (90) days, or if within ninety (90) days after such damage or destruction the Lessee notifies the Port Authority in writing that in its opinion said premises will be untreatable or unusable for ninety (90) days then: The Lessee shall proceed with due diligence to make the necessary repairs or replacements to restore such premises in accordance with the plans and specifications for the premises as the same existed prior to such damage or destruction; or with the approval in writing of the Port

Authority make such other repairs, replacements or changes as may be desired by the Lessee. If such destruction or damage was covered by insurance, the proceeds thereof shall be made available to and be used by the Lessee for such restoration.

(d) The obligation of the Lessee to repair or replace shall be limited to the amount of the insurance proceeds provided the Lessee has carried insurance to the extent and in accordance with Section 13 hereof. Any excess of the proceeds of insurance over costs of the restoration shall be retained by the Port Authority.

(e) The parties hereby stipulate that the foregoing provisions of this Section 14 constitute an "express agreement to the contrary" under Section 227 of the Real Property Law of New York, and therefore neither the provisions of Section 227 of the Real Property Law of New York nor those of any other similar statute shall extend or apply to this Agreement.

Section 15. Indemnity and Liability Insurance

(a) (1) The Lessee shall indemnify and hold harmless the Port Authority, its Commissioners, officers, employees and representatives, from and against (and shall reimburse the Port Authority for the Port Authority's costs and expenses including legal expenses incurred in connection with the defense of) all claims and demands third persons (including employees, officers and agents of the Port Authority including but not limited to claims and demands for death or personal injuries, or for property damages, arising out of any default of the Lessee in performing or observing any term or provision of this Agreement, or out of the use or occupancy of the premises by the Lessee or by others, with its consent or out of any acts or omissions of the Lessee, its officers, employees, guests, representatives, customers, contractors, invitees, business visitors and other persons who are doing business with the Lessee or who are on the premises with the consent of the Lessee, or arising out of the acts or omissions of the Lessee, its officers and employees elsewhere at the Airport, including claims and demands of the City of New York from which the Port Authority derives its rights in the Airport, for indemnification, arising by operation of law or through agreement of the Port Authority with the said City.

(2) If so directed, the Lessee shall at its own expense defend any suit based upon any such claim or demand (even if such claim or demand is groundless, false or fraudulent) and in handling such it shall not, without obtaining express advance permission from the General Counsel of the Port Authority, raise any defense involving in any way the jurisdiction of the tribunal, the immunity of the Port Authority, its Commissioners, officers, agents or employees, the governmental nature of the Port Authority, or the provisions of any statutes respecting suits against the Port Authority.

(b) In addition to the obligations set forth in paragraph (a) of this Section and all other insurance required under this Agreement, the Lessee prior to any occupancy of the premises and thereafter during the term of this Agreement, in its own name as insured and including the Port Authority and the City of New York as insureds, shall maintain and pay the premiums in accordance with the provisions of Section 6 of this Agreement. Prior to any use of the premises, and thereafter during the term of this Agreement, the Lessee shall, in its own name as insured and including the Port Authority and the City of New York as insureds, maintain and

pay the premiums during the term of this Agreement on a policy or policies of Comprehensive General Liability Insurance covering the Lessee's operations hereunder, including but not limited to Products Liability, premises-operations and completed operations, and covering bodily injury, including death and property damage liability, and Garage Liability (with automobile hazard 2 coverage), Garage Keepers Legal Liability, none of the foregoing to contain care, custody or control exclusions (endorsed to include all risks of physical loss and damage including lift collision coverage and collision and upset coverage in limits sufficient to cover vehicles and other property in the care, custody and control of the Lessee), and Comprehensive Automobile Liability Insurance covering owned, non-owned and hired vehicles, and including automatic coverage for newly-acquired vehicles, and all applicable requirements for underground storage tanks including the Federal Financial Responsibility Requirements. Such policy or policies shall include Garage Liability (with automobile hazard two coverage's, Garage Keepers Legal Liability in the comprehensive form to cover all risk, including, but not limited to (i) fire and explosion, (ii) theft of partial or entire vehicle, (iii) riot and/or vandalism, and (iv) coverage for collision or upset and Environmental Impairment Liability Insurance coverage covering the Lessee's legal liability, including clean up. The said policies of insurance shall also provide or contain a contractual liability endorsement covering the obligations assumed by the Lessee under paragraph (a) of this Section.

The Lessee shall also take out and maintain in its own name and at it own cost and expense:

(1)	Comprehensive Automobile Liability Policy:	Minimum Limit
	(aa) For bodily injury to or wrongful death of one person:	$10,000,000
	(bb) For bodily injury to or wrongful death to more than one person in any one occurrence:	$10,000,000
	(cc) Property Damage Liability	
	For all damage arising out of injury to or destruction of property in any one occurrence:	$10,000,000
(2)	Comprehensive Liability	Minimum Limit
	(aa) Bodily Injury Liability	
	For injury to or wrongful death to one person:	$10,000,000
	For injury or wrongful death to more than one person in	

any one occurrence:	$10,000,000
(bb) Property Damage Liability For all damage arising out of injury to or destruction of property in any one occurrence:	$10,000,000
(cc) Products Liability/Completed Completed Operations:	$10,000,000
(3) Workers' Compensation Insurance	
(4) Employers Liability Insurance in compliance with all applicable laws	$1,000,000
(5) Garage Keeper's Legal Liability Insurance	$ 500,000
(6) Environmental Liability Insurance	$5,000,000

Without limiting the provisions hereof, in the event the Lessee maintains the foregoing insurance in limits greater than aforesaid, the Port Authority shall be included therein as an additional insured to the full extent of all such insurance in accordance with all the terms and conditions hereof.

The said policy or policies or insurance shall also provide or contain an endorsement providing that the protections afforded the Lessee thereunder with respect to any claim or action against the Lessee by a third person shall pertain and apply with like effect with respect to any claim or action against the Lessee by the Port Authority, and shall also provide or contain an endorsement providing that the protections afforded the Port Authority hereunder and with respect to any claim or action against the Port Authority by the Lessee shall be the same as the protections afforded the Lessee thereunder with respect to any claim or action against the Lessee by a third person as if the Port Authority were the named insured thereunder, but such endorsement shall not limit, vary, change, or affect the protections afforded the Port Authority thereunder as an additional insured.

All insurance coverage's and policies required under this Section may be reviewed by the Port Authority for adequacy of terms, conditions and limits of coverage at any time and from time to time during the term of the letting hereunder. The Port Authority may, at any such time, require additions, deletions, amendments or modifications to the above-scheduled insurance requirements, or may require such other and additional insurance, in such reasonable amounts, against such other insurable hazards, as the Port Authority may deem required and the Lessee shall promptly comply therewith.

(c) As to the insurance required by the provisions of this Section, a certified copy of each of the policies or a certificate or certificates evidencing the existence thereof, or

binders, shall be delivered to the Port Authority upon execution of this Agreement by the Lessee. In the event any binder is delivered it shall be replaced within thirty (30) days by a certified copy of the policy or a certificate. Each such copy or certificate shall contain a valid provision or endorsement that the policy may not be cancelled, terminated, changed or modified without giving thirty (30) days' written advance notice thereof to the Port Authority. Each such copy or certificate shall contain an additional endorsement providing that the insurance carrier shall not, without obtaining express advance permission from the General Counsel of the Port Authority, raise any defense involving in any way the jurisdiction of the tribunal over the person of the Port Authority, the immunity of the Port Authority, its Commissioners officers, agents or employees, the governmental nature of the Port Authority or the provisions of any statutes respecting suits against the Port Authority. Any renewal policy shall be delivered to the Port Authority at least fifteen (15) days prior to the expiration of each expiring policy, except for any policy expiring after the date of expiration of the term of this Agreement. The aforesaid insurance shall be written by a company or companies approved by the Port Authority, the Port Authority agreeing not to withhold its approval unreasonably. If at any time any of the insurance policies shall be or become unsatisfactory to the Port Authority as to form or substance or if any of the carriers issuing such policies shall be or become unsatisfactory to the Port Authority, the Lessee shall promptly obtain a new and satisfactory policy in replacement. If the Port Authority at any time so requests, a certified copy of each of the policies shall be delivered to the Port Authority.

Section 16. Signs

(a) Except with the prior written approval of the Port Authority, the Lessee shall not erect, maintain or display any signs or any advertising at or on the exterior parts of the premises or in the premises so as to be visible from outside the premises or at or on any other portion of the Airport outside the premises. Interior signs affecting public safety and security shall be in accordance with established Port Authority standards. The port Authority agrees to provide directional signage on the roadways of the Airport in such locations, as determined in the sole discretion of the Port Authority, to apprise the general public of the Lessee's business at the Premises.

(b) Upon the expiration or termination of the letting, the Lessee shall remove, obliterate or paint out, as the Port Authority may direct, any and all signs and advertising on the premises or elsewhere on the Airport, and in connection therewith shall restore the portion of the premises and the Airport affected by such signs or advertising to the same condition as existing at the commencement of the letting. In the event of a failure on the part of the Lessee so to remove, obliterate or paint out each and every such sign or advertising and so to restore the premises and the Airport, the Port Authority may perform the necessary work and the Lessee shall pay the cost thereof to the Port Authority on demand.

Section 17. Obstruction Lights

The Lessee shall install, maintain and operate at its own expense such obstruction lights on the premises as the Federal Aviation Administration may direct or as the General Manager of the Airport may reasonably direct, and shall energize such lights daily for a period commencing thirty (30) minutes before sunset and ending thirty (30) minutes after sunrise (as

sunset and sunrise may vary from day to day throughout the year) and for such other period as may be directed or requested by the Control Tower of the Airport.

Section 18. Additional Rent and Charges

(a) If the Port Authority has paid any sum or has incurred any obligation or expense which the Lessee has agreed to pay or reimburse the Port Authority for or if the Port Authority is required or elects to pay any sum or sums or incurs any obligations or expense by reason of the failure, neglect or refusal of the Lessee to perform or fulfill any one or more of the conditions, covenants or agreements contained in this Agreement or as a result of an act or omission of the Lessee contrary to the said conditions, covenants and agreements, the Lessee agrees to pay the sum or sums so paid or the expense so incurred, including all interest, costs, damages and penalties, and the same may be added to any installment of rent thereafter due hereunder, and each and every part of the same shall be and become additional rent, recoverable by the Port Authority in the same manner and with like remedies as if it were originally a part of the rent as set forth in Section 4 hereof.

(b) For all purposes under this Section and in any suit, action or proceeding of any kind between the parties hereto, any receipt showing payment of any sum or sums by the Port Authority for any work done or material furnished shall be prima facie evidence against the Lessee that the amount of such payment was necessary and reasonable. Should the Port Authority elect to use its operating and maintenance staff and/or its own materials in making any repairs, replacements, and/or alterations required of the Lessee under this Agreement and to charge the Lessee with the cost of same, any time report of any employee of the Port Authority showing hours of labor or work allocated to any such repair, replacement and/or alteration, or any stock requisition of the Port Authority showing the issuance of materials for use in the performance thereof, shall likewise be prima facie evidence against the Lessee that the amount of such charge was necessary and reasonable.

Section 19. Rights of Entry Reserved

(a) The Port Authority, by its officers, employees, agents, representatives and contractors shall have the right at all reasonable times to enter upon the premises for the purpose of inspecting the same, for observing the performance by the Lessee of its obligations under this Agreement, and for the doing of any act or thing which the Port Authority may be obligated or have the right to do under this Agreement or otherwise.

(b) Without limiting the generality of the foregoing, the Port Authority, by its officers, employees, agents, representatives, and contractors, and by the employees, agents, representatives and contractors of any furnisher of utilities and other services, shall have the right, for its own benefit, for the benefit of the Lessee, or for the benefit of others than the Lessee at the Airport, to maintain existing and future utility, systems or portions thereof on the premises, including therein without limitation thereto, systems for the supply of heat, water, gas, fuel, electricity, and for the furnishing of fire-alarm, fire-protection, sprinkler, sewerage, drainage, telegraph and telephone service, including all lines, pipes, mains, wires, conduits and equipment connected with or appurtenant to such systems, and to enter upon the premises at all reasonable

times to make such repairs, replacements or alterations as may, in the opinion of the Port Authority, be deemed necessary or advisable and, from time to time, to construct or install over, in or under the premises new systems or parts thereof, including lines, pipes, mains, wires, conduits and equipment, and to use the premises for access to other parts of the Airport otherwise not conveniently accessible, provided, however, that in the exercise of such rights of access, repair, alteration or new construction the Port Authority shall not unreasonably interfere with the use and occupancy of the premises by the Lessee.

(c) In the event that any property of the Lessee shall obstruct the access of the Port Authority, its employees, agents or contractors to any of the existing or future utility, mechanical, electrical or other systems and thus shall interfere with the inspection, maintenance or repair of any such system, the Lessee shall move such property, as directed by the Port Authority, in order that access may be had to the system or part thereof for its inspection, maintenance or repair, and, if the Lessee shall fail to so remove such property after direction from the Port Authority to do so, the Port Authority may move it and the Lessee hereby agrees to pay the cost of such moving upon demand.

(d) Nothing in this Section shall or shall be construed to impose upon the Port Authority any obligations so to construct or maintain or to make repairs, replacements, alterations or additions, or shall create any liability for any failure so to do. With respect to the premises, the Lessee is and shall be in exclusive control and possession thereof and the Port Authority shall not in any event be liable for any injury or damage to any property or to any person happening on or about said premises nor for any injury or damage to said premises nor to any property of the Lessee or for any other person located therein or thereon.

(e) At any time and from time to time during ordinary business hours within the six (6) months next preceding the expiration of the letting, the Port Authority, for and by its agents and employees, whether or not accompanied by prospective lessees, occupiers or users of the premises, shall have the right to enter thereon for the purpose of exhibiting and viewing all parts of the same, and during such six month period the Port Authority may place and maintain on the premises the usual "To Let" signs, which signs the Lessee shall permit to remain without molestation.

(f) If, during the last month of the letting, the Lessee shall have removed all or substantially all of its property from the premises, the Port Authority may immediately enter and alter, renovate and redecorate the premises.

(g) No abatement of rental shall be claimed by or allowed to the Lessee by reason of the exercise of any or all of the foregoing rights by the Port Authority or others.

Section 20. Condemnation

(a) Definitions.

The following terms, when used in this Section 20, shall, unless the context shall require otherwise, have the respective meanings given below:

"Date of Taking" shall mean the date on which title to all or any portion of the Premises, as the case may be, has vested in any lawful power or authority pursuant to a Taking.

"Material Part" with reference to the Premises or with reference to the Public Landing Area shall mean such portion of the Premises or the Public Landing Area as when so taken would leave the remaining a balance of the Premises, due either to the area so taken or the location of the part so taken in relation to the part not so taken, that would not under economic conditions and after performance by the Lessee of all covenants, agreements, terms and provisions contained herein or required by law to be observed or performed by the Lessee, permit the restoration of the Premises so as to enable the Lessee to operate, maintain and develop the Premises in accordance with Sections 3 and 6 of this Agreement and to continue to carry on its normal operations at the Airport without using such part taken.

"Taking" shall mean the acquisition of a real property interest, through condemnation or the exercise of the power of eminent domain, by any body having a superior power of eminent domain.

(b) Permanent Taking of All of a Portion of the Premises and the Public Landing Area.

(1) If a Taking is permanent and covers the entire Premises, then this Agreement shall, as of the Date of Taking, cease and determine in the same manner and with the same effect as if such date were the original date of expiration hereof.

(2) If a Taking is permanent but covers less than all of the Premises, this Agreement and the term hereof shall continue as to the portion of the Premises not so taken, and the letting as to the part of the Premises so taken shall, as of the Date of Taking, cease and determine in the same manner and with the same effect as if the term of the letting had on that date expired, and the rentals shall be abated as provided in Section 4 hereof.

(3) If a Taking is permanent and covers a Material Part of the Premises or of the Public Landing Area, then the Lessee and the Port Authority shall each have an option exercisable by notice given within ten (10) days after the Date of Taking to terminate the letting hereunder with respect to the Premises not taken, as of the Date of Taking, and such termination shall be effective as if the Date of Taking were the original date of expiration hereof. If the Port Authority exercises this option, it shall purchase from the Lessee the Lessee's leasehold interest (excluding any personal property whatsoever) in the Premises not taken for a consideration equal to the unamortized capital investment (as defined below), if any, of the Lessee in the Premises not taken. If the letting of the entire Premises is not terminated, the rentals shall be abated in accordance with Section 4 hereof after the date of surrender of possession of the portion of the Premises taken.

(4) If a Taking is permanent but covers less than the entire Premises and the letting of the portion of the Premises not taken is not terminated pursuant to paragraph (b) (3) of this Section, the Lessee shall proceed diligently to restore the remaining part of the Premises not so taken so that the Premises shall be a complete, operable, self-contained architectural unit in

good condition and repair and the proceeds of that portion of any award paid in trust to the Port Authority pursuant to Section 23.3 of the Basic Lease attributable to the improvements on the Premises not so taken shall be made available by the Port Authority to be used by the Lessee for that purpose. The Port Authority shall retain any excess of such award over the costs of the restoration.

(5) If a Taking (x) covers all or "substantially all of a Municipal Air Terminal", as defined in the Basic Lease, and (y) the Basic Lease (with respect to the Airport) and this Agreement are consequently terminated, then the Port Authority shall pay to the Lessee its unamortized capital investment, if any, in the Premises, *provided, however,* that the Port Authority's foregoing payment obligation to the Lessee shall be limited to a proportionate share (as determined by the Port Authority in its sole discretion following consultation with all of the Port Authority's tenants at the Airport) of the condemnation proceeds available to be paid to the Lessee and the Port Authority's other tenants at the Airport, and *provided, further,* that such available condemnation proceeds shall be limited to the amount of the condemnation proceeds received from the City remaining after the Port Authority has been compensated for (p) the value of its leasehold interest in the Airport or (q) the sum of the unamortized portion of the Port Authority's investment in improvements at the Airport and any remaining deferred charges for equipment acquired by the Port Authority for use at or in connection with its operation of the Airport, whichever of (p) or (q) is greater (such greater amount, the "Port Authority Share"). In making the determination of "proportionate share" provided in the first proviso of the preceding sentence, the Port Authority shall in no event be liable, in any respect, to the Lessee or any other party by reason of such determination or the resulting distribution of proceeds, and the Lessee shall, prior to the receipt of any such distribution, execute and deliver to the Port Authority such form of waiver, release and indemnification as the Port Authority may request. The Lessee understands and accepts that after payment of the Port Authority Share, there may be insufficient condemnation proceeds (or none at all) remaining to pay all or any portion of the Lessee's unamortized capital investment.

(c) Temporary Taking of All of Any Part of the Premises or the Public Landing Area.

(1) If the temporary use of the whole or any part of the Premises shall be taken for any public or quasi-public purpose by any lawful power or authority pursuant to a Taking or by agreement between the Port Authority and such lawful power or authority, (w) the Lessee shall give prompt notice thereof to the Port Authority, (x) the Term shall not be reduced or affected in any way and (y) the Lessee shall continue to pay in full all rentals payable by the Lessee hereunder without reduction or abatement except as set forth in paragraph (c) (2) below.

(2) If a temporary Taking covers all or a Material Part of the Premises or the Public Landing Area, then the Lessee and the Port Authority shall each have an option, exercisable by notice given within ten (10) days after the Date of Taking, to suspend the term of the letting of such Premises as are not so taken during the period of the Taking, and, in that event, the rentals for such portion of the Premises not so taken shall abate for the period of the suspension in accordance with Section 4C hereof. If the Port Authority exercises this option, it shall purchase from the Lessee the Lessee's leasehold interest (excluding any personal property whatsoever) in the Premises not taken for the period of suspension for a consideration equal to

the unamortized capital investment, if any, of the Lessee in such Premises which is to be amortized over the period of the suspension.

(d) Lessee's cooperation.

The Lessee shall execute any and all documents that may be reasonably required in order to facilitate collection by the appropriate party of awards or payments covered by this Section.

(e) Condemnation claims by the Lessee.

To the extent a condemnation claim by the Lessee shall not diminish any claim, award, compensation or damages of or to the City or of or to the Port Authority on account of any condemnation and such condemnation claim is permitted by Section 23 of the Basic Lease, the Lessee may file a claim in a condemnation proceeding.

Section 21. Assignment, Transfer, Mortgage and Subletting

a. Definitions:

"Affiliate" shall mean any Person (hereinafter defined) which, directly or indirectly controls, or is controlled by or is under common control with any other Person. Affiliate shall also mean any individual who is a member of the immediate family (whether by birth or marriage) of a Person who is an individual, which includes for purposes of this definition a spouse, a brother or a sister of the whole or half blood of such Person, the spouse of any such brother or sister, a lineal descendant or ancestor (including an individual related by or through legal adoption) of such Person or any of the foregoing or a trust for the benefit of such Person or any of the foregoing.

"Assignment" shall mean any sale, conveyance, Transfer, Pledge, exchange, assignment or other disposition, or any Mortgage, of all or any portion of the Lessee's interest in this Agreement or the leasehold estate created hereby, whether by operation of law or otherwise.

"Consent Fee" shall be the applicable fee then in effect and payable by the Lessee during the period in which a Consent to any Assignment, Transfer, Sublease or Mortgage agreement executed by and between the Port Authority and the Lessee is in effect.

"Control" shall be deemed to exist where any Person, has possession of the power, directly or indirectly, to cause the direction of management and policies of a corporation, partnership, trust or other business entity, whether through voting securities, by contract, by common directors, officers or trustees or otherwise, provided, however, that notwithstanding the foregoing, "Control" shall be deemed to exist where any Person has ownership of fifty percent (50%) or more of all of the voting stock of a corporation or more than fifty percent (50%) of all of the legal or equitable interests in any other business entity.

"**Mortgage**" shall mean any mortgage or deed of trust, a deed to secure debt or other security instrument by which a Lessee's leasehold estate created hereunder is mortgaged,

conveyed, assigned or otherwise transferred to secure a debt or other obligation, and all extensions, modifications and amendments thereto.

"Pledge" shall have the meaning provided in Section 21A hereof.

"Premises" shall have the meaning provided in Section 1 hereof.

"Prohibited Party" shall mean any Person, or any Person that is controlled by a Person, or any Person who is an Affiliate of, or holds five percent (5%) or more of the equity interest in, a Person:

(1) that has been or is currently under indictment for or convicted of a crime in any jurisdiction, or the subject of a criminal investigation by any federal, state or local prosecuting or investigative agency and/or a civil anti-trust investigation by any federal, state or local prosecuting or investigative agency;

(2) that has had a development agreement with the Port Authority terminated for willful default or breach, has had a contract terminated by a governmental agency in the States of New York or New Jersey for willful default or breach or has had a contract terminated for any cause relating to an indictment or conviction of such Person or its principals;

(3) that is in material default beyond any applicable grace period, under any agreement with the Port Authority or has been, within the preceding five (5) years, in material default, beyond any applicable grace period, under any agreement with the Port Authority;

(4) that has been suspended, debarred, found not responsible or otherwise disqualified from entering into any contract with any governmental agency or been denied a government contract for failure to meet standards related to integrity;

(5) that has had any sanction imposed as a result of a judicial or administrative proceeding related to fraud, extortion, bribery, bid rigging, embezzlements, misrepresentation or anti-trust regardless of the dollar amount of the sanctions or the date of their imposition;

(6) that is organized in or controlled from a country which is subject to any of the following (i) the Trading with the Enemy Act of 1917, 50 U.S.C.App. Section 1 et seq., as amended; and (ii) the International Emergency Economic Powers Act of 1976, 50 U.S.C . Section 1701 et seq., as amended; and (iii) the Anti-Terrorism and Arms Export Amendments Act of 1989, codified at Section 6(j) of the Export Administration Act of 1979, 50 U.S.C. App. Sec. 2405, as amended;

(7) that engages in any dealings or transactions or is blocked or subject to blocking pursuant to Executive Order 13224 of September 23, 2001 Blocking Property and Prohibiting Transactions With Persons Who Commit,

Threaten to Commit, or Support Terrorism (66 Fed. Reg. 49079 (2001)) (the "**Executive Order**"), or is otherwise associated with any such Person in any manner violative of the Executive Order or any State or City of New York or the State of New Jersey statutes, codes, regulations, orders or other governmental action relating to activities referenced in this clause (7);

(8) that is on the list of Specially Designated Nationals and Blocked Persons or subject to the limitations or prohibitions under any other U.S. Department of Treasury's Office of Foreign Assets Control regulation or executive order ("**OFAC**") and/or with whom the Landlord is restricted from doing business with under OFAC or under any statute, executive order or other governmental action of any State, or City of New York or the State of New Jersey statutes, codes, regulations, orders or other governmental action relating to activities referenced in this clause (8);

(9) that has (w) filed a petition under any insolvency statute, (x) made a general assignment for the benefit of its creditors, (y) commenced a proceeding for the appointment of a receiver, trustee, liquidator or conservator of itself or of the whole or any substantial part of its property or shall otherwise be dissolved or liquidated, or (z) filed a petition seeking reorganization or liquidation or similar relief under any applicable law or statute, or has been subject to any of the foregoing in the preceding five (5) years;

(10) that is involved or has been involved in a material litigation or similar proceeding adverse to the Port Authority or any subsidiary thereof;

(11) issued or covered by the Port Authority or any other regulatory authority, whose involvement or presence in the Project or the Premises, in the Port Authority's sole discretion, could create a potential security threat, and/or is repugnant to the public policy of the United States or other governmental authorities, or who may be involved in a public controversy (it being understood that if any Person's involvement in the Project and/or the Premises is subject to the express approval of a federal or state governmental actor, and all such approvals are granted, then such Person shall be deemed excluded from this clause (11));

(12) whose involvement or presence in the Project or the Premises would create any conflict of interest as defined under the Public Officers Law of the State of New York between any Commissioner of the Port Authority and itself or its chief executive officer, chief operating officer, chief financial officer, president, chairman of the board, other similar senior executive, or any Person or entity which controls, is controlled by, or is under common control with it;

(13) that shall not be subject or submit itself to the jurisdiction of the courts of the State of New York in any actions relating to the Project and/or this Agreement.

"Project" shall mean the building and all other improvements to be located on the Premises, including the planning, design and construction work described in Section 6 hereof.

"Sublease" shall mean any sublease (including a sub-sublease or any further level of subletting) and any occupancy, license, franchise or concession agreement applicable to the Premises or any portion thereof.

"Subtenant" shall mean any subtenant (including a sub-subtenant or any further level of subtenant), operator, licensee, franchisee, concessionaire or other occupant, pursuant to a Sublease.

"Transfer" shall mean the transfer, sale, assignment, pledge, hypothecation or other disposition of any interest in the Lessee or in any direct or indirect constituent entity of the Lessee, where such disposition (whether by itself or cumulatively with other transactions) directly or indirectly produces any change in the direct or indirect Control of the Lessee, and shall include but not be limited to (1) the sale, assignment, redemption or transfer of outstanding stock of or membership interest in, respectively, any corporation or any limited liability company that is the Lessee or that is the general partner of any partnership that is the Lessee, (2) the issuance of additional stock or membership interest in, respectively, any corporation or limited liability company that is the Lessee or that is the general partner of any partnership that is the Lesseee, and (3) the sale, assignment, redemption or transfer of any general or limited partner's interest in, or the admission of a new partner to, a partnership that is the Lesseee or that is a general or limited partner of any partnership that is the Lessee. Without limitation as to the generality of the foregoing, any transfer of more than fifty percent (50%) of the legal or beneficial interests in the Lessee shall be deemed to constitute a "change in Control of the Lessee". Notwithstanding the foregoing, "Transfer" shall specifically include the offering of interests in the Lessee, or in any party that directly or indirectly Controls the Lessee, by way of a public offering on any national securities exchange.

b. Consent Required.

(i) Except as otherwise expressly provided in this Agreement, no Assignment, Transfer, Sublease or Mortgage may be made without the prior written consent in each instance of the Port Authority, in its sole discretion, and any Assignment, Transfer, Sublease or Mortgage made without such consent shall constitute a material default under this Agreement, giving rise to a right of termination by the Port Authority under the Section hereof entitled "Termination".

(ii) The Port Authority reserves the right, in connection with and as a condition to its granting of consent to an Assignment, Transfer, Sublease or Mortgage, to require the payment to the Port Authority of a fee (a "Consent Fee"). Notwithstanding the foregoing, no Consent Fee shall be payable in connection with any Assignment consented to by the Port Authority as of the Commencement Date.

c. <u>Submission of Documents and Information</u>

Whenever the Lessee desires to effect an Assignment, Transfer or a Sublease, the Lessee shall, and as a condition to the effectiveness thereof, prior to the effective date of such

proposed transaction, notify the Port Authority of such proposed transaction and submit to the Port Authority the following documents (which may be unexecuted but shall be in substantially final form) and information:

(1) In the case of an Assignment, (x) a copy of the proposed instrument(s) of assignment, containing, inter alia, the name, address and telephone number of the proposed assignee, (y) a copy of an agreement executed by the Port Authority, the Lessee and the proposed assignee in the form attached hereto as Exhibit Y and (z) an affidavit of the assignee or an authorized officer or general partner thereof, setting forth the following:

(a) In the case of a partnership, the names and addresses of all general partners and of all other partners having a five percent (5%) or greater ownership interest in the assignee,

(b) In the case of a corporation, the names and addresses of all directors and officers and of all Persons having a five percent (5%) or greater ownership interest in the assignee, and

(c) In the case of a limited liability company or other entity, the names and addresses of all managers or other Persons charged with the direction or management of its affairs and of all Persons having a five percent (5%) or greater ownership interest in the assignee;

(2) In the case of a Transfer, (x) a copy of the proposed instrument(s) effecting the Transfer, containing, inter alia, the name, address and telephone number of the proposed Transferee, and (y) an affidavit of an authorized officer or general partner of the Lessee, setting forth the same information as is required with respect to assignees in subparagraph (1)(z) above;

(3) In the case of a Sublease, (x) a copy of the proposed Sublease, containing, inter alia, the name, address and telephone number of the proposed Sublessee, (y) a copy of an agreement executed by the Port Authority, the Lessee and the proposed Sublessee in the form attached hereto as Exhibit X and (z) an affidavit of an authorized officer or general partner of the Lessee or such proposed Sublessee, setting forth the same information as is required with respect to assignees in subparagraph (1) (z) (a-c) above; and

(4) In all such cases, such other documents and information as the Port Authority may request to permit the evaluation of such Assignment, Transfer or Sublease.

d. <u>Conditions to Effectiveness of Transactions</u>

Notwithstanding any other provision of this Agreement, and notwithstanding that the consent of the Port Authority may have been given, in no event shall the Lessee enter into an Assignment, Transfer of Sublease, and any such purported assignment, Transfer of Sublease shall be void and of no effect, if:

(1) on the proposed effective date of such Assignment, Transfer, Sublease or Mortgage (x) there exists an Event of Default by the Assignor, transferor or sublessor, as the case may be, that remains uncured, (y) this Agreement shall not then be in full force and effect or (z)

there is then in effect any notice of termination to the Assignor, transferor, or sublessor pursuant to the Section of this Agreement entitled "Termination", or

(2) the proposed Assignment, Transfer, Sublease or Mortgage is to any Person that is a Prohibited Party,

(3) the proposed Assignment, Transfer, Sublease or Mortgage would entail a violation of the Port Authority Code of Ethics or the relevant conflict of interest rules.

e. **No Waiver**

1. Violations. The Port Authority may collect all rentals and fees due hereunder from any assignee or Subtenant or other party claiming a right under this Agreement or letting or occupying the Premises pursuant to an Assignment, Transfer or Sublease entered into in violation of the foregoing Sections and the Port Authority shall apply the net amount collected to the rentals and fees herein reserved; but no such collection shall be deemed a waiver by the Port Authority of the prohibitions contained in the foregoing Sections or an acceptance by the Port Authority of any such assignee, Subtenant, claimant or occupant as Lessee, nor a release of the Lessee by the Port Authority from the further performance by the Lessee of the covenants contained herein.

2. Consents. Any consent granted by the Port Authority to any Assignment, Transfer, Mortgage or Sublease pursuant to the Provisions hereof shall not be construed or deemed to release, relieve or discharge any succeeding proposed Assignment, Transfer, Mortgage or Sublease from the requirement of having the prior written consent of the Port Authority.

f. **Certain Sublease Requirements**

1. *Lessee's Name.* The Lessee shall enter into all Subleases in its own name.

2. *Term.* The Lessee shall not enter into any Sublease for a term (including renewal options) that expires later than the day preceding Expiration Date.

3. Required Provisions. Every Sublease entered into by the Lessee shall provide as follows:

(a) It is subordinate and subject to this Agreement.

(b) Except for security deposits and any other amounts deposited with the Lessee or with any Recognized Mortgagee in connection with the payment of insurance premiums, real property taxes and assessments and other similar charges or expenses, the Subtenant shall not pay rent or other sums payable under the Sublease to the Lessee for more than one (1) month in advance.

(c) In the event the Port Authority has not entered into a nondisturbance agreement with the Subtenant pursuant to the provisions of this Section then at the option of the Port Authority, on the termination of this Agreement pursuant to the Section of this Agreement entitled "Termination" the Subtenant shall attorn to, or shall enter into a direct lease on the terms identical to

its Sublease with, the Port Authority for the balance of the unexpired term of the Sublease.

(d) With respect to any Sublease providing for the payment of percentage rent by the Subtenant to the Lessee, the Subtenant shall maintain full and accurate books of account and records of the Subtenant's business operation or enterprise, which books and records shall be so kept and maintained for at least five (5) years after the end of each lease year.

4. *Subtenant Obligations.* The Lessee shall use its best efforts to cause all Subtenants to comply with their obligations under their Subleases. A violation or breach of any of the terms, provisions or conditions of this Agreement that results from, or is caused by, an act or omission by a Subtenant shall not relieve the Lessee of the Lessee's obligations to cure such violation or breach.

5. *Collection of Sub-rent by the Port Authority.* After an Event of Default relating to the Lessee's monetary obligations hereunder, the Port Authority may, subject to the rights of any Recognized Lender, collect rent and all other sums due under any Subleases and apply the net amount collected to the Rental Payable by the Lessee hereunder. No such collection shall be, or shall be deemed to be, a waiver of any agreement, term, covenant or condition of this Agreement or the recognition by the Port Authority of any Subtenant as a direct tenant of the Port Authority or a release of the Lessee from performance of its obligations under this Agreement.

6. *Sublease Assignment.*

(a) As additional security for the full performance of all of the Lessee's obligations hereunder, the Lessee hereby assigns, transfers and sets over unto the Port Authority, subject to any assignment of Subleases and/or rents to a Recognized Mortgagee made in connection with its Mortgage, all of the Lessee's right, title and interest in and to all Subleases, and hereby confers upon the Port Authority, its agents and representatives , a right of entry in, and sufficient possession of, the Premises to permit and ensure the collection by the Port Authority of all sums payable under such Subleases, and enforcement of all other rights of the Lessee under such Subleases. The exercise of such right of entry and qualified possession by the Port Authority shall not constitute an eviction of the Lessee from the Premises or any portion thereof. If such right of entry and possession is denied to the Port Authority, its agents or representatives, the Port Authority, in the exercise of this right, may use all requisite force to gain and enjoy the Premises with neither responsibility for nor liability to the Lessee, its servants, employees, guests or invitees, or any Person whatsoever.

(b) On June 30 and December 31 of each year during the term of this Agreement, commencing with the year in which the Subtenant first occupied any portion of the Premises, the Lessee shall deliver to the Port Authority (x) a schedule of all Subleases, giving the names of all Subtenants, a description of the space that has been sublet(or licensed, etc) expiration dates, rentals and other fees and such other information as the Port Authority may request, and (y) a copy of all Subleases, licenses and franchise and concession agreements. Upon request of the port Authority, the Lessee shall permit the Port Authority and its agents and representatives to inspect original counterparts of all Subleases.

g. Lessee Representation

The Lessee represents and warrants, knowing that the Port Authority is relying on the accuracy of such representation, that the Exhibit E attached hereto and hereby made a part hereof is a true and accurate description of the Lessee's ownership structure as of the date hereof. The Lessee covenants to provide the Port Authority, within thirty (30) days' of each and every change in such ownership structure, with an updated Exhibit E reflecting such change, and the Lessee warrants that such updated Exhibit E shall be a true and accurate description of the Lessee's ownership structure as of the date the Lessee provides such updated Exhibit E to the Port Authority.

h. Violations of Consent Provision If the Lessee assigns, sells, conveys, transfers, mortgages, pledges or sublets in violation of paragraph ((b) of this Section or if the premises are occupied by anybody other than the Lessee, the Port Authority may collect rent from any assignee, sub lessee or anyone who claims a right under this Agreement or letting or who occupies the premises, and the Port Authority shall apply the net amount collected to the rental herein reserved; but no such collection shall be deemed a waiver by the Port Authority of the covenants contained in paragraph (b) of this Section nor any acceptance by the Port Authority of any such assignee, sub lessee, claimant or occupant as Lessee, nor a release of the Lessee by the Port Authority from the further performance by the Lessee of the covenants contained herein.

i. Compliance with Rights of User. The Lessee shall not use or permit any person to use the premises or any portion thereof for any purpose other than the purposes stated in Section 3 hereof.

Section 21 A. PERMITTED PLEDGE

Section 21A. 1 Definitions.

For the purposes of this Article 21A, the following terms shall have the respective meanings set forth below:

"**Construction Loan**" shall mean the loan obtained to provide financing for the construction of the Project.

"**Institutional Investor**" shall mean any of the following that is not a Prohibited Party: (i) a commercial bank, a savings and loan association, a savings bank, a trust company, a national banking association, an investment bank, a real estate investment trust, a credit union or a commercial credit corporation, whether acting for its own account or in a fiduciary capacity, including as trustee in connection with a securitization of commercial mortgage loans or as a manager of any fund; (ii) an insurance company or a pension and/or annuity company, whether acting for its own account or in a fiduciary capacity; (iii) a pension, retirement or profit sharing trust, plan or fund; (iv) a public employees' pension or retirement system; (v) a governmental agency, body or entity or (vi) any entity, all of the equity or beneficial owners of which are one

or more of the entities listed in the preceding clauses (i) through (vi); *provided, however,* that any such entity other than those described in clause (v) above must have tangible net assets in excess of One Hundred Million Dollars ($100,000,000.00) at the time it makes a Loan and at least five (5) years of experience by a principal, officer or director within the firm (whether such experience was gained at the firm or in previous positions outside the firm) with respect to financing comparable development projects at such time; *and provided, further,* that the foregoing dollar amounts shall be increased every five (5) years after the Lease Commencement Date by the percentage increase in the CPI during the preceding five (5) year period.

"Loan" shall mean the Permanent Loan, or the Construction Loan, or the Refinancing Loan, as applicable.

"Permanent Loan" shall mean the loan obtained to pay and satisfy the Construction Loan.

"Pledge" shall mean the pledge of membership interests in the Lessee or membership interests in the owner of Lessee to secure repayment of the Construction Loan, the Permanent Loan or a Refinancing Loan.

"Pledge Agreement" shall mean the security or other agreement setting forth the parties' rights and obligations with respect to the Pledge.

"Pledgee" shall mean the holder of the Pledge.

"Recognized Construction Loan Amount" shall mean an amount not in excess of eighty percent (80%) of Total Project Costs.

"Recognized Lender" shall have the meaning provided in Section 21A.3.1.

"Recognized Loan Amount" shall mean (x) in the case of the Construction Loan, the Recognized Construction Loan Amount; (y) in the case of the Permanent Loan, the Recognized Permanent Loan Amount; and (z) in the case of a Refinancing Loan, the Recognized Refinancing Loan Amount.

"Recognized Permanent Loan Amount" shall mean the amount required to pay in full the outstanding principal amount of and all interest and other amounts then due under the Construction Loan and the expenses of obtaining and closing the Permanent Loan.

"Recognized Refinancing Loan Amount" shall mean the amount required to pay in full the outstanding principal amount of and all interest and other amounts then due under the Permanent Loan or existing Refinancing Loan, as the case may be, and the expenses of obtaining and closing the new Refinancing Loan.

"Refinancing Loan" shall mean any subsequent loan obtained to refinance the Permanent Loan or to refinance any such subsequent loan.

Section 21A.2 **Pledge Authorized.**

21A.2.1 *Pledge Authorized.* Notwithstanding the provisions of Article 21 of this Agreement, if this Agreement is then in full force and effect, a Pledge may be made without the consent of the Port Authority, at any time and from time to time, provided such Pledge:

(1) secures an amount not in excess of the applicable Recognized Loan Amount,

(2) *is made to an Institutional Investor;*

(3) is not cross-defaulted or cross-collateralized with agreements covering obligations other than the Construction Loan, the Permanent Loan or a Refinancing Loan (as the case may be); and

(4) at the time such Pledge is effected, (x) no default hereunder of which the Port Authority has given notice to the Lessee shall have occurred and be continuing, (y) no Event of Default shall have occurred and be continuing hereunder, and (z) no notice of termination shall have been given pursuant to Article 22 of this Agreement and be in effect.

21A.2.2 *Recognized Loan Amounts.* In the event the Lessee obtains a Permanent Loan with respect to the Premises, the Lessee shall first apply the proceeds of the Permanent Loan to discharge in full the Construction Loan; provided, however, that in the event the Lessee, acting diligently and in good faith, is unable to obtain a Permanent Loan in an amount at least equal to the amount of the Construction Loan or in the event that the proceeds of the Permanent Loan obtained by the Lessee are made available to the Lessee in stages so that the Lessee is unable to fully discharge the Construction Loan until the Lessee has received the full proceeds of such Permanent Loan, then, in either or both of such events only, the Lessee shall have the right to obtain a Permanent Loan without paying and satisfying the Construction Loan in full; provided, however, that the aggregate amount of any and all loans at any one time outstanding shall not exceed the Recognized Permanent Loan Amount. The provisions of this subsection shall also apply in respect of a Refinancing Loan that, for either of the reasons set forth above, does not provide proceeds sufficient to discharge the then-existing loan, provided that the aggregate amount of all loans at any one time outstanding in such circumstances shall not exceed the Recognized Refinancing Loan Amount.

21A.2.3 *Assignment.* No Pledge may be assigned, except to an Institutional Investor.

Section 21A.3 **Recognized Lender.**

21A.3.1 *Notice.* If a Pledge is proposed to be made that meets the requirements of subsection 21A.2.1 above, and if the proposed Pledgee provides the Port Authority with notice of its name and address together with (x) a draft of the Pledge Agreement, provided, however, that a true and complete copy of the Pledge Agreement shall be provided to the Port Authority promptly upon execution, (y) a certification that such holder is an Institutional Investor and that the Pledge otherwise complies with the requirements of subsection 21A.2.1above and (z) an appraisal or other evidence that the amount of the loan secured by such Pledge is not in excess of the applicable Recognized Loan Amount, then and in that event, following the Port Authority's receipt of such notice, the remaining provisions of this Article 21A shall apply in respect of such Pledge and the Pledgee..

21A.3.2 *Acknowledgment.* The Port Authority shall, within twenty (20) Business Days after receipt of the notice provided in subsection 21A.3.1 above, acknowledge in writing that the proposed Pledgee described in the notice is a lender entitled to the benefits of this Article 21A (the "**Recognized Lender**"). If the Port Authority determines that the proposed Pledgee is

not entitled to such benefits, the Port Authority shall state the reasons therefor. The Port Authority's determination with respect to the proposed Pledgee under this subsection 21A.3.2 shall be based solely upon (x) whether or not the proposed Pledgee is an Institutional Investor (y) whether the Pledge otherwise complies with the requirements of subsection 21A.2.1 above and (z) whether or not the amount of the loan secured by the Pledge will exceed the applicable Recognized Loan Amount; provided, that the Lessee and/or the Pledge shall have furnished to the Port Authority such supporting information as may reasonably be required to make such determination. Notwithstanding the foregoing, the Port Authority may, in its sole discretion, determine that a proposed Pledgee that is not an Institutional Investor shall nonetheless be deemed to be a Recognized Lender, entitled to the benefits of this Article 21A.

Section 21A.4 **Consent of Recognized Lender Required.**

No cancellation, surrender or modification of this Agreement shall be effective unless consented to in writing by the Recognized Lender (such consent not to be unreasonably withheld or delayed), and no cancellation, surrender or modification of this Agreement effectuated without the prior written consent of the Recognized Lender shall be binding on the Recognized Lender.

Section 21A.5 **Default and Termination.**

21A.5.1 *Default Notices.* (a) Upon giving the Lessee any notice of (x) a default under this Agreement, or (y) a termination of the Lessee's interest in this Agreement, or (z) a matter on which the Port Authority may predicate or claim a default by the Lessee, the Port Authority shall at the same time give a copy of such notice to the Recognized Lender. No such notice by the Port Authority to the Lessee shall be deemed to have been duly given unless and until a copy thereof has been so given to the Recognized Lender at its address last provided by the Recognized Lender to the Port Authority pursuant to the provisions of this Article.

(b) From and after the date on which the Port Authority gives such notice to the Recognized Lender, the Recognized Lender shall have the same period, for remedying any default or acts or omissions which are the subject matter of such notice, or causing the same to be remedied, as is given to the Lessee after the giving of such notice to the Lessee plus, in each instance, the additional periods of time specified in subsections 21A.5.2 and 21A.5.3 hereof to remedy, commence remedying or cause to be remedied the defaults or acts or omissions which are the subject matter of such notice. The Port Authority shall accept such performance by or at the instigation of the Recognized Lender as if the same had been done by the Lessee. The Lessee shall authorize the Recognized Lender to take any such action at the Recognized Lender's option, and shall authorize entry upon the Premises by the Recognized Lender for such purpose.

21A.5.2 *Termination Notices.* (a) Anything contained in this Agreement to the contrary notwithstanding, if any default shall occur and continue for such period as entitles the Port Authority to terminate this Agreement and the letting hereunder, the Port Authority shall not have the right to effectuate such termination unless, following the expiration of the period of time given the Lessee to cure such default or the act or omission which gave rise to such default, the Port Authority shall give the Recognized Lender notice of the Port Authority's intention to so terminate (a "**Termination Notice**") at least twenty (20) Business Days in advance of the proposed effective date of such termination if such default is capable of being cured solely by the payment of money, and at least thirty (30) Business Days in advance of the proposed effective

date of such termination if such default is not capable of being cured solely by the payment of money.

(b) The provisions of Section 21A.5.3 below shall apply if, during such twenty (20) or thirty (30) Business Day period (the "**Termination Notice Period**"), the Recognized Lender:

(i) notifies the Port Authority of the Recognized Lender's desire to nullify such notice; and

(ii) pays or causes to be paid to the Port Authority all Rentals and other payments then due and in arrears as specified in the Termination Notice, as well as all Rentals and other payments which may become due from the Lessee during the Termination Notice Period and of which the Recognized Lender is given written notice by the Port Authority; and

(iii) complies or in good faith, with diligence and continuity, commences to comply with all nonmonetary requirements of this Agreement then in default and susceptible of being complied with by the Recognized Lender. If the curing of any nonmonetary default requires the Recognized Lender to obtain possession of the Premises, then the Recognized Lender shall be deemed to have commenced in good faith to comply with the obligation of the Lessee with diligence and continuity, subject to the effects of any stay that may prevent it from so doing, if it has commenced and is prosecuting with due diligence proceedings to obtain such possession, whether through foreclosure on the Pledge, an application for the appointment of a receiver or otherwise or, having obtained such possession, is then undertaking to comply with such obligation with due diligence.

21A.5.3 *Procedure on Default.* (a) If the Port Authority elects to terminate the Lessee's leasehold interest by reason of any default of the Lessee, and the Recognized Lender has proceeded in the manner provided for by subsection 21A.5.2 above, the specified date for the termination of the Lessee's leasehold interest as fixed by the Port Authority in its Termination Notice shall be extended for a period of six (6) months, provided that the Recognized Lender shall, during such six (6) month period, pay or cause to be paid the Rentals and other monetary obligations of the Lessee under this Agreement as the same become due and continue its good faith efforts to perform all of the Lessee's other obligations under this Agreement as and to the extent provided in subsection 21A.5.2 above, subject to the effects of any stay which may prevent it from doing so.

(b) If at the end of such six (6) month period the Recognized Lender is complying with subsection 21A.5.2 above, then, provided that the Recognized Lender continues so to comply, this Agreement shall not then terminate, and the time for completion by the Recognized Lender of the actions being taken by it pursuant to subsection 21A.5.2(iii) shall be extended for such additional period of time as may be required for the completion thereof with all due diligence, taking into account the effect of any stay which may prevent the Recognized Lender from proceeding with such actions. Nothing in this Article 21A, however, shall be construed to extend the term of the letting hereunder beyond the Expiration Date or to require the Recognized Lender to continue any foreclosure proceedings after completion of the cure of the

default in respect of which the Termination Notice was issued. If such default is cured and the Recognized Lender discontinues such foreclosure proceedings, this Agreement shall continue in full force and effect as if the Lessee had not defaulted under this Agreement.

Section 21A.6 **Eminent Domain.**

Unless prohibited by applicable law, the Recognized Lender shall have the right to be a party in any condemnation or eminent domain proceeding affecting the Premises and/or the Building for the purpose of protecting its interest in such proceeding.

Section 21A.7 **Casualty Loss.**

A standard mortgagee clause naming the Recognized Lender may be added to any and all casualty insurance policies required to be carried by the Lessee hereunder on condition that the insurance proceeds are to be applied in the manner specified in this Agreement, and the Pledge Agreement shall so provide; provided, however, that the Pledge Agreement may provide a manner for the disposition of such proceeds, if any, otherwise payable directly to the Lessee.

Section 21A.8 **Estoppel Certificate.**

The Port Authority shall,. at any time and from time to time hereafter, within thirty (30) Business Days after written request by the Lessee to do so, certify to the Recognized Lender or purchaser, or any other Person specified in such request, by written instrument duly executed and acknowledged by the Port Authority (such instrument, as "Estoppel Certificate"), as follows: (A) as to whether this Agreement has been supplemented or amended, and if so, the date and substance of each such supplement or amendment; (B) as to the validity, force and effect of this Agreement, as amended, in accordance with its tenor; (C) as to whether any notice has been sent, pursuant to Section 34 hereof, by reason of the occurrence of an Event or Default hereunder; (D) as to the existence of any offsets, counterclaims or defenses hereto on the part of the Lessee known to the Port Authority; (E) as to the commencement and expiration dates of the term of this Agreement; and (F) as to any other matters as may be reasonably so requested including, without limitation, the annual amounts of Basic Rental. The Port Authority shall provide Estoppel Certificates without charge not more than twice in any rolling one-year period; for each Estoppel Certificate provided by the Port Authority in excess of the foregoing frequency, the Lessee shall pay to the Port Authority a charge in the amount of One Thousand Dollars and No Cents ($1,000.00), such amount to be increased by the percentage increase in the CPI as of the fifth (5th) anniversary of the Commencement Date and each fifth anniversary thereafter.

Section 21A.9 ***Notices.***

21A.9.1 *Address.* Notices from the Port Authority to the Recognized Lender shall be mailed to the address furnished to the Port Authority pursuant to subsection 21A.3.1 above, and those from the Recognized Lender to the Port Authority shall be mailed to the address designated in or pursuant to the provisions of Section 34 hereof. In the event of any assignment of the Pledge or in the event of a change of address of the Recognized Lender or of an assignee thereof, notice of the new name and address shall be provided to the Port Authority.

21A.9.2 *Manner.* Such notices, demands and requests shall be given in the manner described in Section 34 and shall be governed by the provisions of that Article.

Section 21A.10 **Subordination.**

Notwithstanding anything contained in this Article 21A, the Pledge Agreement or otherwise, it is understood and agreed that the rights of a Pledgee, including the Recognized Lender, shall be subject and subordinate to this Agreement. The terms, covenants, conditions and provisions of this Agreement shall govern as between the Port Authority, the Lessee and the Recognized Lender, and in the event of any inconsistency between the terms, covenants, conditions and provisions of this Agreement and the terms, covenants, conditions and provisions of the Pledge Agreement, the terms, covenants, conditions, and provisions of this Agreement shall control. The Pledge Agreement shall make reference to the provisions of this Agreement and shall provide that the Pledge Agreement and the rights of the Recognized Lender thereunder are and shall be in all respects subject to all provisions of this Agreement.

Section 21A.11 **No Interest in Real Property.**

Notwithstanding anything contained in this Article 21A, the Pledge Agreement or otherwise, it is understood and agreed that no Pledge shall constitute an interest in real property.

Section 21A. 12 **Rights of Recognized Lender upon Lessee or Lessee's Owner Default under Pledge Agreement**

Notwithstanding anything contained in Section 21 hereof, the Port Authority will not withhold or condition its consent to a Transfer of any pledged membership interest in the Lessee or in the owner of the Lessee to a third party pursuant to the provisions of Recognized Lender's Pledge Agreement upon a default by the Lessee or the owner of the Lessee thereunder so long as such third party:

(a) Shall have at least five (5) years of continuous experience immediately prior to the date of Transfer in the successful design, construction, management and operation of a vehicle fuel station and in the development , management and operation of a modern dining facility, car wash and repair and maintenance facility;

(b) During the aforementioned five (5) year period, can demonstrate satisfactory performance of at least one (1) project providing similar services of similar scope as the facility proposed to be operated under the Lease; and

(c) Is not a Prohibited Party; and

(d) Complies with the terms of Section 21 hereof.

Section 22. **Termination**

(a) If any one or more of the following events shall occur, that is to say:

(1) The Lessee shall become insolvent or shall take the benefit of any present or future insolvency statute, or shall make a general assignment for the benefit of creditors, or file a voluntary petition in bankruptcy or a petition or answer seeking an arrangement or its reorganization or the readjustment of its indebtedness under the federal bankruptcy laws or under any other law or statute of the United States or of any state thereof, or consent to the appointment of a receiver, trustee, or liquidator of all or substantially all of its property; or

(2) By order or decree of a court the Lessee shall be adjudged bankrupt or an order shall be made approving a petition filed by any of its creditors or, if the Lessee is a corporation, by any of the stockholders of the Lessee, seeking its reorganization or the readjustment of its indebtedness under the federal bankruptcy laws or under any law or statute of the United States or of any state thereof; or

(3) A petition under any part of the federal bankruptcy laws or an action under any present or future insolvency law or statute shall be filed against the Lessee and shall not be dismissed within thirty (30) days after the filing thereof; or

(4) The letting hereunder or the interest or estate of the Lessee under this Agreement shall be transferred to, pass to or devolve upon, by operation of law or otherwise, any other person, firm or corporation; or

(5) The Lessee, if a corporation, shall, without the prior written approval of the Port Authority, acting in a non-arbitrary or capricious manner, become a possessor or merged corporation in a merger, a constituent corporation in a consolidation, or a corporation in dissolution; or

(6) By or pursuant to, or under authority of any legislative act, resolution or rule, or any order or decree of any court or governmental board, agency or officer having jurisdiction, a receiver, trustee, or liquidator shall take possession or control of all or substantially all of the property of the Lessee, and such possession or control shall continue in effect for a period of thirty (30) days; or

(7) The Lessee shall voluntarily abandon, desert or vacate the premises or discontinue its operations at the Airport and the Lessee's failure to cure such default within thirty (30) days after the receipt of notice (except where fulfillment of its obligation requires activity over a period of time and the Lessee shall commence to diligently perform whatever may be required for fulfillment within thirty (30) days after the receipt of notice and continues such performance without interruption) or, after exhausting or abandoning any right of further appeal, the Lessee shall be prevented for a period of thirty (30) days by action of any governmental agency other than the Port Authority having any jurisdiction thereof, from conducting its operations at the Airport, regardless of the fault of the Lessee; or

(8) Any lien is filed against the premises because of any act or omission of the Lessee and shall not be discharged within thirty (30) days; or

(9) The Lessee shall fail duly and punctually to pay the rentals or to make any other payment required hereunder when due to the Port Authority; or

(10) The Lessee shall fail to keep, perform and observe each and every other promise, covenant and agreement set forth in this Agreement on its part to be kept, performed, or observed, within ten (10) days after receipt of notice of default thereunder from the Port Authority (except where fulfillment of its obligation requires activity over a period of

time, and the Lessee shall have commenced to perform whatever may be required for fulfillment within ten (10) days after receipt of notice and continues such performance without interruption except for causes beyond its control);

(11) Any type of strike or other labor activity is directed against the operations of the Lessee at the Airport resulting in picketing or boycott for a period of at least forty-eight (48) hours which, in the opinion of the Port Authority, adversely affects or is likely adversely to affect the operation of the Airport or the operations of other lessees or licensees thereat, whether or not the same is due to the fault of the Lessee, and whether caused by the employees of the Lessee or by others;

then upon the occurrence of any such event or at any time thereafter during the continuance thereof, the Port Authority may upon five (5) days' notice terminate the letting and the rights of the Lessee hereunder, such termination to be effective upon the date specified in such notice. Such right of termination and the exercise thereof shall be and operate as a conditional limitation.

(b) If any of the events enumerated in paragraph (a) of this Section shall occur prior to the letting, the Lessee shall not be entitled to enter into possession of the premises and the Port Authority upon the occurrence of any such event or at any time thereafter during the continuance thereof by twenty-four (24) hours' notice may cancel the interest of the Lessee under this Agreement, such cancellation to be effective upon the date specified in such notice.

(c) No acceptance by the Port Authority of rentals, fees, charges or other payments in whole or in part for any period or periods after a default of any of the terms, covenants and conditions hereof to be performed, kept or observed by the Lessee shall be deemed a waiver of any right on the part of the Port Authority to terminate the letting.

(d) No waiver by the Port Authority of any default on the part of the Lessee in performance of any of the terms, covenants or conditions hereof to be performed, kept or observed by the Lessee shall be or be construed to be a waiver by the Port Authority of any other or subsequent default in performance of any of the said terms, covenants and conditions.

(e) The rights of termination described above shall be in addition to any other rights of termination provided in this Agreement and in addition to any rights and remedies that the Port Authority would have at law or in equity consequent upon any breach of this Agreement by the Lessee, and the exercise by the Port Authority of any right of termination shall be without prejudice to any other such rights and remedies.

Section 23. Right of Re-entry

The Port Authority shall, as an additional remedy upon the giving of a notice of termination as provided in Section 22 hereof, have the right to re-enter the premises and every part thereof upon the effective date of termination without further notice of any kind, and may regain and resume possession either with or without the institution of summary or any other legal proceedings or otherwise. Such re-entry, or regaining or resumption of possession, however, shall not in any manner affect, alter or diminish any of the obligations of the Lessee under this Agreement, and shall in no event constitute an acceptance of surrender.

Section 24. Waiver of Redemption

The Lessee hereby waives any and all rights to recover or regain possession of the premises and all rights of redemption, granted by or under any present or future law arising in the event it is evicted or dispossessed for any cause, or in the event the Port Authority obtains possession of the premises in any lawful manner.

Section 25. Survival of the Obligations of the Lessee

(a) In the event that the letting shall have been terminated in accordance with a notice of termination as provided in Section 22 hereof, or the interest of the Lessee cancelled pursuant thereto, or in the event that the Port Authority has re-entered, regained or resumed possession of the premises in accordance with the provisions of Section 23 hereof, all the obligations of the Lessee under this Agreement shall survive such termination or cancellation, or re-entry, regaining or resumption of possession and shall remain in full force and effect for the full term of the letting under this Agreement, and the amount or amounts of damages or deficiency shall become due and payable to the Port Authority to the same extent, at the same time or times and in the same manner as if no termination, cancellation, re-entry, regaining or resumption of possession had taken place. The Port Authority may maintain separate actions each month to recover the damage or deficiency then due or at its option and at any time may sue to recover the full deficiency less the proper discount, for the entire unexpired term.

(b) The amount of damages for the period of time subsequent to termination or cancellation (or re-entry, regaining or resumption of possession) on account of the Lessee's rental obligations, shall be the sum of the following:

(1) On account of the Lessee' ground rental obligation, the amount of the total of all annual ground rentals, less the installments thereof payable prior to the effective date of termination except that the credit to be allowed for the installment payable on the first day of the month in which the termination is effective shall be prorated for the part of the month the letting remains in effect, on the basis of a 30-day month;

(2) An amount equal to the percentage stated in Section 4(A) (3) applied to the gross receipts of the Lessee, which gross receipts would have been received by the Lessee during the balance of the term if there had been no termination or cancellation (or re-entry,

regaining, or resumption or possession); and for the purpose of calculation hereunder (i) the said amount of gross receipts shall be derived by multiplying the number of days in the balance of the term originally fixed by the daily average of the Lessee's gross receipts; (ii) the daily average of the Lessee's gross receipts shall be the Lessee's total actual gross receipts during that part of the effective period of the letting (in all monthly periods falling within the effective period) during which the premises were open and in operation and in which no abatement was in effect divided by the number of days included in such part of the effective period; (iii) the said amount of *gallons of gasoline, motor oil, diesel fuel and alternative fuel shall be respectively derived by* multiplying the number of days in the balance of the term originally fixed by the respective daily averages of the Lessee's sales and deliveries of gasoline, motor oil, diesel fuel and alternative fuel; and (iv) the daily averages of the Lessee's sales and deliveries of gasoline, motor oil, diesel fuel and alternative fuel shall be the total actual amount of gasoline, motor oil, diesel fuel and alternative fuel of each type sold or delivered by the Lessee during that part of the effective period of the letting during which the premises were open and in operation and in which no abatement was in effect divided by the number of days included in such part of the effective period; and

(3) An amount equal to all expenses incurred by the Port Authority in connection with regaining possession and restoring and relating the demised premises, for legal expenses, (including but not limited to the cost to the Port Authority of in-house legal services), putting the premises in order including without limitation, cleaning, decorating and restoring (on failure of the Lessee to restore), maintenance and brokerage fees.

(4) It is understood and agreed that the statement of damages under the preceding paragraph (b) shall not affect or be construed to affect the Port Authority's right to damages in the event of termination or cancellation (or re-entry, regaining or resumption of possession) where the Lessee has not received any actual gross receipts under this Agreement.

(c) In addition to and without limiting the foregoing or any other right, claim or remedy of the Port Authority, in the event this Lease shall be terminated pursuant to Section 22 hereof and the Lessee shall not have completed the construction work or any portion thereof within the time period specified in Section 6 hereof, the Lessee shall and hereby agrees to pay to the Port Authority any and all amounts, costs or expenses, of any type whatsoever, paid or *incurred by the Port Authority by reason by reason of the failure of the Lessee so to complete the* construction work, or any portion thereof, including all interest costs, damages, losses, and penalties, and all of the same shall be deemed treated as survived damages hereunder.

(d) Notwithstanding anything to the contrary herein contained, all of the obligations of the Lessee under this Lease with respect to Environmental Damages and Environmental Requirements shall survive the expiration or termination of this Agreement.

Section 26. Reletting by the Port Authority

The Port Authority upon termination or cancellation pursuant to Section 22 hereof, or upon any re-entry, regaining or resumption of possession pursuant to Section 23 hereof, may occupy the premises or may relent the premises, and shall have the right to permit

any person, firm or corporation to enter upon the premises and use the same. Such reletting may be of part only of the premises or a part thereof together with other space, and for a period of time the same as or different from the balance of the term hereunder remaining, and on the terms and conditions the same as or different from those set forth in this Agreement. The Port Authority shall also, upon termination or cancellation pursuant to the said Section 22, or upon its re-entry, regaining or resumption of possession pursuant to the said Section 23, have the right to repair or to make structural or other changes in the premises, including changes which alter the character of the premises and the suitability thereof for the purposes of the Lessee under this Agreement, without affecting, altering or diminishing the obligations of the Lessee hereunder. In the event either of any reletting or of any actual use and occupancy by the Port Authority (the mere right of the Port Authority to use and occupy not being sufficient however) there shall be credited to the account of the Lessee against its survived obligations hereunder any net amount remaining after deducting from the amount actually received from any lessee, licensee, permittee or other occupier in connection with the use of the said premises or portion thereof during the balance of the letting as the same is originally stated in this Agreement, or from the market value of the occupancy of such portion of the premises as the Port Authority may during such period actually use and occupy, all expenses, costs and disbursements incurred or paid by the Port Authority in connection therewith. No such reletting shall be or be construed to be an acceptance of a surrender.

Section 27. Remedies to be Non-Exclusive

All remedies provided in this Agreement shall be deemed cumulative and additional and not in lieu of or exclusive of each other or of any other remedy available to the Port Authority at law or in equity, and the exercise of any remedy, or the existence herein of other remedies or indemnities shall not prevent the exercise of any other remedy.

Section 28. Surrender

The Lessee covenants and agrees to yield and deliver peaceably to the Port Authority possession of the premises on the date of cessation of the letting, whether such cessation be by termination, expiration or otherwise, promptly and in good condition, except for reasonable wear and tear which does not cause or tend to cause deterioration of the premises or adversely affect the efficient or proper utilization thereof, and all of the premises shall be free and clear of all liens, encumbrances, and security interests of any type whatsoever.

Section 29. Acceptance of Surrender of Lease

No Agreement of surrender or to accept a surrender shall be valid unless and until the same shall have been reduced to writing and signed by the duly authorized representatives of the Port Authority and of the Lessee. Except as expressly provided in this Section, neither the doing of, nor any omission to do, any act or thing, by any of the officers, agents or employees of the Port Authority, shall be deemed an acceptance of a surrender of the letting or of this Agreement.

Section 30. Effect of Basic Lease

(a) Notwithstanding any other term, provision, covenant or condition of this Agreement, this Agreement and the letting hereunder shall, in any event, terminate with the termination or expiration of the Basic Lease with the City of New York which covers the premises, such termination to be effective on such date and to have the same effect as if the term of the letting had on that date expired. The rights of the Port Authority in the premises are those granted to it by the Basic Lease, and no greater rights are granted or intended to be granted to the Lessee than the Port Authority has power thereunder to grant.

(b) The Port Authority covenants that, during the term of this Agreement, the Port Authority will not take any action which would amount to or have the effect of canceling, surrendering or terminating the Basic Lease prior to the date specified in the Basic Lease for its expiration insofar as such surrender, cancellation or termination would in any manner deprive the Lessee of any of its rights, licenses or privileges under this Agreement.

(c) Nothing herein contained shall prevent the Port Authority from entering into an agreement with the City of New York pursuant to which the Basic Lease is surrendered, cancelled or terminated *provided* that the City of New York, at the time of such agreement, assumes the obligations of the Port Authority under this Agreement.

(d) Nothing contained in this Agreement shall be deemed a waiver by the Lessee of any of its rights, licenses or privileges under this Agreement in the event that the Basic Lease should be surrendered, cancelled or terminated prior to the date specified in the Basic Lease for its expiration.

Section 31. Removal of Property

The Lessee shall have the right at any time during the letting to remove its equipment, inventories, removable fixtures and other personal property from the premises. If the Lessee shall fail to remove its property on or before the termination or expiration of the letting, the Port Authority may remove such property to a public warehouse for deposit or retain the same in its own possession, and sell the same at public auction, the proceeds of which shall be applied first to the expenses of removal, storage and sale; second to any sums owed by the Lessee to the Port Authority, with any balance remaining to be paid to the Lessee; if the expenses of such removal, storage and sale shall exceed the proceeds of sale, the Lessee shall pay such excess to the Port Authority upon demand.

Section 32. Brokerage

The Lessee represents and warrants that no broker has been concerned on its behalf in the negotiation of this Agreement and that there is no broker who is or may be entitled to be paid a commission in connection therewith. The Lessee shall indemnify and save harmless the Port Authority of and from any claim for commission or brokerage made by any and all

persons, firms or corporations whatsoever for services rendered to the Lessee in connection with the negotiation and execution of this Agreement.

Section 33. Limitation of Rights and Privileges Granted

(a) No greater rights or privileges with respect to the use of the premises or any part thereof are granted or intended to be granted to the Lessee by this Agreement, or by any provision thereof, than the rights and privileges expressly and specifically granted hereby.

(b) The premises are let to the Lessee and the Lessee takes the same subject to all the following: (i) easements, restrictions, reservations, covenants and agreements, if any, to which the premises may be subject, rights of the public in and to any public street, (ii) rights, if any, of any enterprise, public or private which is engaged in furnishing heating, lighting, power, telegraph, telephone, steam, or transportation services and of the City of New York and State of New York; (iii) permits, licenses, regulations and restrictions, if any, of the United States, the City of New York or State of New York or other governmental authority.

Section 34. Notices

Except where expressly required or permitted herein to be oral, all notices, directions, requests, consents and approvals required to be given to or by either party shall be in writing, and all such notices and requests shall be personally delivered to the duly designated officer or representative of such party or delivered to the office of such officer or representative during regular business hours, or forwarded to him or to the party at such address by registered or certified mail. The Lessee shall designate an office within the Port of New York District and an officer or representative whose regular place of business is at such office. Until further notice, the Port Authority hereby designates its Executive Director, and the Lessee designates the person named on the first page hereof as their officers or representatives upon whom notices and requests may be served, and the Port Authority designates its office at 225 Park Avenue South, New York, New York 10003, and the Lessee designates its office at 366 North Broadway, Suite 206 Jericho, New York 11753 as their respective offices where notices and requests may be served. If mailed, the notices herein required to be served shall be deemed effective and served as of the date of the registered or certified mailing thereof.

Section 35. Waiver of Right to Trial by Jury

The Lessee waives its right to trial by jury in any summary proceeding or action that may hereafter be instituted by the Port Authority against the Lessee in respect of the premises and/or in any action that may be brought by the Port Authority to recover fees, damages, or other sums due and owing under this Agreement. The Lessee specifically agrees that it shall not interpose any claims as counterclaims in any summary proceeding or action for non-payment of rents, fees or other amounts which may be brought by the Port Authority unless such claims would be deemed waived if not so interposed.

Section 36. Place of Payments

All payments required of the Lessee by this Agreement shall be made by mail to The Port Authority of New York and New Jersey, P.O. Box 95000-1517, Philadelphia, Pennsylvania 19195-1517, or to such other office or address as may be substituted therefor.

Section 37. Construction by the Lessee

The Lessee shall not erect any structures, make any improvements or do any other construction work on the premises or alter, modify or make additions, improvements or repairs to or replacements of, any structure now existing or built at any time during the letting, or install any fixtures without the prior consent of the Port Authority. In the event any construction, improvement, alteration, modification, addition, repair or replacement is made, with or without the Port Authority's consent, and unless the consent of the Port Authority shall expressly provide otherwise, the same shall immediately become the property of the Port Authority, and the Lessee shall have no right to remove the same either during the letting or at the expiration thereof unless the Port Authority, at any time prior to the expiration of the term of the letting, or any extension or renewal thereof, shall give notice to the Lessee to remove the same, or to cause the same to be changed to the satisfaction of the Port Authority, in which case the Lessee agrees to remove the same, or change it in compliance with such notice. In case of any failure on the part of the Lessee to comply with such notice, the Port Authority may effect the removal or change, and the Lessee hereby agrees to pay the cost thereof to the Port Authority upon demand. The Lessee shall have no obligations to change, restore or remove any part or aspect of the premises (hereinafter called the "Restoration Obligations") to the condition the same was in before the completion of any specific work item, unless at the time of approval of the Tenant Alteration Application and plans submitted by the Lessee, the Port Authority has specifically required such Restoration Obligations.

Section 38. Construction and Application of Terms

(a) The Section and paragraph headings, if any in this Agreement, are inserted only as a matter of convenience and for reference and in no way define, limit or describe the scope or intent of any provision hereof.

(b) Unless otherwise expressly specified, the terms, provisions and obligations contained in the Exhibit(s) attached hereto, whether there set out in full or as amendments of, or supplements to provisions elsewhere in the Agreement stated, shall have the same force and effect as if herein set forth in full.

(c) If any clause, provision or section of this Agreement shall be ruled invalid by any court of competent jurisdiction, the invalidity of such clause, provision or section or sections shall not affect any of the remaining clauses, provisions or sections hereof.

Section 39. Non-liability of Individuals

Neither the Commissioners of the Port Authority nor any of them, nor any officer, agent or employee thereof, shall be charged personally by the Lessee with any liability or held liable to it under any term or provision of this Agreement or of any supplement, modification or amendment to this Agreement or because of its execution or attempted execution, or because of any breach or alleged breach thereof.

Section 40. Non-Discrimination

(a) Without limiting the generality of any of the provisions of the Agreement, the Lessee, for itself, its successors in interest, and assigns, as a part of the consideration hereof, does hereby covenant and agree as a covenant running with the land that (1) no person on the grounds of race, creed, color, sex or national origin shall be excluded from participation in, denied the benefits of, or be otherwise subjected to discrimination in the use of the premises, (2) that in the construction of any improvements, on, over, or under the premises and the furnishing of services thereon by it, no person on the ground of race, creed, sex, color, or national origin shall be excluded from participation in, denied the benefits of, or otherwise be subjected to discrimination, (3) that the Lessee shall use the premises in compliance with all other requirements imposed by or pursuant to Title 49, Code of Federal Regulations, Department of Transportation, Subtitle A, Office of the Secretary, Part 21, Nondiscrimination in Federally-assisted programs of the Department of Transportation-Effectuation of Title VI of the Civil Rights Act of 1964, and as said Regulations may be amended, and any other present or future laws, rules, regulations, orders or directions of the United States of America with respect thereto which from time to time may be applicable to the Lessee's operations at the Airport, whether by reason of agreement between the Port Authority and the United States Government or otherwise.

(b) The Lessee shall include the provisions of paragraph (a) of this Section in every agreement or concession it may make pursuant to which any person or persons, other than the Lessee, operates any facility at the Airport providing services to the public and shall also include therein a provision granting the Port Authority a right to take such action as the United States may direct to enforce such covenant.

(c) The Lessee's non-compliance with the provisions of this Section shall constitute a material breach of this Agreement. In the event of the breach by the Lessee of any of the above non-discrimination provisions the Port Authority may take any appropriate action to enforce compliance; or in the event such non-compliance shall continue for a period of twenty (20) days after receipt of written notice from the Port Authority, the Port Authority shall have the right to terminate the Agreement and the letting hereunder with the same force and effect as a termination under the Section of this Agreement providing for termination for default by the Lessee in the performance or observance of any other term or provision of this Agreement, or may pursue such other remedies as may be provided by law; and as to any or all of the foregoing, the Port Authority may take such action as the United States may direct.

(d) The Lessee shall indemnify and hold harmless the Port Authority from any claims and demands of third persons including the United States of America resulting from the Lessee's non-compliance with any of the provisions of this Section and the Lessee shall reimburse the Port Authority for any loss or expense incurred by reason of such non-compliance.

(e) Nothing contained in this Section shall grant or shall be deemed to grant to the Lessee the right to transfer or assign this Agreement, to make any agreement or concession of the type mentioned in paragraph (b) hereof, or any right to perform any construction on the premises.

Section 41. Affirmative Action

The Lessee assures that it has and will continue to undertake an affirmative action program as required by 14 CFR Part 152, Subpart E, to insure that no person on the grounds of race, creed, color, national origin, or sex be excluded from participating in any employment activities covered in 14 CFR Part 152, Subpart E. The Lessee assures that no person shall be excluded on these grounds from participating in or receiving the services or benefits of any program or activity covered by this subpart. The Lessee assures that it will require that its covered suborganizations provide assurances to the Lessee that they similarly will undertake affirmative action programs and that they will require assurances from their suborganizations, as required by 14 CFR Part 152, Subpart E, to the same effect.

Section 42. The Lessee's Additional Ongoing Affirmative Action –Equal Opportunity Commitment

(a) In addition to and without limiting any other term or provision of this Agreement, the Lessee, in connection with its use and occupancy of the premises and any and all of its activities and operations at or affecting the premises or the Airport, shall not discriminate against employees or applicants for employment because of race, creed, color, national origin, sex, age, disability or marital status, and shall undertake or continue existing programs of affirmative action to ensure that minority group persons and women are afforded equal employment opportunity without discrimination. Such programs shall include, but not be limited to, recruitment, employment, job assignment, promotion, upgrading, demotion, transfer, layoff, termination, rates of pay or other forms of compensation, and selections for training or retraining, including apprenticeship and on-the-job training.

(b) In addition to and without limiting the foregoing, and without limiting the provisions of Sections 6 (b), 40 and 41 and Schedule E hereof, it is hereby agreed that the Lessee in connection with its continuing operation, maintenance and repair of the premises, or any portion thereof, as provided in this Agreement, and in connection with every award or agreement for concessions or consumer services at the Airport, shall throughout the term of the letting hereunder commit itself to and use good faith efforts to implement an extensive program of affirmative action, including specific affirmative action steps to be taken by the Lessee, to ensure maximum opportunities for employment and contracting by minorities and women, and by Minority Business Enterprises and Women-owned Business Enterprises. In meeting the said commitment the Lessee agrees to submit to the Port Authority for its review and approval the

Lessee's said extensive affirmative action program, including the specific affirmative action steps to be taken by the Lessee to meet its aforesaid commitment, within one hundred eighty (180) days after the execution of this Agreement. The Lessee shall incorporate in its said program such revisions and changes which the Port Authority initially or from time to time may reasonably require. The Lessee throughout the term of the letting hereunder shall document its efforts in implementing the said program, shall keep the Port Authority fully advised of the Lessee's progress in implementing the said program and shall supply to the Port Authority such information, data and documentation with respect thereto as the Port Authority may from time to time and at any time request, including but not limited to annual reports.

(c) (1) "Minority" as used herein shall have the meaning as defined in Paragraph 11(c) of Part I of Schedule E.

(2) "Minority Business Enterprise" (MBE) as used herein shall have the meaning as defined in the first paragraph of Part II of Schedule E.

(3) "Women-owned Business Enterprise" (WBE) as used herein shall have the meaning as defined in the first paragraph of Part II of Schedule E.

(4) Good faith efforts to include meaningful participation by MBEs and WBEs shall include at least the following:

(i) Dividing the work to be subcontracted into smaller portions where feasible.

(ii) Actively and affirmatively soliciting bids for subcontracts from MBEs and WBEs, including circulation of solicitations to minority and female contractor associations. The Lessee shall maintain records detailing the efforts made to provide for meaningful MBE and WBE participation as called for in paragraph (b) above, including the names and addresses of all MBEs and WBEs contacted and, if any such MBE or WBE is not selected as a joint venturer or subcontractor, the reason for such decision.

(iii) Making plans and specifications for prospective work available to MBEs and WBEs in sufficient time for review.

(iv) Utilizing the list of eligible MBEs and WBEs maintained by the Port Authority or seeking minorities and women from other sources for the purpose of soliciting bids for subcontractors.

(v) Encouraging the formation of joint ventures, partnerships or other similar arrangements among subcontractors, where appropriate, to insure that the Lessee will meet its obligations hereunder.

(vi) Insuring that provision is made to provide progress payments to MBEs and WBEs on a timely basis.

(vii) Submitting quarterly reports to the Port Authority (Office of Business and Job Opportunity) detailing its compliance with the provisions hereof.

(d) The Lessee's non-compliance with the provisions of this Section shall constitute a material breach of this Agreement. In the event of the breach by the Lessee of any of the above provisions the Port Authority may take any appropriate action to enforce compliance; or in the event such non-compliance shall continue for a period of twenty (20) days after receipt of written notice from the Port Authority, the Port Authority shall have the right to terminate this Agreement and the letting hereunder with the same force and effect as a termination under the Section of this Agreement providing for termination for default by the Lessee in the performance or observance of any other term or provision of this Agreement, or may pursue such other remedies as may be provided by law.

(e) In the implementation of this Section, the Port Authority may consider compliance by the Lessee with the provisions of any federal, state or local law concerning affirmative action-equal employment opportunity which are at least equal to the requirements of this Section, as effectuating the provisions of this Section. If the Port Authority determines that by virtue of such compliance with the provisions of any such federal, state or local law that the provisions hereof duplicate or conflict with such law the Port Authority may waive the applicability of the provisions of this Section to the extent that such duplication or conflict exists.

(f) Nothing herein provided shall be construed as a limitation upon the application of any laws which establish different standards of compliance or upon the application of requirements for the hiring of local or other area residents.

(g) Nothing in this Section shall grant or be deemed to grant to the Lessee the right to make any agreement or award for concessions or consumer services at the Airport.

Section 43. Quiet Enjoyment

The Port Authority covenants and agrees that as long as it remains the lessee of the Airport, the Lessee, upon paying all rentals hereunder and performing all the covenants, conditions and provisions of this Agreement on its part to be performed, shall and may peacefully and quietly have and enjoy the premises free of any act or acts of the Port Authority except as expressly permitted in this Agreement.

Section 44. Infringement

The Lessee represents that it is the owner of or fully authorized to use any and all services, processes, machines, articles, marks, names or slogans used by it in its operations under or in any wise connected with this Agreement. The Lessee agrees to save and hold the Port Authority, its Commissioners, officers, employees, agents and representatives free and harmless of and from any loss, liability, expense, suit or claim for damages in connection with any actual or alleged infringement of any patent, trademark or copyright, or arising from any alleged or actual unfair competition or other similar claim arising out of the operations of the Lessee under or in any wise connected with this Agreement.

Section 45. Late Charges

If the Lessee should fail to pay any amount required under this Agreement when due to the Port Authority, including without limitation any payment of basic, percentage, variable or other rental or any payment of utility, or other charges or fees or if any such amount is found to be due as the result of an audit, then, in such event, the Port Authority may impose (by statement, bill or otherwise) a late charge with respect to each such unpaid amount for each late charge period (hereinbelow described) during the entirety of which such amount remains unpaid, each such late charge not to exceed an amount equal to eight-tenths of one percent of such unpaid amount for each late charge period. There shall be twenty-four late charge periods during each calendar year; each late charge period shall be for a period of at least fifteen (15) calendar days except one late charge period each calendar year may be for a period of less than fifteen (but not less than thirteen) calendar days. Without limiting the generality of the foregoing, late charge periods in the case of amounts found to have been owing to the Port Authority as the result of Port Authority audit findings shall consist of each late charge period following the date the unpaid amount should have been paid under this Agreement. Each late charge shall be payable immediately upon demand made at any time therefor by the Port Authority. No acceptance by the Port Authority of payment of any unpaid amount or of any unpaid late charge amount shall be deemed a waiver of the right of the Port Authority to payment of any late charge or late charges payable under the provisions of this Section with respect to such unpaid amount. Each late charge shall be recoverable by the Port Authority in the same manner and with like remedies as if it were originally a part of the rental as set forth in the section of this Agreement entitled "Rental". Nothing in this Section is intended to, or shall be deemed to, affect, alter, modify or diminish in any way (i) any rights of the Port Authority under this Agreement, including without limitation the Port Authority's rights set forth in the section of this Agreement entitled "Termination" or (ii) any obligations of the Lessee under this Agreement. In the event that any late charge imposed pursuant to this Section shall exceed a legal maximum applicable to such late charge, then, in such event, each such late charge payable under this Agreement shall be payable instead at such legal maximum.

Section 46. Obligations In Connection with the Percentage/Variable Rental

The Lessee shall:

(a) Use its best efforts in every proper manner to maintain, develop and increase the business conducted by it hereunder;

(b) Not divert or cause to be diverted, any business from the Airport;

(c) Maintain in accordance with accepted accounting practice during the letting and for one (1) year thereafter and for such further period until the Lessee shall receive written permission from the Port Authority to do otherwise, records and books of account, recording all transactions at, through or in any wise connected with the automobile service station, including but not limited to records of all gasoline, diesel fuel, compressed natural gas and other fuel tank meter readings, all of which records and books of account shall be kept at all times within the Port of New York District;

(d) Permit in ordinary business hours during the letting and for one year thereafter, the examination and audit by the officers, employees, agents and representatives of the Port Authority of such records and books of account;

(e) Permit in ordinary business hours, the inspection by the officers, employees and representatives of the Port Authority of any equipment used by the Lessee, including but not limited to cash registers, tape readings and meter readings;

(f) Furnish to the Port Authority on or before the 20th day of the month following the month in which the Rental Payment Start Date occurs and on or before the twentieth (20th) day of each and every calendar month thereafter including the month following the expiration of the Lease, a statement of all gross receipts arising out of the operations of the Lessee hereunder for the preceding month and specifying and applying the percentage stated in paragraph Section 4 (A)(3)(i) and (ii) and showing furthermore the total amount of all gallons of gasoline, motor oil, diesel fuel and alternative fuel sold or delivered during the preceding month, as set forth in Section 4(A)(2)(i), (ii), and (iii) which statement shall be certified at the Lessee's expense by a certified public accountant.

(g) Install and use such cash registers, sales slips, invoicing machines or any other equipment or devices for recording orders taken or services rendered as may be appropriate to the Lessee's business and necessary or desirable to keep accurate records of gross receipts and sales and deliveries of gasoline, motor oil, diesel fuel and compressed natural gas.

(h) In the event that upon conducting an examination and audit as described in paragraph (d) of this Section the Port Authority determines that unpaid amounts are due to the Port Authority by the Lessee, the Lessee shall be obligated, and hereby agrees, to pay to the Port Authority a service charge in the amount of five percent (5%) of each amount determined by the Port Authority audit findings to be unpaid. Each such service charge shall be payable

immediately upon demand (by notice, bill or otherwise) made at any time therefor by the Port Authority. Such service charge (s) shall be exclusive of, and in addition to, any and all other moneys or amounts due to the Port Authority by the Lessee under this Lease or otherwise. No acceptance by the Port Authority of payment of any unpaid amount or of any unpaid service charge shall be deemed a waiver of the right of the Port Authority to payment of any late charge(s) or other service charge(s) payable under the provisions of this Section with respect to such unpaid amount. Each such service charge shall be and become additional rental, recoverable by the Port Authority in the same manner and with like remedies as if it were originally a part of the rental to be paid hereunder. Nothing in this Section is intended to, or shall be deemed to, affect, alter, modify or diminish in any way (i) any rights of the Port Authority under this Lease, including, without limitation, the Port Authority's rights to terminate this Lease or (ii) any obligations of the Lessee under this Lease.

Section 47. Sales and Services by the Lessee

(a) A principal purpose of the Port Authority in entering into this Agreement is to have available for passengers, travelers and other users of the Airport, all other members of the public, and persons employed at the Airport, the merchandise and/or services which the Lessee is obligated to sell and/or render hereunder, all for the better accommodation, convenience and welfare of such individuals and in fulfillment of the Port Authority's obligation to operate the Airport for the use and benefit of the public. Consistent with the provisions of Section 3 of the Lease, the Lessee shall conduct, at the premises, a first-class operation and will furnish and install all fixtures, equipment, personnel (including licensed personnel as necessary), supplies, materials, and other facilities and replacements necessary or proper therefor. The Lessee shall sell first-class items of merchandise including a full line of automotive accessory items, such as batteries and tires, including medium and economy priced lines of dependable and serviceable quality. All prices and charges shall be subject to the prior written approval of the Port Authority, and prior to the furnishing of any services or sale of any merchandise hereunder, upon the request of the Port Authority, the Lessee shall prepare and submit or cause to be prepared and submitted to the Port Authority schedules of rates and prices and any discounts therefrom for all services and merchandise, which shall not exceed reasonable prices for similar merchandise and/or services sold in the area immediately surrounding the Airport. Any changes thereafter in the schedules shall be similarly submitted to the Port Authority for its prior written approval. All such schedules shall be made available to the public, including but not limited to, prominent display at the premises at locations therein as may be designated from time to time by the Port Authority. The Lessee agrees to adhere to the rates, charges and discounts, if any, stated in the approved schedules. If the Lessee applies any rate in excess of the approved rates or extends a discount less than an approved discount, the amount by which the charge based on such actual rate or actual discount deviates from a charge based on the approved rates and/or discounts shall constitute an overcharge which will, upon demand of the Port Authority or a customer, be promptly refunded to the customer. Notwithstanding any repayment of overcharges to a customer, any such overcharge or undercharge shall constitute a breach of the Lessee's obligations hereunder and the Port Authority shall have all remedies consequent upon breach which would otherwise be available to it at law, in equity or by reason of this Lease.

(b) The Lessee shall furnish upon the request of any patron or customer, without charge, a receipt for any sale or service rendered at the premises or at the Airport.

(c) The Lessee shall not enter into any agreement or understanding, express or implied, binding or non-binding, with any other person who may furnish services at the Airport similar to those furnished hereunder which will have the effect of (1) fixing rates and charges to be paid by users of the services; (2) lessening or preventing competition between the Lessee and such other furnishers of services; or (3) tending to create a monopoly on the Airport in connection with the furnishing of such services. In order that the Port Authority may enforce the Lessee's obligations hereunder, the Lessee shall before entering into any agreement or understanding, express or implied, binding or non-binding, with any person who may furnish services at the Airport similar to those furnished hereunder, notify the Port Authority of all the details thereof, furnishing a copy of the proposed agreement if the same has been reduced to writing or a memorandum of the same, if oral, and similarly shall notify the Port Authority at the time of any change in or extension of an existing agreement. Such proposed agreements or understandings or changes or extensions of existing ones shall be subject to the approval of the Port Authority and unless approved, shall not be entered into by the Lessee.

(d) The Lessee shall be open for and conduct business at the premises seven (7) days a week, twenty-four (24) hours a day. The Port Authority's determination of proper business hours, as evidenced from time to time by notice to the Lessee, shall control.

(e) The Lessee shall make available to the public restroom facilities maintained in a manner acceptable to the Port Authority.

(f) The Lessee shall have on the premises at all times an employee able to communicate effectively in the English language so as to perform the services set forth in Sections 3 hereof.

Section 48. Postponement

[INTENTIONALLY OMITTED]

Section 49. Services

The Port Authority shall not be obligated to perform or furnish any services or utilities whatsoever in connection with this Lease or the use and occupancy of the premises hereunder nor to police the same or keep the same free from snow, ice or otherwise unobstructed and available for use by the Lessee.

Section 50. Utility Lines

The Port Authority, shall, if and to the extent required, bring appropriate roadway access stubs and service lines for the supply of cold water, electric power, telephone (limited to four telephone conduits) and sanitary and storm sewers (said service lines and sanitary and storm sewers being hereinafter collectively referred to as "utility service lines") to such locations, at the

perimeter of the site or to other locations off the site as the Port Authority shall determine. The Lessee at its sole cost and expense is hereby obligated to tie its utility lines and roadways into such locations at or near the perimeter of the site where such utility service lines and roadway access stubs will be brought by the Port Authority hereunder. The Port Authority shall have no obligation to make available any utility service lines or roadway access stubs to any location with respect to the premises prior to receiving the certificate of the Lessee and of the Lessee's architect or engineer that all of the construction work has been completed or that a portion of the construction work is properly usable, all as provided in paragraph (h) of Section 6 hereof, and that the Lessee is ready to tie its utility lines and roadways into the utility service lines and roadway access stubs to be furnished by the Port Authority to the premises.

Section 51. Relationship of the Parties

This Agreement does not constitute the Lessee, the agent or representative of the Port Authority for any purpose whatsoever. Neither a partnership nor any joint adventure is hereby created, notwithstanding the fact that all or a portion of the rental to be paid hereunder may be determined by gross receipts from the operations of the Lessee hereunder.

Section 52. Definitions

The following terms, when used in this Agreement, shall, unless the context shall require otherwise, have the respective meanings given below:

(a) "Airport" or "Facility" shall mean John F. Kennedy International Airport, consisting of certain Premises identified as "JFK International Airport" on Sheet JFK-1 of Exhibit A, and more particularly described in Exhibit B, annexed to the City Lease, and such other property as may be acquired in connection with and added to such Premises pursuant to the terms of the City Lease.

(b) "*City Lease*" shall mean the Amended and Restated Agreement of Lease of the Municipal Air Terminals between The City of New York, as Landlord, and The Port Authority of New York and New Jersey, as Tenant, dated as of November 24, 2004 and recorded in the office of the City Register of the City on December 3, 2004 under City Register File No. 2004000748687, as the same may have been or may be amended or supplemented.

(c) "Agreement" shall mean this agreement of lease.

(d) "Lease" shall mean this agreement of lease.

(e) "Letting" shall mean the letting under this Agreement for the original term stated herein, and shall include any extension thereof.

(f) "Premises shall mean and include the land, the buildings, structures and other improvements located or to be located or to be constructed therein or thereon, the equipment permanently affixed or permanently located therein, such as electrical, plumbing, sprinkler, fire protection and fire alarm, heating, steam, sewerage, drainage, refrigeration,

communications, gas and other systems, and their pipes, wires, mains, lines, tubes, conduits, equipment and fixtures and all paving, drains, culverts, ditches and catch-basins.

(g) "Manager of the Airport" or "General Manager of the Airport" shall mean the person or persons from time to time designated by the Port Authority to exercise the powers and functions vested in the General Manager by this Agreement; but until further notice from the Port Authority to the Lessee it shall mean the General Manager (or the temporary or acting General Manager) of the Airport for the time being, or his duly designated representative or representatives.

(h) "Unamortized Capital Investment" shall mean for purposes of this Lease, the amount of the Lessee's investment in the premises arising out of the performance by the Lessee of construction work, if any, after deduction therefrom of an amount equivalent to an allowance for depreciation and amortization. Such allowance will be computed on a straight-line basis over a period commencing on the Completion Date, if any, to and including the day immediately prior to expiration of the term of the letting hereunder.

The foregoing computation to be made shall not take into consideration the effect of accelerated amortization, if any, granted to or taken by the Lessee on its books or otherwise under the provisions of Section 168(a) of Title 26 USCA or similar legislation hereafter enacted.

If applicable, for purposes of this paragraph (h) the Lessee's investment in the premises shall be equal to the sum of: (1) the amounts paid by the Lessee to independent contractors for work actually performed and labor and materials actually furnished in connection with the construction of the station set forth in and pursuant to the Section of the Lease entitled "Construction by the Lessee", if any, and (2) the payments made and expenses incurred by the Lessee, in connection with such construction, for engineering, architectural, professional and consulting services and the supervision of construction, provided, however, that such payments and expenses pursuant to this item (2) shall not exceed ten percent (10%) of the amounts described in item (1); in each case, as the above-mentioned amounts, payments and expenses are evidenced, from time to time, by certificates of a responsible fiscal officer of the Lessee, sworn to before a Notary Public and delivered to the Port Authority, which certificates shall (i) set forth, in reasonable detail, the amounts paid to specified independent contractors, the payments made to other specified persons and the other expenses incurred by the Lessee, which have not previously been reported in certificates delivered to the Port Authority, (ii) have attached thereto reproduction copies or duplicate originals of the invoices of such independent contractors and other persons acknowledging the receipt by them of such amounts and payments, and (iii) certify that the amounts, payments and expenses therein set forth constitute portions of the Lessee's investment in the premises for the purposes of this Lease.

(i) "Governmental Authority", "governmental board", and "governmental agency" shall mean federal, state, municipal and other governmental authorities, boards and agencies of any state, nation or government, except that it shall not be construed to include The Port Authority of New York and New Jersey, the lessor under this lease.

(j) "Person" shall mean not only a natural person, corporation or other legal entity, but also two or more natural persons, corporations or other legal entities acting jointly as a firm, partnership, unincorporated association, consortium, joint adventurers or otherwise.

(k) "Environmental Damages" shall mean any one or more of the following: (i) the presence on, about or under the premises of any Hazardous Substance and/or (ii) the disposal, release or threatened release of any Hazardous Substance from the premises, and/or (iii) the presence of any Hazardous Substance on, about or under other property at the Airport as a result of the Lessee's use and occupancy of the premises or a migration of a Hazardous Substance from the premises, and/or (iv) any personal injury (including wrongful death) or property damage arising out of or related to any such Hazardous Substance, and/or (v) the violation of any Environmental Requirements pertaining to any such Hazardous Substance, the premises and/or the activities thereon.

(l) "Environmental Requirements" and "Environmental Requirement" shall mean all applicable present and future laws, statutes, enactments, resolutions, regulations, rules, ordinances, codes, licenses, permits, orders, approvals, plans, authorizations, concessions, franchises, requirements, best management practice plans, spill prevention control and countermeasure plans and similar items, of all governmental agencies, departments, commissions, boards, bureaus, or instrumentalities of the United States, states and political subdivisions thereof and all applicable judicial, administrative, and regulatory decrees, judgments, and orders relating to the protection of human health or the environment, and in the event that there shall be more than one compliance standard, the standard for any of the foregoing to be that which requires the lowest level of a Hazardous Substance, the foregoing to include without limitation:

(i) All requirements pertaining to reporting, licensing, permitting, investigation, and remediation of emissions, discharges, releases, or threatened releases of Hazardous Substances into the air, surface water, groundwater, or land, or relating to the manufacture, processing, distribution, use, treatment, storage, disposal, transport, or handling of Hazardous Substances; and

(ii) All requirements, pertaining to the protection of the health and safety of employees or the public.

(m) "Hazardous Substance" and "Hazardous Substances" shall mean and include without limitation any pollutant, contaminant, toxic or hazardous waste, dangerous substance, potentially dangerous substance, noxious substance, toxic substance, flammable, explosive, radioactive material, urea formaldehyde foam insulation, asbestos, polychlorinated biphenyls (PCBs), chemicals known to cause cancer or reproductive toxicity, petroleum and petroleum products and other substances which has or in the future shall be declared to be hazardous or toxic, or the removal of which has or in the future shall be required, or the manufacture, preparation, production, generation, use, maintenance, treatment, storage, transfer, handling or ownership of which has or in the future shall be restricted, prohibited, regulated or penalized by any Environmental Requirement.

Section 53. Storage Tanks

(a) All storage tanks, if any, installed in the premises as of the Commencement Date as defined in Section 2 hereof, together with all storage tanks installed in the premises during the term of the letting subsequent to the Commencement Date and its or their appurtenances, pipes, lines, fixtures and other related equipment are hereinafter collectively called the "Storage Tanks" and singularly called a "Storage Tank". The Lessee hereby agrees that title and ownership of the Storage Tanks shall be and remain in the Lessee, notwithstanding anything to the contrary in the Lease or any construction or alteration application. The Port Authority has made no representations or warranties with respect to the Storage Tanks or their location and shall assume no responsibility for the Storage Tanks. All Storage Tanks installed subsequent to said Commencement Date shall be installed pursuant to the terms and conditions of the Lease including without limitation Section 6 thereof and nothing in this Section shall or shall be deemed to be permission or authorization to install any Storage Tanks.

(b) Without limiting the generality of any of the provisions of the Lease, the Lessee agrees that it shall be solely responsible for maintaining, testing and repairing the Storage Tanks. The Lessee shall not perform any servicing, repairs or non-routine maintenance to the Storage Tanks without the prior written approval of the Port Authority.

(c) It is hereby agreed that title to and ownership of the Storage Tanks shall remain in the Lessee until the earlier to occur of (1) receipt by the Lessee of notice from the Port Authority that title to the Storage Tanks shall vest in the Port Authority or in the City of New York or (2) receipt by the Lessee of notice from the Port Authority that the Port Authority waives its right to require the Lessee to remove the Storage Tanks from the premises as set forth in paragraph (i) below. The vesting of title to the Storage Tanks in the Port Authority or in the City of New York, if at all, in accordance with the foregoing item (1) shall in no event relieve the Lessee from the obligation to remove the Storage Tanks from and restore the premises in accordance with paragraph (i) below.

(d) Without limiting the generality of any other term or provision of the Lease, the Lessee shall, at its cost and expense, comply with all Environmental Requirements pertaining to the Storage Tanks and any presence, pumping, pouring, venting, emitting, emptying, leakage, deposit, spill, discharge or other release of Hazardous Substances from the Storage Tanks or in connection with their use, operation, maintenance, testing or repair (any such presence, pumping, pouring, venting, emitting, emptying, leakage, deposit, spill, discharge or other release during the period the Lessee shall use or occupy the premises or use the Storage Tanks being hereinafter called a "Discharge") including without limitation registering and testing the Storage Tanks, submitting all required clean-up plans, bonds and other financial assurances, performing all required clean-up and remediation of a Discharge and filing all reports, making all submissions to, providing all information required by, and complying with all requirements of, all governmental authorities pursuant to the Environmental Requirements.

Nothing in the foregoing shall be construed as a submission by the Port Authority to the application to itself of the Environmental Requirements, *provided*, however, no immunity

or exemption of the Port Authority from the Environmental Requirements shall excuse the compliance therewith by the Lessee or shall be grounds for non-compliance therewith by the Lessee.

(e) Without limiting the terms and provisions of Section 15 of the Lease, the Lessee hereby assumes all risks arising out of or in connection with the Storage Tanks and all Discharges whether or not foreseen or unforeseen and shall indemnify and hold harmless the Port Authority, its Commissioners, officers, agents and employees from and against (and shall reimburse the Port Authority for their costs and expenses including without limitation penalties, fines, liabilities, settlements, damages, attorney and consultant fees, investigation and laboratory fees, clean-up and remediation costs, court costs and litigation expenses), all claims and demands, just or unjust, of third persons (such claims and demands being hereinafter in this Section referred to as "Claims" and singularly referred to as a "Claim") including but not limited to those for personal injuries (including death), property damages, or environmental impairment, arising or alleged to arise out of or in any way related to, the failure of the Lessee to comply with each and every term and provision of the Lease, or the Storage Tanks, or any Discharge, or any lawsuit brought or threatened, settlement reached or any governmental order relating to the Storage Tanks or a Discharge, or any violation or any Environmental Requirements or demands of any governmental authority based upon or in any way related to the Storage Tanks or a Discharge, and whether such arise out of the acts or omissions of the Lessee or of customers or contractors of the Lessee or of third persons or out of the acts of God or the public enemy or otherwise including claims by the City of New York against the Port Authority pursuant to the provisions of the Basic Lease (as defined in the Lease) whereby the Port Authority has agreed to indemnify the City against claims. It is understood the foregoing indemnity shall cover all claims, demands, penalties, settlements, damages, fines, costs and expenses of or imposed by any governmental Authority under the Environmental Requirements.

If so directed the Lessee shall at its expense defend any suit based upon any such Claim (even if such Claim is groundless, false or fraudulent) and in handling such it shall not without first having express advance permission from the General Counsel of the Port Authority raise any defense involving in any way the jurisdiction of the tribunal over the person of the Port Authority, the immunity of the Port Authority, its Commissioners, officers, agents or employees, the governmental nature of the Port Authority or the provisions of any statutes respecting suits against the Port Authority.

(f) The Lessee's obligations under this Section shall survive the expiration or earlier termination of the Lease.

(g) In addition to the requirements of Section 8 of the Lease and paragraph (d) hereof, the Port Authority shall have the right upon notice to the Lessee to direct the Lessee, at the Lessee's sole cost and expense, (i) to perform such reasonable testing of the Storage Tanks as the Port Authority shall direct and to perform such testing of the soil, subsoil and ground water of the premises and of such surrounding areas as the Port Authority shall direct, and (ii) to clean-up and remediate any Discharge, regardless of whether any Environmental Requirement or governmental authority shall require such testing, clean-up or remediation, which testing, clean-

up and remediation shall be performed pursuant to an alteration application prepared by the Lessee and submitted to the Port Authority for the Port Authority's approval.

(h) In the Lessee's use and operation of the Storage Tank, the Lessee shall not permit any Hazardous Substance from entering the ground including without limitation (subject to Section 6 hereof) installing appropriate spill and overfill devices and placing an impervious material, such as asphalt or concrete, over the ground area above and in the vicinity of the Storage Tanks.

(i) (1) The Lessee shall remove the Storage Tanks from the premises on or before the expiration of the Lease and dispose of the Storage Tanks off the Airport in accordance with all Environmental Requirements.

(2) Without limiting the foregoing or any other term or provision of this Agreement, any removal of the Storage Tanks shall be performed pursuant to an alteration application prepared by the Lessee and submitted to the Port Authority for the Port Authority's approval and, in connection with such removal, the Lessee shall restore the premises to the same condition existing prior to the installation of the Storage Tanks, shall perform such testing of the Storage Tanks and of the soil, sub-soil and ground water in the vicinity of the Storage Tanks as shall be required by the Port Authority and shall clean-up and remediate contamination disclosed by said testing. In the event the Lessee does not remove the Storage Tanks as required by subparagraph (1) above, the Port Authority may enter upon the premises and effect the removal and disposal of the Storage Tanks, restoration of the premises and such remediation and the Lessee hereby agrees to pay all costs and expenses of the Port Authority arising out of such removal, disposal, restoration and remediation.

Section 54. Federal Airport Aid

The Port Authority has applied for and received a grant or grants of money from the Administrator of the Federal Aviation Administration pursuant to the Airport and Airways Development Act of 1970, as the same has been amended and supplemented or superseded by similar federal legislation, and under prior federal statutes which said Act superseded and the Port Authority may in the future apply for and receive further such grants. In connection therewith, the Port Authority has undertaken and may in the future undertake certain obligations respecting its operation of the Airport and the activities of its contractors, lessees and permittees thereon. The performance by the Lessee of the covenants, promises and obligations contained in this Lease is therefore a special consideration and inducement to the making of this Agreement by the Port Authority, and the Lessee further covenants and agrees that if the Administrator of the Federal Aviation Administration or any other governmental officer or body having jurisdiction over the enforcement of the obligations of the Port Authority in connection with the Federal Airport Aid, shall make any orders, recommendations or suggestions respecting the performance by the Lessee of such covenants, promises and obligations under this Agreement, the Lessee will promptly comply therewith, at the time or times when and to the extent that the Port Authority may direct.

Section 55. Lessee's Rights Non-Exclusive

The rights and privileges granted to the Lessee are non-exclusive and neither the execution of this Lease by the Port Authority nor anything contained herein shall grant or be deemed to grant to the Lessee any exclusive rights or privileges including but not limited to the right to operate an automobile service station at the Airport.

Section 56. One Hundred Eighty Day Termination

(a) (i) Effective from and after the tenth (10th) anniversary of the Rental Payments Start Date, as defined in Section 4 hereof, and only with respect to that portion of the Premises shown in Exhibit A and identified as Parcel A, the Port Authority shall have the right to terminate this Agreement and the letting hereunder, without cause, at any time, on one hundred eighty days' prior written notice to the Lessee. In the event that this Agreement and the letting hereunder is terminated pursuant to this Section, this Agreement and the letting hereunder shall cease and expire as if the effective date of termination stated in the notice were the date originally stated herein for the expiration of this Agreement. Notwithstanding the foregoing, as to the balance of the Premises shown on Exhibit A and identified as Parcel B, effective from and after the Commencement Date, the Port Authority shall have the right to terminate this Agreement and the letting hereunder as to such portion of the premises, without cause, at any time, on one hundred eighty days' prior written notice to the Lessee.

(ii) Further, in the event the Port Authority exercises its right to revoke or terminate this Agreement for any reason other than "without cause", the Lessee shall be obligated to pay to the Port Authority an amount equal to all costs and expenses reasonably incurred by the Port Authority in connection with such termination, including without limitation any re-entry, regaining or resumption of possession, collecting all amounts due to the Port Authority, the restoration of any space which may be used and occupied under this Lease (on failure of the Lessee to have it restored), preparing such space for use by a succeeding lessee, the care and maintenance of such space during any period of non-use of the space, the foregoing to include, without limitation, personnel costs and legal expenses (including but not limited to the cost to the Port Authority of in-house legal services), repairing and altering the space and putting the space in order (such as but not limited to cleaning and decorating the same).

(b) The Lessee is obligated by this Agreement to furnish and install all fixtures and equipment and make all improvements in the premises, necessary or proper for its operations hereunder. In the event of termination by the Port Authority under this Section, the Port Authority shall pay the Lessee a *pro rata* share of the Lessee's cost in supplying and installing all such fixtures and equipment and making all such improvements excluding any replacements thereof. The cost and the *pro rata* share thereof shall be ascertained as stated in paragraph (c) hereof, provided, however, that tender of payment of said prorated cost by the Port Authority to the Lessee shall not be prerequisite to the exercise of the right of termination under this Section, but the Lessee shall be entitled to 4% interest per annum on said prorated cost for the period between the effective date of termination and the date of tender of payment (excluding any portion of the period prior to the rendering by the Lessee to the Port Authority of a statement and

other documents of cost). On the payment by the Port Authority of said prorated cost and any interest due thereon, all fixtures, equipment and improvements including replacements furnished by the Lessee in the premises and all interest of the Lessee therein which have not already become the property of the Port Authority shall be and become the property of the Port Authority and the Lessee shall execute any and all instruments necessary to transfer title to any such interest, provided, however, that the Port Authority may by notice relinquish its right to any such fixtures, equipment or improvements and the provisions of Sections 48, 6 and 28 shall apply thereto.

(c) Cost and Proration Thereof:

(i) To the extent permitted by sound accounting practice, the sum of the following items of cost incurred by the Lessee for such equipment and fixtures and the installation thereof and the making of such improvements as are necessary to initially equip and improve the premises for the Lessee's commencement of operations hereunder, all as mentioned in the Section of the Agreement entitled "One Hundred Eighty Day Termination," and to the extent that such sum does not exceed Ten Million Five Hundred Thousand Dollars and No Cents $10,500,000 shall constitute the "cost" under the said Section and under subdivisions (ii), (iii), (iv), (v), (vi), and (vii) hereof:

(aa) Direct labor and material costs;

(bb) Contract costs for purchases and installation, including, without limitation, furniture, fixtures, and equipment, but excluding those of the types mentioned in the following subdivision (cc);

(cc) Engineering, architectural, planning, designing, financing, interest, insurance, and other overhead or carrying charges which are due for a period ending not later than the date of completion of installation of any such initial equipment, fixtures or improvements for which they are incurred, and not to exceed 20% of the total of the amounts covered by subdivisions (aa) and (bb) above.

(ii) A statement of the cost detailing all the foregoing including copies of invoices and contracts and certified by a responsible officer of the Lessee shall be delivered by the Lessee to the Port Authority not later than ninety (90) days after the complete supplying and the making of all such initial improvements, and the Lessee shall permit the Port Authority, by its agents, employees and representatives, at all reasonable times prior to a final settlement or determination of cost, to examine an audit the records and books of account within the Port of New York District during such time.

(iii) If the Lessee includes in cost any items as having been incurred but which, in the opinion of the Port Authority, if so incurred is not an item properly chargeable to cost under sound accounting practice, then the Port Authority shall give written notice to the Lessee stating its objection to any such item and the grounds therefor. Determinations of the Port Authority hereunder shall be final.

(iv) The proration of cost as referred to in the Section of the Agreement entitled "One Hundred Eighty Day Termination" shall be ascertained by multiplying the cost by a fraction, the numerator of which shall be the number of whole calendar months (in the term of the letting as originally set forth) subsequent to the effective date of termination, and the denominator of which shall be the total number of months in the term of the letting as originally set forth.

(v) Notwithstanding any other provision of this Section in ascertaining the amount that the Port Authority shall be obligated to pay to the Lessee under said Section the cost computed as heretofore stated in this paragraph (c) shall be diminished by the amount that any part of the components of cost as stated in subdivisions (aa), (bb), and (cc) of subdivision (i) above are secured by liens, mortgages, other encumbrances or conditional bills of sale on such equipment, fixtures and improvements, unless such liens, mortgages, other encumbrances, or conditional bills of sale are paid and discharged of record prior to or simultaneously with the tender of payment of the prorated cost by the Port Authority to the Lessee; by the cost, if any incurred by the Port Authority to demolish the Lessee's facility upon the termination of the term of the letting and to restore the premises, and less any other amounts whatsoever due under this Agreement from the Lessee to the Port Authority. The Lessee may use any portion of the prorated cost tendered by the Port Authority to the Lessee to discharge of record any liens, mortgages, other encumbrances or conditional bills of sale on its equipment, fixtures and improvements. In no event whatsoever shall cost, as defined and computed in accordance with this paragraph (c) and as used in this Section include any expenses, outlays or charges whatsoever by or for the account of the Lessee for or in connection with any equipment or fixtures or the making of any improvement mentioned in this Section unless said equipment, fixtures and/or improvements are actually and completely installed in and/or made to the premises.

Section 57. Force Majeure

The Port Authority shall not be liable for any failure, delay or interruption in performing its obligations hereunder due to causes or conditions beyond the control of the Port Authority. Further, the Port Authority shall not be liable unless the failure, delay or interruption shall result from failure on the part of the Port Authority to use reasonable care to prevent or reasonable efforts to cure such failure, delay or interruption.

Section 58. Environmental Compliance

(a) The Lessee shall not dispose of, release or discharge nor permit anyone to dispose of, release or discharge any Hazardous Substance on, or under the premises or into any ditch, conduit, stream, storm sewer, or sanitary sewer connected thereto or located at the Facility. Any Hazardous Substance disposed of, released or discharged by the Lessee (or permitted by the Lessee to be disposed of, released or discharged) on the premises or at the Facility, shall upon notice by the Port Authority to the Lessee and subject to the provisions of all Environmental Requirements be completely removed and/or remediated by the Lessee. The obligations of the Lessee pursuant to this paragraph shall survive the expiration or termination of this Agreement.

(b) Upon the expiration or earlier termination of the letting hereunder, the Lessee shall at its sole cost and expense, remove or permanently close all underground storage tanks and associated piping in compliance with all environmental requirements including the conduct of a site assessment and performance of any necessary cleanup or remedial action. The Lessee shall provide the Port Authority with copies of all records relating to any underground storage tanks that are required to be maintained by any applicable environmental requirements.

(c) Promptly upon any termination of the letting hereunder, or when required by any applicable federal, state, or local regulatory authority, the Lessee shall perform, at its sole cost and expense, an environmental site assessment reasonably acceptable to the Port Authority to determine the event, if any, of contamination of the premises and shall, at its sole cost and expense, clean up, remove, and remediate (i) all Hazardous Substances in, on, or under the premises, (ii) any petroleum in, on, or under the premises in excess of allowable levels, and (iii) all contaminants and pollutants in, on, or under the premises that create or threaten to create a substantial threat to human health or the environment and that are required to be removed, cleaned up, or remediated by any and all applicable environmental requirements.

(d) The Lessee shall indemnify and save harmless the Port Authority from and against any and all liabilities, damages, suits, penalties, judgments, and environmental cleanup, removal, response, assessment, or remediation cost arising from contamination of the premises or release of any Hazardous Substance, pollutant, contaminant or petroleum in, on, or under the premises. The Lessee shall indemnify and save the Port Authority harmless from and against any and all loss of rentals or decrease in property values arising from Lessee's breach of paragraph (a) of this Section.

Section 59. <u>Space Licenses</u>

[INTENTIONALLY OMITTED]

Section 60. Certain Environmental Testing and Clean-up Obligations

(a) (1) Attached hereto, hereby made a part hereof is an exhibit marked "Exhibit M" which consists of the following Final Reports:

(i) "John F. Kennedy International Airport Building 124, Environmental Subsurface Baseline Investigation, Final Report, dated March 2000"(hereinafter sometimes referred to as "the Building 124 Final Report"); and

(ii) "John F. Kennedy International Airport Building 204, Environmental Subsurface Baseline Investigation, Final Report, dated March 2000" (hereinafter sometimes referred to as "the Building 204 Final Report"); and

(iii) "John F. Kennedy International Airport Building 125, Environmental Subsurface Baseline Investigation, Final Report, dated November 1999" (hereinafter sometimes referred to as "the Building 125 Final Report);

(v) Final Report associated with closure of NYS DEC Spill Report No. 9503852 shall be provided to the Lessee promptly upon submission to the NYDEC by the Port Authority.

Each of the three Final Reports collectively, identified as Exhibit M include appendices and compilation of reports and tests results of subsurface soil and groundwater samples taken on various dates as set forth in each Final Report, and analyzed for the following:

(i) Building 124 Final Report: Test results taken on the various dates set forth in said report from a total of ten (10) borings setting forth the levels of total petroleum hydrocarbons (TPHC), the constituents of the EPA Priority Pollutants plus 40 list including total xylenes (PP+40), methyl-tertiary-butyl ether (MTBE), and tert-butyl alcohol (TBA) all as more specifically named and set forth in Exhibit M;

(ii) Building 204 Final Report: Test results taken on the various dates set forth in said report from a total of ten (10) borings setting forth the levels of total petroleum hydrocarbons (TPHC), the constituents of the EPA Priority Pollutants plus 40 list including total xylenes (PP+40), methyl-tertiary-butyl ether (MTBE), and tert-butyl alcohol (TBA), all as more specifically named and set forth in Exhibit M;

(iii) Building 125 Final Report: Test results taken on the various dates set forth in said report from a total of seventeen (17) borings. Soil samples were analyzed for volatile organic compounds (VOC's), Semivolatile organic compounds (SVOCs), methyl-tertiary butyl ether (MTBE), poly-chlorinated biphenyls (PCBs), total petroleum hydrocarbons (TPHC), ethylene glycol and metals from the toxicity Characteristic Leaching Procedure (TCLP). Groundwater samples were analyzed for VOCs, MTBE, SVOCs, PCBs TPHC and ethylene glycol, all as more specifically named and set forth in Exhibit M;

(2) All of the aforesaid items for which the said samples were tested as set forth in Exhibit M ("Exhibit M") are hereinafter referred to as the "Analyzed Items."

(3) The Port Authority hereby represents to the Lessee and the Lessee acknowledges and agrees that the aforesaid Exhibit M as attached hereto contains and sets forth tests results and a report of subsurface environmental investigations performed at the Premises by or on behalf of the Port Authority prior to the execution of this Lease and for purposes of establishing the Initial Existing Condition as hereinafter defined.

(4) Further, the Lessee may, subject to the terms and conditions of Section 6 hereof and subject to the coordination requirements of subparagraph (b) (4) below, take other samples from various locations on the Premises selected by the Lessee and agreed to by the Port Authority which shall be analyzed by qualified personnel of an independent laboratory, mutually acceptable to the Port Authority and the Lessee, in accordance with State and Federal laws, ordinances, rules, regulations, requirements, orders or directions for petroleum and/or hazardous substance characterization and the results thereof shall be set forth in a report prepared by such laboratory and upon delivery of such report and tests results to the Port Authority, such report and test results shall become part of Exhibit M and of the Current

Remediation, as hereinafter defined, on condition and provided that: (i) the said sampling and testing were done in accordance with a methodology approved by the Port Authority; (ii) no part of such test results nor any such report shall become part of Exhibit M or of the Initial Existing Condition or of the Current Remediation unless all such samples, test results and the report are completed prior to the Completion Date, as hereinbefore defined in Section 6 hereof; (iii) that should such test results and report list contaminants not now set forth in Exhibit M as attached hereto on the execution date of this Lease or indicate a higher level of any of the Analyzed Items set forth in said Exhibit M then such contaminant or contaminants and such higher level or higher levels shall become part of Exhibit M only if the Lessee proves to the reasonable satisfaction of the Port Authority that such contaminant or contaminants and such higher level or higher levels existed in the Premises prior to the effective date of this Lease and provided, further, that such contaminant or contaminants and such higher level or higher levels were not caused by or did not result from any act or omission of the Lessee or of any of its agents, contractors or representatives; it being expressly understood and agreed that any such newly discovered contaminant or contaminants and such higher level or higher levels not so made a part of Exhibit M shall be included within the Lessee's sole responsibilities for contaminants and remediation at the Premises under paragraph (c) hereof.

(5) The said reports and tests results set forth in Exhibit M (including any supplemental reports and test results as may be called for under paragraph (b) hereof) for the purposes of this Lease, the levels of the Analyzed Items in the soil and upper aquifer in the Premises at the commencement of the term of the letting hereunder and are herein called the "Initial Existing Condition," and said reports and tests results produced in connection therewith and, together with the results of any subsequent reports and tests which may be made supplemental to or which may supersede those in Exhibit M or of the applicable portions thereof as provided for in paragraph (d) below as applied by the aforesaid methodology to all portions of the Premises, are, for purposes of this Lease, hereinafter called the "Existing Condition," provided, however, in no event shall the level of any Analyzed Item in any Existing Condition be above the lower of (i) the level of such Analyzed Item as set forth in the Initial Existing Condition, or (ii) the lowest level to which such Analyzed Item has been remediated to as shown in a succeeding Existing Condition.

(b) (1) It is hereby recognized by the parties hereto that as a result of the reporting of the Initial Existing Condition to the New York State Department of Environmental Conservation (hereinafter called the "DEC"), NYSDEC Spill Report No. 9503852, (covering areas in, around and under building No. 204) (x) the DEC may require further remedial investigation or remediation including all appropriate sampling borings and wells required for said remediation (which remediation is herein called the "Current Remediation") and that (y) the Port Authority and the DEC are currently undertaking discussions to establish a level to which each of the Analyzed Items in the ground water and soil in the Premises must be remediated by the Current Remediation (which level or levels as established for each of the Analyzed Items is hereinafter called a "Clean-Up Level"). The Port Authority and the Lessee shall jointly notify the DEC that, in connection with the Lessee's Construction Work under Section 6 hereof, the Lessee shall submit to the DEC a management plan which shall comply with the provisions of the JFK SPDES Permit, defined in Section 6(c)(21)(iii) above, and shall include, without limitation, discharge conditions, treatment or collection of site runoff and a detailed waste management

plan. All costs associated with the management plan, including, without limitation, excavation, storm water treatment and offsite soil disposal, shall be at the Lessee's sole cost and expense. It is understood and agreed solely with respect to and solely during and for the period of the Lessee's performance of the Construction Work, that said Current Remediation shall, as between the Lessee and the Port Authority, be deemed to include such further remediation as may be required by the DEC of any contaminant or contaminants discovered by the Port Authority during the performance of the Current Remediation or by the Lessee during the performance of the Construction Work and not now set forth in Exhibit M, provided, however, that such contaminant or contaminants are determined by the Port Authority to have been existing in the Premises prior to the effective date of this Lease and provided, further, that such contaminant or contaminants were not caused by or did not result from any act or omission of the Lessee or of any of its agents, contractors or representatives; and Exhibit M shall be supplemented to include the reports and test results of any such newly discovered contaminant or contaminants so included in the Current Remediation in accordance with the foregoing; it being expressly understood and agreed that any such newly discovered contaminant or contaminants not so made a part of the Current Remediation shall be deemed included within the Lessee's sole responsibilities for contaminant(s) and remediation at the Premises under paragraph (c) hereof. Neither the provisions of this Section nor any reference herein to the DEC or to the Port Authority's Current Remediation or to any governmental agency which may succeed to the DEC shall or shall be construed as any consent by the Port Authority to the jurisdiction of such agency over the Port Authority or its operations at the Airport or any waiver of any Port Authority position or policy with respect thereto.

(2) The Port Authority hereby recognizes that the Lessee may be performing the Construction Work, or portions thereof as the case may be, under Section 6 hereof concurrently with the performance of the Current Remediation and the Lessee hereby likewise recognizes that the performance of the Current Remediation may occur concurrently with the Lessee's performance of the Construction Work. The Port Authority agrees to consult with the Lessee in the scheduling of the Current Remediation so as to provide minimum interference with the Lessee's scheduling of the Construction Work and the Lessee likewise agrees to consult with the Port Authority in the Lessee's scheduling of the Construction Work, subject to the requirements of the DEC for the Current Remediation, so as to provide minimum interference with the Current Remediation.

(3) As between the Lessee and the Port Authority, and based on the Lessee's comprehensive plan and design of the Construction Work under Section 6 hereof, as and when approved by the Port Authority and as further described in and subject to paragraph (c) below, the Lessee shall not be responsible for the Current Remediation, except that the Lessee shall be responsible for any and all increased expenses including without limitation all costs and expenses relating thereto necessary, required, or appropriate as a result of, caused by, incidental to or triggered by any change in the said Lessee's comprehensive plan or any change in the design, method or scope of the Construction Work required under Section 6 hereof unless such change had theretofore received the prior review and the written approval of the Port Authority including the Port Authority's written consent in a writing signed by the Port Authority's Director of Aviation to the impact of such change on the Current Remediation (which

remediation costs and expenses for which the Lessee is so responsible is hereinafter called the "Lessee's Incremental Costs of the Current Remediation").

(4) Without limiting the generality of any provision of the Lease, in the event that any applicable governmental or regulatory environmental requirements set forth more than one compliance standard, the Port Authority and the Lessee agree that the standard or standards to be applied in connection with any obligation they each may have under the Lease with respect to environmental requirements shall be that which requires or permits the lowest level of a hazardous substance; provided, however, in the event that, after the completion of the Current Remediation, such lowest level of hazardous substance requires or allows the imposition of any restriction of any nature whatsoever upon the use or occupancy of the Premises or any other portion of the Facility or upon any operations or activities conducted or to be conducted on the Premises or the Facility, then the Lessee shall remediate and clean up to such a level so that there is no such restriction placed upon the use and occupancy of the Premises or the Facility or upon any operations or activities conducted or to be constructed on the Premises or the Facility.

(5) The Lessee further agrees that, the Port Authority shall have the right at any time and from time to time, acting in its sole discretion and without any obligation whatsoever to the Lessee or otherwise to do so, to designate any level or levels or standard or standards of remediation or cleanup permitted or required under any such environmental requirements, and such designation shall be binding upon the Lessee with respect to its obligations under the Lease with respect to such environmental requirements.

(c) Without limiting the generality of paragraph (b) hereof or any other term or provision of the Lease, the Lessee agrees to accept the Premises "as is" and, except as set forth in subparagraphs (1) through (5) below, to be solely responsible for any and all contaminants, and any and all soil and ground water or other contamination and remediation thereof, in and on the Premises, including without limitation, all costs and expenses thereof (including, without limitation the Lessee's Incremental Costs of the Current Remediation) and any and all claims, penalties or other expenses relating thereto. It is expressly understood and agreed that the proper handling, delivery, treatment, storage, transportation, disposal and depositing (all of the foregoing being hereinafter collectively called "Disposal"), whether on or off the Airport, of any soil, dirt, sand, water or other matter excavated, disturbed or removed by the Lessee (or by any contractor or contractors of the Lessee) at or from the Premises (or any other area of the Airport) at any time or times including, without limitation, any and all Disposal of such matter in connection with the performance of the Construction Work and any and all remediation and Disposal of such matter and any and all other remediation, Disposal and cleanup (whether soil, upper aquifer or otherwise) necessary, required or appropriate as a result of, caused by, incidental to or triggered by such excavation, disturbance or removal of such matter or arising therefrom, and the taking or doing of any and all other action or actions necessary, required or appropriate in connection therewith, and in accordance with all Environmental Requirements, shall be the sole and complete responsibility of the Lessee including, without limitation, all costs and expenses thereof and any and all claims, penalties or other expenses relating thereto. The foregoing obligations of the Lessee shall obtain and apply with full force and effect irrespective of the nature or source of any contaminant, pollutant, chemical, waste or other substance or whether any of the same is an Analyzed Item or whether any of the same is at a level or levels

above or below the level or levels of the Existing Condition or whether there has or has not been any increase in such level or levels. The Lessee shall perform all of the foregoing in accordance with and subject to all the terms, provisions, covenants and conditions of the Lease. Notwithstanding any other provision hereof to the contrary, the Lessee shall not be responsible for the following remediation of and contamination in and on the Premises:

(1) the Current Remediation except for the Lessee's Incremental Costs of the Current Remediation;

(2) contamination of soil and ground water caused by the acts and omissions of the Port Authority;

(3) remediation (exclusive of the Lessee's Incremental Costs of the Current Remediation) of the Existing Condition required solely by the DEC (or such other applicable governmental agency, if any, succeeding to the DEC and which has jurisdiction over the operations of the Port Authority at the Airport or with whose governmental requirements the Port Authority has agreed to conform) lowering below the Clean-Up Level for an Analyzed Item the level the DEC will accept on the Premises of such Analyzed Item;

(4) contamination caused solely by the flow of ground water or the leaching of soil from outside the Premises, to the extent not caused by or exacerbated by acts or omissions of the Lessee, its agents, representatives or contractors;

(5) contamination and contaminants existing in or on the Premises prior to the effective date of this Lease which are discovered subsequent to the establishment of the Existing Condition and are not listed in Exhibit M and the remediation thereof; except that the Lessee shall be solely responsible for such contamination and contaminants and the remediation thereof if (i) the Lessee is not able to or does not establish or prove to the satisfaction of the Port Authority that such contamination and contaminants in fact existed in or on the Premises prior to the effective date of this Lease, or (ii) if any such contamination or contaminants were caused by or resulted from any act or omission of the Lessee or of any of its agents, contractors or representatives;

(6) remediation of soil which is excavated by the Lessee in order for it to perform the Construction Work pursuant to and under Section 6 hereof and during the course of the Construction Work under Section 6 hereof and which soil is not used at the Site (as defined in Section 1 hereof); provided that (i) the Lessee shall deliver such soil at its sole expense to an on or off Airport location as designated by the Port Authority, (ii) the contaminant or contaminants in such soil were not caused by or did not result from any act or omission of the Lessee, and (iii) the Lessee is able to prove to the satisfaction of the Port Authority that such contaminant or contaminants, if not listed in Exhibit M, in fact existed in the Premises prior to the effective date of the Lease.

(d) Without limiting the generality of the provisions of Section 22 of this Lease, the Port Authority and its designees shall have the right but not the obligation to enter upon the Premises upon forty-eight (48) hours' notice (or such shorter notice period as may be

required by the DEC or such other governmental agency or agencies as described above) to the Lessee to conduct testing and related activities from the wells made by borings referred to in paragraph (a) above, to make additional borings and wells and to conduct testing and related activities therefrom, and to perform such activities as shall be necessary to perform the Current Remediation as and to the extent set forth in paragraph (b) above and to otherwise remediate the Existing Condition to the extent the Lessee is not required to do so by this Section, including but not limited to, conducting pumping from the wells made by borings referred to in paragraph (a) above and in this paragraph (d). In the exercise of the foregoing rights the Port Authority shall not unreasonably interfere with the use and occupancy of the Premises by the Lessee.

(e) If after any remediation performed on the Premises, whether by the Lessee, the Port Authority or a third party(ies), the Port Authority shall sample and test the soil and/or aquifer of the Premises or portions thereof and shall set forth the results of such samplings and tests in a report (it being understood however that the Port Authority shall not have any obligation to perform such sampling, testing or to set forth such results in a report), upon delivery of such report and test results to the Lessee, such report and test results shall supersede and replace Exhibit M or the applicable portions thereof if the test results and reports are of Analyzed Items which have been previously tested and the results thereof reported in Exhibit M from the same well or boring or a new well or boring which is immediately adjacent to such well or boring and shall supplement Exhibit M or the applicable portions thereof if the test results and reports would not supersede any test results and reports in Exhibit M as aforesaid, and the said results of such report setting forth the levels of the Analyzed Items in the soil and upper aquifer of the Premises together with those portions of Exhibit M which have not been replaced shall thereafter upon such delivery thereafter to the Lessee be and be deemed to be the "Existing Condition" under this Section; provided, however, and notwithstanding the foregoing, and subject to and in accordance with this Section, in no event shall the level of any Analyzed Item in any Existing Condition be above the level for such Analyzed Item as set forth in the Initial Existing Condition or the lowest level to which such Analyzed Item has been remediated.

(f) Without limiting the generality of the provisions of Section 12 of the Lease, the Lessee agrees to protect and maintain the wells made by the borings referred to in paragraph (a) above and shall repair any damage thereto not caused by the activities of the Port Authority or its designees, if any, pursuant to paragraphs (e) above. If in connection with the Construction Work under Section 6 hereof it is necessary to fill any of the said wells, then, provided that such filling is permitted or approved by the Port Authority and provided that the Current Remediation may in the determination of the Port Authority proceed with a replacement well or wells, the Lessee shall perform all work (other than the filling of the well or wells) necessary or required for a replacement well or wells in accordance with the terms and provisions of the Lease and the related Construction Application(s) to be submitted by the Lessee covering such work in accordance with Section 6 hereof, as the same may be approved by the Port Authority, and, further, the Lessee hereby agrees that all costs and expenses for and in connection with the drilling of a new well or wells to replace the filled well or wells shall be borne solely by the Lessee without any reimbursement from the Port Authority. The obligation of the Lessee to protect and maintain the wells as set forth in the first sentence of this paragraph (f) shall be deemed to also pertain and apply to any and all such replacement wells.

(g) The terms and conditions of this Section are intended to allocate obligations and responsibilities between the Lessee and the Port Authority. Nothing in this Section 60 shall limit, modify or otherwise alter the rights and remedies which the Port Authority or Lessee may have against third parties at law, equity or otherwise.

Section 61. Books and Records

In addition to and without limiting the provisions of the Section of this Agreement entitled "Definitions" hereof or any term or provision of this Agreement, the Lessee shall keep in an office or offices in the Port of New York District, appropriate books and records showing (i) all matters with respect to the costs of the construction work; (ii) all matters which the Lessee is required to certify to the Port Authority pursuant to this Lease and (iii) any and all other matters concerning the Lessee's operations at the Airport with respect to which the Port Authority may reasonably need information to fulfill its obligations or exercise its rights under this Lease whether or not of the type enumerated above in this Section and whether or not an express obligation to keep books and records with regard thereto is expressly set forth elsewhere in this Lease. The Lessee shall not be obligated to preserve any such records for more than seven (7) years after the receipt of revenues or occurrences of charges or expenses hereunder unless they are material to litigation initiated within that time, in which event they shall be preserved until the final determination of the controversy. The Port Authority shall have the right to audit and inspect such books and records during regular business hours.

Section 62. Other Agreements

The Lessee shall not, by virtue of the execution of this Agreement, be released or discharged from any obligations or liabilities whatsoever under any other agreements with the Port Authority.

Section 63. Operating Names

(a) Any name, designation or any service mark proposed to be used or displayed at the premises or for the Lessee's operations therein shall be approved in advance in writing by the Port Authority and the Lessee shall have the right to use and display the name, designation or mark only so long as this Agreement is in force and effect. If for any reason the Lessee ceases its operations in the premises, the Lessee's right to use such name, designation or service mark shall immediately cease and come to an end and the Port Authority or its designee shall have the sole right to use such name, designation or service mark and the Lessee hereby consents to such use thereof. Any registration or filing by the Lessee with respect to such name, designation or service marks shall indicate the Port Authority's interest therein and the form thereof shall be approved in advance by the Port Authority in writing. The Lessee agrees to assign and transfer to the Port Authority any such registration or filing and any other rights in or to the use of such name, designation or service mark promptly upon written request therefor from the Port Authority.

Nothing herein contained is intended to apply to the continuing use by the Lessee of its customary name, designation or service mark used elsewhere in its operations prior to its making of this Agreement.

Section 64. Security Deposit

(a) Letter of Credit Required. Upon the Lessee's execution and delivery of this Agreement to the Port Authority, the Lessee shall deliver to the Port Authority, and shall maintain throughout the term of this Agreement as security for the Lessee's full, faithful and prompt performance of and compliance with all of its obligations under this Agreement and as security for the payment of all rentals, fees, charges and obligations of the Lessee owed or which may become due and owing to the Port Authority, a clean irrevocable letter of credit in favor of the Port Authority in the amount of Three Hundred Eighty Thousand Dollars and No Cents ($380,000.00), issued by a banking institution acceptable to the Port Authority and having its main office within the Port of New York District.

(b) Form Subject to Prior Approval. The form and terms of each letter of credit delivered under this Section, as well as the institution issuing it (which shall be an investment-grade rated bank), shall be subject to the prior and continuing approval of the Port Authority; the form of any proposed letter of credit shall be submitted to the Port Authority in advance for review and approval by its Credit, Collection and Accounts Receivable unit. Such letter of credit shall provide that it shall continue throughout the term of the letting under this Agreement and for a period of not less than six (6) months thereafter; such continuance may be by provision for automatic renewal or by substitution of a subsequent satisfactory letter of credit.

(c) Replacements. Upon notice of cancellation of a letter of credit, the Lessee agrees that unless, by a date twenty (20) days prior to the effective date of cancellation, the letter of credit is replaced by another letter of credit satisfactory to the Port Authority, the Port Authority may draw down the full amount thereof and thereafter the Port Authority will hold the same as cash security as set forth in paragraph (g) of this Section. If at any time any bank shall fail to make any payment to the Port Authority in accordance with a letter of credit issued by such bank, the Lessee shall cause to be delivered to the Port Authority on demand a replacement letter of credit issued by a different bank satisfactory to the Port Authority, so that at all times the Port Authority shall have one or more letters of credit in the amount set forth in paragraph (a) of this Section.

(d) Right to Draw Down. In addition to any and all other remedies available to it, the Port Authority shall have the right, at its option at any time and from time to time, with or without notice, to draw upon each letter of credit or any part thereof in whole or partial satisfaction of any of its claims or demands against the Lessee. There shall be no obligation on the Port Authority to exercise such right and neither the existence of such right nor the holding of a letter of credit or any cash security shall cure any default or breach of this Agreement on the part of the Lessee. No action by the Port Authority pursuant to the terms of any letter of credit, or receipt by the Port Authority of funds from any bank issuing any letter of credit, shall constitute a waiver of any breach or default by the Lessee of its obligations under this Agreement; and the existence of or recourse to any such letter of credit shall not limit the Port

Authority's rights and remedies otherwise available under this Agreement upon any such breach or default.

(e) Material Inducement. The Lessee acknowledges that the Port Authority is entering into this Agreement in reliance on the Lessee's agreement to the provisions of this Section, and that such agreement constitutes a material element of the consideration inducing the Port Authority to enter into and execute this Agreement. Accordingly, in the event of any failure of the Lessee at any time during the term of the letting under this Agreement to provide such letter of credit valid and available to the Port Authority, and any failure of any banking institution issuing any such letter of credit to make one or more payments as provided in such letter of credit, the Port Authority shall have the right, in addition to any and all other remedies provided under this Agreement or at law or in equity, to immediately terminate this Agreement upon written notice to the Lessee.

(f) Replenishment. If the Port Authority shall make any drawing under a letter of credit held by the Port Authority hereunder, the Lessee, within two (2) days after demand of the Port Authority therefor, shall bring the letter of credit back up to its full amount.

(g) Use of Proceeds. In the event that the Port Authority shall have drawn down the letter of credit referred to in paragraph (a) of this Section, the Port Authority shall have the right, at its option, at any time and from time to time, with or without notice, to use the amount held, or any part thereof, as cash security in whole or partial satisfaction of any of its claims or demands against the Lessee. There shall be no obligation on the Port Authority to exercise such right and neither the existence of such right nor the holding of such cash security itself shall cure any default or breach, on the part of the Lessee, of this Agreement. The Lessee agrees that it will not assign, mortgage or encumber such cash security. The Port Authority shall not pay or allow interest thereon; but the Lessee may collect or receive annually any interest paid on cash deposited in interest-bearing bank accounts less any part thereof or amount which the Port Authority is or may hereafter be entitled or authorized by law to retain or to charge in connection therewith, whether as or in lieu of administrative expense or custodial charge, or otherwise, provided, however, that the Port Authority shall not be obligated by this provision to place or to keep cash deposited hereunder in interest-bearing bank accounts. Upon the Port Authority's acceptance of a substitute letter of credit, and upon request by the Lessee made thereafter, the Port Authority will return any cash security deposit resulting from the drawing down of the original letter of credit. The Lessee shall have the same rights to receive any such deposit during the existence of a valid letter of credit as it would have to receive such sum upon expiration of the letting and fulfillment of the obligations of the Lessee under this Agreement.

(h) After Expiration or Termination. After the expiration of the letting and upon written request therefor by the Lessee, the Port Authority will return to the Lessee any valid letters of credit and any cash security delivered to the Port Authority by the Lessee hereunder, less the amount of any and all unpaid claims and damages of the Port Authority under this Agreement. Upon a termination of the letting, the Port Authority may, at its option, retain the letter of credit and any cash security until the date set forth in paragraph (b) of this Section (as such date may be extended in connection with any extended term of the letting hereunder) and shall thereafter upon demand of the Lessee return the same to the Lessee less the amount of any

and all unpaid claims and damages, including but not limited to estimated damages of the Port Authority under this Agreement.

(i) ***Employer Identification Number.*** For purposes of the foregoing, the Lessee hereby certifies that its I.R.S. Employer Identification Number is

Section 65. Additional Right of Termination by the Port Authority

Further, in the event the Port Authority exercises its right to terminate this Agreement for any reason other than "without cause", the Lessee shall be obligated to pay to the Port Authority an amount equal to all costs and expenses reasonably incurred by the Port Authority in connection with such revocation or termination, including without limitation any re-entry, regaining or resumption of possession, collecting all amounts due to the Port Authority, the restoration of any premises which may be used and occupied under this Agreement (on failure of the Lessee to have it restored), preparing such premises for use by a succeeding lessee, the care and maintenance of such premises during any period of non-use of the premises, the foregoing to include, without limitation, personnel costs and legal expenses (including but not limited to the cost to the Port Authority of in-house legal services), repairing and altering the premises and putting the premises in order (such as but not limited to cleaning and decorating the same).

Section 66. Refurbishment Plan

The Lessee shall expend not less than One Hundred Thousand Dollars and no Cents ($100,000,00.) (the "Minimum Capital Investment") commencing immediately after the third anniversary of the Rental Payment Start Date and every third year thereafter during the balance of the term of the letting, including the Option Period, if any, for improvements and aesthetics with respect to the Refurbishment Plan finally consented to by the Port Authority. The Minimum Capital Investment shall: (i) apply each time the Lessee shall upgrade and renovate the facilities, (ii) and shall be exclusive of and in addition to any of the following amounts: (1) the cost of items with a useful life of less than three years; (2) the cost of architectural, engineering, professional and consulting services, to the extent such costs exceed twelve percent (12%) of the total amount of capital investment; (3) interest and financing charges; and (4) the Lessee's overhead expense.

Section 67. Contract of Guaranty

Effective on the date hereof, the Lessee assigned to JFK AP LLC, a limited liability company organized and existing under the laws of the State of Delaware (the "Assignee"), and its successors to its and their own proper use, benefit and behoof forever, the Lease, to have and to hold the same unto the Assignee, and its successors, from December 1, 2011, for and during all the rest, residue and remainder of the term of the letting under the Lease, subject nevertheless to all the terms, provisions, covenants and conditions herein contained. The Lessee shall provide and maintain in full force and effect throughout the term of the letting under this Agreement a contract of absolute and unconditional guaranty of the due and punctual payment of the rental obligations of the Assignee and of the full, faithful and prompt performance, observance and

fulfillment on the part of the Assignee of all of the other terms, covenants and conditions of this Agreement to be kept, performed, observed and fulfilled and such Contract of Guaranty shall be in the form annexed hereto and shall be executed by the Lessee, simultaneously with the execution of this Agreement.

Section 68. Entire Agreement

This Agreement consists of the following: Sections 1 through 68 and Exhibits A, B, C, D, E, M, X, Y, Schedules E and F and Contract of Guaranty. It constitutes the entire agreement of the parties on the subject matter hereof and may not be changed, modified, discharged or extended except by written instrument duly executed by the Port Authority and the Lessee. The Lessee agrees that no representations or warranties shall be binding upon the Port Authority unless expressed in writing in this Agreement.

IN WITNESS WHEREOF, the parties hereto have executed these presents as of the day and the year first above written.

ATTEST:

Secretary

THE PORT AUTHORITY OF NEW YORK AND NEW JERSEY

By _____
David Kagan
Assistant Director

(Title) Business, Properties & Airport Development

ATTEST:

Secretary

GAZ REALTY, INC.

By _____
George A. Reid

(Title) President

(Corporate Seal)

Port Authority Use Only	
Approval as to Terms:	Approval as to Form:

PERFORMANCE AND PAYMENT BOND

KNOW ALL MEN BY THESE PRESENTS that we, the undersigned[1] Contractor and surety company (or companies), as principal and surety (or sureties), respectively,

Contractor	Surety

are hereby held and firmly bound unto The Port Authority of New York and New Jersey (herein called the "Authority") in the penal sum of _____ Dollars and _____ Cents ($ _____.), for the payment of which, well and truly to be made, we hereby jointly and severally bind ourselves, our heirs, representatives, executors, administrators, successors and assigns. Each surety, however, if there is more than one, shall be jointly and severally liable for said penal sum.

Signed this _____ day of _____ 20

The condition of the above obligation is that

WHEREAS, the above named principal has entered into a Contract in writing with the Authority, a copy of which is hereby made a part of this bond as though herein set forth in full and which is designated Contract [insert Contract Number] "JFK International Airport - [Insert Name of Project], and

WHEREAS, the Authority has required this bond for the faithful performance of all obligations imposed by said Contract and also for the payment of all lawful claims of subcontractors, materialmen and workmen arising out of the performance of said Contract;

NOW, if the said principal shall well and faithfully do and perform the things agreed by him to be done and performed according to the terms and true intent and meaning of said Contract and if all lawful claims of subcontractors, materialmen and workmen arising out of the performance of said Contract are paid, then this obligation shall be void, otherwise the same shall remain in full force and effect; it being expressly understood and agreed that, provided the sureties shall comply with the provisions hereof, the aggregate liability of all sureties for any and all claims hereunder shall in no event exceed the penal amount of this obligation as hereinbefore stated.

This undertaking is for the benefit the Authority and all subcontractors, materialmen and workmen having lawful claims arising out of the performance of said Contract, and all such subcontractors, materialmen and workmen (as well as the Authority itself) shall have a direct right of action upon this

---

1 Insert names of the Contractor and surety company (or companies) in the appropriate columns. If space is insufficient add rider.
If the Contractor is a corporation, give the state of incorporation, using also the phrase "a corporation organized under the laws of _____".
If the Contractor is a partnership, give full names of partners, using the phrase "co-partners doing business under the firm name of _____".
If the Contractor is an individual using a trade name, give individual name, using also the phrase "an individual doing business under the trade name of _____.".

bond; but the rights and equities of such subcontractors, materialmen and workmen shall be subject and subordinate to those of the Authority.

The sureties, for value received, hereby stipulate and agree that the obligations of said sureties and their bond shall be in no way impaired or affected by any extensions of time, modification, omission, addition or change in or to the said Contract or the construction to be performed thereunder, or by any supervision or inspection or omission to supervise or inspect the construction, or by any payment thereunder before the time required therein, or by any waiver of any provision or condition thereof (whether precedent or subsequent), or by any assignment, subletting or other transfer thereof or of any part thereof or of any construction to be performed or any moneys due or to become due thereunder; and said sureties do hereby waive notice of any and all of such extensions, modifications, omissions, additions, changes, payments, waivers, assignments, subcontracts and transfers, and hereby expressly stipulate and agree that any and all things done and omitted to be done by and in relation to assignees, subcontractors and other transferees shall have the same effect as to said sureties as though done by or in relation to said principal.

The sureties shall give the General Counsel of the Authority the following notices:

A. Written notice of an intent to pay any claim of a subcontractor, materialman or workman hereunder;

B. Written notice within five days of the institution of an action by a subcontractor, materialman or workman hereunder.

The sureties shall not pay the claim of any subcontractor, materialman or workman hereunder until the expiration of thirty days after receipt by said General Counsel of notice under either subparagraph A or B above, describing the claim to be paid.

IN WITNESS WHEREOF, the principal and the sureties have hereunto set their hands and seals, and such of them as are corporations have caused their corporate seals to be hereto affixed and these presents to be signed by their proper officers, the day and year first set forth above.

_____
Principal

(Seal) By [2] _____

_____
Surety

By[3] _____

APPROVED AS TO ACCEPTABILITY OF SURETIES:

_____
Credit Manager

_____ 20

2 If bond is signed by an officer or agent, give title; if signed by a corporation, affix corporate seal.

3 Add signatures of additional sureties, if any.

ACKNOWLEDGMENT OF PRINCIPAL, IF A CORPORATION

State of _____
_____ SS:
County of _____

On this _____ day of _____, 20 , before me personally came and appeared _____, to me known, who being by me duly sworn, did depose and say that he resides at _____; that he is the _____, of _____ the corporation described in and which executed the foregoing instrument; that he knows the seal of said corporation; that one of the seals affixed to said instrument is such seal; that it was so affixed by order of the directors of said corporation, and that he signed his name thereto by like order.

(Notary Seal) _____
(Notary Signature)

ACKNOWLEDGMENT OF PRINCIPAL, IF A PARTNERSHIP

State of _____
_____ SS:
County of _____

On this _____ day of _____, 20 , before me personally came and appeared _____, to me known, and known to me to be one of the members of the firm of _____ _____ described in and who executed the foregoing instrument and he acknowledged to me that he executed the same as and for the act and deed of said firm.

(Notary Seal) _____
(Notary Signature)

ACKNOWLEDGMENT OF PRINCIPAL, IF AN INDIVIDUAL

State of _____
_____ SS:
County of _____

On this _____ day of _____, 20 , before me personally came and appeared _____, to me known and known to me to be the person described in and who executed the foregoing instrument and he acknowledged to me that he executed the same.
(Notary Seal) _____
(Notary Signature)

AFFIX ACKNOWLEDGMENT AND JUSTIFICATION OF SURETY

New York State Department of Environmental Conservation
47-40 21st Street, Long Island City, NY 11101
Telephone (718) 482-4928, fax (718) 482-6390

Erin M. Crotty
Commissioner

July 22, 2003

Marvin Kirshner
The Port Authority of NY & NJ
EADD Environmental Group
2 Gateway Center, 14th Floor SW
Newark, New Jersey 07102

Re: Building 125, JFKIA. NYSDEC Spill Report No. 9830016.
Schedule E, NYSDEC File No. R2-3519-91-02.

Dear Mr. Kirshner:

New York State Department of Environmental Conservation Spill Report No. 9830016 has been closed. An updated copy of the report is attached for your file. Closure (i.e., no further action) is based, in part, on findings presented in a report prepared by The Port Authority of NY & NJ dated March 4, 2003. The report provides sufficient data to show that low-level ground water contaminants are naturally attenuating following previous source removal and active remediation.

With respect to imminent site redevelopment, potentially contaminated materials (e.g., soil) must be managed in accordance with applicable Department guidance and regulations. Notwithstanding a no further action determination with regard to the aforementioned spill report, the Department hereby reserves all of its rights concerning, and such forbearance shall not extend to, any further investigation or remedial action the Department deems necessary:

- Due to off-site migration of petroleum contaminants that was not addressed by this evaluation;
- Due to environmental conditions related to the site which were unknown to the Department at the time of this approval;
- Due to information received, in whole or part, after the Department's approval for closure which indicates that the no further action decision is not sufficiently protective of human health for the reasonably anticipated use of the site;
- Due to fraud in obtaining this closure;
- Due to contamination as identified by any future site assessment directed by 40 CFR 280.

If you wish to discuss this letter please call me at 718.482.4928.

Very truly yours,

Steven Miller, Engineering Geologist
Spills Management, DER

Cc: Denise Branch - Thzaira Charles - Tom Chen, Port Authority of NY & NJ

EXHIBIT "D"

LEASE AYE- 048
LESSEE'S OWNERSHIP STRUCTURE

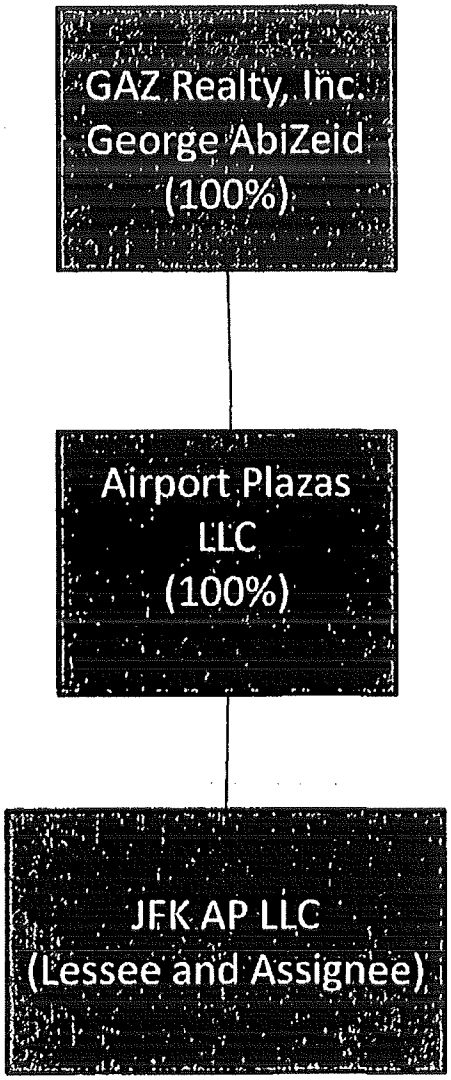

Note: The Lessee's continuing obligation to update the information set forth herein is subject to the provisions of Section21 (g).

EXHIBIT "E"

EXHIBIT M

Certain Environmental Testing and Clean-up Obligations

See Volume II of II

(1) The Building 124 Final Report: "John F. Kennedy International Airport Building 124, Environmental Subsurface Baseline Investigation, Final Report, dated March 2000"

(2) The Building 204 Final Report: "John F. Kennedy International Airport Building 204, Environmental Subsurface Baseline Investigation, Final Report, dated March 2000"

(3) The Building 125 Final Report: "John F. Kennedy International Airport Building 125, Environmental Subsurface Baseline Investigation, Final Report, dated November 1999"

EXHIBIT X

CONSENT TO SUBLEASE
Port Authority Lease No.
(said Lease being dated as of)

THIS AGREEMENT, made as of by and among THE PORT AUTHORITY OF NEW YORK AND NEW JERSEY (hereinafter called the "Port Authority"), a body corporate and politic, created by Compact between the States of New Jersey and New York, with the consent of the Congress of the United States of America and having an office at 225 Park Avenue South, in the Borough of Manhattan, City, County and State of New York, and

(hereinafter called the "Lessee"), and

,

a corporation organized and existing under the laws of
having an office at

(hereinafter called the "Sublessee"),
whose representative is,

WITNESSETH, That:

WHEREAS, the Port Authority and the Lessee have entered into a lease identified above by Port Authority Lease Number and by date and covering premises at the Port Authority in the Borough of Manhattan, County of City and State of New York (which lease, as the same may have been or may hereafter be supplemented and amended is hereinafter called the "Lease"); and

WHEREAS, the Lessee has requested the consent of the Port Authority to a proposed sublease, a copy of which is attached hereto and made a part hereof and is hereinafter called the "Sublease";

NOW, THEREFORE, for and in consideration of the covenants and mutual agreements herein contained, the Port Authority, the Lessee and the Sublessee hereby agree as follows:

1. On the terms and conditions hereinafter set forth the Port Authority consents to the Sublease.

2. The Sublease shall terminate and expire, without notice to the Sublessee, on the day preceding the date of expiration or earlier termination of the Lease, or on such earlier date as the Lessee and Sublessee may agree upon or on the effective date of any revocation of this Consent by the Port Authority. The Sublessee shall quit the subleased premises and remove its property and property for which it is responsible therefrom on or before the termination or expiration of the Sublease.

3. If the Lessee shall at any time be in default under the Lease, the Sublessee shall on demand of the Port Authority pay directly to the Port Authority any rental, fee or other amount due to the Lessee. No such payment shall relieve the Lessee from any obligations under the Lease or under this Consent or affect the Port Authority's rights or remedies thereunder but all such payments shall be credited against the obligations of the Lessee or of the Sublessee, as the Port Authority may determine, for each payment or part thereof.

4. In any case of difference between the provisions of the Lease or of this Consent and the provisions of the Sublease, the provisions of the Lease or of this Consent, as the case may be, shall be controlling, it being the intention of the Port Authority merely to permit the exercise of the Lessee's rights (to the extent permitted by the Sublease) by the Sublessee, and not to enlarge or otherwise change the rights granted by the Lease. All of the terms, provisions and conditions of the Lease shall be and remain in full force and effect.

5. The Sublessee, in its operations under or in connection with the Sublease and in its occupancy of the subleased premises, agrees to assume, observe, be bound by and comply with all the terms, provisions, covenants and conditions of the Lease. Without limiting the generality of the foregoing, the Sublessee shall use the subleased premises for the following purposes and for no other purpose whatsoever:

6. Without in any wise affecting the obligations of the Lessee under the Lease and under this Consent, the Sublessee agrees with respect to its acts and omissions to indemnify the Port Authority and to make repairs and replacements as if it were the Lessee under the Lease. However, all acts and omissions of the Sublessee shall be deemed to be acts and omissions of the Lessee under the Lease and the Lessee shall also be severally responsible therefor, including but not limited to the obligations of indemnification and repair.

7. In addition to all other remedies available to the Port Authority under the Lease or otherwise, this Consent may be revoked by the Port Authority by notice to the Lessee and the Sublessee in the event of any breach by the Sublessee of any term or provision of the Lease or of this Consent and no such revocation shall be deemed to affect the Lease or the continuance thereof. Any notice given to the Sublessee shall be sufficient if given in accordance with the Section of the Lease entitled *"Notices"*, for the purpose of which the Sublessee hereby designates the person named as representative on the first page hereof as its officer or representative upon whom notices may be served and the Sublessee designates its office at the address stated on the first page hereof as the office where such notices may be served.

8. The Lessee and the Sublessee represent and warrant that the attached Sublease sets forth the full and entire rental or other consideration payable to the Lessee by the Sublessee for or in connection with the subletting hereunder or use or occupancy of the subleased premises and they further represent and warrant that there is no rental or consideration other than as stipulated in the attached Sublease.

9. The granting of this Consent by the Port Authority shall not be or be deemed to operate as a waiver of the requirement for consent to any subsequent subletting (by the Lessee or by the Sublessee) or to any assignment of the Lease or the Sublease or of any rights under either of them, whether in whole or in part.

10. References herein to the Sublessee shall mean and include the Sublessee, its officers, agents, employees and also others on the premises or the Facility with the consent of the Sublessee.

11. Neither the Commissioners of the Port Authority nor any of them, nor any officer, agent or employee thereof shall be held personally liable to the Lessee or to the Sublessee under any term or provision of this Consent or because of its execution or because of any breach or alleged breach thereof.

IN WITNESS WHEREOF, the Port Authority, the Lessee and the Sublessee have executed these presents.

ATTEST:

THE PORT AUTHORITY OF NEW YORK AND NEW JERSEY

_____
Secretary

By_____

(Title)_____

(Seal)

ATTEST:

_____
Lessee

_____
Secretary

By_____

(Title)_____

ATTEST:

_____
Sublessee

_____
Secretary

By_____

(Title)_____

(Corporate Seal)

STATE OF NEW YORK)
)ss.:
COUNTY OF NEW YORK)

On the day of in the year 20 , before me, the undersigned, a Notary Public in and for said state, personally appeared
personally known to me or proved to me on the basis of satisfactory evidence to be the individual whose name is subscribed to the within instrument and acknowledged to me that he/she executed the same in his/her capacity, and that by his/her signature on the instrument the person upon behalf of which the individual acted, executed the instrument.

(Notarial Seal and Stamp)

STATE OF)
)ss.:
COUNTY OF)

On the day of in the year 20 , before me, the undersigned, a Notary Public in and for said state, personally appeared
personally known to me or proved to me on the basis of satisfactory evidence to be the individual whose name is subscribed to the within instrument and acknowledged to me that he/she executed the same in his/her capacity, and that by his/her signature on the instrument the person upon behalf of which the individual acted, executed the instrument.

(Notarial Seal and Stamp)

STATE OF)
)ss.:
COUNTY OF)

On the day of in the year 20 , before me, the undersigned, a Notary Public in and for said state, personally appeared
personally known to me or proved to me on the basis of satisfactory evidence to be the individual whose name is subscribed to the within instrument and acknowledged to me that he/she executed the same in his/her capacity, and that by his/her signature on the instrument the person upon behalf of which the individual acted, executed the instrument.

(Notarial Seal and Stamp)

EXHIBIT Y

THIS CONSENT TO ASSIGNMENT WITH ASSUMPTION AGREEMENT SHALL NOT BE BINDING UPON THE PORT AUTHORITY UNTIL DULY EXECUTED BY AN EXECUTIVE OFFICER THEREOF AND DELIVERED TO THE ASSIGNOR AND ASSIGNEE BY AN AUTHORIZED REPRESENTATIVE OF THE PORT AUTHORITY

John F. Kennedy Airport
Port Authority Lease No.

CONSENT TO ASSIGNMENT WITH ASSUMPTION AGREEMENT

THIS AGREEMENT, dated as of the 1st day of , by and among **THE PORT AUTHORITY OF NEW YORK AND NEW JERSEY**, a body corporate and politic created by Compact between the States of New York and New Jersey, with the consent of the Congress of the United States of America, having an office for the transaction of business at 225 Park Avenue South, New York, New York 10003 (hereinafter called the "Port Authority"), , a corporation, formerly organized under the laws of the State of (hereinafter called the "Assignor"), and a corporation organized and existing under the laws of the State of , having an office and place of business at (hereinafter called the "Assignee"), whose representative is .

WITNESSETH, That:

WHEREAS, heretofore and as of the day of , the Port Authority and the Assignor entered into a lease identified by Port Authority Lease Number (hereinafter, as the same may have been heretofore amended, extended and supplemented, called the "Lease"), covering certain premises at JFK Airport, in the Borough of Queens, City and State of New York, all as more particularly described in the Permit; and

WHEREAS, the Assignor desires to assign the Lease to the Assignee and the Assignee is desirous of acquiring the Lease and becoming the Lessee of the Port Authority thereunder; and

WHEREAS, the Port Authority is willing to consent to such assignment of the Lease from the Assignor to the Assignee on certain terms, provisions, covenants and conditions as hereinafter set forth;

NOW, THEREFORE, for and in consideration of the covenants and mutual agreements herein contained, the Port Authority, the Assignor and the Assignee hereby agree as follows:

1. The Assignor does hereby assign, transfer and set over to the Assignee, and its successors to its and their own proper use, benefit and behoof forever, the Lease, to have and to hold the same unto the Assignee, and its successors, from , for and during all the rest, residue and remainder of the term of the permission under the Lease, subject nevertheless to all the terms, provisions, covenants and conditions therein contained; and the Assignor does hereby assign, transfer and set over unto the Assignee, and its successors, all right, title and interest of the Assignor in and to a certain deposit (whether of cash or bonds) in the amount of Thousand Dollars and No Cents ($ 000,000.00) made by the Assignor with the Port Authority as security for the performance of the terms, provisions, covenants and conditions of the Lease but subject to the provisions of the Lease and to any claim or right to the said deposit or any part thereof heretofore or hereafter made or to be made on the part of the Port Authority.

2. The Port Authority hereby consents to the foregoing assignment. Notwithstanding anything herein to the contrary, the granting of such consent by the Port Authority shall not be, or be deemed to operate as, a waiver of the requirements for consent (or consents) to each and every subsequent assignment by the Assignee or by any subsequent assignee, nor shall the Assignor be relieved of liability under the terms, provisions and conditions of the Lease by reason of this consent of the Port Authority of one or more other consents to one or more other assignments thereof.

3. The Assignor agrees that this assignment of the Lease and this consent of the Port Authority thereto shall not in any way whatsoever affect or impair the liability of the Assignor to perform all the terms, provisions and conditions, including without limitation thereto the obligation to pay fees, of the Lease on the part of the Lessee thereunder to be performed and that the Assignor shall continue fully liable for the performance of all the terms, provisions, covenants and conditions, including without limitation thereto the obligation to pay fees, on the part of the Lessee thereunder to be performed. The liability of the Assignor as set forth in this paragraph shall remain and continue in full force and effect as to any and every renewal, modification or extension of the Lease whether in accordance with the terms of the Lease or by a separate or additional document, and notwithstanding any such renewal, modification or extension, whether or not the Assignor has specifically consented to such renewal, modification or extension. The liability of the Assignor hereunder shall in no way be affected by the failure of the Port Authority to obtain the Assignor's consent to any such renewal, modification or extension notwithstanding that the Port Authority has previously obtained such consent with respect to a prior renewal, modification or extension.

4. The Assignee does hereby assume the performance of and does hereby agree to perform all the terms, provisions and conditions, including without limitation thereto the obligation to pay fees, contained in the Lease to be performed on the part of the Lessee thereunder as though the Assignee were the original signatory to the Lease. The execution of this instrument by the Port Authority does not constitute a representation by it that the Assignor has performed or fulfilled every obligation required by the Lease; as to such matters, the Assignee agrees to rely solely upon the representation of the Assignor.

5. The liability of the Assignor hereunder shall in no way be affected by:

EXHIBIT Y

THIS CONSENT TO ASSIGNMENT WITH ASSUMPTION AGREEMENT SHALL NOT BE BINDING UPON THE PORT AUTHORITY UNTIL DULY EXECUTED BY AN EXECUTIVE OFFICER THEREOF AND DELIVERED TO THE ASSIGNOR AND ASSIGNEE BY AN AUTHORIZED REPRESENTATIVE OF THE PORT AUTHORITY

John F. Kennedy Airport
Port Authority Lease No.

CONSENT TO ASSIGNMENT WITH ASSUMPTION AGREEMENT

THIS AGREEMENT, dated as of the 1st day of , by and among **THE PORT AUTHORITY OF NEW YORK AND NEW JERSEY,** a body corporate and politic created by Compact between the States of New York and New Jersey, with the consent of the Congress of the United States of America, having an office for the transaction of business at 225 Park Avenue South, New York, New York 10003 (hereinafter called the "Port Authority"), , a corporation, formerly organized under the laws of the State of (hereinafter called the "Assignor"), and a corporation organized and existing under the laws of the State of , having an office and place of business at (hereinafter called the "Assignee"), whose representative is .

WITNESSETH, That:

WHEREAS, heretofore and as of the day of , the Port Authority and the Assignor entered into a lease identified by Port Authority Lease Number (hereinafter, as the same may have been heretofore amended, extended and supplemented, called the "Lease"), covering certain premises at JFK Airport, in the Borough of Queens, City and State of New York, all as more particularly described in the Permit; and

WHEREAS, the Assignor desires to assign the Lease to the Assignee and the Assignee is desirous of acquiring the Lease and becoming the Lessee of the Port Authority thereunder; and

WHEREAS, the Port Authority is willing to consent to such assignment of the Lease from the Assignor to the Assignee on certain terms, provisions, covenants and conditions as hereinafter set forth;

NOW, THEREFORE, for and in consideration of the covenants and mutual agreements herein contained, the Port Authority, the Assignor and the Assignee hereby agree as follows:

1. The Assignor does hereby assign, transfer and set over to the Assignee, and its successors to its and their own proper use, benefit and behoof forever, the Lease, to have and to hold the same unto the Assignee, and its successors, from , for and during all the rest, residue and remainder of the term of the permission under the Lease, subject nevertheless to all the terms, provisions, covenants and conditions therein contained; and the Assignor does hereby assign, transfer and set over unto the Assignee, and its successors, all right, title and interest of the Assignor in and to a certain deposit (whether of cash or bonds) in the amount of Thousand Dollars and No Cents ($ 000,000.00) made by the Assignor with the Port Authority as security for the performance of the terms, provisions, covenants and conditions of the Lease but subject to the provisions of the Lease and to any claim or right to the said deposit or any part thereof heretofore or hereafter made or to be made on the part of the Port Authority.

2. The Port Authority hereby consents to the foregoing assignment. Notwithstanding anything herein to the contrary, the granting of such consent by the Port Authority shall not be, or be deemed to operate as, a waiver of the requirements for consent (or consents) to each and every subsequent assignment by the Assignee or by any subsequent assignee, nor shall the Assignor be relieved of liability under the terms, provisions and conditions of the Lease by reason of this consent of the Port Authority of one or more other consents to one or more other assignments thereof.

3. The Assignor agrees that this assignment of the Lease and this consent of the Port Authority thereto shall not in any way whatsoever affect or impair the liability of the Assignor to perform all the terms, provisions and conditions, including without limitation thereto the obligation to pay fees, of the Lease on the part of the Lessee thereunder to be performed and that the Assignor shall continue fully liable for the performance of all the terms, provisions, covenants and conditions, including without limitation thereto the obligation to pay fees, on the part of the Lessee thereunder to be performed. The liability of the Assignor as set forth in this paragraph shall remain and continue in full force and effect as to any and every renewal, modification or extension of the Lease whether in accordance with the terms of the Lease or by a separate or additional document, and notwithstanding any such renewal, modification or extension, whether or not the Assignor has specifically consented to such renewal, modification or extension. The liability of the Assignor hereunder shall in no way be affected by the failure of the Port Authority to obtain the Assignor's consent to any such renewal, modification or extension notwithstanding that the Port Authority has previously obtained such consent with respect to a prior renewal, modification or extension.

4. The Assignee does hereby assume the performance of and does hereby agree to perform all the terms, provisions and conditions, including without limitation thereto the obligation to pay fees, contained in the Lease to be performed on the part of the Lessee thereunder as though the Assignee were the original signatory to the Lease. The execution of this instrument by the Port Authority does not constitute a representation by it that the Assignor has performed or fulfilled every obligation required by the Lease; as to such matters, the Assignee agrees to rely solely upon the representation of the Assignor.

5. The liability of the Assignor hereunder shall in no way be affected by:

(a) The release or discharge of the Assignee in any creditors', receivership, bankruptcy or other similar proceeding; or

(b) The impairment, limitation or modification of the liability of the Assignee or its estate in bankruptcy, or of any remedy for the enforcement of the Assignee's said liability under the Lease resulting from the operation of any present or future provision of the Bankruptcy Code or any other statute or from the decision of any court having jurisdiction over the Assignee or its estate; or

(c) The rejection or disaffirmance of the Lease in any creditors', receivership, bankruptcy, or other similar proceeding; or

(d) Any disability or any defense of the Assignee.

6. As hereby amended, all the provisions of the Lease shall be and remain in full force and effect.

7. Neither the Commissioners of the Port Authority, nor any of them, nor any officer, agent or employee thereof, shall be charged personally by the Assignor or by the Assignee with any liability or held liable to either of them under any term or provision of this Agreement, or because of its execution, or because of any breach or attempted or alleged breach thereof.

(THE REMAINDER OF THIS PAGE WAS INTENTIONALLY LEFT BLANK)

IN WITNESS WHEREOF, the parties hereto have executed these presents as of the day and year first above written.

ATTEST:

THE PORT AUTHORITY OF NEW YORK AND NEW JERSEY

_____
Secretary

By_____

(Title)_____
(Seal)

ASSIGNOR:

ATTEST:

_____
Secretary

By_____

(Title)_____
(Corporate Seal)

ASSIGNEE:

ATTEST:

_____
Secretary

By_____

(Title)_____
(Corporate Seal)

(Port Authority Acknowledgment)

STATE OF NEW YORK)
)ss.:
COUNTY OF NEW YORK)

On the day of , 20 before me, the undersigned, a Notary Public in and for said state, personally appeared

personally known to me or proved to me on the basis of satisfactory evidence to be the individual whose name is subscribed to the within instrument and acknowledged that he executed the same in his capacity as for the Port Authority of New York and New Jersey, and that by his signature on the instrument, the individual, or the corporation upon behalf of which the individual acted, executed the instrument.

(Signature of Notary Public)

(Assignor Acknowledgment)

STATE OF)
)ss.:
COUNTY OF)

On the day of , 20 before me, the undersigned, a Notary Public in and for said state, personally appeared

personally known to me or proved to me on the basis of satisfactory evidence to be the individual whose name is subscribed to the within instrument and acknowledged that he executed the same in his capacity as President of , and that by his signature on the instrument, the individual, or the corporation upon behalf of which the individual acted, executed the instrument.

(Signature of Notary Public)

(Assignee Acknowledgment)

STATE OF)
)ss.:
COUNTY OF)

On the day of , 20 before me, the undersigned, a Notary Public in and for said state, personally appeared

personally known to me or proved to me on the basis of satisfactory evidence to be the individual whose name is subscribed to the within instrument and acknowledged that he executed the same in his capacity as President of , and that by his signature on the instrument, the individual, or the corporation upon behalf of which the individual acted, executed the instrument.

(Signature of Notary Public)

SCHEDULE E

AFFIRMATIVE ACTION-EQUAL OPPORTUNITY---MINORITY BUSINESS ENTERPRISES ---WOMEN-OWNED BUSINESS ENTERPRISES REQUIREMENTS

Part I. Affirmative Action Guidelines - Equal Employment Opportunity

Without limiting any of the terms and conditions of the Lease between The Port Authority of New York and New Jersey (the "***Port Authority***") and Gaz Realty, Inc. ("*the Lessee")* under Lease No. AYE-048 (the "***Lease***"), the Lessee understands and agrees that it shall put into effect prior to the commencement of any construction work (including but not limited to any work under a Tenant Alteration Application) an affirmative action program and Minority Business Enterprise (MBE) program and Women-owned Business Enterprise (WBE) program in accordance with the provisions of this Schedule E. As used in this Schedule E the term "***construction work***" shall be deemed to include also any and all construction work and/or alteration work under each Tenant Alteration Application. The provisions of this Schedule E shall be applicable to the Lessee's contractor or contractors and subcontractors at any tier of construction as well as to the Lessee itself and the Lessee shall include the provisions of this Schedule E within all of its construction contracts so as to make said provisions and undertakings the direct obligation of the construction contractor or contractors and subcontractors at any tier of construction. The Lessee shall and shall require its said contractor, contractors and subcontractors to furnish to the Port Authority such data, including but not limited to compliance reports relating to the operation and implementation of the affirmative action, Minority Business Enterprise (MBE) and Women-owned Business Enterprise (WBE) programs called for hereunder as the Port Authority may request at any time and from time to time regarding the affirmative action, Minority Business Enterprises (MBE) and Women-owned Business Enterprises (WBE) programs of the Lessee and its contractor, contractors, and subcontractors at any tier of construction, and the Lessee shall and shall also require that its contractor, contractors and subcontractors at any tier of construction make and put into effect such modifications and additions thereto as may be directed by the Port Authority pursuant to the provisions hereof and this Schedule E to effectuate the goals of affirmative action and Minority Business Enterprise (MBE) and Women-owned Business Enterprise (WBE) programs.

In addition to and without limiting any terms and conditions of the Lease, the Lessee shall provide in its contracts and all subcontracts covering the construction work or any portion thereof, that:

(aa) The contractor shall not discriminate against employees and applicants for employment because of race, creed, color, national origin, sex, age, disability or marital status, and shall undertake or continue existing programs of affirmative action to ensure that minority group persons are afforded equal employment opportunity without discrimination. Such programs shall include, but not be limited to, recruitment, employment, job assignment, promotion, upgrading, demotion, transfer, layoff, termination, rates of pay or other forms of

compensation, and selections for training or retraining, including apprenticeships and on-the-job training;

(bb) At the request of either the Port Authority or the Lessee, the contractor shall request such employment agency, labor union, or authorized representative of workers with which it has a collective bargaining or other Letter Agreement or understanding and which is involved in the performance of the contract with the Lessee to furnish a written statement that such employment agency, labor union or representative shall not discriminate because of race, creed, color, national origin, sex, age, disability or marital status and that such union or representative will cooperate in the implementation of the contractor's obligations hereunder;

(cc) The contractor will state, in all solicitations or advertisements for employees placed by or on behalf of the contractor in the performance of the contract, that all qualified applicants will be afforded equal employment opportunity without discrimination because of race, creed, color, national origin, sex, age, disability or marital status;

(dd) The contractor will include the provisions of subparagraphs (aa) through (cc) of this paragraph in every subcontract or purchase order in such a manner that such provisions will be binding upon each subcontractor or vendor as to its work in connection with the contract;

(ee) 'Contractor' as used herein shall include each contractor and subcontractor at any tier of construction.

I. As a matter of policy the Port Authority hereby requires the Lessee and the Lessee shall require the Contractor, as hereinafter defined, to comply with all of the provisions of this Schedule E, the foregoing provisions set forth above and the provisions set forth hereinafter in this Schedule E. The provisions set forth in this Part I are similar to the conditions for bidding on federal government contract adopted by the Office of Federal Contract Compliance and effective May 8, 1978.

The Lessee as well as each bidder, contractor and subcontractor of the Lessee and each subcontractor of a contractor at any tier of construction (herein collectively referred to as "the Contractor") must fully comply with the following conditions set forth herein as to each construction trade to be used on the construction work or any portion thereof (said conditions being herein called "Bid Conditions"). The Lessee hereby commits itself to the goals for minority and female utilization set forth below and all other requirements, terms and conditions of the Bid Conditions. The Lessee shall likewise require the Contractor to commit itself to the said goals for minority and female utilization set forth below and all other requirements, terms and conditions of the Bid Conditions by submitting a properly signed bid.

II. The Lessee and the Contractor shall each appoint an executive of its company to assume the responsibility for the implementation of the requirements, terms and conditions of the following Bid Conditions:

(a) The goals for minority and female participation expressed in percentage terms for the Contractor's aggregate workforce in each trade on all construction work are as follows:

(1)	Minority participation	
	Minority, except laborers	30%
	Minority, laborers	40%
(2)	Female participation	
	Female, except laborers	6.9%
	Female, laborers	6.9%

These goals are applicable to all the Contractor's construction work performed in and for the premises.

The Contractor's specific affirmative action obligations required herein of minority and female employment and training must be substantially uniform throughout the length of the contract, and in each trade, and the Contractor shall make good faith efforts to employ minorities and women evenly on each of its projects. The transfer of minority or female employees or trainees from contractor to contractor or from project to project for the sole purpose of meeting the Contractor's goals shall be a violation of the contract. Compliance with the goals will be measured against the total work hours performed.

(b) The Contractor shall provide written notification to the Lessee and the Lessee shall provide written notification to the Manager of the Office of Business and Job Opportunity of the Port Authority within 10 working days of award of any construction subcontract in excess of $10,000 at any tier for construction work. The notification shall list the name, address and telephone number of the subcontractor; employer identification number; estimated starting and completion dates of the subcontract; and the geographical area in which the subcontract is to be performed.

(c) As used in these specifications:

(1) "Employer identification number" means the Federal Social Security number used on the Employer's Quarterly Federal Tax Return, U.S. Treasury Department Form 941:

(2) "Minority" includes:

(i) Black (all persons having origins in any of the Black African racial groups not of Hispanic origin);

(ii) Hispanic (all persons of Mexican, Puerto Rican, Dominican, Cuban, Central or South American culture or origin, regardless of race);

(iii) Asian and Pacific Islander (all persons having origins in any of the original peoples of the Far East, Southeast Asia, the Indian Subcontinent, or the Pacific Islands); and

(iv) American Indian or Alaskan Native (all persons having origins in any of the original peoples of North America and maintaining identifiable tribal affiliations through membership and participation or community identification).

(d) Whenever the Contractor, or any subcontractor at any tier, subcontracts a portion of the construction work involving any construction trade, it shall physically include in each subcontract in excess of $10,000 those provisions which include the applicable goals for minority and female participation.

(e) The Contractor shall implement the specific affirmative action standards provided in subparagraphs (1) through (16) of Paragraph (h) hereof. The goals set forth above are expressed as percentages of the total hours of employment and training of minority and female utilization the Contractor should reasonably be able to achieve in each construction trade in which it has employees in the premises. The Contractor is expected to make substantially uniform progress toward its goals in each craft during the period specified.

(f) Neither the provisions of any collective bargaining agreement, nor the failure by a union with whom the Contractor has a collective bargaining agreement, to refer either minorities or women shall excuse the Contractor's obligations hereunder.

(g) In order for the nonworking training hours of apprentices and trainees to be counted in meeting the goals, such apprentices and trainees must be employed by the Contractor during the training period, and the Contractor must have made a commitment to employ the apprentices and trainees at the completion of their training subject to the availability of employment opportunities. Trainees must be trained pursuant to training programs approved by the U.S. Department of Labor.

(h) The Contractor shall take specific affirmative actions to ensure equal employment opportunity ("EEO").

The evaluation of the Contractor's compliance with these provisions shall be based upon its good faith efforts to achieve maximum results from its actions. The Contractor shall document these efforts fully, and shall implement affirmative action steps at least as extensive as the following:

(1) Ensure and maintain a working environment free of harassment, intimidation, and coercion at all Sites, and in all facilities at which the Contractor's employees are assigned to work. The Contractor, where possible, will assign two or more women to each Phase of the construction project. The Contractor, shall specifically ensure that all foremen, superintendents, and other supervisory personnel at the premises are aware of and carry out the Contractor's obligation to maintain such a working environment, with specific attention to minority or female individuals working at the premises.

(2) Establish and maintain a current list of minority and female recruitment sources, provide written notification to minority and female recruitment sources and to community organizations when the Contractor or its unions have employment opportunities available, and maintain a record of the organizations' responses.

(3) Maintain a current file of the names, addresses and telephone number of each minority and female off-the-street applicant and minority or female referral from a union, a recruitment source or community organization and of what action was taken with respect to each such individual. If such individual was sent to the union hiring hall for referral and was not referred back to the Contractor by union or, if referred, not employed by the Contractor, this shall be documented in the file with the reason therefor, along with whatever additional actions the Contractor may have taken.

(4) Provide immediate written notification to the Lessee when the union or unions with which the Contractor has a collective bargaining agreement has not referred to the Contractor a minority person or woman sent by the Contractor, or when the Contractor has other information that the union referral process has impeded the Contractor's efforts to meet its obligations.

(5) Develop on-the-job training opportunities and/or participate in training programs for the area which expressly include minorities and women, including upgrading programs and apprenticeship and training programs relevant to the Contractor's employment needs, especially those programs funded or approved by the Department of Labor. The Contractor shall provide notice of these programs to the sources compiled under subparagraph (2) above.

(6) Disseminate the Contractor's EEO Policy by providing notice of the policy to unions and training programs and requesting their cooperation in assisting the Contractor in meeting its EEO obligations; by including it in any policy manual and collective bargaining agreement; by publicizing it in the Contractor's newspaper, annual report, etc.; by specific review of the policy with all management personnel and with all minority and female employees at least once a year; and by posting the Contractor's EEO policy on bulletin boards accessible to all employees at each location where construction work is performed.

(7) Review, at least every six months the Contractor's EEO policy and affirmative action obligations hereunder with all employees having any responsibility for hiring, assignment, layoff, termination or other employment decision including specific review of these items with on-premises supervisory personnel such as Superintendents, General Foremen, etc., prior to the initiation of construction work at the premises. A written record shall be made and maintained identifying the time and place of these meetings, persons attending, subject matter discussed, and disposition of the subject matter.

(8) Disseminate the Contractor's EEO policy externally by including it in any advertising in the news media, specifically including minority and female news media, and

providing written notification to and discussing the Contractor's EEO policy with other Contractors and Subcontractors with whom the Contractor does or anticipates doing business.

(9) Direct its recruitment efforts, both oral and written, to minority, female and community organizations, to schools with minority and female students and to minority and female recruitment and training organizations and to State-certified minority referral agencies serving the Contractor's recruitment area and employment needs. Not later than one month prior to the date for the acceptance of applications for apprenticeship or other training by any recruitment source, the Contractor shall send written notification to organizations such as the above, describing the openings, screening procedures, and tests to be used in the selection process.

(10) Encourage present minority and female employees to recruit other minority persons and women and, where reasonable, provide after school, summer and vacation employment to minority and female youth both on the premises and in areas of a Contractor's workforce.

(11) Tests and other selecting requirements shall comply with 41 CFR Part 60-3.

(12) Conduct, at least every six months, an inventory and evaluation at least of all minority and female personnel for promotional opportunities and encourage these employees to seek or to prepare for, through appropriate training, etc., such opportunities.

(13) Ensure that seniority practices, job classifications, work assignments and other personnel practices, do not have a discriminatory effect by continually monitoring all personnel and employment related activities to ensure that the EEO policy and the Contractor's obligations hereunder are being carried out.

(14) Ensure that all facilities and company activities are nonsegregated except that separate or single-user toilet and necessary changing facilities shall be provided to assure privacy between the sexes.

(15) Document and maintain a record of all solicitations of offers for subcontracts from minority and female construction contractors and suppliers, including circulation of solicitations to minority and female contractor associations and other business associations.

(16) Conduct a review, at least every six months, of all supervisors' adherence to and performance under the Contractors' EEO policies and affirmative action obligations.

(i) Contractors are encouraged to participate in voluntary associations which assist in fulfilling one or more of their affirmative action obligations (subparagraphs (1)-(16) of Paragraph (h) above). The efforts of a contractor association, joint contractor-union, contractor-community, or other similar group of which the Contractor is a member and participant, may be asserted as fulfilling any one or more of its obligations under Paragraph (h)

hereof provided that: the Contractor actively participates in the group, makes good faith efforts to assure that the group has a positive impact on the employment of minorities and women in the industry, ensures that the concrete benefits of the program are reflected in the Contractor's minority and female workforce participation, makes good faith efforts to meet its individual goals and timetables, and can provide access to documentation which demonstrates the effectiveness of actions taken on behalf of the Contractor. The obligation to comply, however, is the Contractor's and failure of such a group to fulfill an obligation shall not be a defense for the Contractor's non-compliance.

(j) A single goal for minorities and a separate single goal for women have been established. The Contractor, however, is required to provide equal opportunity and to take affirmative action for all minority groups, both male and female, and all women, both minority and non-minority. Consequently, the Contractor may be in violation hereof if a particular group is employed in a substantially disparate manner (for example, even though the Contractor has achieved its goals for women generally, the Contractor may be in violation hereof if a specific minority group of women is underutilized).

(k) The Contractor shall not use the goals and timetables or affirmative action standards to discriminate against any person because of race, color, religion, sex or national origin.

(l) The Contractor shall not enter into any subcontract with any person or firm debarred from Government contracts pursuant to Executive Order 11246.

(m) The Contractor shall carry out such sanctions and penalties for violation of this clause including suspension, termination and cancellation of existing subcontracts as may be imposed or ordered by the Lessee. Any Contractor who fails to carry out such sanctions and penalties shall be in violation hereof.

(n) The Contractor, in fulfilling its obligations hereunder shall implement specific affirmative actions steps, at least as extensive as those standards prescribed in paragraph (h) hereof so as to achieve maximum results from its efforts to ensure equal employment opportunity. If the Contractor fails to comply with the requirements of these provisions, the Lessee shall proceed accordingly.

(o) The Contractor shall designate a responsible official to monitor all employment related activity to ensure that the company EEO policy is being carried out, to submit reports relating to the provisions hereof as may be required and to keep records. Records shall at least include for each employee the name, address, telephone numbers, construction trade, union affiliation if any, employee identification number when assigned, social security number, race, sex, status (e.g. mechanical apprentice, trainee, helper, or laborer), dates of changes in status, hours worked per week in the indicated trade, rate of pay, and location at which the work is performed. Records shall be maintained in an easily understandable and retrievable form; however, to the degree that existing records satisfy this requirement, contractors shall not be required to maintain separate records.

(p) Nothing herein provided shall be construed as a limitation upon the application of any laws which establish different standards of compliance or upon the application of requirements for the hiring of local or other area residents (e.g., those under the Public Works Employment Act of 1977 and the Community Development Block Grant Program).

Without limiting any other obligation, term or provision under the Lease, the Contractor shall cooperate with all federal, state or local agencies established for the purpose of implementing affirmative action compliance programs and shall comply with all procedures and guidelines established or which may be established by the Port Authority.

PART II.

MINORITY BUSINESS ENTERPRISES/WOMEN-OWNED BUSINESS ENTERPRISES

As a matter of policy the Port Authority requires the Lessee and the Lessee shall itself and shall require the general contractor or other construction supervisor and each of the Lessee's contractors to use every good faith effort to provide for meaningful participation by Minority Business Enterprises (MBEs) and Women-owned Business Enterprises (WBEs) in the construction work pursuant to the provisions of this Schedule E. For purposes hereof, "Minority Business Enterprise" "(MBE)" shall mean any business enterprise which is at least fifty-one percentum owned by, or in the case of a publicly owned business, at least fifty-one percentum of the stock of which is owned by citizens or permanent resident aliens who are minorities and such ownership is real, substantial and continuing. For the purposes hereof, "Women-owned Business Enterprise" "(WBE)" shall mean any business enterprise which is at least fifty-one percentum owned by, or in the case of a publicly owned business, at least fifty-one percentum of the stock of which is owned by women and such ownership is real, substantial and continuing. A minority shall be as defined in paragraph II(c) of Part I of this Schedule E. "Meaningful participation" shall mean that at least seventeen percent (17%) of the total dollar value of the construction contracts (including subcontracts) covering the construction work are for the participation of Minority Business Enterprises and Women-owned Business Enterprises, of which at least twelve percent (12%) are for the participation of Minority Business Enterprises. Good faith efforts to include meaningful participation by MBEs and WBEs shall include at least the following:

(a) Dividing the work to be subcontracted into smaller portions where feasible.

(b) Actively and affirmatively soliciting bids for subcontracts from MBEs and WBEs, including circulation of solicitations to minority and female contractor associations. The Contractor shall maintain records detailing the efforts made to provide for meaningful MBE and WBE participation in the work, including the names and addresses of all MBEs and WBEs contacted and, if any such MBE or WBE is not selected as a joint venturer or subcontractor, the reason for such decision.

(c) Making plans and specifications for prospective construction work available to MBEs and WBEs in sufficient time for review.

(d) Utilizing the list of eligible MBEs and WBEs maintained by the Port Authority or seeking minorities and women from other sources for the purpose of soliciting bids for subcontractors.

(e) Encouraging the formation of joint ventures, partnerships or other similar arrangements among subcontractors, where appropriate, to insure that the Lessee and Contractor will meet their obligations hereunder.

(f) Insuring that provision is made to provide progress payments to MBEs and WBEs on a timely basis.

(g) Not requiring bonds from and/or providing bonds and insurance for MBEs and WBEs, where appropriate.

Certification of MBEs and WBEs hereunder shall be made by the Office of Business and Job Opportunity of the Port Authority. If the Contractor wishes to utilize a firm not already certified by the Port Authority, it shall submit to the Port Authority a written request for a determination that the proposed firm is eligible for certification. This shall be done by completing and forwarding such form as may be then required by the Port Authority. All such requests shall be in writing addressed to the Office of Business and Job Opportunity, the Port Authority of New York and New Jersey, 225 Park Avenue South, New York, New York 10003 or such other address as the Port Authority may specify by notice to the Lessee. Certification shall be effective only if made in writing by the Director in charge of the Office of Business and Job Opportunity of the Port Authority. The determination of the Port Authority shall be final and binding.

The Port Authority has compiled a list of the firms that the Port Authority has determined satisfy the criteria for MBE and WBE certification. This list may be supplemented and revised from time to time by the Port Authority. Such list shall be made available to the Contractor upon request. The Port Authority makes no representation as to the financial responsibility of such, firms, their technical competence to perform, or any other performance-related qualifications.

Only MBE's and WBE's certified by the Port Authority will count toward the MBE and WBE goals.

Please note that only sixty percent (60%) of expenditures to MBE or WBE suppliers will count towards meeting the MBE and WBE goals. However, expenditures to MBE or WBE manufacturer's (i.e. suppliers that produce goods from raw materials or substantially alter them before resale) are counted dollar for dollar.

For the Port Authority

Initialed:

For the Lessee

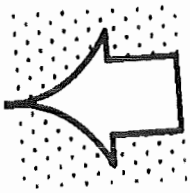

SIGN HERE

SCHEDULE F

LOCAL BUSINESS ENTERPRISES COMMITMENT

As a matter of policy the Port Authority hereby requires the Lessee and the Lessee shall require any Contractor utilized by the Lessee to perform construction work on the Premises to comply with the provisions set forth hereinafter in this Schedule F.

(1) The Lessee and each Contractor shall use every good faith effort to maximize the participation of Local Business Enterprises (LBEs) in all construction work on the Premises, including without limitation the Construction Work. In order to assure familiarity with the services and materials provided by LBEs, the Contractor shall attend such meetings as may be called by the General Manager of the Airport on LBEs and shall contact the Queens Air Services Development Office (ASDO), located at John F. Kennedy International Airport, Bldg. 141, First Floor, Federal Circle, Jamaica, NY 11430 to obtain LBE Vendor Profiles and access ASDO's on-line vendor retrieval system (BASIS). The Port Authority has not checked the references, capabilities or financial background of the LBEs registered with the ASDO, but is referring the Contractor to the ASDO and BASIS solely for the purpose of advising Contractors of LBDs who may be interested in providing services and/or materials to the Contractor.

(2) Good faith efforts to include participation by LBEs in construction work shall include at least the following:

(i) Dividing the work to be subcontracted and services and materials to be procured into small portions, where feasible

(ii) Soliciting bids on portions of the work to be subcontracted and services and materials to be procured from LBE's registered with ASDO and such other LBEs as the Contractor deems appropriate.

(3) The Port Authority is committed to making employment opportunities available to local residents and expects that the Contractor will utilized LBEs.

(4) It is specifically understood and agreed that the requirements set forth herein for the participation of LBEs shall not alter, limit, diminish or modify any of the obligations under this Lease including, without limitation, the obligation to put into effect the affirmative action program and the MBE and WBE programs in accordance with the provisions set forth above in Schedule E hereof.

For the Port Authority

Initialed:

For the Lessee

SIGN HERE

CONTRACT OF GUARANTY

KNOW ALL MEN BY THESE PRESENTS:

WHEREAS, The Port Authority of New York and New Jersey, (hereinafter called "the Port Authority") is willing to enter into the attached Lease Agreement identified by Lease No. AYE-048 (hereinafter called "the Lease") with GAZ REALTY, INC., a corporation organized and existing under and by virtue of the laws of the State of New York with an office and place of business at 366 North Broadway, Suite 206, Jericho, New York 11753 (hereinafter called "the Lessee") upon certain terms and conditions among which is the guaranty of certain of the obligations of the Lessee by the corporation hereinafter described; and

WHEREAS, contemporaneously with the execution of the Lease, the Port Authority, the Lessee (the "Assignor") and JFK AP LLC, a limited liability company organized and existing under the laws of the State of Delaware , having an office and place of business at 366 North Broadway, Suite 206, Jericho, New York 11753 (the Assignee") entered into a Consent to Assignment with Assumption Agreement (the "Consent Agreement") in which the Port Authority consented to the assignment of the Lease from the Assignor to the Assignee on certain terms, provisions, covenants and conditions as set forth therein;

WHEREAS, the GAZ REALTY, INC. (hereinafter called "the Guarantor"), is the absolute and unconditional owner of all of the issued and outstanding shares of the capital stock of the Assignee; and

WHEREAS, in order to induce the Port Authority to enter into the Consent Agreement, the Guarantor has agreed to guarantee the payment of all Rental monetary obligations of the Assignee as defined in Section 4 of the Lease and the performance by the Assignee of all the terms, conditions, covenants and provisions of the Lease with respect to the payment of the Rental on its part to be kept, performed, observed and fulfilled; and

WHEREAS, this Contract of Guaranty is made in connection with and incidental to the exercise by the Guarantor of its corporate rights, powers, privileges and franchises, and in fulfillment of its corporate purposes and objects; and

WHEREAS, the making of the Consent Agreement between the Port Authority, the Lessee/Assignor and the Assignee will inure to the benefit of the Guarantor and enhance its business and improve its situation;

NOW, THEREFORE, in consideration for and as an inducement to the Port Authority to enter into the Consent Agreement with the Assignee, the Guarantor does hereby covenant and agree with the Port Authority as follows:

1. The Guarantor does hereby absolutely and unconditionally guarantee,

promise and agree that the Assignee will duly and punctually pay all of the Rental monetary obligations set forth in Section 4 of the Lease and will fully and faithfully perform, observe and fulfill each and every promise, agreement, condition, term and provision contained in the Lease with respect to the payment of the Rental to be performed, observed and fulfilled by the Assignee.

2. The Guarantor waives and dispenses with any notice of non-payment, non-performance or non-observance, or proof of notice or demand whereby to charge it therefor, and agrees that the validity of this Contract of Guaranty and the obligations of the Guarantor hereunder shall in no-wise be terminated, affected or impaired by reason of any failure of the Port Authority to insist upon strict performance under the Lease, or by the assertion by the Port Authority against the Assignee of any of the rights or remedies reserved to the Port Authority pursuant to the provisions of the Lease or by the withdrawal, discontinuance or settlement of any judicial or other proceedings brought by the Port Authority against the Assignee.

3. The liability of the Guarantor hereunder shall in no way be affected by:

(a) The release or discharge of the Assignee in any creditor's receivership, bankruptcy or other similar proceeding; or

(b) The impairment, limitation or modification of the liability of the Assignee or its estate in bankruptcy, or of any remedy for the enforcement of the Assignee's said liability under the Lease, resulting from the operation of any present or future provision of the Bankruptcy Code or any other statute or from the decision of any court having jurisdiction over the Lessee or its estate; or

(c) The rejection or disaffirmance of the Lease in any creditor's receivership, bankruptcy or other similar proceeding; or

(d) Any disability or any defense of the Assignee.

4. This Contract of Guaranty shall remain and continue in full force and effect as to any and every renewal, modification, extension or collateral assignment of the Lease, so long as any payment of the Rental remains outstanding to the Port Authority and whether in accordance with the terms of the Lease, or by a separate or additional document, and notwithstanding any such renewal, modification, extension or collateral assignment, whether or not the Guarantor has specifically consented to such renewal, modification, extension, or collateral assignment. The liability of the Guarantor hereunder shall in no way be affected, by the failure of the Port Authority to obtain the Guarantor's consent to any such renewal, modification, extension or collateral assignment, notwithstanding that the Port Authority may have previously obtained such consent with respect to a prior renewal, modification, extension, or collateral assignment.

"Collateral assignment", as used in the foregoing paragraph, shall include the Lessee's assignment of the Lease as of the date hereof to Empire National Bank to secure certain indebtedness.

5. Acceptance of this Contract of Guaranty and reliance thereon by the Port Authority shall be evidenced by the execution of the Consent Agreement by the Port Authority without any further act or notice. If, for any reason, any part of the obligations of the Guarantor hereunder shall be held invalid or unenforceable, the balance of such obligations shall nevertheless remain in full force and effect. Failure physically to attach a copy of the Consent Agreement to this Contract of Guaranty shall not void, alter or amend the obligations of the Guarantor hereunder.

IN WITNESS WHEREOF, the Guarantor caused these presents to be executed this 1st day of December 2011

ATTEST

GAZ REALTY, INC.

_____
Secretary

By_____

(Title)_____President
(Corporate Seal)

Corporate Acknowledgment

STATE OF)
) ss.:
COUNTY OF)

On the day of , 2011 before me, personally came
to me known, who, being by me duly sworn, did depose and say that he/she resides at

;that he/she is the of GAZ REALTY, INC, the corporation described in, and which executed the foregoing instrument; that he/she knows the seal of the said corporation; that the seal affixed to the said instrument is such corporate seal; that it was so affixed by order of the Board of Directors of the said corporation; and that he/she signed his/her name thereto by like order.

(notarial seal and stamp)

Certificate of Secretary

I, , Secretary of GAZ REALTY, INC., a corporation of the State of New York, do hereby certify as follows:

1. That GAZ REALTY, INC. is the unconditional and absolute owner of all of the issued and outstanding voting shares of the capital stock of JFK AP LLC, a limited liability company of the State of Delaware.

2. That the following is a full, true and correct copy of a Resolution adopted by unanimous vote of the Board of Directors of Gaz Realty, Inc. present at a meeting of the Board of Directors held on the ___ day of _____, 2011 duly called and held in accordance with law and with the charter and by-laws of Gaz Realty, Inc., at which all members of the Board of Directors were present; and that the said Resolution has not been altered or repealed and is not in full force and effect;

> "RESOLVED, that in order to induce the Port Authority of New York and New Jersey to enter into and execute the foregoing attached Consent Agreement, granting permission to occupy space at John F. Kennedy Airport in connection with the Lessee's multi-service vehicle service station at the Airport, and providing for the payment of Rental by JFK AP LLC, all as more particularly set forth in the Lease, this Corporation shall at all times during the effective period of the said Lease as the same may be extended, supplemented, or amended, guarantee all of the Rental payment obligations of JFK AP LLC, Inc. and the full, punctual and faithful performance of all of the terms, provisions, and conditions to be performed, fulfilled and observed by JFK AP LLC with respect to the payment of the Rental under the said Lease; and be it further
>
> RESOLVED, that in the judgment of the Board of Directors, this action will effectuate the purpose and objectives of this Corporation, and will inure to the benefit of and promote, enhance and develop the business and assets of this Corporation and will generally promote its best interests; and be it further
>
> RESOLVED, that the President or Vice -President of this Corporation be, and each of them hereby is, authorized and directed to make, execute and deliver to the Port Authority on behalf of and in the

name of this Corporation, a written Guaranty, guaranteeing all of the aforesaid obligations of JFK AP LLC, and be it further

RESOLVED, that the officers of this Corporation and each of them are hereby authorized and directed to take such steps, execute such documents and perform such other acts and things on behalf of this Corporation as may be necessary or convenient for the purpose of effecting such Guaranty."

3. That the purpose of this certificate is to induce the Port Authority of New York and New Jersey to enter into a Consent Agreement with JFK AP LLC, INC. covering privileges at John F. Kennedy International Airport, in the City of Queens and State of New York and with the intent that the Port Authority of New York and New Jersey, its Commissioners, officers, agents and representatives shall rely on the truth of the matters contained herein.

IN WITNESS WHEREOF, I have signed my name and affixed the corporate seal hereto, this day of 2011.

_____

Secretary of GAZ REALTY, INC.
(Corporate Seal)

STATE OF NEW YORK)
) ss:
COUNTY OF NEW YORK)

On this 10th day of January, ~~2011~~ 2012, before me, the subscriber, a notary public of New York, personally appeared David Kagan the Assistant Director of The Port Authority of New York and New Jersey, who I am satisfied is the person who has signed the within instrument; and, I having first made known to him the contents thereof, he did acknowledge that he signed, sealed with the corporate seal and delivered the same as such officer aforesaid and that the within instrument is the voluntary act and deed of such corporation, made by virtue of the authority of its Board of Commissioners.

(notarial seal and stamp)

MICHAEL F. SCHMIDT
Notary Public, State of New York
No. 01SC6118149
Qualified in New York County
Commission Expires November 1, 2012

STATE OF New York
) ss.
COUNTY OF New York

On this 10 day of January, 2012, before me, a notary public of New York, personally appeared George Abi Zeid the President of GAZ REALTY, INC., who I am satisfied is the person who has signed the within instrument; and I having first made known to him the contents thereof, he did acknowledge that he signed, sealed with the corporate seal and delivered the same as such officer aforesaid and that the within instrument is the voluntary act and deed of such corporation, made by virtue of the authority of its Board of Directors.

Moira McGinn Wallace
(notarial seal and stamp)

MOIRA MCGINN WALLACE
Notary Public, State of New York
No. 01WA4889637
Qualified in Richmond County
Commission Expires on ~~April 13, 20~~
June 11, 2015

Lease No. AYE-048

AGREEMENT OF LEASE

between

THE PORT AUTHORITY OF NEW YORK AND NEW JERSEY

and

GAZ REALTY, INC.

VOLUME II of II

EXHIBIT M

Killam

Environmental Engineering Unit
Aviation Design Division

John F. Kennedy International Airport
Building 124

Environmental Subsurface Baseline Investigation

March 2000

Corporate Headquarters
27 Bleeker Street
Millburn, NJ 07041-1008
973-379-3400

Other Offices
New Jersey
New York
Pennsylvania
Ohio
West Virginia
Massachusetts
Connecticut
New Hampshire
Florida
Michigan
Alabama

a subsidiary of
The Randers Killam Group Inc.
A Thermo ErraTech Company
www.randerskillam.com

Environmental Engineering Unit
Aviation Design Division

John F. Kennedy International Airport Building 124

Environmental Subsurface Baseline Investigation

Final Report

March 2000

TABLE OF CONTENTS

EXECUTIVE SUMMARY 1

1.0 INTRODUCTION 2

1.1 Site Location and Description 2

1.2 Geological Background 2

1.3 Objective of the Baseline Investigation 3

2.0 FIELD PROCEDURES AND SAMPLING METHODOLOGY 4

2.1 Soil Boring and Monitoring Well Installation 4

2.2 Sampling Methodology 4

2.2.1 Soils 5

2.2.2 Groundwater 5

3.0 INVESTIGATION RESULTS 6

3.1 Site Hydrogeology 6

3.2 Analytical Results 6

3.2.1 Soils 6

3.2.2 Groundwater 8

4.0 SUMMARY 10

TABLE OF CONTENTS (cont'd)

List of Figures

Figure 1 ..... Site Location Map
Figure 2 ..... Soil Boring and Monitoring Well Location Map and Site Plan
Figure 3 ..... Conceptual Groundwater Contour Map

List of Tables

Table 1 ..... Monitoring Well/Bore Hole Installation Data Summary
Table 2 ..... Monitoring Well Gauging Data Summary and Groundwater Table Elevations
Table 3 ..... Soil Boring Testing Results Summary
Table 4 ..... Surface Soil Analytical Data Results
Table 5 ..... Subsurface Soil Analytical Data Results
Table 6 ..... Ground Water Analytical Data Results

List of Appendices

Appendix A ..... Survey Results, Soil Boring Logs, Well Construction Data
Appendix B ..... Well Purging and Field Sampling Results

EXECUTIVE SUMMARY

Killam Associates has conducted a subsurface baseline investigation of Building 124 at John F. Kennedy International Airport (JFKIA) on behalf of the Port Authority of New York and New Jersey (Port Authority). The investigation included drilling soil borings, installing monitoring wells and collecting soil and groundwater samples for laboratory analysis.

A total of 10 soil borings were drilled. Five of the ten borings were completed as permanent monitoring wells. Soil and groundwater samples were collected and analyzed for total petroleum hydrocarbons (TPHC), the constituents of the EPA Priority Pollutants plus 40 list including total xylenes (PP+40), methyl-tertiary-butyl ether (MTBE), and tert-butyl alcohol (TBA).

The complete laboratory reports are included under separate cover.

Laboratory analysis of soils indicate the presence of base neutral fraction, pesticide and metal compounds throughout the surficial soils of the site with slightly higher concentrations of these compounds detected in the samples obtained near the northern site boundary line. Overall, the concentrations of these compounds decreased in the samples analyzed from 4 feet to 10 feet below grade in comparison to the surficial soil samples. Low concentrations of PCBs were detected in four soil samples.

Laboratory analyses of the groundwater indicated the presence of metals, pesticides and petroleum hydrocarbons. Monitoring well MW-2, located on the northern portion of the site, was the only monitoring well to contain low levels of semi-volatile organic compounds. It should be noted that the northern portion of the Building 124 site was the former location of eight gasoline underground storage tanks (USTs) associated with the adjacent site, Building 125.

1.0 INTRODUCTION

This report summarizes the baseline subsurface environmental investigation performed at the Building 124 at JFKIA. The report includes a description of the site and its background, a discussion of field activities and analytical results, and a summary of the investigation's findings.

1.1 Site Location and Description

The site investigated is located in the northern area of JFKIA between 147th and 148th Streets. It is bounded by Building 125 to the north; 148th Street and Building 110 to the east; a parking lot and Building 204 to the south; and 147th Street and Building 89 to the west.

The site is comprised of a single story building and an asphalt parking lot. The single story building is approximately 1,600 square feet in size and constructed with concrete block. The building is located toward the northwestern corner of the property and is surrounded by the asphalt parking lot. The entrance to the site is from 147th Street and grass and landscaped lawn areas are located to the north and south of the entrance way.

The closest residential area is Laurelton, Queens located approximately one-quarter mile to the north. The site location is depicted on Figure 1, the Site Location Map.

1.2 Geological Background

In general, the soils found beneath JFKIA consist of a top layer of fine to medium sand to a depth of approximately seven to ten feet below grade. This brown and gray sand originated from Jamaica Bay and was hydraulically placed prior to the development of the airport in the 1940's. Underlying the fill in most areas is a layer of relatively impermeable organic soils. This layer varies from two to seven feet in thickness and is made up of intermittent layers of organic peat and gray organic silts and clays. This is the original marsh soil, which covered most of JFKIA prior to airport development. Beneath the organic material is a stratum of glacial outwash. In areas where the organic layer exists, a perched water table can be found at approximately six feet below grade. In other areas, the groundwater is eight to ten feet below grade and generally flows south towards Jamaica Bay.

Beneath the building 124 site, the organic peat layer was not encountered. The soil is composed of fine to medium brown and gray sand that contains some gravel, cobbles, trace amount of miscellaneous fill and a trace amount of silt that exist from the surface to at least 16 feet below grade. The groundwater table is located eight to ten feet below grade at the site. The direction of groundwater flow at the site is toward the south.

1.3 Objective of the Baseline Investigation

The baseline investigation establishes existing concentrations of various compounds in the subsurface soils and groundwater and notes any elevated levels of compounds that may be associated with past operations at or near the site. The results of the baseline investigation may be included in future lease negotiations.

2.0 FIELD PROCEDURES AND SAMPLING METHODOLOGY

Soil borings and monitoring wells were installed at the site to collect soil and groundwater samples. All work was performed in accordance with the Port Authority's "Field Standard Operating Procedures Manual" and in conformance with NYSDEC and U.S. EPA requirements. This section describes the procedures for soil borings and well installation and the methods employed during sampling activities.

2.1 Soil Borings and Monitoring Well Installation

A total of 10 soil borings were drilled at the site between December 13 and December 16, 1999. Five of the borings were completed as permanent monitoring wells. The Port Authority identified proposed soil boring locations during a site visit and from utility drawings. The locations of the borings were finalized during field installation after field screening for obstructions and utility clearance. After installation, the soil boring and monitoring well locations were surveyed, by a Port Authority Construction Engineering representative, for elevations and location coordinates.

The boreholes were installed as per ASTM standard protocol using a drill rig equipped with 6-inch inside diameter (I.D.) hollow-stem augers. Before drilling each borehole, all downhole equipment was decontaminated to protect against cross-contamination. Monitoring wells were installed and developed according to Port Authority's guidelines for unconfined, unconsolidated monitoring well installation and development procedures. The wells are constructed of a 2-inch I.D., flush-joint, polyvinyl chloride (PVC) casing with a 0.020-inch machine slotted well screen and were installed so the screens intercept the groundwater table. All wells were finished with a flush-mounted curb box with an 8-inch diameter steel manhole cover set in concrete. All wellheads are equipped with locking caps.

All drilling and monitoring well installations were performed by Craig Drilling. A Port Authority Materials Engineering representative was present during all drilling activities to log soil lithology, note any visible signs of contamination, screen and collect soil samples, ensure that standard drilling and well installation protocols were followed, and complete Boring Logs and Well Installation Reports.

The soil boring and monitoring well locations are shown on Figure 2. Table 1 presents a summary of the soil boring and monitoring well installation data, including survey coordinates. Survey results, drilling logs and well construction data are presented in Appendix A.

2.2 Sampling Methodology

This section describes the field methods used to screen and collect soil samples from the boreholes and collect groundwater samples from the monitoring wells. Sufficient volume of each media was collected for each sample to allow for laboratory analysis of the

constituents on the EPA PP+40 List including total xylenes, MTBE and TBA. These analyses were chosen based on the past use of the site and the surrounding sites. Contamination was previously detected in soil and groundwater samples collected on the northern portion of the Building 124 site during the baseline investigation conducted for site to the north (Building 125). Gasoline USTs associated with Building 125 were removed from this area in 1992.

2.2.1 Soils

Soils from each borehole were sampled at two-foot intervals, from the surface to a depth from 10 feet to 16 feet below grade, using a split-spoon sampler. At each interval, from ground level to the bottom of the boring, the samples were placed in jars and screened for total ionizable vapors using an HNu photoionization detector (PID).

The sample exhibiting the highest PID reading in each borehole and the sample collected in the two foot interval just below the surface were submitted to a laboratory for chemical analysis. If no vapors were detected with a PID meter, the sample was collected in the interval immediately above the groundwater table was submitted for analysis. A total of 20 soil samples, 1 duplicate sample, and 3 field blanks were submitted for analysis. The soil boring reports in Appendix A indicate which soil samples from each borehole were submitted for laboratory analysis.

2.2.2 Groundwater

A Port Authority Materials Engineering representative gauged and sampled the monitoring wells installed at the site. Monitoring well gauging was performed to determine the groundwater table elevation in the five onsite wells. A total of 5 groundwater samples, 1 duplicate sample, 1 field blank and 1 trip blank were submitted for laboratory analysis.

A phase interface probe was used to gauge the depth to groundwater and to detect free product in the wells. The total well depth was also measured. The probe is accurate to within 0.01 feet. The measurements were taken relative to the surveyed top of casing elevation of each well. The probe was decontaminated before gauging each well. Table 2 summarizes the data generated by the well gauging activities, including groundwater table elevations.

After the gauging activity, each well was purged and sampled with dedicated, disposable bailers. Three to four well casing volumes were purged before sampling. After each well volume was removed, pH, temperature, conductivity, and salinity were measured and recorded. These data are included in Appendix B on the monitoring well development data sheets. The data collected from the gauging event was used to generate the groundwater contour map presented on Figure 3.

3.0 INVESTIGATION RESULTS

This section describes the findings of the baseline investigation. Site hydrogeology is discussed and analytical results for soil and groundwater samples are presented.

3.1 Site Hydrogeology

The groundwater at JFKIA is known to flow generally south towards Jamaica Bay. The groundwater table at the site is relatively flat, with an average gradient of approximately 0.001 foot per foot. The groundwater elevation across the site ranges from 4.43 feet to 4.55 feet and local groundwater flow is in a southwestern direction. The groundwater contour map is shown on Figure 3.

3.2 Analytical Results

Soil and groundwater samples collected from the site were analyzed for constituents on the EPA PP+40 List, including total xylenes, MTBE and TBA.

3.2.1 Soils

During field screening of the soil samples with a PID, ionizable organic vapors were only detected in borings BH124-1/MW-1 and BH124-2/MW-2. The PID readings ranged from non-detect to 75.6 ppm. In the borehole BH124-1/MW-1, the organic vapors were detected in the sample collected from 6 feet to 8 feet below grade. In the borehole BH124-2/MW-2, the organic vapors were detected in the soils from 2 feet to 10 feet and the sample was obtained from the highest reading, which was from the 4 feet to 6 feet below grade depth. The PID readings of the soil samples are summarized on Table 3. The soil samples submitted for laboratory analysis are noted on the soil boring logs in Appendix A.

A total of 20 soil samples, 1 duplicate sample and 3 field blanks were collected during the investigation. Two samples were collected from each borehole. The soil sample in the two foot interval below grade and the sample showing the highest PID reading were collected for laboratory analysis. If no PID readings were detected in the soil samples, the sample in the interval above the groundwater table was submitted for analysis.

The volatile organic compound (VOC) methylene chloride was detected in thirteen samples at low concentrations. Concentrations ranged from 0.0016 mg/kg to 0.012 mg/kg. Methylene chloride was also detected in the blank sample indicating that its presence may be due to laboratory contamination. No other VOCs were detected in the samples

The semivolatile organic compounds (SVOCs), primarily polynuclear aromatic hydrocarbons (PAHs), were detected at low levels sporadically across the site. The following compounds were detected:

- acenaphthene detected in 3 samples 0.052 mg/kg to 0.71 mg/kg

• anthracene	detected in 5 samples	0.061 mg/kg to 1.2 mg/kg
• benzo[a]anthracene	detected in 9 samples	0.066 mg/kg to 3.3 mg/kg
• benzo[a]pyrene	detected in 9 samples	0.078 mg/kg to 2.7 mg/kg
• benzo[b]fluoranthene	detected in 9 samples	0.099 mg/kg to 4.3 mg/kg
• benzo[g,h,i]perylene	detected in 8 samples	0.039 mg/kg to 0.69 mg/kg
• benzo[k]fluoranthene	detected in 8 samples	0.043 mg/kg to 1.8 mg/kg
• bis(2-ethylhexyl)phthalate	detected in 9 samples	0.045 mg/kg to 0.4 mg/kg
• carbazole	detected in 3 samples	0.057 mg/kg to 0.53 mg/kg
• chrysene	detected in 9 samples	0.057 mg/kg to 2.7 mg/kg
• dibenzofuran	detected in 2 samples	0.086 mg/kg to 0.26 mg/kg
• fluoranthene	detected in 9 samples	0.077 mg/kg to 5.9mg/kg
• fluorene	detected in 5 samples	0.063 mg/kg to 0.77 mg/kg
• indeno[1,2,3-cd]pyrene	detected in 7 samples	0.039 mg/kg to 0.73 mg/kg
• naphthalene	detected in 4 samples	0.043 mg/kg to 0.24 mg/kg
• 2-methylnaphthalene	detected in 4 samples	0.046 mg/kg to 0.27mg/kg
• phenanthrene	detected in 8 samples	0.081 mg/kg to 3.9 mg/kg
• pyrene	detected in 9 samples	0.12 mg/kg to 4.9 mg/kg
• di-n-butylphthalate	detected in 5 samples	0.043 mg/kg to 0.093 mg/kg
• di-n-octylphthalate	detected in 7 samples	0.041 mg/kg to 0.53 mg/kg.

The following SVOCs were detected in only one soil sample:

• acenaphthylene	detected at	0.38 mg/kg
• dibenzo[a,h]anthracene	detected at	0.043 mg/kg
• 4,6-dinitro-2-methylphenol	detected at	0.088 mg/kg
• 4-nitrophenol	detected at	0.046 mg/kg

One PCB compound Aroclor-1260 was detected in 4 samples ranging in concentration from 0.032 mg/kg to 0.48 mg/kg.

The following pesticides were detected sporadically across the site

• aldrin	detected in 1 sample at	0.0079 mg/kg
• dieldrin	detected in 3 samples	0.0056 mg/kg to 0.027 mg/kg
• endosulfan II	detected in 1 sample at	0.0083 mg/kg
• endrin	detected in 1 sample at	0.0053 mg/kg
• endrin aldehyde	detected in 1 sample at	0.032 mg/kg
• heptachlor	detected in 2 samples	0.0058 mg/kg to 0.0059 mg/kg
• methoxychlor	detected in 1 sample at	0.046 mg/kg
• p,p'-DDD	detected in 8 samples	0.0047 mg/kg to 2.2 mg/kg
• p,p'-DDE	detected in 9 samples	0.006 mg/kg to 0.04 mg/kg
• p,p'-DDT	detected in 7 samples	0.0089 mg/kg to 0.18 mg/kg

The following metals were detected in two or more samples throughout the site at the noted concentrations:

- antimony 2.1 mg/kg – 2.9 mg/kg
- arsenic 2.5 mg/kg – 46 mg/kg
- barium 9.4 mg/kg – 87 mg/kg
- chromium 5.8 mg/kg – 33 mg/kg
- copper 4.6 mg /kg – 200 mg/kg
- lead 2.7 mg/kg – 180 mg/kg
- mercury 0.04 mg/kg – 1.1 mg/kg
- nickel 5.1 mg/kg – 30 mg/kg
- zinc 19 mg/kg – 510 mg/kg

Beryllium was detected in one sample at 0.19 mg/kg and cadmium was also only detected in one sample at 0.65 mg/kg.

Cyanide and phenols were not detected in any soil samples.

Total petroleum hydrocarbons (TPHC) were detected in seventeen of the twenty-one samples collected. The TPHC levels ranged from 42 mg/kg to 23,000 mg/kg.

Tables 4 and 5 summarize the results of the analyses of the soil samples.

3.2.2 Groundwater

The VOC compound methylene chloride was detected in three samples (2 of the wells and the duplicate), but was also detected in the method blank. As such this is possibly a lab induced contaminate. The compound acetone was detected in four samples ranging from 11 ug/l to 17 ug/l. Carbon disulfide was detected in one sample at 24 ug/l and chloroform was detected in two samples at 4.1 ug/l and 5.3 ug/l.

The SVOCs that were more prevalent in the groundwater samples were several of the phthalate compounds. Bis(2-ethylhexyl)phthalate and diethylphthalate were detected in five samples ranging from 1.8 ug/l to 6.3 ug/l and 1.2 ug/l to 7.1 ug/l, respectively. However, both compounds were also detected in the method blank. Di-n-octylphthalate was detected in two samples at 1.5 ug/l and 1.7 ug/l.

Several SVOCs, particularly PAHs, were detected in MW-2. Acenaphthene was detected at 1.4 ug/l, fluorene was detected at 1.5 ug/l, naphthalene was detected at 1.9 ug/l, 2-methylnaphthalene was detected at 3.1 ug/l and phenanthrene was detected at 1.8 ug/l.

The following metals were detected in all of the samples:

- arsenic 11 ug/l – 81 ug/l
- barium 150 ug/l – 720 ug/l
- chromium 70 ug/l – 560 ug/l
- copper 75 ug /l – 590 ug/l
- lead 69 ug/l – 330 ug/l
- mercury 0.34 ug/l – 1.8 ug/l
- nickel 69 ug/l – 500 ug/l
- zinc 160 ug/l – 640 ug/l

Beryllium was detected in one sample at 1.8 ug/l. Cyanide, phenols and PCBs were not detected in any samples.

The pesticide p,p'-DDD was detected in one sample at 0.11 ug/l and p,p'-DDT was detected in two samples at 0.12 ug/l and 0.23 ug/l.

Total petroleum hydrocarbons were detected in all samples ranging in concentration from 1.4 mg/l to 6.6 mg/l.

The results of the laboratory analysis of the groundwater samples are summarized in Table 6.

4.0 SUMMARY

The results of the baseline investigation performed at the Building 124 site shows that the soil and groundwater have been impacted by petroleum related contamination.

Soil contamination was generally detected in the surficial soil samples. The prevalent compounds were SVOCs, primarily from the PAHs. These SVOCs were detected at relatively low concentrations.

Total petroleum hydrocarbons were detected in all soil samples.

The groundwater samples contained concentrations of total petroleum hydrocarbons and one groundwater sample from MW-2 contained several low concentrations of SVOCs related to petroleum. Several VOCs were detected in the groundwater samples, but are not related to petroleum but rather are common laboratory contaminants.

The soil samples overall contained a greater number of compounds and at higher concentrations compared to the groundwater samples.

FIGURES

TABLES

Table 1
John F. Kennedy International Airport
Building 124
Baseline Investigation
Monitoring Well/Bore Hole Installation Data Summary

Well /Bore Hole Identification	Installation Date	Well/Bore Hole Depth	Surface Elevation	Well Casing Elevation	Survey Coordinates	
					South	East
124-MW-1	12/15/99	13.9	14.12	13.85	52064	66066
124-MW-2	12/15/99	13.77	13.30	12.87	52039	66169
124-MW-3	12/13/99	13.48	13.68	13.26	52068	66216
124-MW-4	12/15/99	20.68	14.05	13.82	52183	66128
124-MW-5	12/13/99	20.75	13.67	13.39	52127	66312
BH124-3	12/13/99	10.00	13.55	--	52038	66246
BH124-5	12/16/99	10.00	14.03	--	52142	66103
BH124-6	12/15/99	3.00*	13.85	--	52114	66200
BH124-6A	12/15/99	10.00	13.83	--	52113	66205
BH124-7	12/16/99	10.00	13.65	--	52077	66309
BH124-9	12/16/99	10.00	13.82	--	52154	66227

Notes: 1. All measurements are in feet
* = Bore Hole 6 was stopped due to an obstruction. The Bore Hole was completed as 6A.

Table 2
John F. Kennedy International Airport
Building 124
Baseline Investigation
Monitoring Well Gauging Data Summary and Groundwater Table Elevations

Well Identification	Date Gauged	Depth of Well	Depth to Water	Well Casing Elevation	Groundwater Elevation
124-MW-1	12/22/99	13.9	9.30	13.85	4.55
124-MW-2	12/22/99	13.77	8.33	12.87	4.54
124-MW-3	12/22/99	13.48	8.77	13.26	4.49
124-MW-4	12/22/99	20.68	9.39	13.82	4.43
124-MW-5	12/22/99	20.75	8.90	13.39	4.49

Notes: 1. All measurements are in feet

Table 3
John F. Kennedy International Airport
Building 124
Baseline Investigation
Soil Boring Testing Results Summary

Well /Bore Hole Identification	Hnu Photoionization Readings of Soils					
	0 to 2'	2' to 4'	4' to 6'	6' to 8'	8' to 10'	10' to 12' or >
124-MW-1	0	0	0	3.5	0	0
124-MW-2	0	0.9	75.6	4.1	3.5	1
124-MW-3	0	0	0	0	0	0
124-MW-4	0	0	0	0	0	0
124-MW-5	0	0	0	0	0	0
BH124-3	0	0	0	0	0	--
BH124-5	0	0	0	0	0	--
BH124-6	0	0	0	0	0	--
BH124-6A	0	0	0	0	0	--
BH124-7	0	0	0	0	0	--
BH124-9	0	0	0	0	0	--

Notes: 1. All measurements are based upon headspace screening
2. Results are reported in parts per million (ppm)

Table 4 A
Surface Soil Analytical Data Results
Building 124
JFK International Airport, New York

CAS #	Analyte	Units:	Client Sample ID: BH-124-4/MW-3 S-1	BH-124-4/MW-3 S-1 D	BH-124-3 S-1	BH-124-10/MW-5 S-1
		Veritech Sample ID:	AA99537	AA99538	AA99540	AA99542
		Sampling Date:	12/13/99	12/13/99	12/13/99	12/13/99
		Units:	MG/KG	MG/KG	MG/KG	MG/KG
630-20-6	1,1,1,2-Tetrachloroethane		0.0011 U	0.0011 U	0.0011 U	0.0011 U
71-55-6	1,1,1-Trichloroethane		0.0054 U	0.0054 U	0.0054 U	0.0055 U
79-34-5	1,1,2,2-Tetrachloroethane		0.0054 U	0.0054 U	0.0054 U	0.0055 U
79-00-5	1,1,2-Trichloroethane		0.0054 U	0.0054 U	0.0054 U	0.0055 U
75-34-3	1,1-Dichloroethane		0.0054 U	0.0054 U	0.0054 U	0.0055 U
75-35-4	1,1-Dichloroethene		0.0054 U	0.0054 U	0.0054 U	0.0055 U
95-50-1	1,2-Dichlorobenzene		0.0054 U	0.0054 U	0.0054 U	0.0055 U
107-06-2	1,2-Dichloroethane		0.0054 U	0.0054 U	0.0054 U	0.0055 U
78-87-5	1,2-Dichloropropane		0.0054 U	0.0054 U	0.0054 U	0.0055 U
541-73-1	1,3-Dichlorobenzene		0.0054 U	0.0054 U	0.0054 U	0.0055 U
106-46-7	1,4-Dichlorobenzene		0.0054 U	0.0054 U	0.0054 U	0.0055 U
78-93-3	2-Butanone		0.027 U	0.027 U	0.027 U	0.027 U
110-75-8	2-Chloroethylvinylether		0.0054 U	0.0054 U	0.0054 U	0.0055 U
591-78-6	2-Hexanone		0.022 U	0.022 U	0.022 U	0.022 U
108-10-1	4-Methyl-2-Pentanone		0.022 U	0.022 U	0.022 U	0.022 U
67-64-1	Acetone		0.022 U	0.022 U	0.022 U	0.022 U
107-02-8	Acrolein		0.016 U	0.016 U	0.016 U	0.016 U
107-13-1	Acrylonitrile		0.0075 U	0.0075 U	0.0075 U	0.0076 U
71-43-2	Benzene		0.0011 U	0.0011 U	0.0011 U	0.0011 U
75-27-4	Bromodichloromethane		0.0054 U	0.0054 U	0.0054 U	0.0055 U
75-25-2	Bromoform		0.0054 U	0.0054 U	0.0054 U	0.0055 U
74-83-9	Bromomethane		0.0054 U	0.0054 U	0.0054 U	0.0055 U
75-15-0	Carbon Disulfide		0.0054 U	0.0054 U	0.0054 U	0.0055 U
56-23-5	Carbon Tetrachloride		0.0054 U	0.0054 U	0.0054 U	0.0055 U
108-90-7	Chlorobenzene		0.0054 U	0.0054 U	0.0054 U	0.0055 U
75-00-3	Chloroethane		0.0054 U	0.0054 U	0.0054 U	0.0055 U
67-66-3	Chloroform		0.0054 U	0.0054 U	0.0054 U	0.0055 U
74-87-3	Chloromethane		0.0054 U	0.0054 U	0.0054 U	0.0055 U
156-59-2	cis-1,2-Dichloroethene		0.0054 U	0.0054 U	0.0054 U	0.0055 U
10061-01-5	cis-1,3-Dichloropropene		0.0054 U	0.0054 U	0.0054 U	0.0055 U
108-20-3	di-Isopropyl-ether		0.0054 U	0.0054 U	0.0054 U	0.0055 U
124-48-1	Dibromochloromethane		0.0054 U	0.0054 U	0.0054 U	0.0055 U
100-41-4	Ethylbenzene		0.0011 U	0.0011 U	0.0011 U	0.0011 U
108-38-3	M&P-Xylenes		0.0022 U	0.0022 U	0.0022 U	0.0022 U
1634-04-4	Methyl-t-butyl ether		0.0011 U	0.0011 U	0.0011 U	0.0011 U
75-09-2	Methylene Chloride		0.012 B	0.0016 J	0.005 JB	0.0055 U
95-47-6	O-Xylene		0.0011 U	0.0011 U	0.0011 U	0.0011 U
100-42-5	Styrene		0.0011 U	0.0011 U	0.0011 U	0.0011 U
75-65-0	t-Butyl Alcohol		0.011 U	0.011 U	0.011 U	0.011 U
127-18-4	Tetrachloroethene		0.0054 U	0.0054 U	0.0054 U	0.0055 U
108-88-3	Toluene		0.0011 U	0.0011 U	0.0011 U	0.0011 U
156-60-5	trans-1,2-Dichloroethene		0.0054 U	0.0054 U	0.0054 U	0.0055 U
10061-02-6	trans-1,3-Dichloropropene		0.0054 U	0.0054 U	0.0054 U	0.0055 U
79-01-6	Trichloroethene		0.0054 U	0.0054 U	0.0054 U	0.0055 U
75-69-4	Trichlorofluoromethane		0.0054 U	0.0054 U	0.0054 U	0.0055 U
108-05-4	Vinyl Acetate		0.011 U	0.011 U	0.011 U	0.011 U
75-01-4	Vinyl Chloride		0.0054 U	0.0054 U	0.0054 U	0.0055 U

MG/KG: Milligrams per Kilogram
UG/L: Micrograms per Liter
U: Not detected at the Method Detection Limit (MDL)/Practical Quantitation Level (PQL), value is shown adjacent to U
J: Analyte detected below MDL/PQL and is estimated

Table 4 A
Surface Soil Analytical Data Results
Building 124
JFK International Airport, New York

CAS #	Analyte	Client Sample ID: / Veritech Sample ID: / Sampling Date: / Units:	BH-124-1/MW-1 S-1 / AA99684 / 12/15/99 / MG/KG	BH-124-2/MW-2 S-1 / AA99686 / 12/15/99 / MG/KG	BH-124-8/MW-4 S-1 / AA99688 / 12/15/99 / MG/KG	BH-124-6 S-1 / AA99690 / 12/15/99 / MG/KG
630-20-6	1,1,1,2-Tetrachloroethane		0.0011 U	0.0011 U	0.0011 U	0.0011 U
71-55-6	1,1,1-Trichloroethane		0.0053 U	0.0053 U	0.0053 U	0.0055 U
79-34-5	1,1,2,2-Tetrachloroethane		0.0053 U	0.0053 U	0.0053 U	0.0055 U
79-00-5	1,1,2-Trichloroethane		0.0053 U	0.0053 U	0.0053 U	0.0055 U
75-34-3	1,1-Dichloroethane		0.0053 U	0.0053 U	0.0053 U	0.0055 U
75-35-4	1,1-Dichloroethene		0.0053 U	0.0053 U	0.0053 U	0.0055 U
95-50-1	1,2-Dichlorobenzene		0.0053 U	0.0053 U	0.0053 U	0.0055 U
107-06-2	1,2-Dichloroethane		0.0053 U	0.0053 U	0.0053 U	0.0055 U
78-87-5	1,2-Dichloropropane		0.0053 U	0.0053 U	0.0053 U	0.0055 U
541-73-1	1,3-Dichlorobenzene		0.0053 U	0.0053 U	0.0053 U	0.0055 U
106-46-7	1,4-Dichlorobenzene		0.0053 U	0.0053 U	0.0053 U	0.0055 U
78-93-3	2-Butanone		0.027 U	0.027 U	0.026 U	0.027 U
110-75-8	2-Chloroethylvinylether		0.0053 U	0.0053 U	0.0053 U	0.0055 U
591-78-6	2-Hexanone		0.021 U	0.021 U	0.021 U	0.022 U
108-10-1	4-Methyl-2-Pentanone		0.021 U	0.021 U	0.021 U	0.022 U
67-64-1	Acetone		0.021 U	0.021 U	0.021 U	0.022 U
107-02-8	Acrolein		0.016 U	0.016 U	0.016 U	0.016 U
107-13-1	Acrylonitrile		0.0074 U	0.0074 U	0.0073 U	0.0076 U
71-43-2	Benzene		0.0011 U	0.0011 U	0.0011 U	0.0011 U
75-27-4	Bromodichloromethane		0.0053 U	0.0053 U	0.0053 U	0.0055 U
75-25-2	Bromoform		0.0053 U	0.0053 U	0.0053 U	0.0055 U
74-83-9	Bromomethane		0.0053 U	0.0053 U	0.0053 U	0.0055 U
75-15-0	Carbon Disulfide		0.0053 U	0.0053 U	0.0053 U	0.0055 U
56-23-5	Carbon Tetrachloride		0.0053 U	0.0053 U	0.0053 U	0.0055 U
108-90-7	Chlorobenzene		0.0053 U	0.0053 U	0.0053 U	0.0055 U
75-00-3	Chloroethane		0.0053 U	0.0053 U	0.0053 U	0.0055 U
67-66-3	Chloroform		0.0053 U	0.0053 U	0.0053 U	0.0055 U
74-87-3	Chloromethane		0.0053 U	0.0053 U	0.0053 U	0.0055 U
156-59-2	cis-1,2-Dichloroethene		0.0053 U	0.0053 U	0.0053 U	0.0055 U
10061-01-5	cis-1,3-Dichloropropene		0.0053 U	0.0053 U	0.0053 U	0.0055 U
108-20-3	di-Isopropyl-ether		0.0053 U	0.0053 U	0.0053 U	0.0055 U
124-48-1	Dibromochloromethane		0.0053 U	0.0053 U	0.0053 U	0.0055 U
100-41-4	Ethylbenzene		0.0011 U	0.0011 U	0.0011 U	0.0011 U
108-38-3	M&P-Xylenes		0.0021 U	0.0021 U	0.0021 U	0.0022 U
1634-04-4	Methyl-t-butyl ether		0.0011 U	0.0011 U	0.0011 U	0.0011 U
75-09-2	Methylene Chloride		0.0055	0.0053 U	0.0053 U	0.0096
95-47-6	O-Xylene		0.0011 U	0.0011 U	0.0011 U	0.0011 U
100-42-5	Styrene		0.0011 U	0.0011 U	0.0011 U	0.0011 U
75-65-0	t-Butyl Alcohol		0.011 U	0.011 U	0.011 U	0.011 U
127-18-4	Tetrachloroethene		0.0053 U	0.0053 U	0.0053 U	0.0055 U
108-88-3	Toluene		0.0011 U	0.0011 U	0.0011 U	0.0011 U
156-60-5	trans-1,2-Dichloroethene		0.0053 U	0.0053 U	0.0053 U	0.0055 U
10061-02-6	trans-1,3-Dichloropropene		0.0053 U	0.0053 U	0.0053 U	0.0055 U
79-01-6	Trichloroethene		0.0053 U	0.0053 U	0.0053 U	0.0055 U
75-69-4	Trichlorofluoromethane		0.0053 U	0.0053 U	0.0053 U	0.0055 U
108-05-4	Vinyl Acetate		0.011 U	0.011 U	0.011 U	0.011 U
75-01-4	Vinyl Chloride		0.0053 U	0.0053 U	0.0053 U	0.0055 U

MG/KG: Milligrams per Kilogram
UG/L: Micrograms per Liter
U: Not detected at the Method Detection Limit (MDL)/Practical Quantitation Level (PQL), value is shown adjacent to U
J: Analyte detected below MDL/PQL and is estimated

Table 4 A
Surface Soil Analytical Data Results
Building 124
JFK International Airport, New York

CAS #	Analyte	Client Sample ID:	BH-124-5 S-1	BH-124-7 S-1	BH-124-9 S-1	FB 12/13	FB 12/15	FB 12/16
		Veritech Sample ID:	AA99692	AA99694	AA99696	AA99544	AA99698	AA99699
		Sampling Date:	12/16/99	12/16/99	12/16/99	12/13/99	12/15/99	12/16/99
		Units:	MG/KG	MG/KG	MG/KG	UG/L	UG/L	UG/L
630-20-6	1,1,1,2-Tetrachloroethane		0.001 U	0.0011 U	0.0011 U	1 U	1 U	1 U
71-55-6	1,1,1-Trichloroethane		0.0052 U	0.0053 U	0.0056 U	5 U	5 U	5 U
79-34-5	1,1,2,2-Tetrachloroethane		0.0052 U	0.0053 U	0.0056 U	5 U	5 U	5 U
79-00-5	1,1,2-Trichloroethane		0.0052 U	0.0053 U	0.0056 U	5 U	5 U	5 U
75-34-3	1,1-Dichloroethane		0.0052 U	0.0053 U	0.0056 U	5 U	5 U	5 U
75-35-4	1,1-Dichloroethene		0.0052 U	0.0053 U	0.0056 U	5 U	5 U	5 U
95-50-1	1,2-Dichlorobenzene		0.0052 U	0.0053 U	0.0056 U	5 U	5 U	5 U
107-06-2	1,2-Dichloroethane		0.0052 U	0.0053 U	0.0056 U	5 U	5 U	5 U
78-87-5	1,2-Dichloropropane		0.0052 U	0.0053 U	0.0056 U	5 U	5 U	5 U
541-73-1	1,3-Dichlorobenzene		0.0052 U	0.0053 U	0.0056 U	5 U	5 U	5 U
106-46-7	1,4-Dichlorobenzene		0.0052 U	0.0053 U	0.0056 U	5 U	5 U	5 U
78-93-3	2-Butanone		0.026 U	0.027 U	0.028 U	25 U	25 U	25 U
110-75-8	2-Chloroethylvinylether		0.0052 U	0.0053 U	0.0056 U	5 U	5 U	5 U
591-78-6	2-Hexanone		0.021 U	0.021 U	0.022 U	20 U	20 U	20 U
108-10-1	4-Methyl-2-Pentanone		0.021 U	0.021 U	0.022 U	20 U	20 U	20 U
67-64-1	Acetone		0.021 U	0.021 U	0.022 U	20 U	20 U	20 U
107-02-8	Acrolein		0.016 U	0.016 U	0.017 U	15 U	15 U	15 U
107-13-1	Acrylonitrile		0.0072 U	0.0074 U	0.0077 U	1.8 U	1.8 U	1.8 U
71-43-2	Benzene		0.001 U	0.0011 U	0.0011 U	1 U	1 U	1 U
75-27-4	Bromodichloromethane		0.0052 U	0.0053 U	0.0056 U	5 U	5 U	5 U
75-25-2	Bromoform		0.0052 U	0.0053 U	0.0056 U	5 U	5 U	5 U
74-83-9	Bromomethane		0.0052 U	0.0053 U	0.0056 U	5 U	5 U	5 U
75-15-0	Carbon Disulfide		0.0052 U	0.0053 U	0.0056 U	5 U	5 U	5 U
56-23-5	Carbon Tetrachloride		0.0052 U	0.0053 U	0.0056 U	5 U	5 U	5 U
08-90-7	Chlorobenzene		0.0052 U	0.0053 U	0.0056 U	5 U	5 U	5 U
75-00-3	Chloroethane		0.0052 U	0.0053 U	0.0056 U	5 U	5 U	5 U
67-66-3	Chloroform		0.0052 U	0.0053 U	0.0056 U	5 U	5 U	5 U
74-87-3	Chloromethane		0.0052 U	0.0053 U	0.0056 U	36	5 U	5 U
156-59-2	cis-1,2-Dichloroethene		0.0052 U	0.0053 U	0.0056 U	5 U	5 U	5 U
10061-01-5	cis-1,3-Dichloropropene		0.0052 U	0.0053 U	0.0056 U	5 U	5 U	5 U
108-20-3	di-Isopropyl-ether		0.0052 U	0.0053 U	0.0056 U	5 U	5 U	5 U
124-48-1	Dibromochloromethane		0.0052 U	0.0053 U	0.0056 U	5 U	5 U	5 U
100-41-4	Ethylbenzene		0.001 U	0.0011 U	0.0011 U	1 U	1 U	1 U
108-38-3	M&P-Xylenes		0.0021 U	0.0021 U	0.0022 U	2 U	2 U	2 U
1634-04-4	Methyl-t-butyl ether		0.001 U	0.0011 U	0.0011 U	1 U	1 U	1 U
75-09-2	Methylene Chloride		0.0052 U	0.0053 U	0.0073	1.1 J	5 U	5 U
95-47-6	O-Xylene		0.001 U	0.0011 U	0.0011 U	1 U	1 U	1 U
100-42-5	Styrene		0.001 U	0.0011 U	0.0011 U	1 U	1 U	1 U
75-65-0	t-Butyl Alcohol		0.01 U	0.011 U	0.011 U	10 U	10 U	10 U
127-18-4	Tetrachloroethene		0.0052 U	0.0053 U	0.0056 U	5 U	5 U	5 U
108-88-3	Toluene		0.001 U	0.0011 U	0.0011 U	1 U	1 U	1 U
156-60-5	trans-1,2-Dichloroethene		0.0052 U	0.0053 U	0.0056 U	5 U	5 U	5 U
10061-02-6	trans-1,3-Dichloropropene		0.0052 U	0.0053 U	0.0056 U	5 U	5 U	5 U
79-01-6	Trichloroethene		0.0052 U	0.0053 U	0.0056 U	5 U	5 U	5 U
75-69-4	Trichlorofluoromethane		0.0052 U	0.0053 U	0.0056 U	5 U	5 U	5 U
108-05-4	Vinyl Acetate		0.01 U	0.011 U	0.011 U	10 U	10 U	10 U
75-01-4	Vinyl Chloride		0.0052 U	0.0053 U	0.0056 U	5 U	5 U	5 U

MG/KG: Milligrams per Kilogram
UG/L: Micrograms per Liter
U: Not detected at the Method Detection Limit (MDL)/Practical Quantitation Level (PQL), value is shown adjacent to U
J: Analyte detected below MDL/PQL and is estimated

Table 4 B
Surface Soil Analytical Data Results
Building 124
JFK International Airport, New York

CAS #	Analyte / Client Sample ID: / Veritech Sample ID: / Sampling Date: / Units:	BH-124-4/MW-3 S-1	BH-124-4/MW-3 S-1 D	BH-124-3 S-1	BH-124-10/MW-5 S-1	BH-124-1/MW-1 S-1
	Veritech Sample ID:	AA99537	AA99538	AA99540	AA99542	AA99684
	Sampling Date:	12/13/99	12/13/99	12/13/99	12/13/99	12/15/99
	Units:	MG/KG	MG/KG	MG/KG	MG/KG	MG/KG
120-82-1	1,2,4-Trichlorobenzene	0.18 U	0.18 U	0.18 U	0.18 U	0.18 U
95-50-1	1,2-Dichlorobenzene	0.18 U	0.18 U	0.18 U	0.18 U	0.18 U
122-66-7	1,2-Diphenylhydrazine	0.036 U	0.036 U	0.036 U	0.037 U	0.035 U
541-73-1	1,3-Dichlorobenzene	0.18 U	0.18 U	0.18 U	0.18 U	0.18 U
106-46-7	1,4-Dichlorobenzene	0.18 U	0.18 U	0.18 U	0.18 U	0.18 U
95-95-4	2,4,5-Trichlorophenol	0.18 U	0.18 U	0.18 U	0.18 U	0.18 U
88-06-2	2,4,6-Trichlorophenol	0.18 U	0.18 U	0.18 U	0.18 U	0.18 U
120-83-2	2,4-Dichlorophenol	0.18 U	0.18 U	0.18 U	0.18 U	0.18 U
105-67-9	2,4-Dimethylphenol	0.18 U	0.18 U	0.18 U	0.18 U	0.18 U
51-28-5	2,4-Dinitrophenol	0.36 U	0.36 U	0.36 U	0.37 U	0.35 U
121-14-2	2,4-Dinitrotoluene	0.18 U	0.18 U	0.18 U	0.18 U	0.18 U
606-20-2	2,6-Dinitrotoluene	0.18 U	0.18 U	0.18 U	0.18 U	0.18 U
91-58-7	2-Chloronaphthalene	0.18 U	0.18 U	0.18 U	0.18 U	0.18 U
95-57-8	2-Chlorophenol	0.18 U	0.18 U	0.18 U	0.18 U	0.18 U
91-57-6	2-Methylnaphthalene	0.18 U	0.18 U	0.18 U	0.18 U	0.18 U
95-48-7	2-Methylphenol	0.18 U	0.18 U	0.18 U	0.18 U	0.18 U
88-74-4	2-Nitroaniline	0.18 U	0.18 U	0.18 U	0.18 U	0.18 U
88-75-5	2-Nitrophenol	0.18 U	0.18 U	0.18 U	0.18 U	0.18 U
106-44-5	3&4-Methylphenol	0.18 U	0.18 U	0.18 U	0.18 U	0.18 U
91-94-1	3,3'-Dichlorobenzidine	0.18 U	0.18 U	0.18 U	0.18 U	0.18 U
99-09-2	3-Nitroaniline	0.18 U	0.18 U	0.18 U	0.18 U	0.18 U
121-14-2	4,6-Dinitro-2-methylphenol	0.18 U	0.18 U	0.18 U	0.18 U	0.18 U
101-55-3	4-Bromophenyl-phenylether	0.18 U	0.18 U	0.18 U	0.18 U	0.18 U
59-50-7	4-Chloro-3-methylphenol	0.18 U	0.18 U	0.18 U	0.18 U	0.18 U
106-47-8	4-Chloroaniline	0.18 U	0.18 U	0.18 U	0.18 U	0.18 U
7005-72-3	4-Chlorophenyl-phenylether	0.18 U	0.18 U	0.18 U	0.18 U	0.18 U
100-01-6	4-Nitroaniline	0.18 U	0.18 U	0.18 U	0.18 U	0.18 U
100-02-7	4-Nitrophenol	0.18 U	0.18 U	0.18 U	0.18 U	0.18 U
83-32-9	Acenaphthene	0.18 U	0.18 U	0.052 J	0.18 U	0.18 U
208-96-8	Acenaphthylene	0.18 U	0.18 U	0.36	0.18 U	0.18 U
120-12-7	Anthracene	0.061 J	0.18 U	0.45	0.18 U	0.18 U
92-87-5	Benzidine	0.36 U	0.36 U	0.36 U	0.37 U	0.35 U
56-55-3	Benzo[a]anthracene	0.28	0.13 J	1.9	0.066 J	0.18 U
50-32-8	Benzo[a]pyrene	0.34	0.15 J	1.8	0.079 J	0.18 U
205-99-2	Benzo[b]fluoranthene	0.64	0.3	2.6	0.13 J	0.18 U
191-24-2	Benzo[g,h,i]perylene	0.19	0.08 J	0.52	0.039 J	0.18 U
207-08-9	Benzo[k]fluoranthene	0.28	0.1 J	1.2	0.18 U	0.18 U
65-85-0	Benzoic Acid	0.36 U	0.36 U	0.36 U	0.37 U	0.35 U
100-51-6	Benzyl Alcohol	0.18 U	0.18 U	0.18 U	0.18 U	0.18 U
111-91-1	Bis(2-Chloroethoxy)methane	0.18 U	0.18 U	0.18 U	0.18 U	0.18 U
111-44-4	Bis(2-Chloroethyl)ether	0.18 U	0.18 U	0.18 U	0.18 U	0.18 U
108-60-1	Bis(2-Chloroisopropyl)ether	0.18 U	0.18 U	0.18 U	0.18 U	0.18 U
117-81-7	Bis(2-Ethylhexyl)phthalate	0.13 J	0.1 J	0.13 J	0.14 J	0.18 U
85-68-7	Butylbenzylphthalate	0.18 U	0.18 U	0.18 U	0.18 U	0.18 U
86-74-8	Carbazole	0.18 U	0.18 U	0.14 J	0.18 U	0.18 U
218-01-9	Chrysene	0.28	0.14 J	1.7	0.057 J	0.18 U
84-74-2	Di-n-butylphthalate	0.18 U	0.18 U	0.18 U	0.093 J	0.18 U
117-84-0	Di-n-octylphthalate	0.094 J	0.087 J	0.085 J	0.21	0.18 U
53-70-3	Dibenzo[a,h]anthracene	0.18 U	0.18 U	0.043 J	0.18 U	0.18 U
132-64-9	Dibenzofuran	0.18 U	0.18 U	0.088 J	0.18 U	0.18 U
84-66-2	Diethylphthalate	0.18 U	0.18 U	0.18 U	0.18 U	0.18 U
131-11-3	Dimethylphthalate	0.18 U	0.18 U	0.18 U	0.18 U	0.18 U
206-44-0	Fluoranthene	0.35	0.18 J	2.9	0.077 J	0.18 U
86-73-7	Fluorene	0.18 U	0.18 U	0.2	0.18 U	0.18 U
118-74-1	Hexachlorobenzene	0.18 U	0.18 U	0.18 U	0.18 U	0.18 U
87-68-3	Hexachlorobutadiene	0.18 U	0.18 U	0.18 U	0.18 U	0.18 U
77-47-4	Hexachlorocyclopentadiene	0.54 U	0.54 U	0.54 U	0.55 U	0.53 U
67-72-1	Hexachloroethane	0.18 U	0.18 U	0.18 U	0.18 U	0.18 U
193-39-5	Indeno[1,2,3-cd]pyrene	0.14 J	0.085 J	0.51	0.18 U	0.18 U
78-59-1	Isophorone	0.18 U	0.18 U	0.18 U	0.18 U	0.18 U
621-64-7	N-Nitroso-Di-N-Propylamine	0.18 U	0.18 U	0.18 U	0.18 U	0.18 U
62-75-9	N-Nitrosodimethylamine	0.18 U	0.18 U	0.18 U	0.18 U	0.18 U
86-30-6	N-Nitrosodiphenylamine	0.18 U	0.18 U	0.18 U	0.18 U	0.18 U
91-20-3	Naphthalene	0.18 U	0.18 U	0.071 J	0.18 U	0.18 U
98-95-3	Nitrobenzene	0.18 U	0.18 U	0.18 U	0.18 U	0.18 U
87-86-5	Pentachlorophenol	0.18 U	0.18 U	0.18 U	0.18 U	0.18 U
85-01-8	Phenanthrene	0.14 J	0.088 J	1.6	0.18 U	0.18 U
108-95-2	Phenol	0.18 U	0.18 U	0.18 U	0.18 U	0.18 U
129-00-0	Pyrene	0.39	0.22	3.8	0.12 J	0.18 U
110-86-1	Pyridine	0.54 U	0.54 U	0.54 U	0.55 U	0.53 U

MG/KG: Milligrams per Kilogram
U: Not detected at the Method Detection Limit (MDL)/ Practical Quantitation Level (PQL), value is shown adjacent to U
J: Analyte detected below MDL/PQL and is estimated

Table 4 B
Surface Soil Analytical Data Results
Building 124
JFK International Airport, New York

CAS #	Analyte	Client Sample ID:	BH-124-2/MW-2 S-1	BH-124-8/MW-4 S-1	BH-124-6 S-1	BH-124-5 S-1	BH-124-7 S-1	BH-124-9 S-1
		Veritech Sample ID:	AA99688	AA99688	AA99690	AA99692	AA99694	AA99696
		Sampling Date:	12/15/99	12/15/99	12/15/99	12/16/99	12/16/99	12/16/99
		Units:	MG/KG	MG/KG	MG/KG	MG/KG	MG/KG	MG/KG
120-82-1	1,2,4-Trichlorobenzene		0.18 U	0.18 U	0.18 U	0.17 U	0.18 U	0.19 U
95-50-1	1,2-Dichlorobenzene		0.18 U	0.18 U	0.18 U	0.17 U	0.18 U	0.19 U
122-66-7	1,2-Diphenylhydrazine		0.035 U	0.035 U	0.037 U	0.035 U	0.035 U	0.037 U
541-73-1	1,3-Dichlorobenzene		0.18 U	0.18 U	0.18 U	0.17 U	0.18 U	0.19 U
106-46-7	1,4-Dichlorobenzene		0.18 U	0.18 U	0.18 U	0.17 U	0.18 U	0.19 U
95-95-4	2,4,5-Trichlorophenol		0.18 U	0.18 U	0.18 U	0.17 U	0.18 U	0.19 U
88-06-2	2,4,6-Trichlorophenol		0.18 U	0.18 U	0.18 U	0.17 U	0.18 U	0.19 U
120-83-2	2,4-Dichlorophenol		0.18 U	0.18 U	0.18 U	0.17 U	0.18 U	0.19 U
105-67-9	2,4-Dimethylphenol		0.18 U	0.18 U	0.18 U	0.17 U	0.18 U	0.19 U
51-28-5	2,4-Dinitrophenol		0.35 U	0.35 U	0.37 U	0.35 U	0.35 U	0.37 U
121-14-2	2,4-Dinitrotoluene		0.18 U	0.18 U	0.18 U	0.17 U	0.18 U	0.19 U
606-20-2	2,6-Dinitrotoluene		0.18 U	0.18 U	0.18 U	0.17 U	0.18 U	0.19 U
91-58-7	2-Chloronaphthalene		0.18 U	0.18 U	0.18 U	0.17 U	0.18 U	0.19 U
95-57-8	2-Chlorophenol		0.18 U	0.18 U	0.18 U	0.17 U	0.18 U	0.19 U
91-57-6	2-Methylnaphthalene		0.12 J	0.18 U	0.046 J	0.17 U	0.18 U	0.19 U
95-48-7	2-Methylphenol		0.18 U	0.18 U	0.18 U	0.17 U	0.18 U	0.19 U
88-74-4	2-Nitroaniline		0.18 U	0.18 U	0.18 U	0.17 U	0.18 U	0.19 U
88-75-5	2-Nitrophenol		0.18 U	0.18 U	0.18 U	0.17 U	0.18 U	0.19 U
106-44-5	3&4-Methylphenol		0.18 U	0.18 U	0.18 U	0.17 U	0.18 U	0.19 U
91-94-1	3,3'-Dichlorobenzidine		0.18 U	0.18 U	0.18 U	0.17 U	0.18 U	0.19 U
99-09-2	3-Nitroaniline		0.18 U	0.18 U	0.18 U	0.17 U	0.18 U	0.19 U
121-14-2	4,6-Dinitro-2-methylphenol		0.18 U	0.18 U	0.18 U	0.17 U	0.18 U	0.19 U
101-55-3	4-Bromophenyl-phenylether		0.18 U	0.18 U	0.18 U	0.17 U	0.18 U	0.19 U
59-50-7	4-Chloro-3-methylphenol		0.18 U	0.18 U	0.18 U	0.17 U	0.18 U	0.19 U
106-47-8	4-Chloroaniline		0.18 U	0.18 U	0.18 U	0.17 U	0.18 U	0.19 U
7005-72-3	4-Chlorophenyl-phenylether		0.18 U	0.18 U	0.18 U	0.17 U	0.18 U	0.19 U
100-01-6	4-Nitroaniline		0.18 U	0.18 U	0.18 U	0.17 U	0.18 U	0.19 U
100-02-7	4-Nitrophenol		0.18 U	0.18 U	0.18 U	0.17 U	0.18 U	0.19 U
83-32-9	Acenaphthene		0.71	0.18 U	0.058 J	0.17 U	0.18 U	0.19 U
208-96-8	Acenaphthylene		0.18 U	0.18 U	0.18 U	0.17 U	0.18 U	0.19 U
120-12-7	Anthracene		1.2	0.18 U	0.26	0.17 U	0.18 U	0.19 U
92-87-5	Benzidine		0.35 U	0.35 U	0.37 U	0.35 U	0.35 U	0.37 U
56-55-3	Benzo(a)anthracene		3.3	0.18 U	1.3	0.17 U	0.18 U	0.089 J
50-32-8	Benzo(a)pyrene		2.7	0.18 U	1.2	0.17 U	0.18 U	0.078 J
205-99-2	Benzo(b)fluoranthene		4.3	0.18 U	2	0.17 U	0.18 U	0.099 J
191-24-2	Benzo(g,h,i)perylene		0.69	0.18 U	0.4	0.17 U	0.18 U	0.042 J
207-08-9	Benzo(k)fluoranthene		1.8	0.18 U	0.77	0.17 U	0.18 U	0.043 J
65-85-0	Benzoic Acid		0.35 U	0.35 U	0.37 U	0.35 U	0.35 U	0.37 U
100-51-6	Benzyl Alcohol		0.18 U	0.18 U	0.18 U	0.17 U	0.18 U	0.19 U
111-91-1	Bis(2-Chloroethoxy)methane		0.18 U	0.18 U	0.18 U	0.17 U	0.18 U	0.19 U
111-44-4	Bis(2-Chloroethyl)ether		0.18 U	0.18 U	0.18 U	0.17 U	0.18 U	0.19 U
108-60-1	Bis(2-Chloroisopropyl)ether		0.18 U	0.18 U	0.18 U	0.17 U	0.18 U	0.19 U
117-81-7	Bis(2-Ethylhexyl)phthalate		0.043 J	0.18 U	0.045 J	0.17 U	0.18 U	0.05 J
85-68-7	Butylbenzylphthalate		0.18 U	0.18 U	0.18 U	0.17 U	0.18 U	0.19 U
86-74-8	Carbazole		0.53	0.18 U	0.057 J	0.17 U	0.18 U	0.19 U
218-01-9	Chrysene		2.7	0.18 U	1.1	0.17 U	0.18 U	0.085 J
84-74-2	Di-n-butylphthalate		0.18 U	0.18 U	0.048 J	0.17 U	0.18 U	0.043 J
117-84-0	Di-n-octylphthalate		0.041 J	0.18 U	0.18 U	0.17 U	0.18 U	0.19 U
53-70-3	Dibenzo(a,h)anthracene		0.18 U	0.18 U	0.18 U	0.17 U	0.18 U	0.19 U
132-64-9	Dibenzofuran		0.26	0.18 U	0.18 U	0.17 U	0.18 U	0.19 U
84-66-2	Diethylphthalate		0.036 J	0.18 U	0.18 U	0.17 U	0.18 U	0.046 J
131-11-3	Dimethylphthalate		0.18 U	0.18 U	0.18 U	0.17 U	0.18 U	0.19 U
206-44-0	Fluoranthene		5.9	0.18 U	2.4	0.17 U	0.18 U	0.17 J
86-73-7	Fluorene		0.52	0.18 U	0.063 J	0.17 U	0.18 U	0.19 U
118-74-1	Hexachlorobenzene		0.18 U	0.18 U	0.18 U	0.17 U	0.18 U	0.19 U
87-68-3	Hexachlorobutadiene		0.18 U	0.18 U	0.18 U	0.17 U	0.18 U	0.19 U
77-47-4	Hexachlorocyclopentadiene		0.53 U	0.53 U	0.55 U	0.52 U	0.53 U	0.56 U
67-72-1	Hexachloroethane		0.18 U	0.18 U	0.18 U	0.17 U	0.18 U	0.19 U
193-39-5	Indeno(1,2,3-cd)pyrene		0.73	0.18 U	0.47	0.17 U	0.18 U	0.039 J
78-59-1	Isophorone		0.18 U	0.18 U	0.18 U	0.17 U	0.18 U	0.19 U
621-64-7	N-Nitroso-Di-N-Propylamine		0.18 U	0.18 U	0.18 U	0.17 U	0.18 U	0.19 U
62-75-9	N-Nitrosodimethylamine		0.18 U	0.18 U	0.18 U	0.17 U	0.18 U	0.19 U
86-30-6	N-Nitrosodiphenylamine		0.18 U	0.18 U	0.18 U	0.17 U	0.18 U	0.19 U
91-20-3	Naphthalene		0.24	0.18 U	0.043 J	0.17 U	0.18 U	0.19 U
98-95-3	Nitrobenzene		0.18 U	0.18 U	0.18 U	0.17 U	0.18 U	0.19 U
87-86-5	Pentachlorophenol		0.18 U	0.18 U	0.18 U	0.17 U	0.18 U	0.19 U
85-01-8	Phenanthrene		3.9	0.18 U	0.89	0.17 U	0.18 U	0.081 J
108-95-2	Phenol		0.18 U	0.18 U	0.18 U	0.17 U	0.18 U	0.19 U
129-00-0	Pyrene		4.9	0.18 U	1.8	0.17 U	0.18 U	0.14 J
110-86-1	Pyridine		0.53 U	0.53 U	0.55 U	0.52 U	0.53 U	0.56 U

MG/KG: Milligrams per Kilogram
U: Not detected at the Method Detection Limit (MDL)/ Practical Quantitation Level (PQL), value is shown adjacent to U
J: Analyte detected below MDL/PQL and is estimated

Table 4 C
Surface Soil Analytical Data Results
Building 124
JFK International Airport, New York

	Client Sample ID:	BH-124-4/MW-3 S-1	BH-124-4/MW-3 S-1	BH-124-3 S-1	BH-124-10/MW-5 S-1
	Veritech Sample ID:	AA99537	AA99538	AA99540	AA99542
	Sampling Date:	12/13/99	12/13/99	12/13/99	12/13/99
CAS #	Analyte Units:	MG/KG	MG/KG	MG/KG	MG/KG
12674-11-2	Aroclor-1016	0.018 U	0.018 U	0.018 U	0.018 U
11104-28-2	Aroclor-1221	0.018 U	0.018 U	0.018 U	0.018 U
11141-16-5	Aroclor-1232	0.018 U	0.018 U	0.018 U	0.018 U
53469-21-9	Aroclor-1242	0.018 U	0.018 U	0.018 U	0.018 U
12672-29-6	Aroclor-1248	0.018 U	0.018 U	0.018 U	0.018 U
11097-69-1	Aroclor-1254	0.018 U	0.018 U	0.018 U	0.018 U
11096-82-5	Aroclor-1260	0.018 U	0.018 U	0.032	0.018 U
309-00-2	Aldrin	0.036 U	0.036 U	0.0036 U	0.0037 U
319-84-6	Alpha-BHC	0.036 U	0.036 U	0.0036 U	0.0037 U
319-85-7	Beta-BHC	0.036 U	0.036 U	0.0036 U	0.0037 U
57-74-9	Chlordane	0.072 U	0.072 U	0.0072 U	0.0073 U
319-86-8	Delta-BHC	0.036 U	0.036 U	0.0036 U	0.0037 U
60-57-1	Dieldrin	0.036 U	0.036 U	0.0036 U	0.0037 U
959-98-8	Endosulfan I	0.036 U	0.036 U	0.0036 U	0.0037 U
33213-65-9	Endosulfan II	0.036 U	0.036 U	0.0036 U	0.0037 U
1031-07-8	Endosulfan Sulfate	0.036 U	0.036 U	0.0036 U	0.0037 U
72-20-8	Endrin	0.036 U	0.036 U	0.0053	0.0037 U
7421-93-4	Endrin Aldehyde	0.036 U	0.036 U	0.0036 U	0.0037 U
53494-70-5	Endrin Ketone	0.036 U	0.036 U	0.0036 U	0.0037 U
58-89-9	Gamma-BHC	0.036 U	0.036 U	0.0036 U	0.0037 U
76-44-8	Heptachlor	0.036 U	0.036 U	0.0059	0.0037 U
1024-57-3	Heptachlor Epoxide	0.036 U	0.036 U	0.0036 U	0.0037 U
72-43-5	Methoxychlor	0.036 U	0.036 U	0.046	0.0037 U
72-54-8	P,P'-DDD	0.36	0.34	0.0036 U	0.0047
72-55-9	P,P'-DDE	0.4	0.32	0.012	0.079
50-29-3	P,P'-DDT	0.13	0.12	0.0089	0.011
8001-35-2	Toxaphene	0.36 U	0.36 U	0.036 U	0.037 U

MG/KG: Milligrams per Kilogram
U: Not detected at the Method Detection Limit (MDL)/Practical Quantitation Level (PQL), value is shown adjacent to U
J: Analyte detected below MDL/PQL and is estimated

Table 4 C
Surface Soil Analytical Data Results
Building 124
JFK International Airport, New York

	Client Sample ID:	BH-124-1/MW-1 S-1	BH-124-2/MW-2 S-1	BH-124-8/MW-4 S-1	BH-124-6 S-1
	Veritech Sample ID:	AA99684	AA99686	AA99688	AA99690
	Sampling Date:	12/15/99	12/15/99	12/15/99	12/15/99
CAS #	Analyte Units:	MG/KG	MG/KG	MG/KG	MG/KG
12674-11-2	Aroclor-1016	0.018 U	0.018 U	0.018 U	0.018 U
11104-28-2	Aroclor-1221	0.018 U	0.018 U	0.018 U	0.018 U
11141-16-5	Aroclor-1232	0.018 U	0.018 U	0.018 U	0.018 U
53469-21-9	Aroclor-1242	0.018 U	0.018 U	0.018 U	0.018 U
12672-29-6	Aroclor-1248	0.018 U	0.018 U	0.018 U	0.018 U
11097-69-1	Aroclor-1254	0.018 U	0.018 U	0.018 U	0.018 U
11096-82-5	Aroclor-1260	0.018 U	0.056	0.018 U	0.27
309-00-2	Aldrin	0.0035 U	0.035 U	0.0035 U	0.037 U
319-84-6	Alpha-BHC	0.0035 U	0.035 U	0.0035 U	0.037 U
319-85-7	Beta-BHC	0.0035 U	0.035 U	0.0035 U	0.037 U
57-74-9	Chlordane	0.0071 U	0.071 U	0.007 U	0.073 U
319-86-8	Delta-BHC	0.0035 U	0.035 U	0.0035 U	0.037 U
60-57-1	Dieldrin	0.0035 U	0.035 U	0.0035 U	0.037 U
959-98-8	Endosulfan I	0.0035 U	0.035 U	0.0035 U	0.037 U
33213-65-9	Endosulfan II	0.0035 U	0.035 U	0.0035 U	0.037 U
1031-07-8	Endosulfan Sulfate	0.0035 U	0.035 U	0.0035 U	0.037 U
72-20-8	Endrin	0.0035 U	0.035 U	0.0035 U	0.037 U
7421-93-4	Endrin Aldehyde	0.0035 U	0.035 U	0.0035 U	0.037 U
53494-70-5	Endrin Ketone	0.0035 U	0.035 U	0.0035 U	0.037 U
58-89-9	Gamma-BHC	0.0035 U	0.035 U	0.0035 U	0.037 U
76-44-8	Heptachlor	0.0035 U	0.035 U	0.0035 U	0.037 U
1024-57-3	Heptachlor Epoxide	0.0035 U	0.035 U	0.0035 U	0.037 U
72-43-5	Methoxychlor	0.0035 U	0.035 U	0.0035 U	0.037 U
72-54-8	P,P'-DDD	0.0035 U	0.53	0.0035 U	0.72
72-55-9	P,P'-DDE	0.0035 U	0.17	0.0035 U	0.22
50-29-3	P,P'-DDT	0.0035 U	0.053	0.0035 U	0.18
8001-35-2	Toxaphene	0.035 U	0.35 U	0.035 U	0.37 U

MG/KG: Milligrams per Kilogram
U: Not detected at the Method Detection Limit (MDL)/Practical Quantitation Level (PQL), value is shown adjacent to U
J: Analyte detected below MDL/PQL and is estimated

Table 4 C
Surface Soil Analytical Data Results
Building 124
JFK International Airport, New York

	Client Sample ID:	BH-124-5 S-1	BH-124-7 S-1	BH-124-9 S-1
	Veritech Sample ID:	AA99692	AA99694	AA99696
	Sampling Date:	12/16/99	12/16/99	12/16/99
CAS #	Analyte Units:	MG/KG	MG/KG	MG/KG
12674-11-2	Aroclor-1016	0.017 U	0.018 U	0.019 U
11104-28-2	Aroclor-1221	0.017 U	0.018 U	0.019 U
11141-16-5	Aroclor-1232	0.017 U	0.018 U	0.019 U
53469-21-9	Aroclor-1242	0.017 U	0.018 U	0.019 U
12672-29-6	Aroclor-1248	0.017 U	0.018 U	0.019 U
11097-69-1	Aroclor-1254	0.017 U	0.018 U	0.019 U
11096-82-5	Aroclor-1260	0.017 U	0.018 U	0.019 U
309-00-2	Aldrin	0.0035 U	0.0035 U	0.0037 U
319-84-6	Alpha-BHC	0.0035 U	0.0035 U	0.0037 U
319-85-7	Beta-BHC	0.0035 U	0.0035 U	0.0037 U
57-74-9	Chlordane	0.0069 U	0.0071 U	0.0074 U
319-86-8	Delta-BHC	0.0035 U	0.0035 U	0.0037 U
60-57-1	Dieldrin	0.018	0.027	0.0037 U
959-98-8	Endosulfan I	0.0035 U	0.0035 U	0.0037 U
33213-65-9	Endosulfan II	0.0035 U	0.0035 U	0.0037 U
1031-07-8	Endosulfan Sulfate	0.0035 U	0.0035 U	0.0037 U
72-20-8	Endrin	0.0035 U	0.0035 U	0.0037 U
7421-93-4	Endrin Aldehyde	0.0035 U	0.0035 U	0.0037 U
53494-70-5	Endrin Ketone	0.0035 U	0.0035 U	0.0037 U
58-89-9	Gamma-BHC	0.0035 U	0.0035 U	0.0037 U
76-44-8	Heptachlor	0.0035 U	0.0035 U	0.0037 U
1024-57-3	Heptachlor Epoxide	0.0035 U	0.0035 U	0.0037 U
72-43-5	Methoxychlor	0.0035 U	0.0035 U	0.0037 U
72-54-8	P,P'-DDD	0.014	0.0035 U	0.014
72-55-9	P,P'-DDE	0.019	0.006	0.013
50-29-3	P,P'-DDT	0.0035 U	0.0035 U	0.0037 U
8001-35-2	Toxaphene	0.035 U	0.035 U	0.037 U

MG/KG: Milligrams per Kilogram
U: Not detected at the Method Detection Limit (MDL)/Practical Quantitation Level (PQL), value is shown adjacent to U
J: Analyte detected below MDL/PQL and is estimated

Table 4 D
Surface Soil Analytical Data Results
Building 124
JFK International Airport, New York

CAS #	Analyte	Units:	BH-124-4/MW-3 S-1	BH-124-4/MW-3 S-1 D	BH-124-3 S-1	BH-124-10/MW-5 S-1
		Client Sample ID:	BH-124-4/MW-3 S-1	BH-124-4/MW-3 S-1 D	BH-124-3 S-1	BH-124-10/MW-5 S-1
		Veritech Sample ID:	AA99537	AA99538	AA99540	AA99542
		Sampling Date:	12/13/99	12/13/99	12/13/99	12/13/99
		Units:	MG/KG	MG/KG	MG/KG	MG/KG
7440-36-0	Antimony	ppm	2.1	2.6	1.4 U	1.4 U
7440-38-2	Arsenic	ppm	35	46	4.4	5.5
7440-39-3	Barium	ppm	75	59	70	44
[illegible]40-41-7	Beryllium	ppm	0.19	0.19 U	0.19 U	0.2 U
[illegible]40-43-9	Cadmium	ppm	0.32 U	0.32 U	0.32 U	0.33 U
7440-47-3	Chromium	ppm	33	16	13	13
7440-50-8	Copper	ppm	140	200	25	13
7439-92-1	Lead	ppm	110	65	91	44
7439-97-6	Mercury	ppm	0.056	0.035 U	0.15	0.12
7440-02-0	Nickel	ppm	30	24	11	9.4
7782-49-2	Selenium	ppm	2.9 U	2.9 U	2.9 U	3 U
7440-22-4	Silver	ppm	1.3 U	1.3 U	1.3 U	1.3 U
7440-28-0	Thallium	ppm	1.1 U	1.1 U	1.1 U	1.1 U
7440-66-6	Zinc	ppm	510	300	69	43
57-12-5	Cyanide	ppm	0.27 U	0.27 U	0.27 U	0.27 U
103-95-2	Phenol	ppm	1.3 U	1.3 U	1.3 U	1.4 U
	Total Petroleum Hydrocarbons	ppm	1300	480	720	750
	% Solids	Percent	93	93	93	91

MG/KG: Milligrams per Kilogram
U: Not detected at the Method Detection Limit (MDL)/Practical Quantitation Level (PQL), Value is shown adjacent to U

Table 4 D
Surface Soil Analytical Data Results
Building 124
JFK International Airport, New York

CAS #	Analyte	Units:	Client Sample ID: BH-124-1/MW-1 S-1 Veritech Sample ID: AA99684 Sampling Date: 12/15/99 MG/KG	BH-124-2/MW-2 S-1 AA99686 12/15/99 MG/KG	BH-124-8/MW-4 S-1 AA99688 12/15/99 MG/KG	BH-124-6 S-1 AA99690 12/15/99 MG/KG
7440-36-0	Antimony	ppm	1.4 U	2.2	1.4 U	2.9
7440-38-2	Arsenic	ppm	2 U	5.3	2 U	8.8
7440-39-3	Barium	ppm	10	42	9.4	87
[illegible]40-41-7	Beryllium	ppm	0.19 U	0.19 U	0.19 U	0.2 U
[illegible]40-43-9	Cadmium	ppm	0.32 U	0.32 U	0.32 U	0.65
7440-47-3	Chromium	ppm	5.8	16	6.2	11
7440-50-8	Copper	ppm	4.6	46	6	57
7439-92-1	Lead	ppm	2.2 U	110	2.7	180
7439-97-6	Mercury	ppm	0.034 U	0.034 U	0.034 U	0.04
7440-02-0	Nickel	ppm	5.1	16	6.1	9.4
7782-49-2	Selenium	ppm	2.9 U	2.9 U	2.8 U	3 U
7440-22-4	Silver	ppm	1.3 U	1.3 U	1.3 U	1.3 U
7440-28-0	Thallium	ppm	1.1 U	1.1 U	1.1 U	1.1 U
7440-66-6	Zinc	ppm	19 U	190	19 U	210
57-12-5	Cyanide	ppm	0.27 U	0.27 U	0.26 U	0.27 U
103-95-2	Phenol	ppm	1.3 U	1.3 U	1.3 U	1.4 U
	Total Petroleum Hydrocarbons	ppm	36 U	670	55	180
	% Solids	Percent	94	94	95	91

MG/KG: Milligrams per Kilogram
U: Not detected at the Method Detection Limit (MDL)/Practical Quantitation Level (PQL), Value is shown adjacent to U

Table 4 D
Surface Soil Analytical Data Results
Building 124
JFK International Airport, New York

CAS #	Analyte	Client Sample ID: / Veritech Sample ID: / Sampling Date: / Units:	BH-124-5 S-1 / AA99692 / 12/16/99 / MG/KG	BH-124-7 S-1 / AA99694 / 12/16/99 / MG/KG	BH-124-9 S-1 / AA99696 / 12/16/99 / MG/KG
7440-36-0	Antimony	ppm	1.4 U	1.4 U	1.4 U
7440-38-2	Arsenic	ppm	2 U	2 U	4.2
7440-39-3	Barium	ppm	12	24	56
7440-41-7	Beryllium	ppm	0.19 U	0.19 U	0.2 U
7440-43-9	Cadmium	ppm	0.31 U	0.32 U	0.33 U
7440-47-3	Chromium	ppm	8.6	9.4	19
7440-50-8	Copper	ppm	5.4	10	21
7439-92-1	Lead	ppm	4.7	18	46
7439-97-6	Mercury	ppm	0.034 U	0.071	0.036 U
7440-02-0	Nickel	ppm	5.1	9.8	18
7782-49-2	Selenium	ppm	2.8 U	2.9 U	3 U
7440-22-4	Silver	ppm	1.2 U	1.3 U	1.3 U
7440-28-0	Thallium	ppm	1 U	1.1 U	1.1 U
7440-66-6	Zinc	ppm	19	28	53
57-12-5	Cyanide	ppm	0.26 U	0.27 U	0.28 U
103-95-2	Phenol	ppm	1.3 U	1.3 U	1.4 U
	Total Petroleum Hydrocarbons	ppm	57	92	120
	% Solids	Percent	96	94	90

MG/KG: Milligrams per Kilogram
U: Not detected at the Method Detection Limit (MDL)/Practical Quantitation Level (PQL), Value is shown adjacent to U

Table 5 A
Subsurface Soil Analytical Data Results
Building 124
JFK International Airport, New York

CAS #	Analy	Client Sample ID: / Veritech Sample ID: / Sampling Date: / Units:	BH-124-4/MW-3 S-5 / AA99539 / 12/13/99 / MG/KG	BH-124-3 S-5 / AA99541 / 12/13/99 / MG/KG	BH-124-10/MW-5 S-5 / AA99543 / 12/13/99 / MG/KG	BH-124-1/MW-1 S-4 / AA99685 / 12/15/99 / MG/KG
30-20-6	1,1,1,2-Tetrachloroetha		0.0012 U	0.0011 U	0.0012 U	0.0011 U
71-55-6	1,1,1-Trichloroethane		0.0061 U	0.0054 U	0.0061 U	0.0056 U
79-34-5	1,1,2,2-Tetrachloroetha		0.0061 U	0.0054 U	0.0061 U	0.0056 U
79-00-5	1,1,2-Trichloroethane		0.0061 U	0.0054 U	0.0061 U	0.0056 U
75-34-3	1,1-Dichloroethane		0.0061 U	0.0054 U	0.0061 U	0.0056 U
75-35-4	1,1-Dichloroethene		0.0061 U	0.0054 U	0.0061 U	0.0056 U
95-50-1	1,2-Dichlorobenzene		0.0061 U	0.0054 U	0.0061 U	0.0056 U
07-06-2	1,2-Dichloroethane		0.0061 U	0.0054 U	0.0061 U	0.0056 U
78-87-5	1,2-Dichloropropane		0.0061 U	0.0054 U	0.0061 U	0.0056 U
41-73-1	1,3-Dichlorobenzene		0.0061 U	0.0054 U	0.0061 U	0.0056 U
06-46-7	1,4-Dichlorobenzene		0.0061 U	0.0054 U	0.0061 U	0.0056 U
78-93-3	2-Butanone		0.03 U	0.027 U	0.03 U	0.028 U
10-75-8	2-Chloroethylvinylether		0.0061 U	0.0054 U	0.0061 U	0.0056 U
91-78-6	2-Hexanone		0.024 U	0.022 U	0.024 U	0.022 U
08-10-1	4-Methyl-2-Pentanone		0.024 U	0.022 U	0.024 U	0.022 U
67-64-1	Acetone		0.024 U	0.022 U	0.024 U	0.022 U
07-02-8	Acrolein		0.018 U	0.016 U	0.018 U	0.017 U
07-13-1	Acrylonitrile		0.0085 U	0.0075 U	0.0085 U	0.0078 U
71-43-2	Benzene		0.0012 U	0.0011 U	0.0012 U	0.0011 U
75-27-4	Bromodichloromethane		0.0061 U	0.0054 U	0.0061 U	0.0056 U
75-25-2	Bromoform		0.0061 U	0.0054 U	0.0061 U	0.0056 U
74-83-9	Bromomethane		0.0061 U	0.0054 U	0.0061 U	0.0056 U
75-15-0	Carbon Disulfide		0.0061 U	0.0054 U	0.0061 U	0.0056 U
56-23-5	Carbon Tetrachloride		0.0061 U	0.0054 U	0.0061 U	0.0056 U
08-90-7	Chlorobenzene		0.0061 U	0.0054 U	0.0061 U	0.0056 U
75-00-3	Chloroethane		0.0061 U	0.0054 U	0.0061 U	0.0056 U
67-66-3	Chloroform		0.0061 U	0.0054 U	0.0061 U	0.0056 U
74-87-3	Chloromethane		0.0061 U	0.0054 U	0.0061 U	0.0056 U
56-59-2	cis-1,2-Dichloroethene		0.0061 U	0.0054 U	0.0061 U	0.0056 U
61-01-5	cis-1,3-Dichloropropene		0.0061 U	0.0054 U	0.0061 U	0.0056 U
08-20-3	di-Isopropyl-ether		0.0061 U	0.0054 U	0.0061 U	0.0056 U
24-48-1	Dibromochloromethane		0.0061 U	0.0054 U	0.0061 U	0.0056 U
00-41-4	Ethylbenzene		0.0012 U	0.0011 U	0.0012 U	0.0011 U
08-38-3	M&P-Xylenes		0.0024 U	0.0022 U	0.0024 U	0.0022 U
34-04-4	Methyl-t-butyl ether		0.0012 U	0.0011 U	0.0012 U	0.0011 U
75-09-2	Methylene Chloride		0.0045 J	0.0035 JB	0.0072 B	0.0056 U
95-47-6	O-Xylene		0.0012 U	0.0011 U	0.0012 U	0.0011 U
00-42-5	Styrene		0.0012 U	0.0011 U	0.0012 U	0.0011 U
75-65-0	t-Butyl Alcohol		0.012 U	0.011 U	0.012 U	0.011 U
27-18-4	Tetrachloroethene		0.0061 U	0.0054 U	0.0061 U	0.0056 U
08-88-3	Toluene		0.0012 U	0.0011 U	0.0012 U	0.0011 U
56-60-5	trans-1,2-Dichloroethen		0.0061 U	0.0054 U	0.0061 U	0.0056 U
61-02-6	trans-1,3-Dichloroprope		0.0061 U	0.0054 U	0.0061 U	0.0056 U
79-01-6	Trichloroethene		0.0061 U	0.0054 U	0.0061 U	0.0056 U
75-69-4	Trichlorofluoromethane		0.0061 U	0.0054 U	0.0061 U	0.0056 U
08-05-4	Vinyl Acetate		0.012 U	0.011 U	0.012 U	0.011 U
75-01-4	Vinyl Chloride		0.0061 U	0.0054 U	0.0061 U	0.0056 U

MG/KG: Milligrams per Kilogram
UG/L Micrograms per liter
U Not detected at the Method Detection Limit (MDL)/Practical Quantitation Level (PQL), value is shown adjacenet to U
J Analyte detected below MDL/PQL and is estimated

Table 5 A
Subsurface Soil Analytical Data Results
Building 124
JFK International Airport, New York

	Client Sample ID:	BH-124-2/MW-2 S-3	BH-124-8/MW-4 S-5	BH-124-6 S-5	BH-124-5 S-5	BH-124-7 S-5
	Veritech Sample ID:	AA99687	AA99689	AA99691	AA99693	AA99695
	Sampling Date:	12/15/99	12/15/99	12/15/99	12/16/99	12/16/99
CAS #	Analy Units:	MG/KG	MG/KG	MG/KG	MG/KG	MG/KG
30-20-6	1,1,1,2-Tetrachloroetha	0.14 U	0.0011 U	0.0013 U	0.0011 U	0.0011 U
71-55-6	1,1,1-Trichloroethane	0.72 U	0.0057 U	0.0064 U	0.0057 U	0.0056 U
79-34-5	1,1,2,2-Tetrachloroetha	0.72 U	0.0057 U	0.0064 U	0.0057 U	0.0056 U
79-00-5	1,1,2-Trichloroethane	0.72 U	0.0057 U	0.0064 U	0.0057 U	0.0056 U
75-34-3	1,1-Dichloroethane	0.72 U	0.0057 U	0.0064 U	0.0057 U	0.0056 U
75-35-4	1,1-Dichloroethene	0.72 U	0.0057 U	0.0064 U	0.0057 U	0.0056 U
95-50-1	1,2-Dichlorobenzene	0.72 U	0.0057 U	0.0064 U	0.0057 U	0.0056 U
07-06-2	1,2-Dichloroethane	0.72 U	0.0057 U	0.0064 U	0.0057 U	0.0056 U
78-87-5	1,2-Dichloropropane	0.72 U	0.0057 U	0.0064 U	0.0057 U	0.0056 U
41-73-1	1,3-Dichlorobenzene	0.72 U	0.0057 U	0.0064 U	0.0057 U	0.0056 U
06-46-7	1,4-Dichlorobenzene	0.72 U	0.0057 U	0.0064 U	0.0057 U	0.0056 U
78-93-3	2-Butanone	3.6 U	0.028 U	0.032 U	0.028 U	0.028 U
10-75-8	2-Chloroethylvinylether	0.72 U	0.0057 U	0.0064 U	0.0057 U	0.0056 U
91-78-6	2-Hexanone	2.9 U	0.023 U	0.026 U	0.023 U	0.022 U
08-10-1	4-Methyl-2-Pentanone	2.9 U	0.023 U	0.026 U	0.023 U	0.022 U
67-64-1	Acetone	2.9 U	0.023 U	0.026 U	0.023 U	0.022 U
07-02-8	Acrolein	2.2 U	0.017 U	0.019 U	0.017 U	0.017 U
07-13-1	Acrylonitrile	0.26 U	0.0079 U	0.0089 U	0.0079 U	0.0078 U
71-43-2	Benzene	0.14 U	0.0011 U	0.0013 U	0.0011 U	0.0011 U
75-27-4	Bromodichloromethane	0.72 U	0.0057 U	0.0064 U	0.0057 U	0.0056 U
75-25-2	Bromoform	0.72 U	0.0057 U	0.0064 U	0.0057 U	0.0056 U
74-83-9	Bromomethane	0.72 U	0.0057 U	0.0064 U	0.0057 U	0.0056 U
75-15-0	Carbon Disulfide	0.72 U	0.0057 U	0.0064 U	0.0057 U	0.0056 U
56-23-5	Carbon Tetrachloride	0.72 U	0.0057 U	0.0064 U	0.0057 U	0.0056 U
08-90-7	Chlorobenzene	0.72 U	0.0057 U	0.0064 U	0.0057 U	0.0056 U
75-00-3	Chloroethane	0.72 U	0.0057 U	0.0064 U	0.0057 U	0.0056 U
67-66-3	Chloroform	0.72 U	0.0057 U	0.0064 U	0.0057 U	0.0056 U
74-87-3	Chloromethane	0.72 U	0.0057 U	0.0064 U	0.0057 U	0.0056 U
56-59-2	cis-1,2-Dichloroethene	0.72 U	0.0057 U	0.0064 U	0.0057 U	0.0056 U
61-01-5	cis-1,3-Dichloropropene	0.72 U	0.0057 U	0.0064 U	0.0057 U	0.0056 U
08-20-3	di-Isopropyl-ether	0.72 U	0.0057 U	0.0064 U	0.0057 U	0.0056 U
24-48-1	Dibromochloromethane	0.72 U	0.0057 U	0.0064 U	0.0057 U	0.0056 U
00-41-4	Ethylbenzene	0.14 U	0.0011 U	0.0013 U	0.0011 U	0.0011 U
08-38-3	M&P-Xylenes	0.29 U	0.0023 U	0.0026 U	0.0023 U	0.0022 U
34-04-4	Methyl-t-butyl ether	0.14 U	0.0011 U	0.0013 U	0.0011 U	0.0011 U
75-09-2	Methylene Chloride	0.72 U	0.0057 U	0.0072	0.0096	0.0084
95-47-6	O-Xylene	0.14 U	0.0011 U	0.0013 U	0.0011 U	0.0011 U
00-42-5	Styrene	0.14 U	0.0011 U	0.0013 U	0.0011 U	0.0011 U
75-65-0	t-Butyl Alcohol	1.4 U	0.011 U	0.013 U	0.011 U	0.011 U
27-18-4	Tetrachloroethene	0.72 U	0.0057 U	0.0064 U	0.0057 U	0.0056 U
08-88-3	Toluene	0.14 U	0.0011 U	0.0013 U	0.0011 U	0.0011 U
56-60-5	trans-1,2-Dichloroethen	0.72 U	0.0057 U	0.0064 U	0.0057 U	0.0056 U
61-02-6	trans-1,3-Dichloroprope	0.72 U	0.0057 U	0.0064 U	0.0057 U	0.0056 U
79-01-6	Trichloroethene	0.72 U	0.0057 U	0.0064 U	0.0057 U	0.0056 U
75-69-4	Trichlorofluoromethane	0.72 U	0.0057 U	0.0064 U	0.0057 U	0.0056 U
08-05-4	Vinyl Acetate	1.4 U	0.011 U	0.013 U	0.011 U	0.011 U
75-01-4	Vinyl Chloride	0.72 U	0.0057 U	0.0064 U	0.0057 U	0.0056 U

MG/KG: Milligrams per Kilogram
UG/L: Micrograms per liter
U: Not detected at the Method Detection Limit (MDL)/Practical Quantitation Level (PQL), value is shown adjacenet to U
J: Analyte detected below MDL/PQL and is estimated

Table 5 A
Subsurface Soil Analytical Data Results
Building 124
JFK International Airport, New York

	Client Sample ID:	BH-124-9 S-5	FB 12/13	FB 12/15	FB 12/16
	Veritech Sample ID:	AA99697	AA99544	AA99698	AA99699
	Sampling Date:	12/16/99	12/13/99	12/15/99	12/16/99
CAS #	Analy Units:	MG/KG	UG/L	UG/L	UG/L
30-20-6	1,1,1,2-Tetrachloroetha	0.0012 U	1 U	1 U	1 U
71-55-6	1,1,1-Trichloroethane	0.006 U	5 U	5 U	5 U
79-34-5	1,1,2,2-Tetrachloroetha	0.006 U	5 U	5 U	5 U
79-00-5	1,1,2-Trichloroethane	0.006 U	5 U	5 U	5 U
75-34-3	1,1-Dichloroethane	0.006 U	5 U	5 U	5 U
75-35-4	1,1-Dichloroethene	0.006 U	5 U	5 U	5 U
95-50-1	1,2-Dichlorobenzene	0.006 U	5 U	5 U	5 U
07-06-2	1,2-Dichloroethane	0.006 U	5 U	5 U	5 U
78-87-5	1,2-Dichloropropane	0.006 U	5 U	5 U	5 U
41-73-1	1,3-Dichlorobenzene	0.006 U	5 U	5 U	5 U
06-46-7	1,4-Dichlorobenzene	0.006 U	5 U	5 U	5 U
78-93-3	2-Butanone	0.03 U	25 U	25 U	25 U
10-75-8	2-Chloroethylvinylether	0.006 U	5 U	5 U	5 U
91-78-6	2-Hexanone	0.024 U	20 U	20 U	20 U
08-10-1	4-Methyl-2-Pentanone	0.024 U	20 U	20 U	20 U
67-64-1	Acetone	0.024 U	20 U	20 U	20 U
07-02-8	Acrolein	0.018 U	15 U	15 U	15 U
07-13-1	Acrylonitrile	0.0083 U	1.8 U	1.8 U	1.8 U
71-43-2	Benzene	0.0012 U	1 U	1 U	1 U
75-27-4	Bromodichloromethane	0.006 U	5 U	5 U	5 U
75-25-2	Bromoform	0.006 U	5 U	5 U	5 U
74-83-9	Bromomethane	0.006 U	5 U	5 U	5 U
75-15-0	Carbon Disulfide	0.006 U	5 U	5 U	5 U
56-23-5	Carbon Tetrachloride	0.006 U	5 U	5 U	5 U
08-90-7	Chlorobenzene	0.006 U	5 U	5 U	5 U
75-00-3	Chloroethane	0.006 U	5 U	5 U	5 U
67-66-3	Chloroform	0.006 U	5 U	5 U	5 U
74-87-3	Chloromethane	0.006 U	36	5 U	5 U
56-59-2	cis-1,2-Dichloroethene	0.006 U	5 U	5 U	5 U
61-01-5	cis-1,3-Dichloropropene	0.006 U	5 U	5 U	5 U
08-20-3	di-Isopropyl-ether	0.006 U	5 U	5 U	5 U
24-48-1	Dibromochloromethane	0.006 U	5 U	5 U	5 U
00-41-4	Ethylbenzene	0.0012 U	1 U	1 U	1 U
08-38-3	M&P-Xylenes	0.0024 U	2 U	2 U	2 U
34-04-4	Methyl-t-butyl ether	0.0012 U	1 U	1 U	1 U
75-09-2	Methylene Chloride	0.0083	1.1 J	5 U	5 U
95-47-6	O-Xylene	0.0012 U	1 U	1 U	1 U
00-42-5	Styrene	0.0012 U	1 U	1 U	1 U
75-65-0	t-Butyl Alcohol	0.012 U	10 U	10 U	10 U
27-18-4	Tetrachloroethene	0.006 U	5 U	5 U	5 U
08-88-3	Toluene	0.0012 U	1 U	1 U	1 U
56-60-5	trans-1,2-Dichloroethen	0.006 U	5 U	5 U	5 U
61-02-6	trans-1,3-Dichloroprope	0.006 U	5 U	5 U	5 U
79-01-6	Trichloroethene	0.006 U	5 U	5 U	5 U
75-69-4	Trichlorofluoromethane	0.006 U	5 U	5 U	5 U
08-05-4	Vinyl Acetate	0.012 U	10 U	10 U	10 U
75-01-4	Vinyl Chloride	0.006 U	5 U	5 U	5 U

MG/KG: Milligrams per Kilogram
UG/L: Micrograms per liter
U: Not detected at the Method Detection Limit (MDL)/Practical Quantitation Level (PQL), value is shown adjacenet to U
J: Analyte detected below MDL/PQL and is estimated

Table 5 B
Subsurface Soil Analytical Data Results
Building 124
JFK International Airport, New York

CAS #	Analyte	Client Sample ID:	BH-124-4/MW-3 S-5	BH-124-3 S-5	BH-124-10/MW-5 S-5	BH-124-1/MW-1 S-4	BH-124-2/MW-2 S-3
		Veritech Sample ID:	AA99539	AA99541	AA99543	AA99685	AA99687
		Sampling Date:	12/13/99	12/13/99	12/13/99	12/15/99	12/15/99
		Units:	MG/KG	MG/KG	MG/KG	MG/KG	MG/KG
120-82-1	1,2,4-Trichlorobenzene		0.2 U	0.18 U	0.2 U	0.19 U	0.19 U
95-50-1	1,2-Dichlorobenzene		0.2 U	0.18 U	0.2 U	0.19 U	0.19 U
122-66-7	1,2-Diphenylhydrazine		0.041 U	0.036 U	0.041 U	0.037 U	0.038 U
541-73-1	1,3-Dichlorobenzene		0.2 U	0.18 U	0.2 U	0.19 U	0.19 U
106-46-7	1,4-Dichlorobenzene		0.2 U	0.18 U	0.2 U	0.19 U	0.19 U
95-95-4	2,4,5-Trichlorophenol		0.2 U	0.18 U	0.2 U	0.19 U	0.19 U
88-06-2	2,4,6-Trichlorophenol		0.2 U	0.18 U	0.2 U	0.19 U	0.19 U
120-83-2	2,4-Dichlorophenol		0.2 U	0.18 U	0.2 U	0.19 U	0.19 U
105-67-9	2,4-Dimethylphenol		0.2 U	0.18 U	0.2 U	0.19 U	0.19 U
51-28-5	2,4-Dinitrophenol		0.41 U	0.36 U	0.41 U	0.37 U	0.38 U
121-14-2	2,4-Dinitrotoluene		0.2 U	0.18 U	0.2 U	0.19 U	0.19 U
606-20-2	2,6-Dinitrotoluene		0.2 U	0.18 U	0.2 U	0.19 U	0.19 U
91-58-7	2-Chloronaphthalene		0.2 U	0.18 U	0.2 U	0.19 U	0.19 U
95-57-8	2-Chlorophenol		0.2 U	0.18 U	0.2 U	0.19 U	0.19 U
91-57-6	2-Methylnaphthalene		0.2 U	0.18 U	0.2 U	0.14 J	0.27
95-48-7	2-Methylphenol		0.2 U	0.18 U	0.2 U	0.19 U	0.19 U
88-74-4	2-Nitroaniline		0.2 U	0.18 U	0.2 U	0.19 U	0.19 U
88-75-5	2-Nitrophenol		0.2 U	0.18 U	0.2 U	0.19 U	0.19 U
106-44-5	3&4-Methylphenol		0.2 U	0.18 U	0.2 U	0.19 U	0.19 U
91-94-1	3,3'-Dichlorobenzidine		0.2 U	0.18 U	0.2 U	0.19 U	0.19 U
99-09-2	3-Nitroaniline		0.2 U	0.18 U	0.2 U	0.19 U	0.19 U
121-14-2	4,6-Dinitro-2-methylphenol		0.2 U	0.18 U	0.2 U	0.19 U	0.088 J
101-55-3	4-Bromophenyl-phenylether		0.2 U	0.18 U	0.2 U	0.19 U	0.19 U
59-50-7	4-Chloro-3-methylphenol		0.2 U	0.18 U	0.2 U	0.19 U	0.19 U
106-47-8	4-Chloroaniline		0.2 U	0.18 U	0.2 U	0.19 U	0.19 U
7005-72-3	4-Chlorophenyl-phenylether		0.2 U	0.18 U	0.2 U	0.19 U	0.19 U
100-01-6	4-Nitroaniline		0.2 U	0.18 U	0.2 U	0.19 U	0.19 U
100-02-7	4-Nitrophenol		0.2 U	0.18 U	0.048 J	0.19 U	0.19 U
83-32-9	Acenaphthene		0.2 U	0.18 U	0.2 U	0.19 U	0.19 U
208-96-8	Acenaphthylene		0.2 U	0.18 U	0.2 U	0.19 U	0.19 U
120-12-7	Anthracene		0.2 U	0.18 U	0.2 U	0.19 U	0.17 J
92-87-5	Benzidine		0.41 U	0.36 U	0.41 U	0.37 U	0.38 U
56-55-3	Benzo[a]anthracene		0.2 U	0.18 U	0.2 U	0.12 J	0.33
50-32-8	Benzo[a]pyrene		0.2 U	0.18 U	0.2 U	0.097 J	0.25
205-99-2	Benzo[b]fluoranthene		0.2 U	0.18 U	0.2 U	0.15 J	0.63
191-24-2	Benzo[g,h,i]perylene		0.2 U	0.18 U	0.2 U	0.19 U	0.1 J
207-08-9	Benzo[k]fluoranthene		0.2 U	0.18 U	0.2 U	0.12 J	0.23
65-85-0	Benzoic Acid		0.41 U	0.36 U	0.41 U	0.37 U	0.38 U
100-51-6	Benzyl Alcohol		0.2 U	0.18 U	0.2 U	0.19 U	0.19 U
111-91-1	Bis(2-Chloroethoxy)methane		0.2 U	0.18 U	0.2 U	0.19 U	0.19 U
111-44-4	Bis(2-Chloroethyl)ether		0.2 U	0.18 U	0.2 U	0.19 U	0.19 U
108-60-1	Bis(2-Chloroisopropyl)ether		0.2 U	0.18 U	0.2 U	0.19 U	0.19 U
117-81-7	Bis(2-Ethylhexyl)phthalate		0.2 U	0.18 U	0.2 U	0.4	0.14 J
85-68-7	Butylbenzylphthalate		0.2 U	0.18 U	0.2 U	0.19 U	0.19 U
86-74-8	Carbazole		0.2 U	0.18 U	0.2 U	0.19 U	0.19 U
218-01-9	Chrysene		0.2 U	0.18 U	0.2 U	0.14 J	0.48
84-74-2	Di-n-butylphthalate		0.2 U	0.18 U	0.2 U	0.078 J	0.19 U
117-84-0	Di-n-octylphthalate		0.2 U	0.18 U	0.2 U	0.53	0.053 J
53-70-3	Dibenzo[a,h]anthracene		0.2 U	0.18 U	0.2 U	0.19 U	0.19 U
132-64-9	Dibenzofuran		0.2 U	0.18 U	0.2 U	0.19 U	0.19 U
84-66-2	Diethylphthalate		0.2 U	0.18 U	0.2 U	0.046 J	0.19 U
131-11-3	Dimethylphthalate		0.2 U	0.18 U	0.2 U	0.19 U	0.19 U
206-44-0	Fluoranthene		0.2 U	0.18 U	0.2 U	0.17 J	1.3
86-73-7	Fluorene		0.2 U	0.18 U	0.2 U	0.072 J	0.77
118-74-1	Hexachlorobenzene		0.2 U	0.18 U	0.2 U	0.19 U	0.19 U
87-68-3	Hexachlorobutadiene		0.2 U	0.18 U	0.2 U	0.19 U	0.19 U
77-47-4	Hexachlorocyclopentadiene		0.61 U	0.54 U	0.61 U	0.56 U	0.57 U
67-72-1	Hexachloroethane		0.2 U	0.18 U	0.2 U	0.19 U	0.19 U
193-39-5	Indeno[1,2,3-cd]pyrene		0.2 U	0.18 U	0.2 U	0.19 U	0.12 J
78-59-1	Isophorone		0.2 U	0.18 U	0.2 U	0.19 U	0.19 U
621-64-7	N-Nitroso-Di-N-Propylamine		0.2 U	0.18 U	0.2 U	0.19 U	0.19 U
62-75-9	N-Nitrosodimethylamine		0.2 U	0.18 U	0.2 U	0.19 U	0.19 U
86-30-6	N-Nitrosodiphenylamine		0.2 U	0.18 U	0.2 U	0.19 U	0.19 U
91-20-3	Naphthalene		0.2 U	0.18 U	0.2 U	0.08 J	0.19 U
98-95-3	Nitrobenzene		0.2 U	0.18 U	0.2 U	0.19 U	0.19 U
87-86-5	Pentachlorophenol		0.2 U	0.18 U	0.2 U	0.19 U	0.19 U
85-01-8	Phenanthrene		0.2 U	0.18 U	0.2 U	0.14 J	1.9
108-95-2	Phenol		0.2 U	0.18 U	0.2 U	0.19 U	0.19 U
129-00-0	Pyrene		0.2 U	0.18 U	0.2 U	0.4	0.98
110-86-1	Pyridine		0.61 U	0.54 U	0.61 U	0.56 U	0.57 U

MG/KG Milligrams per Kilogram.
U: Not detected at the Method Detection Limit (MDL)/Practical Quantitation Level (PQL), value is shown adjacent to U
J Analyte detected below PQL and is estimated

Table 5 B
Subsurface Soil Analytical Data Results
Building 124
JFK International Airport, New York

CAS #	Analyte	Client Sample ID:	BH-124-8/MW-4 S-5	BH-124-6 S-5	BH-124-5 S-5	BH-124-7 S-5	BH-124-9 S-5
		Veritech Sample ID:	AA99689	AA99691	AA99693	AA99695	AA99697
		Sampling Date:	12/15/99	12/15/99	12/16/99	12/16/99	12/16/99
		Units:	MG/KG	MG/KG	MG/KG	MG/KG	MG/KG
120-82-1	1,2,4-Trichlorobenzene		0.19 U	0.21 U	0.19 U	0.19 U	0.2 U
95-50-1	1,2-Dichlorobenzene		0.19 U	0.21 U	0.19 U	0.19 U	0.2 U
122-66-7	1,2-Diphenylhydrazine		0.038 U	0.043 U	0.038 U	0.037 U	0.04 U
541-73-1	1,3-Dichlorobenzene		0.19 U	0.21 U	0.19 U	0.19 U	0.2 U
106-46-7	1,4-Dichlorobenzene		0.19 U	0.21 U	0.19 U	0.19 U	0.2 U
95-95-4	2,4,5-Trichlorophenol		0.19 U	0.21 U	0.19 U	0.19 U	0.2 U
88-06-2	2,4,6-Trichlorophenol		0.19 U	0.21 U	0.19 U	0.19 U	0.2 U
120-83-2	2,4-Dichlorophenol		0.19 U	0.21 U	0.19 U	0.19 U	0.2 U
105-67-9	2,4-Dimethylphenol		0.19 U	0.21 U	0.19 U	0.19 U	0.2 U
51-28-5	2,4-Dinitrophenol		0.38 U	0.43 U	0.38 U	0.37 U	0.4 U
121-14-2	2,4-Dinitrotoluene		0.19 U	0.21 U	0.19 U	0.19 U	0.2 U
606-20-2	2,6-Dinitrotoluene		0.19 U	0.21 U	0.19 U	0.19 U	0.2 U
91-58-7	2-Chloronaphthalene		0.19 U	0.21 U	0.19 U	0.19 U	0.2 U
95-57-8	2-Chlorophenol		0.19 U	0.21 U	0.19 U	0.19 U	0.2 U
91-57-6	2-Methylnaphthalene		0.19 U	0.21 U	0.19 U	0.19 U	0.2 U
95-48-7	2-Methylphenol		0.19 U	0.21 U	0.19 U	0.19 U	0.2 U
88-74-4	2-Nitroaniline		0.19 U	0.21 U	0.19 U	0.19 U	0.2 U
88-75-5	2-Nitrophenol		0.19 U	0.21 U	0.19 U	0.19 U	0.2 U
106-44-5	3&4-Methylphenol		0.19 U	0.21 U	0.19 U	0.19 U	0.2 U
91-94-1	3,3'-Dichlorobenzidine		0.19 U	0.21 U	0.19 U	0.19 U	0.2 U
99-09-2	3-Nitroaniline		0.19 U	0.21 U	0.19 U	0.19 U	0.2 U
121-14-2	4,6-Dinitro-2-methylphenol		0.19 U	0.21 U	0.19 U	0.19 U	0.2 U
101-55-3	4-Bromophenyl-phenylether		0.19 U	0.21 U	0.19 U	0.19 U	0.2 U
59-50-7	4-Chloro-3-methylphenol		0.19 U	0.21 U	0.19 U	0.19 U	0.2 U
106-47-8	4-Chloroaniline		0.19 U	0.21 U	0.19 U	0.19 U	0.2 U
7005-72-3	4-Chlorophenyl-phenylether		0.19 U	0.21 U	0.19 U	0.19 U	0.2 U
100-01-6	4-Nitroaniline		0.19 U	0.21 U	0.19 U	0.19 U	0.2 U
100-02-7	4-Nitrophenol		0.19 U	0.21 U	0.19 U	0.19 U	0.2 U
83-32-9	Acenaphthene		0.19 U	0.21 U	0.19 U	0.19 U	0.2 U
208-96-8	Acenaphthylene		0.19 U	0.21 U	0.19 U	0.19 U	0.2 U
120-12-7	Anthracene		0.19 U	0.21 U	0.19 U	0.19 U	0.2 U
92-87-5	Benzidine		0.38 U	0.43 U	0.38 U	0.37 U	0.4 U
56-55-3	Benzo[a]anthracene		0.19 U	0.21 U	0.19 U	0.19 U	0.2 U
50-32-8	Benzo[a]pyrene		0.19 U	0.21 U	0.19 U	0.19 U	0.2 U
205-99-2	Benzo[b]fluoranthene		0.19 U	0.21 U	0.19 U	0.19 U	0.2 U
191-24-2	Benzo[g,h,i]perylene		0.19 U	0.21 U	0.19 U	0.19 U	0.2 U
207-08-9	Benzo[k]fluoranthene		0.19 U	0.21 U	0.19 U	0.19 U	0.2 U
65-85-0	Benzoic Acid		0.38 U	0.43 U	0.38 U	0.37 U	0.4 U
100-51-6	Benzyl Alcohol		0.19 U	0.21 U	0.19 U	0.19 U	0.2 U
111-91-1	Bis(2-Chloroethoxy)methane		0.19 U	0.21 U	0.19 U	0.19 U	0.2 U
111-44-4	Bis(2-Chloroethyl)ether		0.19 U	0.21 U	0.19 U	0.19 U	0.2 U
108-60-1	Bis(2-Chloroisopropyl)ether		0.19 U	0.21 U	0.19 U	0.19 U	0.2 U
117-81-7	Bis(2-Ethylhexyl)phthalate		0.19 U	0.21 U	0.19 U	0.19 U	0.2 U
85-68-7	Butylbenzylphthalate		0.19 U	0.21 U	0.19 U	0.19 U	0.2 U
86-74-8	Carbazole		0.19 U	0.21 U	0.19 U	0.19 U	0.2 U
218-01-9	Chrysene		0.19 U	0.21 U	0.19 U	0.19 U	0.2 U
84-74-2	Di-n-butylphthalate		0.19 U	0.21 U	0.11 J	0.19 U	0.2 U
117-84-0	Di-n-octylphthalate		0.19 U	0.21 U	0.19 U	0.19 U	0.2 U
53-70-3	Dibenzo[a,h]anthracene		0.19 U	0.21 U	0.19 U	0.19 U	0.2 U
132-64-9	Dibenzofuran		0.19 U	0.21 U	0.19 U	0.19 U	0.2 U
84-66-2	Diethylphthalate		0.19 U	0.21 U	0.19 U	0.19 U	0.2 U
131-11-3	Dimethylphthalate		0.19 U	0.21 U	0.19 U	0.19 U	0.2 U
206-44-0	Fluoranthene		0.19 U	0.21 U	0.19 U	0.19 U	0.2 U
86-73-7	Fluorene		0.19 U	0.21 U	0.19 U	0.19 U	0.2 U
118-74-1	Hexachlorobenzene		0.19 U	0.21 U	0.19 U	0.19 U	0.2 U
87-68-3	Hexachlorobutadiene		0.19 U	0.21 U	0.19 U	0.19 U	0.2 U
77-47-4	Hexachlorocyclopentadiene		0.57 U	0.64 U	0.57 U	0.56 U	0.6 U
67-72-1	Hexachloroethane		0.19 U	0.21 U	0.19 U	0.19 U	0.2 U
193-39-5	Indeno[1,2,3-cd]pyrene		0.19 U	0.21 U	0.19 U	0.19 U	0.2 U
78-59-1	Isophorone		0.19 U	0.21 U	0.19 U	0.19 U	0.2 U
621-64-7	N-Nitroso-Di-N-Propylamine		0.19 U	0.21 U	0.19 U	0.19 U	0.2 U
62-75-9	N-Nitrosodimethylamine		0.19 U	0.21 U	0.19 U	0.19 U	0.2 U
86-30-6	N-Nitrosodiphenylamine		0.19 U	0.21 U	0.19 U	0.19 U	0.2 U
91-20-3	Naphthalene		0.19 U	0.21 U	0.19 U	0.19 U	0.2 U
98-95-3	Nitrobenzene		0.19 U	0.21 U	0.19 U	0.19 U	0.2 U
87-86-5	Pentachlorophenol		0.19 U	0.21 U	0.19 U	0.19 U	0.2 U
85-01-8	Phenanthrene		0.19 U	0.21 U	0.19 U	0.19 U	0.2 U
108-95-2	Phenol		0.19 U	0.21 U	0.19 U	0.19 U	0.2 U
129-00-0	Pyrene		0.19 U	0.21 U	0.19 U	0.19 U	0.2 U
110-86-1	Pyridine		0.57 U	0.64 U	0.57 U	0.56 U	0.6 U

MG/KG Milligrams per Kilogram.
U: Not detected at the Method Detection Limit (MDL)/Practical Quantitation Level (PQL), value is shown adjacent to U
J: Analyte detected below PQL and is estimated

Table 5 C
Subsurface Soil Analytical Data Results
Building 124
JFK International Airport, New York

	Client Sample ID:	BH-124-4/MW-3 S-5	BH-124-3 S-5	BH-124-10/MW-5 S-5	BH-124-1/MW-1 S-4
	Veritech Sample ID:	AA99539	AA99541	AA99543	AA99685
	Sampling Date:	12/13/99	12/13/99	12/13/99	12/15/99
CAS #	Analyte Units:	MG/KG	MG/KG	MG/KG	MG/KG
12674-11-2	Aroclor-1016	0.02 U	0.018 U	0.02 U	0.019 U
11104-28-2	Aroclor-1221	0.02 U	0.018 U	0.02 U	0.019 U
11141-16-5	Aroclor-1232	0.02 U	0.018 U	0.02 U	0.019 U
53469-21-9	Aroclor-1242	0.02 U	0.018 U	0.02 U	0.019 U
12672-29-6	Aroclor-1248	0.02 U	0.018 U	0.02 U	0.019 U
11097-69-1	Aroclor-1254	0.02 U	0.018 U	0.02 U	0.019 U
11096-82-5	Aroclor-1260	0.02 U	0.018 U	0.02 U	0.48
309-00-2	Aldrin	0.0041 U	0.0036 U	0.0041 U	0.0037 U
319-84-6	Alpha-BHC	0.0041 U	0.0036 U	0.0041 U	0.0037 U
319-85-7	Beta-BHC	0.0041 U	0.0036 U	0.0041 U	0.0037 U
57-74-9	Chlordane	0.0081 U	0.0072 U	0.0081 U	0.0075 U
319-86-8	Delta-BHC	0.0041 U	0.0036 U	0.0041 U	0.0037 U
60-57-1	Dieldrin	0.0041 U	0.0036 U	0.0041 U	0.0037 U
959-98-8	Endosulfan I	0.0041 U	0.0036 U	0.0041 U	0.0037 U
33213-65-9	Endosulfan II	0.0041 U	0.0036 U	0.0041 U	0.0083
1031-07-8	Endosulfan Sulfate	0.0041 U	0.0036 U	0.0041 U	0.0037 U
72-20-8	Endrin	0.0041 U	0.0036 U	0.0041 U	0.0037 U
7421-93-4	Endrin Aldehyde	0.0041 U	0.0036 U	0.0041 U	0.032
53494-70-5	Endrin Ketone	0.0041 U	0.0036 U	0.0041 U	0.0037 U
58-89-9	Gamma-BHC	0.0041 U	0.0036 U	0.0041 U	0.0037 U
76-44-8	Heptachlor	0.0041 U	0.0036 U	0.0041 U	0.0037 U
1024-57-3	Heptachlor Epoxide	0.0041 U	0.0036 U	0.0041 U	0.0037 U
72-43-5	Methoxychlor	0.0041 U	0.0036 U	0.0041 U	0.0037 U
72-54-8	P,P'-DDD	0.0041 U	0.0036 U	0.0041 U	0.0037 U
72-55-9	P,P'-DDE	0.0041 U	0.0036 U	0.0041 U	0.0037 U
50-29-3	P,P'-DDT	0.0041 U	0.0036 U	0.0041 U	0.038
8001-35-2	Toxaphene	0.041 U	0.036 U	0.041 U	0.037 U

MG/KG: Milligrams per Kilogram
U: Not detected at the Method Detection Limit (MDL)/Practical Quantitation Level (PQL), value is shown adjacent to U
J: Analyte detected below the MDL/PQL and is estimated

Table 5 C
Subsurface Soil Analytical Data Results
Building 124
JFK International Airport, New York

	Client Sample ID:	BH-124-2/MW-2 S-3	BH-124-8/MW-4 S-5	BH-124-6 S-5	BH-124-5 S-5
	Veritech Sample ID:	AA99687	AA99689	AA99691	AA99693
	Sampling Date:	12/15/99	12/15/99	12/15/99	12/16/99
CAS #	Analyte Units:	MG/KG	MG/KG	MG/KG	MG/KG
12674-11-2	Aroclor-1016	0.019 U	0.019 U	0.021 U	0.019 U
11104-28-2	Aroclor-1221	0.019 U	0.019 U	0.021 U	0.019 U
11141-16-5	Aroclor-1232	0.019 U	0.019 U	0.021 U	0.019 U
53469-21-9	Aroclor-1242	0.019 U	0.019 U	0.021 U	0.019 U
12672-29-6	Aroclor-1248	0.019 U	0.019 U	0.021 U	0.019 U
11097-69-1	Aroclor-1254	0.019 U	0.019 U	0.021 U	0.019 U
11096-82-5	Aroclor-1260	0.019 U	0.019 U	0.021 U	0.019 U
309-00-2	Aldrin	0.38 U	0.0038 U	0.0079	0.0038 U
319-84-6	Alpha-BHC	0.38 U	0.0038 U	0.0043 U	0.0038 U
319-85-7	Beta-BHC	0.38 U	0.0038 U	0.0043 U	0.0038 U
57-74-9	Chlordane	0.77 U	0.0076 U	0.0085 U	0.0076 U
319-86-8	Delta-BHC	0.38 U	0.0038 U	0.0043 U	0.0038 U
60-57-1	Dieldrin	0.38 U	0.0038 U	0.0043 U	0.0056
959-98-8	Endosulfan I	0.38 U	0.0038 U	0.0043 U	0.0038 U
33213-65-9	Endosulfan II	0.38 U	0.0038 U	0.0043 U	0.0038 U
1031-07-8	Endosulfan Sulfate	0.38 U	0.0038 U	0.0043 U	0.0038 U
72-20-8	Endrin	0.38 U	0.0038 U	0.0043 U	0.0038 U
7421-93-4	Endrin Aldehyde	0.38 U	0.0038 U	0.0043 U	0.0038 U
53494-70-5	Endrin Ketone	0.38 U	0.0038 U	0.0043 U	0.0038 U
58-89-9	Gamma-BHC	0.38 U	0.0038 U	0.0043 U	0.0038 U
76-44-8	Heptachlor	0.38 U	0.0038 U	0.0058	0.0038 U
1024-57-3	Heptachlor Epoxide	0.38 U	0.0038 U	0.0043 U	0.0038 U
72-43-5	Methoxychlor	0.38 U	0.0038 U	0.0043 U	0.0038 U
72-54-8	P,P'-DDD	2.2	0.0038 U	0.0043 U	0.0038 U
72-55-9	P,P'-DDE	0.38 U	0.0038 U	0.0043 U	0.0038 U
50-29-3	P,P'-DDT	0.38 U	0.0038 U	0.0043 U	0.0038 U
8001-35-2	Toxaphene	3.8 U	0.038 U	0.043 U	0.038 U

MG/KG: Milligrams per Kilogram
U: Not detected at the Method Detection Limit (MDL)/Practical Quantitation Level (PQL), value is shown adjacent to U
J: Analyte detected below the MDL/PQL and is estimated

Table 5 C
Subsurface Soil Analytical Data Results
Building 124
JFK International Airport, New York

	Client Sample ID:	BH-124-7 S-5	BH-124-9 S-5
	Veritech Sample ID:	AA99695	AA99697
	Sampling Date:	12/16/99	12/16/99
CAS #	Analyte Units:	MG/KG	MG/KG
12674-11-2	Aroclor-1016	0.019 U	0.02 U
11104-28-2	Aroclor-1221	0.019 U	0.02 U
11141-16-5	Aroclor-1232	0.019 U	0.02 U
53469-21-9	Aroclor-1242	0.019 U	0.02 U
12672-29-6	Aroclor-1248	0.019 U	0.02 U
11097-69-1	Aroclor-1254	0.019 U	0.02 U
11096-82-5	Aroclor-1260	0.019 U	0.02 U
309-00-2	Aldrin	0.0037 U	0.004 U
319-84-6	Alpha-BHC	0.0037 U	0.004 U
319-85-7	Beta-BHC	0.0037 U	0.004 U
57-74-9	Chlordane	0.0075 U	0.008 U
319-86-8	Delta-BHC	0.0037 U	0.004 U
60-57-1	Dieldrin	0.0037 U	0.004 U
959-98-8	Endosulfan I	0.0037 U	0.004 U
33213-65-9	Endosulfan II	0.0037 U	0.004 U
1031-07-8	Endosulfan Sulfate	0.0037 U	0.004 U
72-20-8	Endrin	0.0037 U	0.004 U
7421-93-4	Endrin Aldehyde	0.0037 U	0.004 U
53494-70-5	Endrin Ketone	0.0037 U	0.004 U
58-89-9	Gamma-BHC	0.0037 U	0.004 U
76-44-8	Heptachlor	0.0037 U	0.004 U
1024-57-3	Heptachlor Epoxide	0.0037 U	0.004 U
72-43-5	Methoxychlor	0.0037 U	0.004 U
72-54-8	P,P'-DDD	0.0037 U	0.004 U
72-55-9	P,P'-DDE	0.0037 U	0.004 U
50-29-3	P,P'-DDT	0.0037 U	0.004 U
8001-35-2	Toxaphene	0.037 U	0.04 U

MG/KG: Milligrams per Kilogram
U: Not detected at the Method Detection Limit (MDL)/Practical Quantitation Level (PQL), value is shown adjacent to U
J: Analyte detected below the MDL/PQL and is estimated

Table 5 D
Subsurface Soil Analytical Data Results
Building 124
JFK International Airport, New York

CAS #	Analyte	Units:	Client Sample ID: BH-124-1/MW-1 S-4	BH-124-2/MW-2 S-3	BH-124-3 S-5	BH-124-4/MW-3 S-5
		Veritech Sample ID:	AA99685	AA99687	AA99541	AA99539
		Sampling Date:	12/15/99	12/15/99	12/13/99	12/13/99
		Units:	MG/KG	MG/KG	MG/KG	MG/KG
7440-36-0	Antimony	ppm	2.6	1.5 U	1.4 U	1.6 U
7440-38-2	Arsenic	ppm	2.5	3	2.1 U	2.3 U
7440-39-3	Barium	ppm	26	42	16	15
7440-41-7	Beryllium	ppm	0.2 U	0.21 U	0.2 U	0.22 U
7440-43-9	Cadmium	ppm	0.34 U	0.34 U	0.33 U	0.37 U
7440-47-3	Chromium	ppm	13	8.7	6.3	11
7440-50-8	Copper	ppm	30	10	7.8	8.3
7439-92-1	Lead	ppm	69	26	2.3 U	2.6 U
7439-97-6	Mercury	ppm	0.13	1.1	0.035 U	0.039 U
7440-02-0	Nickel	ppm	9.4	7.4	8.9	14
7782-49-2	Selenium	ppm	3 U	3.1 U	2.9 U	3.3 U
7440-22-4	Silver	ppm	1.3 U	1.4 U	1.3 U	1.5 U
7440-28-0	Thallium	ppm	1.1 U	1.1 U	1.1 U	1.2 U
7440-66-6	Zinc	ppm	42	26	20 U	22 U
57-12-5	Cyanide	ppm	0.28 U	0.29 U	0.27 U	0.3 U
103-95-2	Phenol	ppm	1.4 U	1.4 U	1.4 U	1.5 U
	Total Petroleum Hydrocarbons	ppm	23000	4700	37 U	41 U
	% Solids	Percent	89	87	92	82

MG/KG: Milligrams per Kilogram.
U: Not detected at the corresponding Method Detection (MDL)/Practical Quantitation Level (PQL), value is shown adjacent to U

Table 5 D
Subsurface Soil Analytical Data Results
Building 124
JFK International Airport, New York

CAS #	Analyte	Units:	BH-124-5 S-5	BH-124-8/MW-4 S-5	BH-124-6 S-5	BH-124-7 S-5	BH-124-9 S-5
		Client Sample ID:	BH-124-5 S-5	BH-124-8/MW-4 S-5	BH-124-6 S-5	BH-124-7 S-5	BH-124-9 S-5
		Veritech Sample ID:	AA99693	AA99689	AA99691	AA99695	AA99697
		Sampling Date:	12/16/99	12/15/99	12/15/99	12/16/99	12/16/99
		Units:	MG/KG	MG/KG	MG/KG	MG/KG	MG/KG
7440-36-0	Antimony	ppm	1.5 U	1.5 U	1.7 U	1.5 U	1.6 U
7440-38-2	Arsenic	ppm	2.2 U	2.2 U	2.4 U	2.1 U	2.3 U
7440-39-3	Barium	ppm	10	20	33	17	23
7440-41-7	Beryllium	ppm	0.2 U	0.2 U	0.23 U	0.2 U	0.22 U
7440-43-9	Cadmium	ppm	0.34 U	0.34 U	0.38 U	0.34 U	0.36 U
7440-47-3	Chromium	ppm	7.3	15	13	6.1	9.2
7440-50-8	Copper	ppm	5.3	5.8	11	7.4	8.6
7439-92-1	Lead	ppm	3.1	4.5	3.3	2.4 U	2.5 U
7439-97-6	Mercury	ppm	0.037 U	0.037 U	0.041 U	0.036 U	0.039 U
7440-02-0	Nickel	ppm	5.8	7.5	22	9	16
7782-49-2	Selenium	ppm	3.1 U	3.1 U	3.5 U	3 U	3.3 U
7440-22-4	Silver	ppm	1.4 U	1.4 U	1.5 U	1.3 U	1.4 U
7440-28-0	Thallium	ppm	1.1 U	1.1 U	1.3 U	1.1 U	1.2 U
7440-66-6	Zinc	ppm	20 U	20 U	23 U	20 U	29
57-12-5	Cyanide	ppm	0.28 U	0.28 U	0.32 U	0.28 U	0.3 U
103-95-2	Phenol	ppm	1.4 U	1.4 U	1.6 U	1.4 U	1.5 U
	Total Petroleum Hydrocarbons	ppm	61	52	140	53	42
	% Solids	Percent	88	88	78	89	83

MG/KG: Milligrams per Kilogram,
U: Not detected at the corresponding Method Detection (MDL)/Practical Quantitation Level (PQL), value is shown adjacent to U

Table 5 D
Subsurface Soil Analytical Data Results
Building 124
JFK International Airport, New York

		Client Sample ID:	BH-124-10/MW-5 S-5
		Veritech Sample ID:	AA99543
		Sampling Date:	12/13/99
CAS #	Analyte	Units:	MG/KG
7440-36-0	Antimony	ppm	1.6 U
7440-38-2	Arsenic	ppm	2.3 U
7440-39-3	Barium	ppm	54
7440-41-7	Beryllium	ppm	0.22 U
7440-43-9	Cadmium	ppm	0.37 U
7440-47-3	Chromium	ppm	17
7440-50-8	Copper	ppm	14
7439-92-1	Lead	ppm	2.6 U
7439-97-6	Mercury	ppm	0.039 U
7440-02-0	Nickel	ppm	22
7782-49-2	Selenium	ppm	3.3 U
7440-22-4	Silver	ppm	1.5 U
7440-28-0	Thallium	ppm	1.2 U
7440-66-6	Zinc	ppm	31
57-12-5	Cyanide	ppm	0.3 U
103-95-2	Phenol	ppm	1.5 U
	Total Petroleum Hydrocarbons	ppm	41 U
	% Solids	Percent	82

MG/KG: Milligrams per Kilogram,
U: Not detected at the corresponding Method Detection (MDL)/Practical Quantitation Level (PQL), value is shown adjacent to U

Table 6 A
Ground Water Analytical Data Results
Building 124
JFK International Airport, New York

CAS #	Analyte	Client Sample ID:	MW-1	MW-2	MW-3	MW-4	MW-5	MW-D
		Veritech Sample ID:	AB00091	AB00092	AB00093	AB00094	AB00095	AB00096
		Sampling Date:	12/22/99	12/22/99	12/22/99	12/22/99	12/22/99	12/22/99
		Units:	UG/L	UG/L	UG/L	UG/L	UG/L	UG/L
630-20-6	1,1,1,2-Tetrachloroethane		1 U	1 U	1 U	1 U	1 U	1 U
71-55-6	1,1,1-Trichloroethane		5 U	5 U	5 U	5 U	5 U	5 U
79-34-5	1,1,2,2-Tetrachloroethane		5 U	5 U	5 U	5 U	5 U	5 U
79-00-5	1,1,2-Trichloroethane		5 U	5 U	5 U	5 U	5 U	5 U
75-34-3	1,1-Dichloroethane		5 U	5 U	5 U	5 U	5 U	5 U
75-35-4	1,1-Dichloroethene		5 U	5 U	5 U	5 U	5 U	5 U
95-50-1	1,2-Dichlorobenzene		5 U	5 U	5 U	5 U	5 U	5 U
107-06-2	1,2-Dichloroethane		5 U	5 U	5 U	5 U	5 U	5 U
78-87-5	1,2-Dichloropropane		5 U	5 U	5 U	5 U	5 U	5 U
541-73-1	1,3-Dichlorobenzene		5 U	5 U	5 U	5 U	5 U	5 U
106-46-7	1,4-Dichlorobenzene		5 U	5 U	5 U	5 U	5 U	5 U
78-93-3	2-Butanone		25 U	25 U	25 U	25 U	25 U	25 U
110-75-8	2-Chloroethylvinylether		5 U	5 U	5 U	5 U	5 U	5 U
591-78-6	2-Hexanone		20 U	20 U	20 U	20 U	20 U	20 U
108-10-1	4-Methyl-2-Pentanone		20 U	20 U	20 U	20 U	20 U	20 U
67-64-1	Acetone		17 J	17 J	20 U	11 J	20 U	14 J
107-02-8	Acrolein		15 U	15 U	15 U	15 U	15 U	15 U
107-13-1	Acrylonitrile		1.8 U	1.8 U	1.8 U	1.8 U	1.8 U	1.8 U
71-43-2	Benzene		1 U	1 U	1 U	1 U	1 U	1 U
75-27-4	Bromodichloromethane		5 U	5 U	5 U	5 U	5 U	5 U
75-25-2	Bromoform		5 U	5 U	5 U	5 U	5 U	5 U
74-83-9	Bromomethane		5 U	5 U	5 U	5 U	5 U	5 U
75-15-0	Carbon Disulfide		5 U	24	5 U	5 U	5 U	5 U
56-23-5	Carbon Tetrachloride		5 U	5 U	5 U	5 U	5 U	5 U
108-90-7	Chlorobenzene		5 U	5 U	5 U	5 U	5 U	5 U
75-00-3	Chloroethane		5 U	5 U	5 U	5 U	5 U	5 U
67-66-3	Chloroform		5.3	5 U	5 U	5 U	5 U	4.1 J
74-87-3	Chloromethane		5 U	5 U	5 U	5 U	5 U	5 U
156-59-2	cis-1,2-Dichloroethene		5 U	5 U	5 U	5 U	5 U	5 U
10061-01-5	cis-1,3-Dichloropropene		5 U	5 U	5 U	5 U	5 U	5 U
108-20-3	di-Isopropyl-ether		5 U	5 U	5 U	5 U	5 U	5 U
124-48-1	Dibromochloromethane		5 U	5 U	5 U	5 U	5 U	5 U
75-71-8	Dichlorodifluoromethane							
100-41-4	Ethylbenzene		1 U	1 U	1 U	1 U	1 U	1 U
1330-20-7	M&P-Xylenes		2 U	2 U	2 U	2 U	2 U	2 U
1634-04-4	Methyl-t-butyl ether		1 U	1 U	1 U	1 U	1 U	1 U
75-09-2	Methylene Chloride		5 U	5 U	5 U	1.3 JB	1.2 JB	1.3 JB
95-47-6	O-Xylene		1 U	1 U	1 U	1 U	1 U	1 U
100-42-5	Styrene		1 U	1 U	1 U	1 U	1 U	1 U
75-65-0	t-Butyl Alcohol		10 U	10 U	10 U	10 U	10 U	10 U
127-18-4	Tetrachloroethene		5 U	5 U	5 U	5 U	5 U	5 U
108-88-3	Toluene		1 U	1 U	1 U	1 U	1 U	1 U
156-60-5	trans-1,2-Dichloroethene		5 U	5 U	5 U	5 U	5 U	5 U
10061-02-6	trans-1,3-Dichloropropene		5 U	5 U	5 U	5 U	5 U	5 U
79-01-6	Trichloroethene		5 U	5 U	5 U	5 U	5 U	5 U
75-69-4	Trichlorofluoromethane		5 U	5 U	5 U	5 U	5 U	5 U
108-05-4	Vinyl Acetate		10 U	10 U	10 U	10 U	10 U	10 U
75-01-4	Vinyl Chloride		5 U	5 U	5 U	5 U	5 U	5 U

UG/ L: Micrograms per Liter
U: Not detected at the Method Detection Limit (MDL), value is shown adjacent to U
J: Analyte detected below MDL and is estimated

Table 6 A
Ground Water Analytical Data Results
Building 124
JFK International Airport, New York

CAS #	Analyte	Units:	F-BLANK	T-BLANK
		Client Sample ID:	F-BLANK	T-BLANK
		Veritech Sample ID:	AB00097	AB00098
		Sampling Date:	12/22/99	12/22/99
		Units:	UG/L	UG/L
630-20-6	1,1,1,2-Tetrachloroethane		1 U	1 U
71-55-6	1,1,1-Trichloroethane		5 U	5 U
79-34-5	1,1,2,2-Tetrachloroethane		5 U	5 U
79-00-5	1,1,2-Trichloroethane		5 U	5 U
75-34-3	1,1-Dichloroethane		5 U	5 U
75-35-4	1,1-Dichloroethene		5 U	5 U
95-50-1	1,2-Dichlorobenzene		5 U	5 U
107-06-2	1,2-Dichloroethane		5 U	5 U
78-87-5	1,2-Dichloropropane		5 U	5 U
541-73-1	1,3-Dichlorobenzene		5 U	5 U
106-46-7	1,4-Dichlorobenzene		5 U	5 U
78-93-3	2-Butanone		25 U	25 U
110-75-8	2-Chloroethylvinylether		5 U	5 U
591-78-6	2-Hexanone		20 U	20 U
108-10-1	4-Methyl-2-Pentanone		20 U	20 U
67-64-1	Acetone		20 U	20 U
107-02-8	Acrolein		15 U	15 U
107-13-1	Acrylonitrile		1.8 U	1.8 U
71-43-2	Benzene		1 U	1 U
75-27-4	Bromodichloromethane		5 U	5 U
75-25-2	Bromoform		5 U	5 U
74-83-9	Bromomethane		5 U	5 U
75-15-0	Carbon Disulfide		5 U	5 U
56-23-5	Carbon Tetrachloride		5 U	5 U
108-90-7	Chlorobenzene		5 U	5 U
75-00-3	Chloroethane		5 U	5 U
67-66-3	Chloroform		5 U	5 U
74-87-3	Chloromethane		5 U	5 U
156-59-2	cis-1,2-Dichloroethene		5 U	5 U
10061-01-5	cis-1,3-Dichloropropene		5 U	5 U
108-20-3	di-Isopropyl-ether		5 U	5 U
124-48-1	Dibromochloromethane		5 U	5 U
75-71-8	Dichlorodifluoromethane			
100-41-4	Ethylbenzene		1 U	1 U
1330-20-7	M&P-Xylenes		2 U	2 U
1634-04-4	Methyl-t-butyl ether		1 U	1 U
75-09-2	Methylene Chloride		1.8 JB	5 U
95-47-6	O-Xylene		1 U	1 U
100-42-5	Styrene		1 U	1 U
75-65-0	t-Butyl Alcohol		10 U	10 U
127-18-4	Tetrachloroethene		5 U	5 U
108-88-3	Toluene		1 U	1 U
156-60-5	trans-1,2-Dichloroethene		5 U	5 U
10061-02-6	trans-1,3-Dichloropropene		5 U	5 U
79-01-6	Trichloroethene		5 U	5 U
75-69-4	Trichlorofluoromethane		5 U	5 U
108-05-4	Vinyl Acetate		10 U	10 U
75-01-4	Vinyl Chloride		5 U	5 U

UG/ L: Micrograms per Liter
U: Not detected at the Method Detection Limit (MDL), value is shown adjacent to U
J: Analyte detected below MDL and is estimated

Table 6 B
Ground Water Analytical Data Results
Building 124
JFK International Airport, New York

CAS #	Analyte	Client Sample ID:	MW-1	MW-2	MW-3	MW-4	MW-5	MW-D	F-BLANK
		Veritech Sample ID:	AB00091	AB00092	AB00093	AB00094	AB00095	AB00096	AB00097
		Sampling Date:	12/22/99	12/22/99	12/22/99	12/22/99	12/22/99	12/22/99	12/22/99
		Units:	UG/L	UG/L	UG/L	UG/L	UG/L	UG/L	UG/L
120-82-1	1,2,4-Trichlorobenzene		5 U	5 U	5 U	5 U	5 U	5 U	5 U
95-50-1	1,2-Dichlorobenzene		5 U	5 U	5 U	5 U	5 U	5 U	5 U
122-66-7	1,2-Diphenylhydrazine		1 U	1 U	1 U	1 U	1 U	1 U	1 U
541-73-1	1,3-Dichlorobenzene		5 U	5 U	5 U	5 U	5 U	5 U	5 U
106-46-7	1,4-Dichlorobenzene		5 U	5 U	5 U	5 U	5 U	5 U	5 U
95-95-4	2,4,5-Trichlorophenol		5 U	5 U	5 U	5 U	5 U	5 U	5 U
88-06-2	2,4,6-Trichlorophenol		5 U	5 U	5 U	5 U	5 U	5 U	5 U
120-83-2	2,4-Dichlorophenol		5 U	5 U	5 U	5 U	5 U	5 U	5 U
105-67-9	2,4-Dimethylphenol		5 U	5 U	5 U	5 U	5 U	5 U	5 U
51-28-5	2,4-Dinitrophenol		10 U	10 U	10 U	10 U	10 U	10 U	10 U
121-14-2	2,4-Dinitrotoluene		5 U	5 U	5 U	5 U	5 U	5 U	5 U
606-20-2	2,6-Dinitrotoluene		5 U	5 U	5 U	5 U	5 U	5 U	5 U
91-58-7	2-Chloronaphthalene		5 U	5 U	5 U	5 U	5 U	5 U	5 U
95-57-8	2-Chlorophenol		5 U	5 U	5 U	5 U	5 U	5 U	5 U
91-57-6	2-Methylnaphthalene		5 U	3.1 J	5 U	5 U	5 U	5 U	5 U
95-48-7	2-Methylphenol		5 U	5 U	5 U	5 U	5 U	5 U	5 U
88-74-4	2-Nitroaniline		5 U	5 U	5 U	5 U	5 U	5 U	5 U
88-75-5	2-Nitrophenol		5 U	5 U	5 U	5 U	5 U	5 U	5 U
106-44-5	3&4-Methylphenol		5 U	5 U	5 U	5 U	5 U	5 U	5 U
91-94-1	3,3'-Dichlorobenzidine		5 U	5 U	5 U	5 U	5 U	5 U	5 U
99-09-2	3-Nitroaniline		5 U	5 U	5 U	5 U	5 U	5 U	5 U
121-14-2	4,6-Dinitro-2-methylphenol		5 U	5 U	5 U	5 U	5 U	5 U	5 U
101-55-3	4-Bromophenyl-phenylether		5 U	5 U	5 U	5 U	5 U	5 U	5 U
59-50-7	4-Chloro-3-methylphenol		5 U	5 U	5 U	5 U	5 U	5 U	5 U
106-47-8	4-Chloroaniline		5 U	5 U	5 U	5 U	5 U	5 U	5 U
7005-72-3	4-Chlorophenyl-phenylether		5 U	5 U	5 U	5 U	5 U	5 U	5 U
100-01-6	4-Nitroaniline		5 U	5 U	5 U	5 U	5 U	5 U	5 U
100-02-7	4-Nitrophenol		5 U	5 U	5 U	5 U	5 U	5 U	5 U
83-32-9	Acenaphthene		5 U	1.4 J	5 U	5 U	5 U	5 U	5 U
208-96-8	Acenaphthylene		5 U	5 U	5 U	5 U	5 U	5 U	5 U
120-12-7	Anthracene		5 U	5 U	5 U	5 U	5 U	5 U	5 U
92-87-5	Benzidine		10 U	10 U	10 U	10 U	10 U	10 U	10 U
56-55-3	Benzo[a]anthracene		5 U	5 U	5 U	5 U	5 U	5 U	5 U
50-32-8	Benzo[a]pyrene		5 U	5 U	5 U	5 U	5 U	5 U	5 U
205-99-2	Benzo[b]Fluoranthene		5 U	5 U	5 U	5 U	5 U	5 U	5 U
191-24-2	Benzo[g,h,i]perylene		5 U	5 U	5 U	5 U	5 U	5 U	5 U
207-08-9	Benzo[k]Fluoranthene		5 U	5 U	5 U	5 U	5 U	5 U	5 U
65-85-0	Benzoic Acid		10 U	10 U	10 U	10 U	10 U	10 U	10 U
100-51-6	Benzyl Alcohol		5 U	5 U	5 U	5 U	5 U	5 U	5 U
111-91-1	Bis(2-Chloroethoxy)Methane		5 U	5 U	5 U	5 U	5 U	5 U	5 U
111-44-4	Bis(2-Chloroethyl)ether		5 U	5 U	5 U	5 U	5 U	5 U	5 U
108-60-1	Bis(2-Chloroisopropyl)ether		5 U	5 U	5 U	5 U	5 U	5 U	5 U
117-81-7	Bis(2-Ethylhexyl)phthalate		2.5 JB	3.4 JB	5 B	5 U	6.3 B	1.8 JB	1 JB
85-68-7	Butylbenzylphthalate		5 U	5 U	5 U	5 U	5 U	5 U	5 U
86-74-8	Carbazole		5 U	5 U	5 U	5 U	5 U	5 U	5 U
218-01-9	Chrysene		5 U	5 U	5 U	5 U	5 U	5 U	5 U
84-74-2	Di-n-butylphthalate		5 U	5 U	5 U	5 U	5 U	5 U	5 U
117-84-0	Di-n-octylphthalate		5 U	5 U	1.5 J	5 U	1.7 J	5 U	5 U
53-70-3	Dibenzo[a,h]anthracene		5 U	5 U	5 U	5 U	5 U	5 U	5 U
132-64-9	Dibenzofuran		5 U	5 U	5 U	5 U	5 U	5 U	5 U
84-66-2	Diethylphthalate		3.7 JB	7.1 B	6.2 B	5 U	1.5 JB	1.2 JB	1.3 JB
131-11-3	Dimethylphthalate		5 U	5 U	5 U	5 U	5 U	5 U	5 U
206-44-0	Fluoranthene		5 U	5 U	5 U	5 U	5 U	5 U	5 U
86-73-7	Fluorene		5 U	1.5 J	5 U	5 U	5 U	5 U	5 U
118-74-1	Hexachlorobenzene		5 U	5 U	5 U	5 U	5 U	5 U	5 U
87-68-3	Hexachlorobutadiene		5 U	5 U	5 U	5 U	5 U	5 U	5 U
77-47-4	Hexachlorocyclopentadiene		15 U	15 U	15 U	15 U	15 U	15 U	15 U
67-72-1	Hexachloroethane		5 U	5 U	5 U	5 U	5 U	5 U	5 U
193-39-5	Indeno(1,2,3-cd)pyrene		5 U	5 U	5 U	5 U	5 U	5 U	5 U
78-59-1	Isophorone		5 U	5 U	5 U	5 U	5 U	5 U	5 U
621-64-7	N-Nitroso-Di-N-Propylamine		5 U	5 U	5 U	5 U	5 U	5 U	5 U
62-75-9	N-Nitrosodimethylamine		5 U	5 U	5 U	5 U	5 U	5 U	5 U
86-30-6	N-Nitrosodiphenylamine		5 U	5 U	5 U	5 U	5 U	5 U	5 U
91-20-3	Naphthalene		5 U	1.9 J	5 U	5 U	5 U	5 U	5 U
98-95-3	Nitrobenzene		5 U	5 U	5 U	5 U	5 U	5 U	5 U
87-86-5	Pentachlorophenol		5 U	5 U	5 U	5 U	5 U	5 U	5 U
85-01-8	Phenanthrene		5 U	1.8 J	5 U	5 U	5 U	5 U	5 U
108-95-2	Phenol		5 U	5 U	5 U	5 U	5 U	5 U	5 U
129-00-0	Pyrene		5 U	5 U	5 U	5 U	5 U	5 U	5 U
110-86-1	Pyridine		15 U	15 U	15 U	15 U	15 U	15 U	15 U

UG/L: Micrograms per Liter
U: Not detected at the Method Detection Limit (MDL), value is shown adjacent to U
J: Analyte detected below MDL and is estimated

Table 6 C
Ground Water Analytical Data Results
Building 124
JFK International Airport, New York

CAS #	Analyte	Client Sample ID:	MW-1	MW-2	MW-3	MW-4	MW-5	MW-D	F-BLANK
		Veritech Sample ID:	AB00091	AB00092	AB00093	AB00094	AB00095	AB00096	AB00097
		Sampling Date:	12/22/99	12/22/99	12/22/99	12/22/99	12/22/99	12/22/99	12/22/99
		Units:	UG/L	UG/L	UG/L	UG/L	UG/L	UG/L	UG/L
12674-11-2	Aroclor-1016		0.5 U	0.5 U	0.5 U	0.5 U	0.5 U	0.5 U	0.5 U
11104-28-2	Aroclor-1221		0.5 U	0.5 U	0.5 U	0.5 U	0.5 U	0.5 U	0.5 U
11141-16-5	Aroclor-1232		0.5 U	0.5 U	0.5 U	0.5 U	0.5 U	0.5 U	0.5 U
53469-21-9	Aroclor-1242		0.5 U	0.5 U	0.5 U	0.5 U	0.5 U	0.5 U	0.5 U
12672-29-6	Aroclor-1248		0.5 U	0.5 U	0.5 U	0.5 U	0.5 U	0.5 U	0.5 U
11097-69-1	Aroclor-1254		0.5 U	0.5 U	0.5 U	0.5 U	0.5 U	0.5 U	0.5 U
11096-82-5	Aroclor-1260		0.5 U	0.5 U	0.5 U	0.5 U	0.5 U	0.5 U	0.5 U
309-00-2	Aldrin		0.1 U	0.1 U	0.1 U	0.1 U	0.1 U	0.1 U	0.1 U
319-84-6	Alpha-BHC		0.1 U	0.1 U	0.1 U	0.1 U	0.1 U	0.1 U	0.1 U
319-85-7	Beta-BHC		0.1 U	0.1 U	0.1 U	0.1 U	0.1 U	0.1 U	0.1 U
57-74-9	Chlordane		0.2 U	0.2 U	0.2 U	0.2 U	0.2 U	0.2 U	0.2 U
319-86-8	Delta-BHC		0.1 U	0.1 U	0.1 U	0.1 U	0.1 U	0.1 U	0.1 U
60-57-1	Dieldrin		0.1 U	0.1 U	0.1 U	0.1 U	0.1 U	0.1 U	0.1 U
959-98-8	Endosulfan I		0.1 U	0.1 U	0.1 U	0.1 U	0.1 U	0.1 U	0.1 U
33213-65-9	Endosulfan II		0.1 U	0.1 U	0.1 U	0.1 U	0.1 U	0.1 U	0.1 U
1031-07-8	Endosulfan Sulfate		0.1 U	0.1 U	0.1 U	0.1 U	0.1 U	0.1 U	0.1 U
72-20-8	Endrin		0.1 U	0.1 U	0.1 U	0.1 U	0.1 U	0.1 U	0.1 U
7421-93-4	Endrin Aldehyde		0.1 U	0.1 U	0.1 U	0.1 U	0.1 U	0.1 U	0.1 U
53494-70-5	Endrin Ketone		0.1 U	0.1 U	0.1 U	0.1 U	0.1 U	0.1 U	0.1 U
58-89-9	Gamma-BHC		0.1 U	0.1 U	0.1 U	0.1 U	0.1 U	0.1 U	0.1 U
76-44-8	Heptachlor		0.1 U	0.1 U	0.1 U	0.1 U	0.1 U	0.1 U	0.1 U
1024-57-3	Heptachlor Epoxide		0.1 U	0.1 U	0.1 U	0.1 U	0.1 U	0.1 U	0.1 U
72-43-5	Methoxychlor		0.1 U	0.1 U	0.1 U	0.1 U	0.1 U	0.1 U	0.1 U
72-54-8	P,P'-DDD		0.1 U	0.11	0.1 U	0.1 U	0.1 U	0.1 U	0.1 U
72-55-9	P,P'-DDE		0.1 U	0.1 U	0.1 U	0.1 U	0.1 U	0.1 U	0.1 U
50-29-3	P,P'-DDT		0.1 U	0.1 U	0.1 U	0.23	0.12	0.1 U	0.1 U
8001-35-2	Toxaphene		1 U	1 U	1 U	1 U	1 U	1 U	1 U

UG/L: Micrograms per Liter
U: Not detected at the Method Detection Limit (MDL), value is shown adjacent to U
J: Analyte detected below MDL and is estimated

Table 6 D
Ground Water Analytical Data Results
Building 124
JFK International Airport, New York

CAS #	Analyte	Client Sample ID:	MW-1	MW-2	MW-3	MW-4	MW-5	MW-D	F-BLANK
		Veritech Sample ID:	AB00091	AB00092	AB00093	AB00094	AB00095	AB00096	AB00097
		Sampling Date:	12/22/99	12/22/99	12/22/99	12/22/99	12/22/99	12/22/99	12/22/99
		Units:	UG/L	UG/L	UG/L	UG/L	UG/L	UG/L	UG/L
7440-36-0	Antimony		10 U	10 U	10 U	10 U	10 U	10 U	10 U
7440-38-2	Arsenic		11	81	63	68	37	14	6 U
7440-39-3	Barium		150	490	460	720	430	170	9.4 U
7440-41-7	Beryllium		0.7 U	0.7 U	0.7 U	1.8	0.7 U	0.7 U	0.7 U
7440-43-9	Cadmium		1.1 U	1.1 U	1.1 U	1.1 U	1.1 U	1.1 U	1.1 U
7440-47-3	Chromium		70	340	420	560	150	87	4.6 U
7440-50-8	Copper		75	590	350	590	200	94	70 U
7439-92-1	Lead		69	330	280	320	160	84	7.6 U
7439-97-6	Mercury		0.3 U	1.2	1.7	1.8	0.34	0.3 U	0.3 U
7440-02-0	Nickel		69	330	260	500	230	91	18 U
7782-49-2	Selenium		40 U	40 U	40 U	40 U	40 U	40 U	40 U
7440-22-4	Silver		2.5 U	2.5 U	2.5 U	2.5 U	2.5 U	2.5 U	2.5 U
7440-28-0	Thallium		7.5 U	7.5 U	7.5 U	7.5 U	7.5 U	7.5 U	7.5 U
7440-66-6	Zinc		160	440	420	640	330	180	44
57-12-5	Cyanide		10 U	10 U	10 U	10 U	10 U	10 U	10 U
103-95-2	Phenol		50 U	50 U	50 U	50 U	50 U	50 U	50 U
	Total Petroleum Hydrocarbons		4300	5700	1700	1600	1400	6600	1000

UG/L: Micrograms per Liter
U: Not detected at the Method Detection Limit (MDL), value is shown adjacent to U

APPENDIX A

Survey Results, Soil Boring Logs, Well Construction Data

PA 323
6-76

THE PORT AUTHORITY OF NY & NJ
One World Trade Center, New York, N.Y. 10048

FIELD COMPUTATION SHEET

File No. 86 Acc. No. ____ Page No. 12899
Sheet No. 1 Of 1

Project JFK IA Contract No. A3992.025 Office JFK-EA
Computer C. F. Date 12-23-99 Checked By ____ Date ____
Subject Loc. & Elev. M. Wells & B. Holes by Bldg. 124

MONITOR WELLS & BORING HOLES VICINITY BLDG 124

SOUTH	EAST	Surface RIM ELEV.	Well PIPE ELEV	MONITOR WELLS
52064	66066	14.12	13.85	[illegible]
52039	66169	13.30	12.87	[illegible]
52068	66216	13.68	13.26	[illegible]
52183	66128	14.05	13.82	[illegible]
52127	66312	13.67	13.39	[illegible]

SOUTH	EAST	GRND ELEV.	BORINGS
52038	66246	13.55	[illegible]
52142	66103	14.03	[illegible]
52114	66200	13.85	[illegible]
52113	66205	13.83	"BH124-6A"
52077	66309	13.65	"BH124-7"
52154	66227	13.82	"BH124-9"

PA 547
6-90

THE PORT AUTHORITY OF NY & NJ

Engineering Department
Construction Division
Materials Engineering Section

BORING REPORT

BH-124-1/MW-1 | SHEET 1 OF 4

PROJECT	NAME OF CONTRACTOR	BORING NO.	SURFACE ELEV.
JFK - Bldg 124	Craig	~~BH-124-1~~ ~~MW-124-1~~ MW-1	

LOCATION	CONTRACT NO.	DATE
Laid out as per drawing ±45' So of S.W. Corner Bldg 124	426-99-006	12/15/99

SPOON	CASING SIZE	HOLE TYPE
3 "O.D. 2 3/8 "I.D.	Augers	'A' monitor

HAMMER	HAMMER
140 # FALL 30 "	# FALL "

DRILLER: S. Burns

INSPECTOR: T. Ryan

GROUND WATER LEVEL

Date	Time	Depth	Remarks
12/15/99	AM	9.0'	In S-5

CASING BLOWS/FT.	DEPTH	SPOON BLOWS/6"	RE-COV'D[1]	SAMP.[2] NO.	[3]SAMPLE DESCRIPTION AND REMARKS ——— LINE LOCATES CHANGE OF PROFILE
with Hand	0				~~ASPHALT~~ 0.1' ~~GRAVEL~~ 0.5
		Hand auger	Full Rec	1	Fill - Br M-F Sand, lit G., tr Silt
				2	Same
	5			3	Same
Augers		12-13 15-11	20"	4	Same w/ layer of Misc Fill - Silt, Glass, Wood etc w/ fuel odor
		15-17 16-20	20"	5	Fill - Br M-F Sand, tr Silt, tr G.
	10	14-13 12-16	23"	6	Same
		15-17 20-21	18"	7	Same
	15				14.0' Bottom of Boring

Note; Samples #1 & 4 were saved for testing. all other samples were screened w/ PID & then discarded.

NOTES: 1 — Length recovered; 0" — Loss of Sample, T — Trap used
2 — U = undisturbed; A = auger; OER = open end rod; V = vane
3 — Log depth of change in color of wash water, loss of water, artesian water, sand heave in casing, etc.

PORT AUTHORITY OF NY & NJ

Engineering Department - Materials Division

Well Installation Report

Sheet 2 of 4

PROJECT	CONTRACT NO.
JFK- Bldg 124	426-99-006
LOCATION: Laid out as per drawing ±45' So. of N.W Corner Bldg 124	CONTRACTOR: Craig

WELL NO.	WELL TYPE	INSPECTOR	DRILLER	DATE
~~124~~ MW-1	A monitor	T. Ryan	S. Burns	12/15/99

Well Development Report

(NOTE: WATER LEVEL READINGS FROM TOP OF PVC)

DATE	WATER LEVEL BEFORE	WATER LEVEL AFTER	TAKEN
12/15/99	9.2'	9.2'	15 MINUTES AFTER

L1 = .3'

L2 = 3.7'

L3 = 10.0'

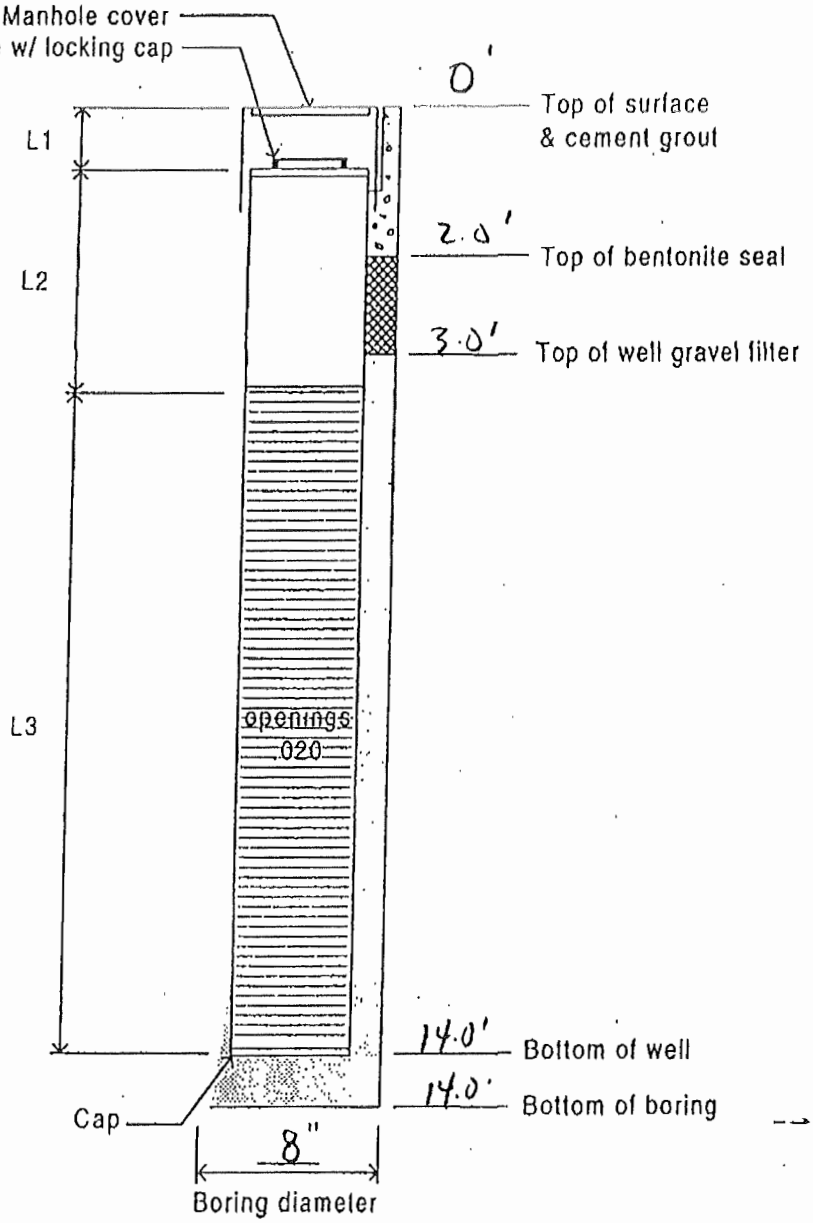

REMARKS:

THE PORT AUTHORITY OF ...

ENGINEERING DEPARTMENT
MATERIALS ENGINEERING DIVISION
PID READINGS

PROJECT: JFK - Bldg 124

BORING No. ~~MW-124-1~~ BH-124-1 DATE: 12/15/99

FIELD READINGS BY: T. Ryan PID Model: 7

TIME	SAMPLE No.	IN-SITU Split Spoon Reading	HEAD-Space Reading	BREATHING Zone Reading	REMARKS
AM	1		0		
	2		0		
	3		0		
	4		3.5		
	5		0		
	6		0		
	7		0		

THE PORT AUTHORITY OF N.Y & N.J.

ENGINEERING DEPARTMENT
MATERIALS ENGINEERING DIVISION
CHAIN OF CUSTODY RECORD

Sheet 4 of 4

PROJECT: JFK - Bldg 124

LOCATION: Laid out as per drawing ±45' So. of S.W. Bldg 124 corner | DATE: 12/15/99

BORING No: ~~MW-124-1~~ MW-1 | TOTAL No. OF SAMPLES: 2 ~~[illegible]~~

SIGNATURE OF ALL PRESENT AT SAMPLING: T. Ryan

RELINQUISHED BY (SIGN) T. Ryan	DATE 12/15/99 TIME	RECEIVED BY (SIGN)
RELINQUISHED BY (SIGN)	DATE TIME	RECEIVED BY (SIGN)
RELINQUISHED BY (SIGN)	DATE TIME	RECEIVED BY LAB

REMARKS: 2 samples in 2-16oz jars & 2-Voa jars ~~[illegible]~~.

PA 547
6-90

THE PORT AUTHORITY OF NY & NJ

Engineering Department
Construction Division
Materials Engineering Section

BORING REPORT

BH-124-2 / MW2

SHEET 1 OF 4

PROJECT: JFK - Bldg 124	NAME OF CONTRACTOR: Craig	BORING NO. ~~BH-124-2~~ ~~MW-124-2~~	SURFACE ELEV.
LOCATION: Laid out as per drawing ±25' No of N.W. corner Bldg 124		CONTRACT NO. 426-99-006	DATE 12/15/99

SPOON	CASING SIZE	HOLE TYPE
3 "O.D. 2 3/8 "I.D.	Augers	A monitor

HAMMER	HAMMER
140 # FALL 30 "	# FALL "

DRILLER: S. Burns

INSPECTOR: T. Ryan

GROUND WATER LEVEL

Date	Time	Depth	Remarks
12/15/99	AM	9.0'	In S-5

CASING BLOWS/FT.	DEPTH	SPOON BLOWS/6"	RE-COV'D [1]	SAMP. [2] NO.	[3] SAMPLE DESCRIPTION AND REMARKS LINE LOCATES CHANGE OF PROFILE
After Hand	0	Hand	Full		~~ASPHALT~~ ~~GRAVEL~~ ~~8.5'~~
		auger	Rec	1	Fill - Br C-F Sand, some Gr., tr Silt, tr Cobbles
				2	Same
	5			3	Fill - Br M-F Sand, tr Silt (Stain/odor)
ers		10-9		4	Fill - Br M-F Sand, tr Silt, tr Gr.
		11-13	18"		
		14-15		5	Same
	10	17-20	21"		
		10-13		6	Same
		14-15	20"		
		13-14		7	Same
		17-15	24"		14.0'
	15				Bottom of Boring

Note: Sample # 1 & 3 were saved for testing. All other samples were screened w/ PID & then discarded.

NOTES: 1 — Length recovered; 0" — Loss of Sample, T — Trap used
2 — U = undisturbed; A = auger; OER = open end rod; V = vane
3 — Log depth of change in color of wash water, loss of water, artesian water, sand heave in casing, etc.

PORT AUTHORITY OF NY & NJ

Engineering Department - Materials Division

Installation Report

Sheet 2 of 4

PROJECT				CONTRACT NO.
JFK- Bldg 124				426-99-006
LOCATION				CONTRACTOR
Laid out as per drawing ±25' No. of N.W. corner Bldg 124				Craig
WELL NO.	WELL TYPE	INSPECTOR	DRILLER	DATE
MW-124-2	Monitor	T. Ryan	S. Burns	12/15/99

Well Development Report

(NOTE: WATER LEVEL READINGS FROM TOP OF PVC)

DATE				
12/15/99	WATER LEVEL BEFORE 9.8'	WATER LEVEL AFTER 10.0'	TAKEN 15 MINUTES AFTER	

2 " dia. PVC pipe w/ locking cap

L1 = 1.3'

L2 = 3.7'

L3 = 10.0'

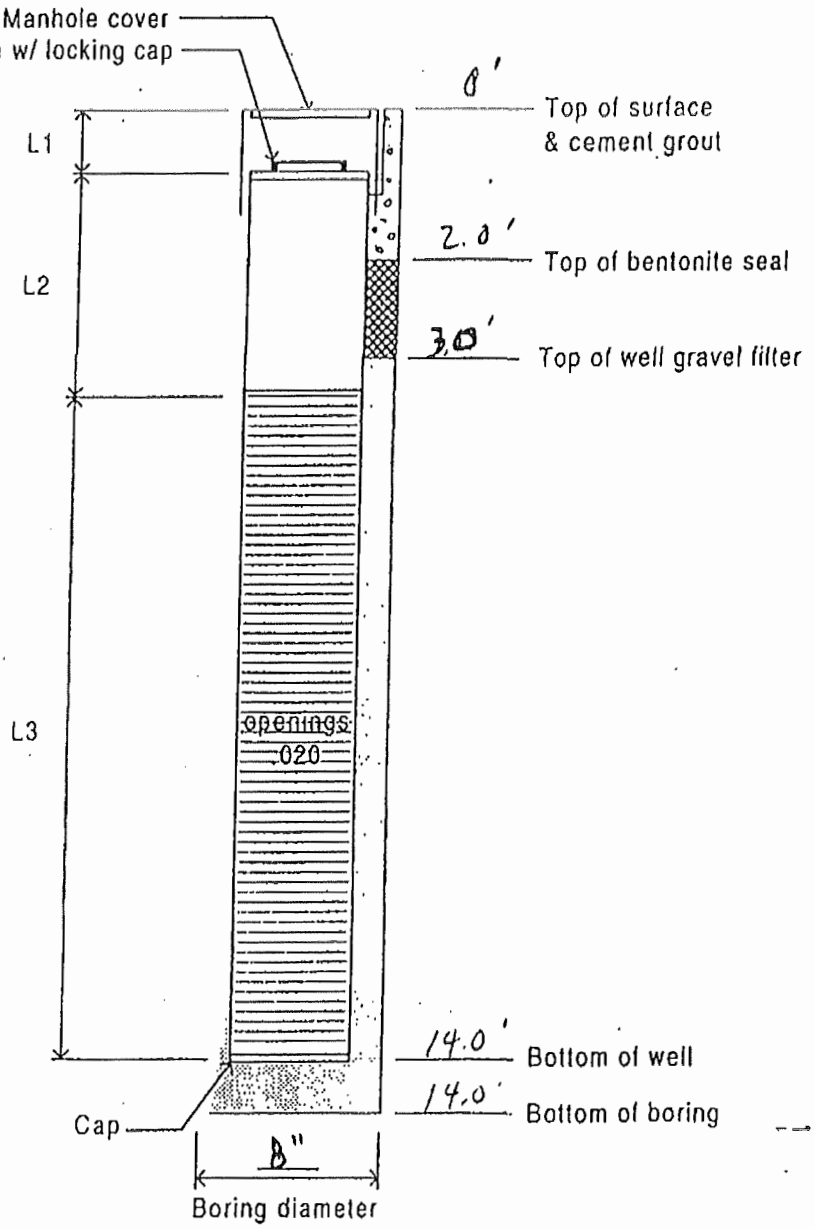

REMARKS:

THE PORT AUTHORITY OF N.Y. & N.J.

ENGINEERING DEPARTMENT

MATERIALS ENGINEERING DIVISION

PID READINGS

Sheet 3 of 4

PROJECT: JFK - Bldg 124

BORING No. MW-124-2 | DATE: 12/15/99

FIELD READINGS BY: T. Ryan | PID Model: 7

TIME	SAMPLE No.	IN-SITU Split Spoon Reading	HEAD-Space Reading	BREATHING Zone Reading	REMARKS
AM	1		0		
	2		0.9	0	
	3		75.6	0	(stained / odor)
	4		4.1	0	
	5		3.5	0	
	6		1.0	0	
	7		0		

THE PORT AUTHORITY OF N.Y & N.J.

ENGINEERING DEPARTMENT
MATERIALS ENGINEERING DIVISION
CHAIN OF CUSTODY RECORD

Sheet 4 of 4

PROJECT: JFK - Bldg 124

LOCATION: Laid out as per drawing | DATE: 12/15/99

BORING No: MW-124-2 | TOTAL No. OF SAMPLES: 2 + FB

SIGNATURE OF ALL PRESENT AT SAMPLING: T. Ryan

RELINQUISHED BY (SIGN) T. Ryan	DATE 12/15/99 TIME	RECEIVED BY (SIGN)
RELINQUISHED BY (SIGN)	DATE TIME	RECEIVED BY (SIGN)
RELINQUISHED BY (SIGN)	DATE TIME	RECEIVED BY LAB

REMARKS: 2 samples in 2-16 oz jars & 2-VOA jars + 1 FB in 2 vials

PA 547
6-90

THE PORT AUTHORITY OF NY & NJ

Engineering Department
Construction Division
Materials Engineering Section

BORING REPORT

BH-124-4/MW-3 | SHEET 1 OF 4

PROJECT	NAME OF CONTRACTOR	BORING NO.	SURFACE ELEV.
JFK- Bldg 124	Craig	~~MW-124-3~~	

LOCATION	CONTRACT NO.	DATE
Laid out as per drawing ± 60' N.E of Bldg 124	426-99-006	12/13/99

SPOON	CASING SIZE	HOLE TYPE
3 "O.D. 2 3/8 "I.D.	Augers	Amonitor

HAMMER	HAMMER
140 # FALL 30 "	# FALL "

DRILLER: S. Burns

INSPECTOR: T. Ryan

GROUND WATER LEVEL

Date	Time	Depth	Remarks
12/13/99	Am	9.0'	In S-5

CASING BLOWS/FT.	DEPTH	SPOON BLOWS/6"	RE-COV'D[1]	SAMP.[2] NO.	[3]SAMPLE DESCRIPTION AND REMARKS LINE LOCATES CHANGE OF PROFILE
	0				ASPHALT 0.1'
		Hand Auger	Tot Rec	1	Fill - Br C-F Sand, some Gr; little Cobbles, tr Silt
				2	Same
	5			3	Same
Augers		5-6		4	Fill - Br M-F Sand, tr Silt, tr Gr.
		7-8	20"		
		5-7		5	Same
	10	6-7	19"		
		13-15		6	Same
		17-18	15"		
		12-16		7	Same
		16-19	17"		14.0'
	15				Bottom of Boring

Note: Sample #1 & 5 were saved for testing. A dup. of S-1 was also taken. All other samples were screened w/ PID & then discarded.

NOTES: 1 — Length recovered; 0" — Loss of Sample, T — Trap used
2 — U = undisturbed; A = auger; OER = open end rod; V = vane
3 — Log depth of change in color of wash water, loss of water, artesian water, sand heave in casing, etc.

PORT AUTHORITY OF NY & NJ

Engineering Department - Materials Division

Installation Report

Sheet 2 of 4

PROJECT				CONTRACT NO.
JFK - Bldg 124				426-99-006
LOCATION: Laid out as per drawing ± 60' N.E. of Bldg 124				CONTRACTOR: Craig
WELL NO.: MW-124-3	WELL TYPE: A' monitor	INSPECTOR: T. Ryan	DRILLER: S. Burns	DATE: 12/13/99

Well Development Report

(NOTE: WATER LEVEL READINGS FROM TOP OF PVC)

DATE			
12/13/99	WATER LEVEL BEFORE 9.1'	WATER LEVEL AFTER 9.1'	TAKEN 15 MINUTES AFTER

L1 = .3'

L2 = 3.7'

L3 = 10.0'

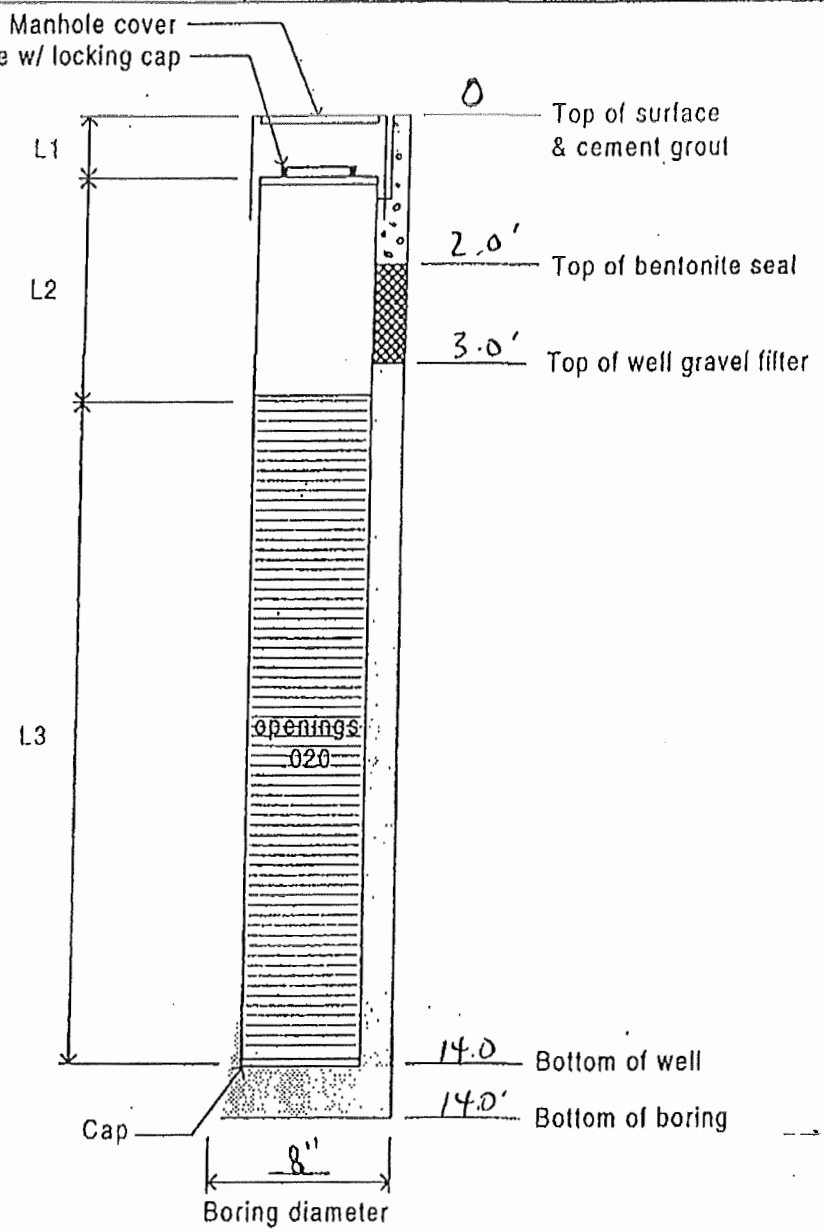

REMARKS:

ENGINEERING DEPARTMENT
MATERIALS ENGINEERING DIVISION
PID READINGS

PROJECT: JFK-Bldg 124

BORING No. MW-124-3 DATE: 12/13/99

FIELD READINGS BY: T. Ryan PID Model: 7

TIME	SAMPLE No.	IN-SITU Split Spoon Reading	HEAD-Space Reading	BREATHING Zone Reading	REMARKS
AM	1		0		
	2		0		
	3		0		
	4		0		
	5		0		
	6		0		
	7		0		

THE PORT AUTHORITY OF N.Y & N.J.

ENGINEERING DEPARTMENT
MATERIALS ENGINEERING DIVISION
CHAIN OF CUSTODY RECORD

PROJECT: JFK- Bldg 124

LOCATION: Laid out as per drawing ± 60' N.E. of Bldg 124 | DATE: 12/13/99

BORING No: MW-124-3 | TOTAL No. OF SAMPLES: 2 + 1 Dup

SIGNATURE OF ALL PRESENT AT SAMPLING: T. Ryan

RELINQUISHED BY (SIGN) T. Ryan	DATE 12/13/99 TIME	RECEIVED BY (SIGN)
RELINQUISHED BY (SIGN)	DATE TIME	RECEIVED BY (SIGN)
RELINQUISHED BY (SIGN)	DATE TIME	RECEIVED BY LAB

REMARKS: 2 samples in 2-16oz jars & 2-Voa jars + 1 Dup in 1-16 oz jar & 1-Voa jar.

PA 547
6-90

THE PORT AUTHORITY OF NY & NJ

Engineering Department
Construction Division
Materials Engineering Section

BORING REPORT

BH-124-8/MW-4 | SHEET 1 OF 4

PROJECT: JFK - Bldg 124	NAME OF CONTRACTOR: Craig	BORING NO.: ~~MW-124-4~~	SURFACE ELEV.:
LOCATION: Laid out as per drawing East of Bldg 124		CONTRACT NO.: 426-99-006	DATE: 12/15/99

SPOON	CASING SIZE	HOLE TYPE
3 O.D. 2 3/8 I.D.	Augers	Monitor

HAMMER	HAMMER
140 # FALL 30	# FALL

DRILLER: S. Burns

INSPECTOR: T Ryan

GROUND WATER LEVEL

Date	Time	Depth	Remarks
12/15/99	PM	9.0'	In S-5

CASING BLOWS/FT.	DEPTH	SPOON BLOWS/6"	RE-COV'D[1]	SAMP.[2] NO.	[3]SAMPLE DESCRIPTION AND REMARKS — LINE LOCATES CHANGE OF PROFILE
Cutter Head	0				~~Asphalt~~ 0.1' ~~Gravel~~ 0.5'
		Hand Auger	Full Rec	1	Fill - Br M-F Sand, tr Silt, tr Gr.
				2	Same
	5			3	Same
Augers		6-5		4	Same
		5-6	16"		
		4-5		5	Same
	10	6-5	19"		
		19-17		6	Same
		20-21	24"		
		20-22		7	Same
		18-17	22"		
	15				14.0' Bottom of Boring

Note: Sample # 1 & 5 were saved for testing. All other samples were screened w/ PID & then discarded.

NOTES: 1 — Length recovered; 0" — Loss of Sample, T — Trap used
2 — U = undisturbed; A = auger; OER = open end rod; V = vane
3 — Log depth of change in color of wash water, loss of water, artesian water, sand heave in casing, etc.

PORT AUTHORITY OF NY & NJ
Engineering Department - Materials Division

Well Installation Report

Sheet 2 of 4

PROJECT: JFK - Bldg 124				CONTRACT NO. 426-99-006
LOCATION: Laid out as per drawing East of Bldg 124				CONTRACTOR: Craig
WELL NO. 124-4	WELL TYPE: A monitor	INSPECTOR: T. Ryan	DRILLER: S. Burns	DATE: 12/15/99

Well Development Report (NOTE: WATER LEVEL READINGS FROM TOP OF PVC)

DATE: 12/15/99	WATER LEVEL BEFORE 8.9'	WATER LEVEL AFTER 9.3'	TAKEN 15 MINUTES AFTER

L1 = 1.3'

L2 = 3.7'

L3 = 10.0'

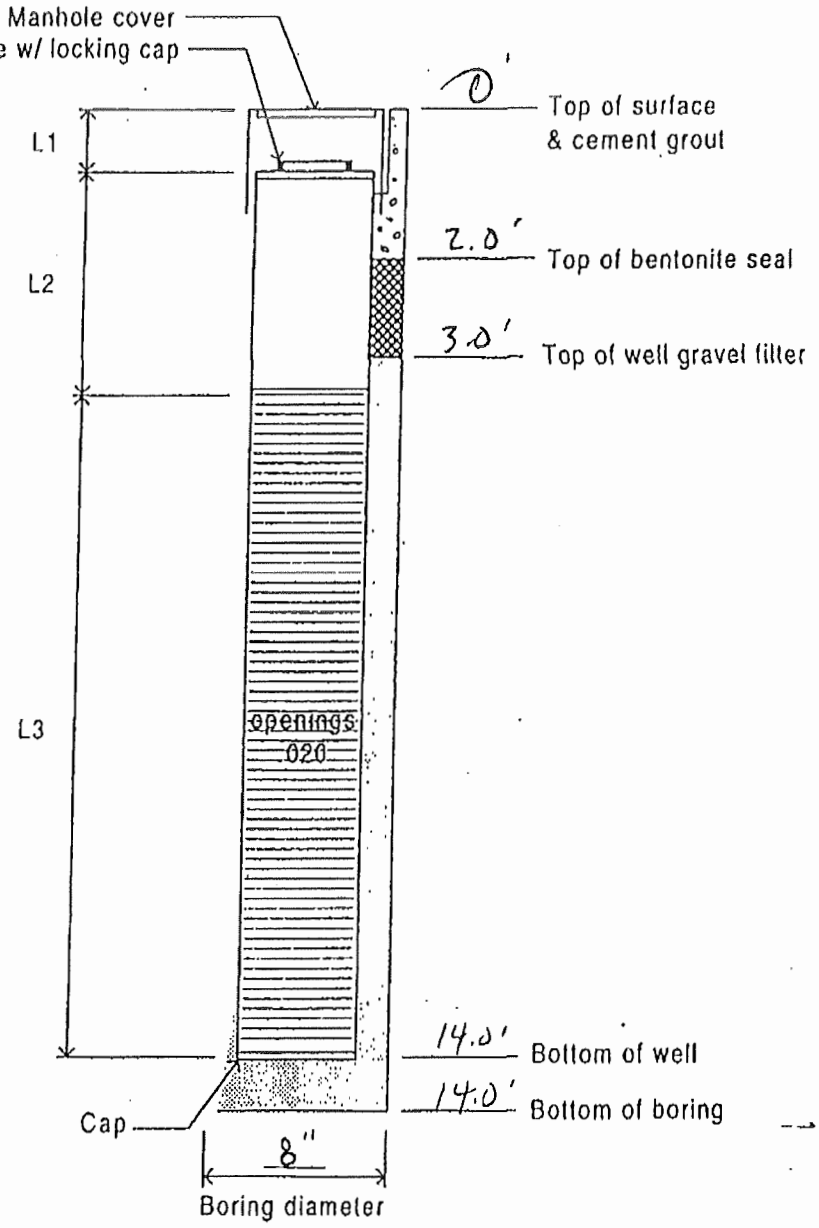

Wells:

ENGINEERING DEPARTMENT
MATERIALS ENGINEERING DIVISION
PID READINGS

PROJECT: JFK - Bldg 124

BORING No. MW-124-4 DATE: 12/15/99

FIELD READINGS BY: T. Ryan PID Model: 7

TIME	SAMPLE No.	IN-SITU Split Spoon Reading	HEAD-Space Reading	BREATHING Zone Reading	REMARKS
PM	1.		0		
	2		0		
	3		0		
	4		0		
	5		0		
	6		0		
	7		0		

THE PORT AUTHORITY OF N.Y & N.J.

ENGINEERING DEPARTMENT
MATERIALS ENGINEERING DIVISION
CHAIN OF CUSTODY RECORD

Sheet 4 of 4

PROJECT: JFK-Bldg 124

LOCATION: Laid out as per drawing East of Bldg 124 | DATE: 12/15/99

BORING No: MW-124-4 | TOTAL No. OF SAMPLES: 2

SIGNATURE OF ALL PRESENT AT SAMPLING: T. Ryan

RELINQUISHED BY (SIGN)	T. Ryan	DATE 12/15/99 TIME	RECEIVED BY (SIGN)
RELINQUISHED BY (SIGN)		DATE TIME	RECEIVED BY (SIGN)
RELINQUISHED BY (SIGN)		DATE TIME	RECEIVED BY LAB

REMARKS: 2 samples in 2-16oz jars & 2-Voa jars

PA 547
6-90

THE PORT AUTHORITY OF NY & NJ

Engineering Department
Construction Division
Materials Engineering Section

BORING REPORT

BH-124-10/MW-5

SHEET 1 OF 4

PROJECT	NAME OF CONTRACTOR	BORING NO.	SURFACE ELEV.
JFK-Bldg 124	Cray	~~MW-124-5~~	
LOCATION		**CONTRACT NO.**	**DATE**
Laid out as per drawing (N.E. corner of site)		426-99-006	12/13/99

SPOON	CASING SIZE	HOLE TYPE
3 "O.D. 2 3/8 "I.D.	Augers	4" monitor

HAMMER	HAMMER
140 # FALL 30 "	# FALL "

DRILLER: S. Burns

INSPECTOR: T. Ryan

GROUND WATER LEVEL

Date	Time	Depth	Remarks
12/13/99	AM	9.5'	In S-5

CASING BLOWS/FT.	DEPTH	SPOON BLOWS/6"	RE-COV'D[1]	SAMP.[2] NO.	[3]SAMPLE DESCRIPTION AND REMARKS LINE LOCATES CHANGE OF PROFILE
	0				ASPHALT 0.1
		Hand auger	Full rec	1	Fill - Br M-F Sand, some Gr, tr Silt, tr Cobbles
				2	Fill - Br M-F Sand, tr Silt, tr Gr.
	5			3	Same
augers		6-10		4	Same
		16-12	22"		
		18-16		5	Same
		16-18	21"		
	10	16-15		6	Br C-F Sand, tr Silt, lit Gr.
		29-33	24"		
		20-23		7	Same
		28-32	23"		
	15	15-24		8	Same
		27-30	20"		
					16.0' Bottom of Boring

Note: Samples # 1 & 5 were saved for testing. All other samples were screened w/ PID & then discarded.

NOTES: 1 — Length recovered; 0" — Loss of Sample, T — Trap used
2 — U = undisturbed; A = auger; OER = open end rod; V = vane
3 — Log depth of change in color of wash water, loss of water, artesian water, sand heave in casing, etc.

PORT AUTHORITY OF NY & NJ
Engineering Department - Materials Division

Well Installation Report

Sheet 2 of 4

PROJECT				CONTRACT NO.
JFK-Bldg 124				426-99-006
LOCATION				CONTRACTOR
Laid out as per drawing (N.E. corner of site)				Craig
WELL NO.	WELL TYPE	INSPECTOR	DRILLER	DATE
MW-124-5	A'monitor	T. Ryan	S. Burns	12/13/99

Well Development Report (NOTE: WATER LEVEL READINGS FROM TOP OF PVC)

DATE	WATER LEVEL, BEFORE	WATER LEVEL AFTER	TAKEN MINUTES AFTER
12/13/99	9.6'	9.7'	15

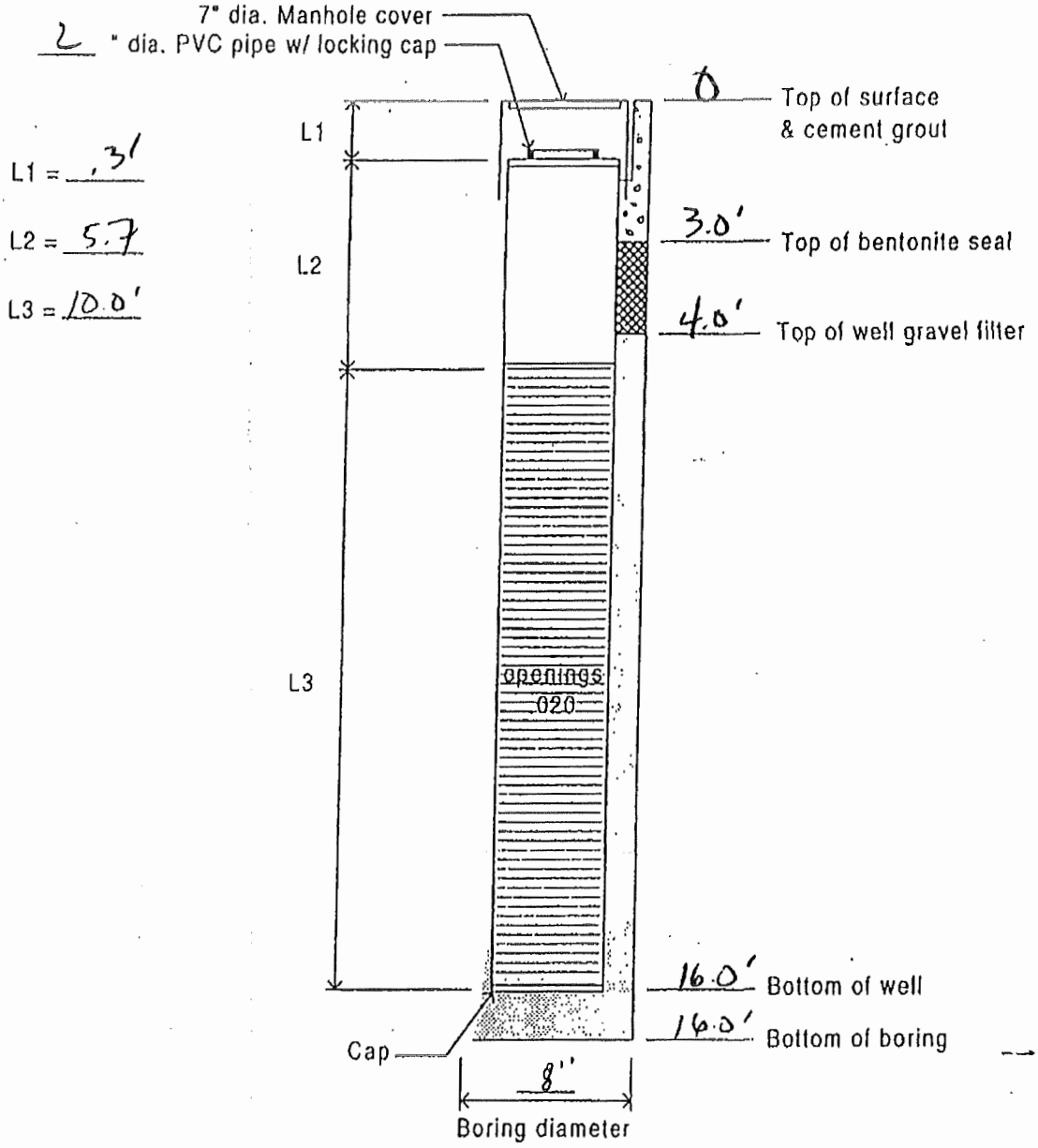

REMARKS:

ENGINEERING DEPARTMENT
MATERIALS ENGINEERING DIVISION
PID READINGS

PROJECT: JFK-Bldg 124

BORING No. MW-124-5 DATE: 12/13/99

FIELD READINGS BY: T. Ryan PID Model: 7

TIME	SAMPLE No.	IN-SITU Split Spoon Reading	HEAD-Space Reading	BREATHING Zone Reading	REMARKS
AM	1		0		
	2		0		
	3		0		
	4		0		
	5		0		
	6		0		
	7		0		
	8		0		

THE PORT AUTHORITY OF N.Y & N.J.

ENGINEERING DEPARTMENT
MATERIALS ENGINEERING DIVISION
CHAIN OF CUSTODY RECORD

Sheet 4 of 4

PROJECT: JFK - Bldg 124

LOCATION: Laid out as per drawing. | DATE: 12/13/99

BORING No: MW-124-5 | TOTAL No. OF SAMPLES: 2

SIGNATURE OF ALL PRESENT AT SAMPLING: T. Ryan

RELINQUISHED BY (SIGN) T. Ryan	DATE 12/13/99 TIME	RECEIVED BY (SIGN)
RELINQUISHED BY (SIGN)	DATE TIME	RECEIVED BY (SIGN)
RELINQUISHED BY (SIGN)	DATE TIME	RECEIVED BY LAB

REMARKS: 2 sample in 2-16 oz jar & 2-Voa jar + 1 FB in 2 vials

PA 547
6-90

THE PORT AUTHORITY OF NY & NJ

Engineering Department
Construction Division
Materials Engineering Section

BORING REPORT

SHEET 1 OF 3

PROJECT	NAME OF CONTRACTOR	BORING NO.	SURFACE ELEV.
JFK - Bldg 124	Craig	BH-124-9	
LOCATION		**CONTRACT NO.**	**DATE**
Laid out as per drawing South end of Park lot		426-99-006	12/16/99

SPOON	CASING SIZE	HOLE TYPE
3 "O.D. 2 3/8 "I.D.	Augers	I

HAMMER	HAMMER
140 # FALL 30 "	# FALL "

DRILLER: S Burns

INSPECTOR: T. Ryan

GROUND WATER LEVEL

Date	Time	Depth	Remarks
12/16/99	AM	9.0'	In S-5

CASING BLOWS/FT.	DEPTH	SPOON BLOWS/6"	RE-COV'D [1]	SAMP. NO. [2]	[3] SAMPLE DESCRIPTION AND REMARKS LINE LOCATES CHANGE OF PROFILE	
Cutter head	0				ASPHALT	0.1'
		Hand	Full		GRAVEL	1.0'
		auger	Rec	1	Fill - Br M-F Sand, lit Gr, lit Cobbles, tr Silt	
				2	Same	
	5			3	Same	
Auger		12-14		4	Fill - Br M-F Sand, tr Silt, tr Gr.	
		17-20	17"			
		8-7		5	Same	
	10	5-6	16"			10.0'
					Bottom of Boring	
	15					
					Note: Samples #1 & 5 were saved for testing. All other samples were screened w/ PID & then discarded.	

NOTES: 1 — Length recovered; 0" — Loss of Sample, T — Trap used
2 — U = undisturbed; A = auger; OER = open end rod; V = vane
3 — Log depth of change in color of wash water, loss of water, artesian water, sand heave in casing, etc.

ENGINEERING DEPARTMENT
MATERIALS ENGINEERING DIVISION
PID READINGS

Sheet 2 of 3

PROJECT: JFIR - Bldg 124

BORING No. BH-124-9 DATE: 12/16/99

FIELD READINGS BY: T. Ryan PID Model: 7

TIME	SAMPLE No.	IN-SITU Split Spoon Reading	HEAD-Space Reading	BREATHING Zone Reading	REMARKS
AM	1		0		
	2		0		
	3		0		
	4		0		
	5		0		

THE PORT AUTHORITY OF N.Y & N.J.

ENGINEERING DEPARTMENT
MATERIALS ENGINEERING DIVISION
CHAIN OF CUSTODY RECORD

Sheet 3 of 3

PROJECT: JFK - Bldg 124

LOCATION: Laid out as per drawing east end of lot | DATE: 12/16/99

BORING No: BH-124-9 | TOTAL No. OF SAMPLES: 2

SIGNATURE OF ALL PRESENT AT SAMPLING: T. Ryan

RELINQUISHED BY (SIGN) T. Ryan	DATE 12/16/99 TIME	RECEIVED BY (SIGN)
RELINQUISHED BY (SIGN)	DATE TIME	RECEIVED BY (SIGN)
RELINQUISHED BY (SIGN)	DATE TIME	RECEIVED BY LAB

REMARKS: 2 samples in 2-16oz jars & 2-Voa jars

PA 547
6-90

THE PORT AUTHORITY OF NY & NJ

Engineering Department
Construction Division
Materials Engineering Section

BORING REPORT

SHEET 1 OF 3

PROJECT	NAME OF CONTRACTOR	BORING NO.	SURFACE ELEV.
JFK - Bldg 124	Craig	BH-124-7	
LOCATION: Laid out as per drawing East side of Park lot.		CONTRACT NO. 426-99-006	DATE 12/16/99

SPOON	CASING SIZE	HOLE TYPE
3 "O.D. 2 3/8 "I.D.	Augers	I

HAMMER	HAMMER
140 # FALL 30 "	# FALL "

DRILLER: S. Burns

INSPECTOR: T Ryan

GROUND WATER LEVEL

Date	Time	Depth	Remarks
12/16/99	PM	9.0'	In S-5

CASING BLOWS/FT.	DEPTH	SPOON BLOWS/6"	RE-COV'D [1]	SAMP. NO. [2]	[3] SAMPLE DESCRIPTION AND REMARKS LINE LOCATES CHANGE OF PROFILE
Cutter Head	0				ASPHALT 0.1'
		Hand Augers	Full Rec	1	GRAVEL 1.0' Fill - Br M-f Sand, lit Gr, lit Cobbles, + Boulders.
				2	Same
	5			3	Same
Augers		4-5		4	Same
		9-15	20"		
		15-15		5	Same
	10	17-18	16"		10.0' Bottom of Boring
	15				

Note: Samples # 1 & 5 were saved for testing, all other samples were screened w/ PID & then discarded.

NOTES: 1 — Length recovered; 0" — Loss of Sample, T — Trap used
2 — U = undisturbed; A = auger; OER = open end rod; V = vane
3 — Log depth of change in color of wash water, loss of water, artesian water, sand heave in casing, etc.

ENGINEERING DEPARTMENT
MATERIALS ENGINEERING DIVISION
PID READINGS

PROJECT: JFK-Bldg 124

BORING No. B4-124-7 DATE: 12/16/99

FIELD READINGS BY: T. Ryan PID Model: 7

TIME	SAMPLE No.	IN-SITU Split Spoon Reading	HEAD-Space Reading	BREATHING Zone Reading	REMARKS
AM	1		0		
	2		0		
	3		0		
	4		0		
	5		0		

THE PORT AUTHORITY OF N.Y & N.J.

ENGINEERING DEPARTMENT
MATERIALS ENGINEERING DIVISION
CHAIN OF CUSTODY RECORD

Sheet 3 of 3

PROJECT: JFK-Bldg 124

LOCATION: Laid out as per drawing | DATE: 12/16/99

BORING No: B/H-124-7 | TOTAL No. OF SAMPLES: 2 + FB

SIGNATURE OF ALL PRESENT AT SAMPLING: T. Ryan

RELINQUISHED BY (SIGN) T. Ryan	DATE 12/16/99 TIME	RECEIVED BY (SIGN)
RELINQUISHED BY (SIGN)	DATE TIME	RECEIVED BY (SIGN)
RELINQUISHED BY (SIGN)	DATE TIME	RECEIVED BY LAB

REMARKS: 2 samples in 2-16 oz jars & 2-Voa jars + 1 F.B. in 2-Vials

PA 547
6-90

THE PORT AUTHORITY OF NY & NJ

Engineering Department
Construction Division
Materials Engineering Section

BORING REPORT

SHEET 1 OF 1

PROJECT: JFK - Bldg 124	NAME OF CONTRACTOR: Craig	BORING NO.: BH-124-6	SURFACE ELEV.:
LOCATION: Laid out as per drawing		CONTRACT NO.: 426-99-006	DATE: 12/15/99

SPOON	CASING SIZE	HOLE TYPE
"O.D. "I.D.		1
HAMMER # FALL "	HAMMER # FALL "	

DRILLER: S. Burns

INSPECTOR: T. Ryan

GROUND WATER LEVEL

Date	Time	Depth	Remarks
12/15/99	PM		No water encountered

CASING BLOWS/FT.	DEPTH	SPOON BLOWS/6"	RE-COV'D[1]	SAMP.[2] NO.	[3]SAMPLE DESCRIPTION AND REMARKS LINE LOCATES CHANGE OF PROFILE	
Cutter Head	0				~~ASPHALT~~	0.2'
		Hand	Full		GRAVEL	1.0'
		auger	Rec	1	Fill - Br M-F Sand, some Gr., little Cobbles, tr Conc, tr Brick.	
		↓	↓	2	Same	3.0'
	5				Hit Conc Obst. Bottom of Boring	
					See BH-124-6A	
					Note: No samples taken.	

NOTES: 1 — Length recovered; 0" — Loss of Sample, T — Trap used
2 — U = undisturbed; A = auger; OER = open end rod; V = vane
3 — Log depth of change in color of wash water, loss of water, artesian water, sand heave in casing, etc.

PA 547
6-90

THE PORT AUTHORITY OF NY & NJ

Engineering Department
Construction Division
Materials Engineering Section

BORING REPORT

SHEET 1 OF 3

PROJECT	NAME OF CONTRACTOR	BORING NO.	SURFACE ELEV.
JFK - Bldg 124	Craig	BH-124-6A	
LOCATION		**CONTRACT NO.**	**DATE**
Laid out as per drawing center of Park lot ± 5' NE of BH-124-6		426-99-006	12/15/99

SPOON	CASING SIZE	HOLE TYPE
3 "O.D. 2 3/8 "I.D.	Augers	1

HAMMER	HAMMER
140 # FALL 30 "	# FALL "

DRILLER: S. Burns

INSPECTOR: T. Ryan

GROUND WATER LEVEL

Date	Time	Depth	Remarks
12/15/99	PM	9.0'	See S-5

CASING BLOWS/FT.	DEPTH	SPOON BLOWS/6"	RE-COV'D	SAMP. NO.	SAMPLE DESCRIPTION AND REMARKS — LINE LOCATES CHANGE OF PROFILE
cutter Head	0				ASPHALT 0.2' GRAVEL 0.7'
		Hand auger	Full Rec	1	Fill - Br M-F Sand, lit Gr, tr Silt, tr Cobbles, tr Conc.
				2	Same w/ tr Boulders
	5			3	Fill - Br C-F Sand, lit Gr, tr Cobbles, tr Silt
augers		10-11		4	Fill - Br M-F Sand, tr Silt, tr Gr.
		8-7	16"		
		14-13		5	Same
	10	17-16	17"		10.0' Bottom of Boring

Note: Samples # 1 & 5 were saved for testing. All other samples were screened w/ PID & then discarded.

NOTES: 1 — Length recovered; 0" — Loss of Sample, T — Trap used
2 — U = undisturbed; A = auger; OER = open end rod; V = vane
3 — Log depth of change in color of wash water, loss of water, artesian water, sand heave in casing, etc.

ENGINEERING DEPARTMENT
MATERIALS ENGINEERING DIVISION
PID READINGS

PROJECT: JFK - Bldg 124

BORING No. BH-124-6A | DATE: 12/15/99

FIELD READINGS BY: T. Ryan | PID Model: 7

TIME	SAMPLE No.	IN-SITU Split Spoon Reading	HEAD-Space Reading	BREATHING Zone Reading	REMARKS
PM	1		0		
	2		0		
	3		0		
	4		0		
	5		0		

THE PORT AUTHORITY OF N.Y & N.J.

ENGINEERING DEPARTMENT
MATERIALS ENGINEERING DIVISION
CHAIN OF CUSTODY RECORD

Sheet 3 of 3

PROJECT: JFK - Bldg 124

LOCATION: Laid out as per drawing | DATE: 12/15/99

BORING No: BH-124-6A | TOTAL No. OF SAMPLES: 2

SIGNATURE OF ALL PRESENT AT SAMPLING: T. Ryan

RELINQUISHED BY (SIGN) T. Ryan	DATE 12/15/99 TIME	RECEIVED BY (SIGN)
RELINQUISHED BY (SIGN)	DATE TIME	RECEIVED BY (SIGN)
RELINQUISHED BY (SIGN)	DATE TIME	RECEIVED BY LAB

REMARKS: 2 samples in 2-16 oz jars & 2-Voa jars

PA 547
5-90

THE PORT AUTHORITY OF NY & NJ

Engineering Department
Construction Division
Materials Engineering Section

BORING REPORT

SHEET 1 OF 3

PROJECT	NAME OF CONTRACTOR	BORING NO.	SURFACE ELEV.
JFK-Bldg 124	Craig	BH-124-5	
LOCATION		**CONTRACT NO.**	**DATE**
Laid out as per drawing ±47' So of S.W. corner Bldg 124		426-99-006	12/16/99

SPOON	CASING SIZE	HOLE TYPE
3 "O.D. 2 7/8 "I.D.	Augers	I

HAMMER	HAMMER
140 # FALL 30 "	# FALL "

DRILLER: S. Burns

INSPECTOR: T. Ryan

GROUND WATER LEVEL

Date	Time	Depth	Remarks
12/16/99	AM	9.0'	In S-5

CASING BLOWS/FT.	DEPTH	SPOON BLOWS/6"	RE-COV'D	SAMP.[2] NO.	[3]SAMPLE DESCRIPTION AND REMARKS — LINE LOCATES CHANGE OF PROFILE	
cutter head	0				ASPHALT	0.1'
		Hand	Full		GRAVEL	1.0'
		Auger	Rec	1	Fill: Brn M-F Sand, tr Silt, lit Gr.	
				2	Same	
	5			3	Same	
ers		12-13		4	Same	
		15-16	16"			
		5-4		5	Same	
	10	6-5	18"			10.0
					Bottom of Boring	
	15					

Note: Sample # 1 & 5 were saved for testing. All other samples were screened w/ PID & then discarded.

NOTES: 1 — Length recovered; 0" — Loss of Sample, T — Trap used
2 — U = undisturbed; A = auger; OER = open end rod; V = vane
3 — Log depth of change in color of wash water, loss of water, artesian water, sand heave in casing, etc.

ENGINEERING DEPARTMENT
MATERIALS ENGINEERING DIVISION
PID READINGS

PROJECT: JFK-Bldg 124

BORING No. 124-5 DATE: 12/16/99

FIELD READINGS BY: T. Ryan PID Model: 7

TIME	SAMPLE No.	IN-SITU Split Spoon Reading	HEAD-Space Reading	BREATHING Zone Reading	REMARKS
AM	1		0		
	2		0		
	3		0		
	4		0		
	5		0		

THE PORT AUTHORITY OF N.Y & N.J.

ENGINEERING DEPARTMENT
MATERIALS ENGINEERING DIVISION
CHAIN OF CUSTODY RECORD

Sheet 3 of 3

PROJECT: JFK-Bldg 124

LOCATION: Laid out as per drawing | DATE: 12/16/99

BORING No: 124-5 | TOTAL No. OF SAMPLES: 2

SIGNATURE OF ALL PRESENT AT SAMPLING: T. Ryan

RELINQUISHED BY (SIGN) T. Ryan	DATE 12/16/99 TIME	RECEIVED BY (SIGN)
RELINQUISHED BY (SIGN)	DATE TIME	RECEIVED BY (SIGN)
RELINQUISHED BY (SIGN)	DATE TIME	RECEIVED BY LAB

REMARKS: 2 samples in 2-16oz jars & 2-Voa jars

PA 547
0-90

THE PORT AUTHORITY OF NY & NJ

Engineering Department
Construction Division
Materials Engineering Section

BORING REPORT

SHEET 1 OF 3

PROJECT: JFK - Bldg 124	NAME OF CONTRACTOR: Cray	BORING NO.: BH-124-3	SURFACE ELEV.:
LOCATION: Laid out as per drawing ± 45' NO of MW-124-3		CONTRACT NO.: 426-99-006	DATE: 12/13/99

SPOON: 3 "O.D. 2 3/8 "I.D.	CASING SIZE: Augers	HOLE TYPE: I	
HAMMER: 140 # FALL 30 "	HAMMER: # FALL "		
DRILLER: S. Burns			
INSPECTOR: T. Ryan			

GROUND WATER LEVEL

Date	Time	Depth	Remarks
12/13/99	PM	9.5'	In S-5

CASING BLOWS/FT.	DEPTH	SPOON BLOWS/6"	RE-COV'D[1]	SAMP.[2] NO.	[3]SAMPLE DESCRIPTION AND REMARKS LINE LOCATES CHANGE OF PROFILE
	0				ASPHALT 0.1'
		Hand auger	Full Rec	1	Fill - Br M-F Sand, some Gr, little Cobbles, tr Silt
				2	Same
	5			3	Same
Augers		6-8			
		13-17	22"	4	Same
		18-26		5	Br C-F Sand, little Gr, tr Silt
	10	33-40	18"		10.0' Bottom of Boring
	15				
					Note: Samples #1 & 5 were saved for testing. All other samples were screened w/ PID & then discarded.

NOTES: 1 — Length recovered; 0" — Loss of Sample, T — Trap used
2 — U = undisturbed; A = auger; OER = open end rod; V = vane
3 — Log depth of change in color of wash water, loss of water, artesian water, sand heave in casing, etc.

THE PORT AUTHORITY OF N.Y. & N.J.

ENGINEERING DEPARTMENT
MATERIALS ENGINEERING DIVISION
PID READINGS

Sheet 2 of 3

PROJECT: JFK- Bldg 124

BORING No. BH- 124-3 | DATE: 12/13/99

FIELD READINGS BY: T. Ryan | PID Model: 7

TIME	SAMPLE No.	IN-SITU Split Spoon Reading	HEAD-Space Reading	BREATHING Zone Reading	REMARKS
PM	1		0		
	2		0		
	3		0		
	4		0		
	5		0		

THE PORT AUTHORITY OF N.Y & N.J.

ENGINEERING DEPARTMENT
MATERIALS ENGINEERING DIVISION
CHAIN OF CUSTODY RECORD

Sheet 3 of 3

PROJECT: JFK- Bldg 124

LOCATION: Laid out as per drawing ±45' NO of MW 124-3 | DATE: 12/13/99

BORING No: BH-124-3 | TOTAL No. OF SAMPLES: 2

SIGNATURE OF ALL PRESENT AT SAMPLING: T. Ryan

RELINQUISHED BY (SIGN) T. Ryan	DATE 12/13/99 TIME	RECEIVED BY (SIGN)
RELINQUISHED BY (SIGN)	DATE TIME	RECEIVED BY (SIGN)
RELINQUISHED BY (SIGN)	DATE TIME	RECEIVED BY LAB

REMARKS: 2 samples in 2-16 oz jars & 2-VOA jars

APPENDIX B

Well Purging and Field Sampling Results

JFK - Bldg 124 DTP:DTW Results
AO3-992.025

MONITORING PERIOD:				Round 1		Monday, December 22, 1999
Area:		JFK - Building 124				
Time (a.m.)	Location	Depth of Well (ft)	Depth to Product (ft)	Depth to Water (ft)	Difference (ft)	Notes
9:44	MW-124-1	13.9		9.30		
9:50	MW-124-2	13.77		8.32		
9:51	MW-124-3	13.48		8.77		
9:53	MW-124-4	20.68		8.39		
9:55	MW-124-5	20.75		8.90		

ENGINEERING DEPARTMENT
MATERIALS ENGINEERING DIVISION
MONITOR WELL DEVELOPMENT DATA SHEET

CT: RFK Bldg 124 Baseline JOB No.: A03 992.025
LL LOCATION:
ELLPOINT No.: MW-1 DATE: 12-22-99
CK-UP DISTANCE: feet CASING DIAMETER: 2 inches
TH OF WELL FROM TOP OF PIPE: 13.9 feet
ELLPOINT DEPTH:

	TIME	DISTANCE FROM TOP OF PIPE TO: WATER, feet	OIL, feet
BEFORE DEVELOPMENT	9.44	9.3	
AFTER DEVELOPMENT	10.53	9.44	

OLUME TO BE REMOVED:

DEPTH OF WELL		13.9	feet
DEPTH TO WATER		9.3	feet
DEPTH OF WATER COLUMN		4.6	feet
FACTOR *	X	0.618	liters / feet
VOLUME TO BE REMOVED		2.84	liters

WELL DEVELOPMENT:

UMBER OF VOLUMES	TIME	pH	TEMP. degrees C	CONDUCTIVITY umohs / cm	SALINITY 0 / 00
1	10:18	6.42	13.3	600	0.25
2	10:24	6.47	12.6	575	0.25
3	10:28	6.46	13.6	500	0.25
4					
5					

SIGNATURES OF ALL PERSONS PRESENT:
DP & RV

EMARKS:
Duplicate Taken

* FACTOR = 0.618 FOR 2 INCH DIAMETER WELL CASING
* FACTOR = 2.471 FOR 4 INCH DIAMETER WELL CASING

ENGINEERING DEPARTMENT
MATERIALS ENGINEERING DIVISION
MONITOR WELL DEVELOPMENT DATA SHEET

ECT: JFK Bldg 124 Baseline | JOB No.: A03 992 025
ELL LOCATION:
ELLPOINT No.: MW-3 | DATE: 12/22/99
ICK-UP DISTANCE: feet | CASING DIAMETER: 2" inches
PTH OF WELL FROM TOP OF PIPE: feet

ELLPOINT DEPTH:

	TIME	DISTANCE FROM TOP OF PIPE TO: WATER, feet	OIL, feet
BEFORE DEVELOPMENT	9:51	8.77	—
AFTER DEVELOPMENT	12:58	8.70	

OLUME TO BE REMOVED:

DEPTH OF WELL	13.80	feet
DEPTH TO WATER	8.77	feet
DEPTH OF WATER COLUMN		feet
FACTOR *	X	liters / feet
VOLUME TO BE REMOVED	3.10	liters

DEVELOPMENT:

IMBER OF OLUMES	TIME	pH	TEMP. degrees C	CONDUCTIVITY umohs / cm	SALINITY 0 / 00
1	12:40	6.20	14.9	350	0.50
2	12:45	6.16	15.9	350	0.54
3	12:48	6.16	16.2	350	0.50
4					
5					

GNATURES OF ALL PERSONS PRESENT:
DP & RV

ARKS:

ACTOR = 0.618 FOR 2 INCH DIAMETER WELL CASING
ACTOR = 2.471 FOR 4 INCH DIAMETER WELL CASING

ENGINEERING DEPARTMENT
MATERIALS ENGINEERING DIVISION
MONITOR WELL DEVELOPMENT DATA SHEET

ECT: JFK Bldg 124 Baseline | JOB No.: A03 992.025
ELL LOCATION:
VELLPOINT No.: MW-2 | DATE: 12-22-90
TICK-UP DISTANCE: feet | CASING DIAMETER: 2" inches
EPTH OF WELL FROM TOP OF PIPE: feet

WELLPOINT DEPTH:

	TIME	DISTANCE FROM TOP OF PIPE TO: WATER, feet	OIL, feet
BEFORE DEVELOPMENT		4.33	—
AFTER DEVELOPMENT	11:24	4.30	

OLUME TO BE REMOVED:

DEPTH OF WELL	13.77	feet
DEPTH TO WATER	5.33	feet
DEPTH OF WATER COLUMN	8.45	feet
FACTOR *	x 3.36	liters / feet
VOLUME TO BE REMOVED		liters

WELL DEVELOPMENT:

JMBER OF VOLUMES	TIME	pH	TEMP. degrees C	CONDUCTIVITY umohs / cm	SALINITY 0 / 00
1	11:02	6.70	14.3	390	0.25
2	11:12	6.68	15.8	390	0.25
3	11:15	6.71	16.1	390	0.15
4					
5					

IGNATURES OF ALL PERSONS PRESENT:
DP & RV

MARKS:

FACTOR = 0.618 FOR 2 INCH DIAMETER WELL CASING
FACTOR = 2.471 FOR 4 INCH DIAMETER WELL CASING

ENGINEERING DEPARTMENT
MATERIALS ENGINEERING DIVISION
MONITOR WELL DEVELOPMENT DATA SHEET

R[redacted]CT: JFK Bldg 124 Baseline | JOB No.: A03 992052
LL LOCATION:
LLPOINT No.: MW-4 | DATE: 12/9/99
ICK-UP DISTANCE: feet [redacted] CASING DIAMETER: 2" Inches
TH OF WELL FROM TOP OF PIPE: feet

ELLPOINT DEPTH:

	TIME	DISTANCE FROM TOP OF PIPE TO: WATER, feet	OIL, feet
BEFORE DEVELOPMENT		9.39	—
AFTER DEVELOPMENT	1:55	9.21	

LUME TO BE REMOVED:

DEPTH OF WELL		17.04	feet
DEPTH TO WATER		9.39	feet
DEPTH OF WATER COLUMN		7.65	feet
FACTOR *	X	.618	liters / feet
VOLUME TO BE REMOVED		2.9	liters

[redacted]DEVELOPMENT:

MBER OF VOLUMES	TIME	pH	TEMP. degrees C	CONDUCTIVITY umohs / cm	SALINITY 0 / 00
1	1:41	6.70	14.8	400	0.30
2	1:45	6.71	15.6	400	0.30
3	1:47	6.71	16.0	400	0.30
4					
5					

GNATURES OF ALL PERSONS PRESENT:
RD

IARKS:

[redacted]ACTOR = 0.618 FOR 2 INCH DIAMETER WELL CASING
FACTOR = 2.471 FOR 4 INCH DIAMETER WELL CASING

THE PORT AUTHORITY

ENGINEERING DEPARTMENT
MATERIALS ENGINEERING DIVISION
MONITOR WELL DEVELOPMENT DATA SHEET

OJECT: JFK Bldg 124 Baseline JOB No.: A03 992.025
ELL LOCATION:
ELLPOINT No.: MW-5 DATE: 12/22/99
CK-UP DISTANCE: feet CASING DIAMETER: 2" inches
EPTH OF WELL FROM TOP OF PIPE: feet

ELLPOINT DEPTH:

	TIME	DISTANCE FROM TOP OF PIPE TO: WATER, feet	OIL, feet
BEFORE DEVELOPMENT	9 55	8.9	—
AFTER DEVELOPMENT	11 36	8.9	

VOLUME TO BE REMOVED:

DEPTH OF WELL	15.21	feet
DEPTH TO WATER	8.90	feet
DEPTH OF WATER COLUMN	6.31	feet
FACTOR *	X .618	liters / feet
VOLUME TO BE REMOVED	3.9	liters

WELL DEVELOPMENT:

NUMBER OF VOLUMES	TIME	pH	TEMP. degrees C	CONDUCTIVITY umohs / cm	SALINITY 0 / 00
1	1:10	6.59	15.1	235	0
2	1:12	6.59	15.3	250	0.25
3	1:20	6.61	15.5	275	0.25
4					
5					

SIGNATURES OF ALL PERSONS PRESENT:
RA

REMARKS:

* FACTOR = 0.618 FOR 2 INCH DIAMETER WELL CASING
* FACTOR = 2.471 FOR 4 INCH DIAMETER WELL CASING

Environmental Engineering Unit
Aviation Design Division

John F. Kennedy International Airport Building 125

Environmental Subsurface Baseline Investigation

Final Report

November 1999

Engineering Department

THE PORT AUTHORITY OF NY & NJ

TABLE OF CONTENTS

EXECUTIVE SUMMARY 1

1.0 INTRODUCTION 2

1.1 Site Location and Description 2

1.2 Geological Background 2

1.3 Previous Investigations 3

1.4 Project Background 3

1.5 Objective of the Baseline Investigation 4

2.0 FIELD PROCEDURES AND SAMPLING METHODOLOGY 5

2.1 Soil Boring and Monitoring Well Installation 5

2.2 Sampling Methodology 6

2.2.1 Soils 6

2.2.2 Groundwater 6

3.0 INVESTIGATION RESULTS 8

3.1 Site Hydrogeology 8

3.2 Analytical Results 8

3.2.1 Soil Samples 8

3.2.2 Groundwater Samples 9

3.3 Analytical Results – May 1999 Groundwater Sampling Event 10

4.0 SUMMARY 12

TABLE OF CONTENTS (cont'd)

List of Figures

Figure 1 ..... Site Location Map
Figure 2 ..... Soil Boring and Monitoring Well Locations
Figure 3 ..... Groundwater Contour Map

List of Tables

Table 1 ..... Monitoring Well Installation Data Summary
Table 2 ..... Monitoring Well Gauging Summary and Groundwater Table Elevations
Table 3 ..... Soil Boring Testing Results Summary
Table 4 ..... Soil Samples Analysis Results Summary
Table 5 ..... Groundwater Samples Analysis Results Summary
Table 6 ..... Groundwater Samples Analysis Results Summary – May 1999 Sampling

List of Appendices

Appendix A ..... Survey Results, Soil Boring Logs, Well Construction Data
Appendix B ..... Well Purging and Field Sampling Results

EXECUTIVE SUMMARY

The Environmental Engineering Unit of the Port Authority of New York and New Jersey (Port Authority) has conducted a subsurface baseline investigation of the site encompassing Building 125 at John F. Kennedy International Airport (JFKIA). The investigation included drilling soil borings, installing monitoring wells and collecting soil and groundwater samples for laboratory analysis.

A total of seventeen soil borings were drilled in April 1998. Six borings were completed as permanent monitoring wells. Soil samples were analyzed for volatile organic compounds (VOCs), Semivolatile organic compounds (SVOCs), methyl-tertiary butyl ether (MTBE), poly-chlorinated biphenyls (PCBs), total petroleum hydrocarbons (TPHC), ethylene glycol, and metals from the Toxicity Characteristic Leaching Procedure (TCLP). Groundwater samples were analyzed for VOCs, MTBE, SVOCs, PCBs, TPHC and ethylene glycol.

Field observations and laboratory analysis from activities conducted in April and May 1998 indicated petroleum contamination near the location of the removed fuel oil underground storage tanks (USTs) and the removed gasoline USTs. Analysis of soil and groundwater samples indicated elevated levels of ethylbenzene, xylenes, MTBE, and naphthalene near the tank excavation locations. Fuel odor was noted in the soil borings near the removed gasoline USTs and the removed fuel oil UST.

In May 1999, groundwater samples were collected and analyzed to confirm the 1998 finding. The groundwater samples were analyzed for VOCs on the EPA Priority Pollutant plus 40 (PP+40) List including total xylenes, MTBE, tertiary butyl alcohol (TBA), SVOCs on the EPA PP+40 List, PCBs, ethylene glycol and propylene glycol. Analysis of groundwater samples collected in May 1999 indicated elevated levels of benzene, toluene, ethylbenzene, and xylenes (BTEX), naphthalene and MTBE in the samples collected from the location of the removed gasoline and fuel oil USTs. Free product was also detected in the monitoring well located near the removed fuel oil UST.

The complete laboratory reports for both sampling events are available under separate cover.

1.0 INTRODUCTION

This report summarizes the baseline investigation performed at the site encompassing Building 125 at JFKIA. The report includes a description of the site and its background, a discussion of the field activities and analytical results, and a summary of the investigation's finding.

1.1 Site Location and Description

The site investigated is located in the northern area of JFKIA on 147th Avenue between 147th and 148th Streets. It is bounded by Building 124 to the south; 148th Street and Building 110 to the east; 147th Avenue to the north; and 147th Street and Building 88 to the west. The building is a 19,400 square foot concrete block, brick and metal structure constructed in 1950. A small basement located on the northern side of the building was used as a boiler room. The building is accessed by two garage doors and a driveway located on the northern side of the building. The building consists of office spaces in the northern and northwestern areas of the building, and a storeroom on the southwestern area of the building. The remainder of the floor space was used for vehicle maintenance. A mezzanine is located above the offices on the northern side of the building.

The building is surrounded by concrete sidewalk on the northern, western and eastern perimeter of the building. An asphalt parking lot is located on the southern area of the site. The area is covered by grass beyond the concrete sidewalk on the northern and western sides of the building.

The property was leased to Ogden Aviation Food Services (Ogden). Ogden used the facility as a vehicle maintenance shop. The Green Bus Lines and Boeing Airlines also used the property for a vehicle repair garage.

Eight 550-gallon gasoline and diesel USTs located in the southern area of the site were removed in 1992. A 5,000 gallon UST located in the northeastern area beneath the structure adjacent to the boiler room was removed in 1997. Two 275 gallon above ground storage tanks (ASTs) located inside the building are used to store used oil and other vehicle fluids.

The closest residential area is Laurelton, Queens located approximately one-quarter mile to the north. The site location is depicted on Figure 1, the Site Location Map.

1.2 Geological Background

In general, the soils found beneath JFKIA consist of a top layer of fine to medium sand to a depth of approximately seven to ten feet below grade. This brown and gray sand originated from Jamaica Bay and was hydraulically placed prior to the development of the airport in the 1940's. Underlying the fill in most areas is a layer of relatively impermeable organic soils. This layer varies from two to seven feet in thickness and is

made up of intermittent layers of organic peat and gray organic silt and clays. This is the original marsh soil which covered most of JFKIA prior to airport development. Beneath the organic material is a stratum of glacial outwash. In areas where the organic layer exists, a perched water table can be found at approximately six feet below grade. In other areas, the groundwater is eight to ten feet below grade and generally flows south towards Jamaica Bay.

Beneath the Building 125 site, the organic peat layer does not exist. The soil is composed of fine to medium brown and gray sand that contains some gravel, cobbles, a trace amount of brick, and a trace amount of silt that exist from the surface to at least 13 feet below grade. The groundwater table is located five to seven feet below grade at the site. The direction of groundwater flow at the site is toward the south.

1.3 Previous Investigations

In April 1996, an environmental audit was performed at Building 125 as part of a facility-wide audit at JFKIA performed by Camp, Dresser & McKee (CDM) as one of the requirements of the Administrative Consent Order (ACO). The environmental audit was conducted to identify compliance issues with federal and state environmental laws and regulations in effect November 1995. The audit identified compliance issues for Petroleum Bulk Storage (PBS), Emergency Planning and Community Right to Know Act (EPCRA), Water Quality Management, and Air Emissions for Building 125.

The issues relating to PBS regulations at the time of the audit included:

- The tank registration for the fuel oil UST had expired.
- Daily product inventory of the tanks was not being conducted
- The above ground storage tanks (ASTs) were not equipped with level gauges
- The ASTs were not properly labeled
- The fuel oil UST had not been tight tested
- Inspection records for the ASTs were not documented

The issue relating to EPRCA was failure to submit hazardous chemicals inventory form was not submitted to the proper parties.

The issue relating to Water Quality Management was the uncertainty of the discharge point (sanitary or stormwater drainage system) of the floor drains and the oil/water separator in the building.

The issue relating to Air Emissions was the operation of an air contamination source (spray painting and welding fume exhaust systems) without a valid certificate.

Parsons Brinckerhoff assessed the general condition of Building 125 in 1997 and noted various deficiencies (mechanical, civil, structural, electrical and environmental) in the building. The environmental deficiencies relating to the subsurface were consistent with the audit findings.

1.4 Project Background

In February 1994, the Port Authority and the NYSDEC executed an Administrative Consent Order pertaining to petroleum storage and spills at JFKIA, identified in DEC File No. R2-35199102. In accordance with Section XVI of this agreement, the Port Authority prepared and submitted to the NYSDEC the ACO Schedule E detailing the investigative and remedial activities it will undertake to mitigate petroleum releases at the areas listed in Schedule B (Oil Spill "Notifications" at JFKIA Petroleum Bulk Storage Locations) that are under the control of the Port Authority. Building 125 is included in the Schedule E. The baseline investigation was not conducted as a requirement of the ACO. The results however, can be used in developing remedial activities for the site.

1.5 Objective of the Baseline Investigation

The baseline investigation establishes existing contaminant concentrations in the subsurface soils and groundwater and identifies any elevated levels of contaminants form past operations at or near the site. The results of the baseline investigation may be included in future lease negotiations.

2.0 FIELD PROCEDURES AND SAMPLING METHODOLOGY

Soil borings and monitoring wells were installed at the site to collect soil and groundwater samples. All work was performed in accordance with the Port Authority's "Field Standard Operating Procedures Manual" and in conformance with NYSDEC and U.S. EPA requirements. This section describes the procedures for soil borings and well installation and the methods employed during sampling activities.

2.1 Soil Borings and Monitoring Well Installation

Between April 1 and April 8, 1999, seventeen soil borings were drilled at the site. Eight borings were drilled outside the building and nine borings were drilled inside the building. Five borings outside the building and one boring inside the building were completed as permanent monitoring wells. The Port Authority identified proposed soil boring and monitoring well locations from field observations and utility drawings.

The soil borings and monitoring wells were located near the excavated tank locations and along the periphery of the building. The soil borings were drilled to collect soil samples to determine the condition of the soil and possible impact to the groundwater. The monitoring wells were installed to assess the groundwater conditions, and determine the direction of groundwater flow. The locations of the borings were finalized during field installation after field screening of obstructions and utility clearance. After installation, the soil boring and monitoring well locations were surveyed by a Port Authority Construction Engineering representative for elevations and location coordinates.

The boreholes were installed as per ASTM standard protocol using a drill rig equipped with 6-inch inside diameter (I.D.) hollow-stem augers. Before drilling each borehole, all downhole equipment was decontaminated to protect against cross-contamination. Monitoring wells were installed and developed according to Port Authority's guidelines for unconfined, unconsolidated monitoring well installation and development procedures. The wells are constructed of a 4-inch I.D., flush-joint, polyvinyl chloride (PVC) casing with a 0.020-inch machine slotted well screen and were installed so the screens intercept the groundwater table. All wells were finished with a flush-mounted curb box with an 8-inch diameter steel manhole cover set in concrete. All wellheads are equipped with locking caps.

All drilling and monitoring well installation was performed by Craig Drilling. A Port Authority Materials Engineering representative was present during all drilling activities to log soil lithology, note any visible signs of contamination, screen and collect soil samples, ensure that standard drilling and well installation protocols were followed, and complete Boring Logs and Well Installation Reports.

The soil boring and monitoring well locations are shown on Figure 2. Table 1 presents a summary of the soil boring and well installation data, including survey coordinates. Survey results, drilling logs and well construction data are presented in Appendix A.

2.2 Sampling Methodology

This section describes the field methods used to screen and collect soil samples from the boreholes and collect groundwater samples from the monitoring wells. For the soil samples collected in April 1998, sufficient volume of each sample was collected to allow for laboratory analysis of volatile organic compounds, semi-volatile organic compounds, ethylene glycol, pesticides, poly-chlorinated biphenyls (PCBs), total petroleum hydrocarbons (TPHC), and TCLP metals. For the groundwater samples collected in April and May 1998, sufficient volume of each sample was collected to allow for laboratory analysis of volatile organic compounds, semi-volatile organic compounds, ethylene glycol, pesticides, poly-chlorinated biphenyls (PCBs), and total petroleum hydrocarbons (TPHC). For the samples collected in May 1999, sufficient volume of each sample was collected to allow for laboratory analysis of VOCs on the EPA Priority Pollutant plus 40 (PP+40) List including total xylenes, MTBE and tertiary-butyl alcohol (TBA), SVOCs on the EPA PP+40 List, ethylene glycol, propylene glycol and PCBs.

2.2.1 Soils

Soils from borings were sampled at two-foot intervals, from 18 inches below grade to a depth from 7 feet to 10 feet below grade, using a split-spoon sampler. Soils from borings completed as monitoring wells were sampled from 18 inches below grade to a depth 12 to 13 feet below grade except boring MW-BO-8, which was sampled from 6 feet below grade to 13 feet below grade. At each two-foot interval, the samples were placed in jars and screened for total ionizable vapors using an HNu Model photoionization detector (PID).

The sample exhibiting the highest PID reading in each borehole was submitted to a laboratory for chemical analysis. If no vapors were detected with a PID meter, the sample collected in the interval immediately above the groundwater table was analyzed. The soil boring reports in Appendix A indicate which soil samples from each borehole were submitted for laboratory analysis.

2.2.2 Groundwater

On April 28, 1998 and May 6, 1998, a Port Authority Materials Engineering representative gauged and sampled the six monitoring wells installed at the site. Monitoring well gauging was performed to determine the groundwater table elevation in the wells. Groundwater samples were collected for chemical analysis to determine the presence of dissolved contaminants.

A phase interface probe was used to gauge the depth to groundwater and to detect free product in the wells. The total well depth was also measured. The probe is accurate to within 0.01 feet. The measurements were taken relative to the surveyed top of casing elevation of each well. The probe was decontaminated before gauging each well. Table

2 summarizes the data generated by the well gauging activities, including groundwater table elevations.

After the gauging activity in April 1998, each well was purged and sampled with dedicated, disposable bailers. Three well casing volumes were purged before sampling. After each well volume was removed, pH, temperature, conductivity, and salinity were measured and recorded. These data are included in Appendix B on the monitoring well development data sheets.

On October 5, 1998, a second round of gauging was performed on the monitoring wells. The second round of gauging was performed to confirm the data collected during the April 1999 gauging and sampling event. The data collected during the second round of gauging is included in Appendix B. Table 2 summarizes the well gauging data including groundwater elevations.

During the second round of gauging, 1.84 feet of free product was detected in monitoring well MW-BI-4.

On May 7, 1999 and May 12, 1999, the five remaining monitoring wells were sampled and gauged using the same methodology as the April 1998 groundwater sampling event. The data collected during the second sampling event is included in Appendix B.

After gauging, the wells to be sampled were purged and sampled with dedicated, disposable bailers. Three to four well casing volumes were purged before sampling. After each well volume was removed, pH, temperature, conductivity, and salinity were measured and recorded. These data are included in Appendix B. Table 2 summarizes the well gauging data including groundwater elevations.

During the May 1999 gauging activities, a sheen was detected on the water from monitoring wells MW-BO-6 and MW-BI4.

The data collected from the April 1998 gauging event was used to generate the groundwater contour map presented on Figure 3.

3.0 INVESTIGATION RESULTS

This section discusses the findings of the baseline investigation performed at JFKIA's Building 125. Site hydrogeology is discussed and analytical results for soil and groundwater samples are presented and discussed.

3.1 Site Hydrogeology

The groundwater gradient for JFKIA is known to flow generally toward the south (toward Jamaica Bay). The groundwater table at the site is relatively flat, with the groundwater gradient ranging from 0.00008 foot per foot to 0.00066 foot per foot. The groundwater elevation across the site ranges from 6.57 feet to 6.76 feet and flows in a southwesterly direction towards Jamaica Bay. The groundwater contour map is shown in Figure 3.

3.2 Analytical Results – April and May 1998 Sampling Event

3.2.1 Soil Samples

During field screening of the soil samples with a PID, ionizable organic vapors were detected in five of the seventeen borings. High PID readings were detected in soil borings from MW-BO-6 and MW-BI-4. Relatively low PID readings or no PID readings were detected in the other soil borings. The PID readings are summarized on Table 3. The soil samples submitted for laboratory analysis are noted on the boring logs in Appendix A.

A total of 17 soil samples were collected during the investigation. The soil sample showing the highest PID reading was submitted for laboratory analysis. If no PID reading was detected, then the sample in the interval above the groundwater table was submitted for analysis.

The VOCs ethylbenzene, meta- and para-xylenes, and ortho-xylene were detected at elevated concentrations. Ethylbenzene was detected in two samples at 820 µg/kg and 5,200 µg/kg. Meta- and para-xylenes were detected in two samples at 690 µg/kg and 1,100 µg/kg. Ortho-xylene was detected in one sample at 15,000 µg/kg.

Other VOCs were detected at relatively low concentrations. Trichlorofluoromethane was detected in one sample at 4 µg/kg. The compound 1,1,1-trichloroethane was detected in one sample at 8 µg/kg. Toluene was detected in one sample at 2 µg/kg. Methyl-tert-butyl ether was detected in one sample at 3 µg/kg.

Methylene chloride was detected in all the samples ranging from 5 µg/kg to 410 µg/kg. Methylene chloride was also detected in the blank samples indicating that its presence may be due to laboratory contamination.

The SVOCs naphthalene and phenanthrene were detected at elevated concentrations. Naphthalene was detected in at 1,700 µg/kg in two samples. Phenanthrene was detected in two samples at 61 µg/kg and 1,600 µg/kg.

Other SVOCs, primarily PAHs, were detected at relatively low and moderate concentrations. Fluorene was detected in one sample at 830 µg/kg. Anthracene was detected in one sample at 220 µg/kg. Fluoranthene was detected in two samples at 46 µg/l and 120 µg/kg. Pyrene was detected in three samples at 41 µg/kg, 75 µg/kg, and 380 µg/kg. Butylbenzlphthalate as detected in one sample at 43 µg/kg. Benzo[a]fluoranthene was detected in one sample at 40 µg/kg.

The PCB Aroclor-1260 was detected in one soil sample at 43 µg/kg.

TPHC was detected in five soil samples ranging from 65 mg/kg to 11,000 mg/kg.

Ethylene glycol was detected in one soil sample at 990 mg/kg.

Barium was the only metal detected by TCLP analysis. Barium was detected in all the soil samples ranging from 1.5 mg/l to 3.2 mg/l.

The results of the soil sampling analysis are presented in Table 4.

3.2.2 Groundwater Samples

Six groundwater samples were collected during the investigation.

The VOCs ethylbenzene, meta- and para-xylenes, and methyl tert butyl ether were detected in at elevated concentrations. Ethylbenzene was detected in two samples at 20 µg/l and 1,800 µg/l. Meta- and para-xylenes were detected in two samples at 48 µg/l and 4,600 µg/l. Methyl-tert-butyl ether was detected in two samples at 15 µg/l and 250 µg/l.

Other VOCs were detected at relatively low or moderate levels. The compound 1,1,1-dichloroethane was detected in one sample at 6 µg/l. Chloroform was detected in one sample at 3 µg/. The compound 1,1,1-trichloroethene was detected in one sample at 10 µg/l. Benzene was detected in one sample at 4 µg/l. Toluene was detected in two samples at 13 µg/l and 20 µg/l. Ortho-xylene was detected in one sample at 56 µg/l.

Methylene chloride was detected four samples ranging from 1 µg/l to 43 µg/l. Methylene chloride was also detected in the blank samples indicating that its presence may be due to laboratory contamination.

The SVOC naphthalene was detected at an elevated concentration. Naphthalene was detected in one sample at 420 µg/l.

Other SVOCs, primarily PAHs, were detected at relatively low concentrations. Phenanthrene was detected in two samples at 4 µg/l and 6 µg/l. Fluoranthene was detected in one sample at 2 µg/l. Pyrene was detected in two samples at 1 µg/l and 2 µg/l. Bis(2-ethylhexyl)phthalate was detected in three samples ranging from 3 µg to 4 µg/l.

No PCBs were detected in any samples.

TPHC was detected in two groundwater samples at 15 µg/l and 33 µg/l.

Ethylene glycol was detected in two samples at 13 µg/l and 20 µg/l.

The results of the groundwater samples analysis are presented in Table 5.

3.3 Analytical Results – May 1999 Groundwater Sampling Event

Five groundwater samples were collected during the second sampling event.

The VOCs ethylbenzene, meta- and para-xylenes, 1,3,5-trimethylbenzene, 1,2,4-trimethylbenzene, and 1,2-dichlorobenzene were detected in at elevated concentrations. Ethylbenzene was detected in two samples at 43 µg/l and 1,500 µg/l. Meta- and para-xylenes were detected in two samples at 160 µg/l and 2,700 µg/l. The compound 1,3,5-trimethylbenzene was detected in two samples at 130 µg/l and 1,300 µg/l. The compound 1,2,4-trimethylbenzene was detected in two samples at 230 µg/l and 1,900 µg/l. Naphthalene was detected in two samples at 170 µg/l and 740 µg/l.

Other VOCs were detected at relatively low or moderate levels. Benzene was detected in one sample at 15 µg/l. Toluene was detected in one sample at 45 µg/l. The compound 1,1,2,2-tetrchloroethane was detected in one sample at 10 µg/l. Isopropylbenzene was detected in two samples at 22 µg/l and 190 µg/l. The compound n-propylbenzene was detected in two samples at 38 µg/l and 420 µg/l. The compound sec-butylbenzene was detected in two samples at 27 µg/l and 34 µg/l. The compound p-isopropyltoluene was detected in two samples at 57 µg/l and 110 µg/l. The compound 1,3-dichlorobenzene was detected in one sample at 1 µg/l. The compound 1,2-dichlorobenzene was detected in one sample at 23 µg/l. Ortho-xylene was detected in one sample at 99 µg/l. Methyl-tert-butyl ether was detected in two samples at 10 µg/l and 89 µg/l.

Methylene chloride was detected in all the samples ranging from 2 µg/l to 35 µg/l. Methylene chloride was also detected in the blank samples indicating that its presence may be due to laboratory contamination.

The SVOCs 2-methylnaphthalene and naphthalene were detected at an elevated concentration. The compound 2-methylnaphthalene was detected in two samples at 180 µg/l and 1,000 µg/l. Naphthalene was detected in two samples at 320 µg/l and 530 µg/l.

Other SVOCs, primarily PAHs, were detected at relatively low concentrations. Acenaphthene was detected in two samples at 1 µg/l and 130 µg/l. Bis(2-ethylhexyl)phthalate was detected in one sample at 1 µg/l. Dibenzofuran was detected in one sample at 61 µg/l. Fluoranthene was detected in one sample at 1 µg/l. Fluorene was detected in one sample at 260 µg/l. Phenanthrene was detected in two samples at 2 µg/l and 370 µg/l. Pyrene was detected in two samples at 2 µg/l and 46 µg/l.

No glycols were detected in the samples.

The results of the analysis of the groundwater samples collected in May 1999 are presented in Table 6.

4.0 SUMMARY

Based on the results of the laboratory analysis of the groundwater and soil samples collected during both phases of the baseline investigation, it appears that the site has been impacted by petroleum contamination.

Soil samples collected from the locations of the removed fuel oil and the removed gasoline USTs indicated elevated levels of ethylbenzene, xylenes, naphthalene and TPHC. Other contaminants were detected at low concentrations.

The groundwater sample collected in April and May 1998 from the location of the removed gasoline USTs indicated elevated levels of ethylbenzene, xylenes and naphthalene. The groundwater sample from the location of the removed fuel oil UST had slightly elevated levels of BTEX.

The groundwater samples collected in May 1999 from the locations of the removed gasoline USTs and the removed fuel oil UST had elevated levels of BTEX, MTBE, naphthalene and 2-methylnaphthalene.

FIGURES

TABLES

Table 1
John F. Kennedy International Airport
Building 125
Baseline Investigation
Soil Boring and Monitoring Well Installation Data Summary

Soil Boring/ Well Identification	Installation Date	Soil Boring/ Well Depth	Elevation	Survey Coordinates	
				South	East
MW-BO-1	4/1/98	12	13.24	51992	66074
MW-BO-2	4/1/98	12	13.58	51915	66098
BH-BO-3	4/1/98	10	13.30	51898	66158
MW-BO-4	4/1/98	12	13.49	51875	66239
BH-BO-5	4/6/98	7	13.56	51999	66279
MW-BO-6	4/6/98	13	13.60	52023	66202
BH-BO-7	4/2/98	7	13.75	52030	66152
MW-BO-8	4/8/98	13	14.06	52087	66079
BH-BI-1	4/8/98	7	13.64	51965	66101
BH-BI-2	4/7/98	7	13.65	51933	66160
BH-BI-3	4/7/98	7	13.68	51911	66223
MW-BI-4	4/7/98 and 4/9/98	13	13.69	51900	66265
BH-BI-5	4/7/98	7	13.81	51955	66281
BH-BI-6	4/7/98	7	13.70	51965	66239
BH-BI-7	4/7/98 and 4/8/98	7	13.57	51984	66175
BH-BI-8	4/8/98	7	13.67	52000	66111
BH-BI-9	4/8/98	7	13.61	51925	66272

Notes: 1. All measurements are in feet
2. Field measurements approximated to the nearest 0.5 foot

Table 2
John F. Kennedy International Airport
Building 125
Baseline Investigation
Monitoring Well Gauging Data Summary and Groundwater Table Elevations

Round 1

Well Identification	Date Gauged	Depth of Well	Depth to Water	Ground Elevation	Groundwater Elevation
MW-BO-1	4/28/98	11.80	6.58	13.24	6.66
MW-BO-2	4/28/98	11.81	6.93	13.58	6.65
MW-BO-4	4/28/98	11.81	6.73	13.49	6.76
MW-BO-6	4/28/98	12.75	6.88	13.60	6.72
MW-BO-8	4/28/98	12.92	7.49	14.06	6.57
MW-BI-4	5/6/98	12.72	6.94	13.69	6.75

Notes: 1. All measurements are in feet
2. Field measurements are approximated to the nearest 0.5 foot

Table 2
John F. Kennedy International Airport
Building 125
Baseline Investigation
Monitoring Well Gauging Data Summary and Groundwater Table Elevations

Round 2

Well Identification	Date Gauged	Depth of Well	Depth to Water	Depth to Product	Ground Elevation	Product Thickness	Groundwater Elevation
MW-BO-1	10/5/98	11.80	8.33		13.24		4.91
MW-BO-2	10/5/98	11.81	8.63		13.58		4.95
MW-BO-4	10/5/98	11.81	8.37		13.49		5.12
MW-BO-6	10/5/98	12.75	9.22		13.60		4.38
MW-BO-8	10/5/98	12.92	8.59		14.06		5.47
MW-BI-4	10/5/98	12.72	10.15	8.37	13.69	1.84	4.85

Notes: 1. All measurements are in feet
2. Field measurements are approximated to the nearest 0.5 foot
3. The presence of almost two feet of product is taken into account in the calculation of the groundwater elevation in well MW-BI-4

Table 2
John F. Kennedy International Airport
Building 125
Baseline Investigation
Monitoring Well Gauging Data Summary and Groundwater Table Elevations

Round 3

Well Identification	Date Gauged	Depth of Well	Depth to Water	Well Casing Elevation	Groundwater Elevation
MW-BO-1	---	---	---	---	---
MW-BO-2	5/12/99	11.78	8.30	13.58	5.28
MW-BO-4	5/7/99	11.83	8.11	13.49	5.38
MW-BO-6	5/7/99	12.76	8.33	13.60	5.27
MW-BO-8	5/7/99	12.07	8.93	14.06	5.13
MW-BI-4	5/7/99	12.70	8.30	13.69	5.39

Notes: 1. Well MW-BO-1 was not sampled; well was destroyed
2. All measurements are in feet
3. Field measurements are approximated to the nearest 0.5 foot

John F. Kennedy International Airport
Building 125
Baseline Investigation
Soil Boring Field Testing Results Summary
Soil Borings Drilled Outside the Building

Boring MW-BO-1
Sample submitted for analysis
Sample 1

Sample	*Depth (ft)*	*PID Reading*
1	4.5-5.5	
2	6-8	
3	8-10	
4	10-12	

Boring MW-BO-2
Sample submitted for analysis
Sample 1

Sample	*Depth (ft)*	*PID Reading*
1	5-5.5	
2	6-8	
3	8-10	
4	10-12	

Boring BO-3
Sample submitted for analysis
Sample 1

Sample	*Depth (ft)*	*PID Reading*
1	4.5-5	
2	6-8	
3	8-10	

Boring MW-BO-4
Sample submitted for analysis
Sample 1

Sample	*Depth (ft)*	*PID Reading*
1	5-6	
2	6-8	
3	8-10	
4	10-12	

Boring BO-5
Sample submitted for analysis
Sample 3

Sample	*Depth (ft)*	*PID Reading*
1	1-3	
2	3-5	
3	5-7	

Boring MW-BO-6
Sample submitted for analysis
Sample 3

Sample	*Depth (ft)*	*PID Reading*
1	1.5-3	
2	3-5	11.4
3	5-6	211.7
4	6-7	195.8
5	7-9	242.5
6	9-11	207.4
7	11-13	157.3

Boring BO-7
Sample submitted for analysis
Sample 3

Sample	*Depth (ft)*	*PID Reading*
1	1.4-3	
2	3-5	
3	5-6	
4	6-7	

Boring MW-BO-8
Sample submitted for analysis
Sample 1

Sample	*Depth (ft)*	*PID Reading*
1	6-7	
2	7-9	
3	9-11	
4	11-13	

All PID readings in ppm (parts per million)
Blank space indicates PID reading of zero

John F. Kennedy International Airport
Building 125
Baseline Investigation
Soil Boring Field Testing Results Summary
Soil Borings Drilled Inside the Building

Boring BI-1
Sample submitted for analysis
Sample 4

Sample	Depth (ft)	PID Reading
1	0.5-2	
2	2-4	
3	4-6	
4	6-7	

Boring BI-2
Sample submitted for analysis
Sample 4

Sample	Depth (ft)	PID Reading
1	1.5-3	
2	3-5	
3	5-6	
4	6-7	

Boring BI-3
Sample submitted for analysis
Sample 3

Sample	Depth (ft)	PID Reading
1	0.5-2	
2	2-4	0.8
3	4-6	1.4
4	6-7	

Boring MW-BI-4
Sample submitted for analysis
Sample 3

Sample	Depth (ft)	PID Reading
1	1-3	1.5
2	3-5	5.0
3	5-7	55.0
4	7-9	89.7
5	9-11	81.5
6	11-13	4.5

Boring BI-5
Sample submitted for analysis
Sample 4

Sample	Depth (ft)	PID Reading
1	0.5-2	0.4
2	2-4	0.4
3	4-6	
4	6-7	

Boring BI-6
Sample submitted for analysis
Sample 4

Sample	Depth (ft)	PID Reading
1	0.5-2	
2	2-4	
3	4-6	1.4
4	6-7	1.5

Boring BI-7
Sample submitted for analysis
Sample 4

Sample	Depth (ft)	PID Reading
1	0.5-2	
2	2-4	
3	4-6	
4	6-7	

Boring BI-8
Sample submitted for analysis
Sample 4

Sample	Depth (ft)	PID Reading
1	0.5-2	
2	2-4	
3	4-6	
4	6-7	

Boring BI-9
Sample submitted for analysis
Sample 4

Sample	Depth (ft)	PID Reading
1	0.5-2	
2	2-4	
3	4-6	
4	6-7	

All PID readings in ppm (parts per million)
Blank space indicates PID reading of zero

Table 4
John F. Kennedy International Airport
Building 125
Baseline Investigation
Soil Samples Analysis Results Summary

PA-NYNJ Sample ID	MW-BO-1, S-1	MW-BO-2, S-1	MW-BO-3, S-1	MW-BO-4, S-1	BO-5, S-3	MW-BO-6, S-3	BO-7, S-3	MW-BO-8, S-1
Laboratory ID	98-23921	98-23916	98-23917	98-23918	98-24850	98-24850	98-24851	98-23922
Sampling Date	4/2/1998	4/1/1998	4/1/1998	4/1/1998	4/6/1998	4/6/1998	4/6/1998	4/2/1998
Volatile Organic Compounds µg/kg								
Analyte								
Dilution Factor, if other than one						125		
Trichlorofluoromethane					4JH			
Methylene Chloride	8B	7B	6B	7B	7B	410JB	6JB	5JB
1,1,1-Trichloroethane								
Toluene								
Ethylbenzene						820		
Xylene (para & meta)						1100		
Xylene (ortho)								
Methyl tert butyl ether								
Semivolatile Organic Compounds µg/kg								
Analyte	U	U	U	U	U		U	
Dilution Factor, if other than one								
Naphthalene						1700		
Fluorene								
Phenanthrene								61J
Anthracene								
Fluoranthene								120J
Pyrene								75J
Butylbenzylphthalate								
Benzo[k]fluoranthene								

Blank space Analyte not detected
U Analytes not detected
J Estimated value, analyte concentration below PQL
B Analyte in blank
NA Not analyzed
Analyte not listed was tested for but not detected in any samples

Table 4
John F. Kennedy International Airport
Building 125
Baseline Investigation
Soil Samples Analysis Results Summary

PA-NYNJ Sample ID	BI-1, S-4	BI-2, S-4	BI-3, S-3	BI-4, S-3	BI-5, S-3	BI-6, S-4	BI-7, S-4	BI-8, S-4
Laboratory ID	98-26355	98-26336	98-26330	98-26331	98-26332	98-26333	98-26337	98-26338
Sampling Date	4/8/1998	4/8/1998	4/7/1998	4/7/1998	4/7/1998	4/7/1998	4/8/1998	4/8/1998
Volatile Organic Compounds µg/kg								
Analyte								
Dilution Factor, if other than one				125				
Trichlorofluoromethane								
Methylene Chloride	14B	13B	11B	360JB	8B	12B	12B	12
1,1,1-Trichloroethane								33
Toluene	2J							
Ethylbenzene				5200				
Xylene (para & meta)				690J				
Xylene (ortho)				15000				
Methyl tert butyl ether	3J							
Semivolatile Organic Compounds µg/kg								
Analyte	U		U		U	U	U	
Dilution Factor, if other than one								
Naphthalene				1200				
Fluorene				830				
Phenanthrene				1600				
Anthracene				220J				
Fluoranthene								46J
Pyrene				380				41J
Butylbenzylphthalate								
Benzo[k]fluoranthene		40J						

Blank space Analyte not detected
U Analytes not detected
J Estimated value, analyte concentration below PQL
B Analyte in blank
NA Not analyzed
Analyte not listed was tested for but not detected in any samples

Table 4
John F. Kennedy International Airport
Building 125
Baseline Investigation
Soil Samples Analysis Results Summary

PA-NYNJ Sample ID	BT-9.5-4	FB 4/1	FB 4/2	FB 4/6	FB 4/7	FB 4/8
Laboratory ID	98-26339	98-23919	98-23920	98-24652	98-26334	98-26340
Sampling Date	4/8/1998	4/1/1998	4/2/1998	4/6/1998	4/7/1998	4/8/1998
Volatile Organic Compounds µg/kg						
Analyte		U	U	U	U	
Dilution Factor, if other than one						
Trichlorofluoromethane						
Methylene Chloride	8					12JB
1,1,1-Trichloroethane						
Toluene						
Ethylbenzene						
Xylene (para & meta)						
Xylene (ortho)						
Methyl tert butyl ether						
Semivolatile Organic Compounds µg/kg						
Analyte		NA	NA	NA	NA	NA
Dilution Factor, if other than one						
Naphthalene						
Fluorene						
Phenanthrene						
Anthracene						
Fluoranthene						
Pyrene						
Butylbenzylphthalate	33J					
Benzo[k]fluoranthene						

Blank space Analyte not detected
U Analytes not detected
J Estimated value; analyte concentration below PQL
B Analyte in blank
NA Not analyzed
Analyte not listed was tested for but not detected in any samples

Table 4
John F. Kennedy International Airport
Building 125
Baseline Investigation
Soil Samples Analysis Results Summary

PA-NYNJ Sample ID	MW-BO-1, S-1	MW-BO-2, S-1	MW-BO-3, S-1	MW-BO-4, S-1	BO-5, S-3	MW-BO-6, S-3	BO-7, S-3	MW-BO-8, S-1
Laboratory ID	98-23921	98-23916	98-23917	98-23918	98-24850	98-24850	98-24851	98-23922
Sampling Date	4/2/1998	4/1/1998	4/1/1998	4/2/1998	4/6/1998	4/6/1998	4/6/1998	4/2/1998
PCB µg/kg								
Aroclor-1260								
TCLP Metals mg/l								
Barium	2	2	1.9	1.8	2.6	2.4	2.2	1.7
TPHC and Glycol mg/kg								
TPHC			84			240		
Ethylene Glycol								

Blank space Analyte not detected
U Analytes not detected
J Estimated value, analyte concentration below PQL
B Analyte in blank
NA Not analyzed
Analyte not listed was tested for but not detected in any samples

Table 4
John F. Kennedy International Airport
Building 125
Baseline Investigation
Soil Samples Analysis Results Summary

PA-NYNJ Sample ID	BI-1, S-4	BI-2, S-4	BI-3, S-3	BI-4, S-3	BI-5, S-4	BI-6, S-4	BI-7, S-4	BI-8, S-4
Laboratory ID	98-26335	98-26336	98-26330	98-26331	98-26332	98-26333	98-26337	98-26338
Sampling Date	4/8/1998	4/8/1998	4/7/1998	4/7/1998	4/7/1998	4/7/1998	4/8/1998	4/8/1998
PCB ug/kg								
Aroclor-1260						47		
TCLP Metals mg/l								
Barium	1.8	2.2	1.5	3.2	2.3	2	2.5	1.9
TPHC and Glycol mg/kg								
TPHC				11000				65
Ethylene Glycol				990				

Blank space Analyte not detected
U Analytes not detected
J Estimated value, analyte concentration below PQL
B Analyte in blank
NA Not analyzed
Analyte not listed was tested for but not detected in any samples

Table 4
John F. Kennedy International Airport
Building 125
Baseline Investigation
Soil Samples Analysis Results Summary

PA-NYNJ Sample ID	BI-9, S-4	FB 4/1	FB 4/2	FB 4/6	FB 4/7	FB 4/8
Laboratory ID	98-26339	98-23919	98-23920	98-24852	98-26334	98-26340
Sampling Date	4/8/1998	4/1/1998	4/2/1998	4/6/1998	4/7/1998	4/8/1998
PCB µg/kg						
Aroclor-1260						
TCLP Metals mg/l						
Barium	2.4					
TPHC and Glycol mg/kg						
TPHC	290					
Ethylene Glycol						

Blank space: Analyte not detected
U: Analytes not detected
J: Estimated value, analyte concentration below PQL
Ø: Analyte in blank
NA: Not analyzed
Analyte not listed was tested for but not detected in any samples

Table 5
John F. Kennedy International Airport
Building 125
Baseline Investigation
Groundwater Samples Analysis Results Summary

PA-NYNJ Sample ID	MW-BO-1	MW-BO-2	MW-BO-4	MW-BO-6	MW-BO-8	MW-B1-4
Laboratory ID	98-32811	98-32808	98-32807	98-32810	98-32809	98-36133
Sampling Date	4/28/1998	4/28/1998	4/28/1998	4/28/1998	4/28/1998	5/6/1998
Volatile Organic Compounds µg/l						
Analyte						
Dilution Factor, If other than one				20		
Methylene Chloride	11B		11B	43B		3B
1,1-Dichloroethane		6				4
Chloroform		3				
1,1,1-Trichloroethane		10				
Benzene						4
Toluene				20		13
Ethylbenzene				1800		20
Xylene (para & meta)				4000		48
Xylene (ortho)						56
Methyl tert butyl ether		300	250	200		15
Semi-volatile Organic Compounds µg/l						
Analyte	U		U			
Dilution Factor, If other than one						
Naphthalene				420		
Phenanthrene				4		6
Fluoranthene				2		
Pyrene				2		1J
Bis(2-ethylhexyl)phthalate		4		3	4	
TPHC and Glycol mg/l					U	
TPHC				33		15
Ethylene Glycol		13	20			

Blank space Analyte not detected
U Analytes not detected
J Estimated value; analyte concentration below PQL
B Analyte in blank
NA Not analyzed
Analyte not listed was tested for but not detected in any samples

Table 5
John F. Kennedy International Airport
Building 125
Baseline Investigation
Groundwater Samples Analysis Results Summary

PA-NYNJ Sample ID	Duplicate	FB 4/28	FB 5/6	FB 4/28	FB 5/6
Laboratory ID	98-32812	98-32813	98-36134	98-32814	98-36135
Sampling Date	4/28/1998	4/28/1998	5/6/1998	4/28/1998	5/6/1998
Volatile Organic Compounds µg/l					
Analyte					
Dilution Factor, if other than one					
Methylene Chloride	1		3B	1	4B
1,1-Dichloroethane					
Chloroform					
1,1,1-Trichloroethane					
Benzene					
Toluene					
Ethylbenzene					
Xylene (para & meta)					
Xylene (ortho)					
Methyl tert butyl ether	240				
Semivolatile Organic Compounds µg/l					
Analyte		U	U	NA	NA
Dilution Factor, if other than one					
Naphthalene					
Phenanthrene					
Fluoranthene					
Pyrene					
Bis(2-ethylhexyl)phthalate	3				
TPHC and Glycol mg/l	U	U	U	NA	NA
TPHC					
Ethylene Glycol					

Blank space Analyte not detected
U Analytes not detected
J Estimated value, analyte concentration below PQL
B Analyte in blank
NA Not analyzed
Analyte not listed was tested for but not detected in any samples

Table 6
John F. Kennedy International Airport
Building 125
Groundwater Samples Analysis Results Summary
May 1999 Sampling

PA-NYNJ Sample ID	MW-BO-1	MW-BO-2	MW-BO-4	MW-BO-6	MW-BO-6	MW-BO-8	MW-BI-4	MW-BI-4
Laboratory ID		9904839	9904655	9904656	9904656DI	9904657	9904654	9904654DI
Sampling Date	5/7/99	5/12/99	5/7/99	5/7/99	5/7/99	5/7/99	5/7/99	5/7/99
Volatile Organic Compounds µg/l								
Analyte	NS				NA			
Dilution factor, if other than one				10				10
Methylene Chloride		5JB	2JB	35JB		8B	31B	74JB
Benzene							15	13J
Toluene							45	35J
Ethylbenzene				3500			43	25J
1,1,2,2-Tetrachloroethane							10	
m,p-Xylene				2700			160	100
Isopropylbenzene				190			22	
n-Propylbenzene				420			38	14J
1,3,5-Trimethylbenzene				1300		1J	130	59
1,2,4-Trimethylbenzene				1900		1J	300E	230
sec-Butylbenzene				27J			34	10J
p-Isopropyltoluene				57			110	30J
1,3 Dichlorobenzene							1J	
1,2-Dichlorobenzene							23	11J
Naphthalene				740			330E	170
o-Xylene							99	68
Methyl tert butyl ether			10J				89	100J

Blank space Analyte not detected
U Analytes not detected
E Estimated value; analyte concentration below PQL
B Analyte in blank
NA Not analyzed
NS Not sampled
Analyte not listed was tested for but not detected in samples

Table 6
John F. Kennedy International Airport
Building 125
Groundwater Samples Analysis Results Summary
May 1999 Sampling

PA-NYNJ Sample ID	Duplicate	Duplicate	FB 5/7	FB 5/12	TB 5/7	TB 5/12
Laboratory ID	9904658	9904658DL	9904659	9904840	9904660	9904841
Sampling Date	5/7/99	5/7/99	5/7/99	5/12/99	5/7/99	5/12/99
Volatile Organic Compounds µg/l						
Analyte						
Dilution Factor, if other than one		5				
Methylene Chloride	2JB		3JB	3JB	8B	3JB
Benzene	15	11J				
Toluene	41	29				
Ethylbenzene	34	22J				
1,1,2,2-Tetrachloroethane						
m,p-Xylene	110	83				
Isopropylbenzene	9	6J				
n-Propylbenzene	14	8J				
1,3,5-Trimethylbenzene	51	39				
1,2,4-Trimethylbenzene	220E	150J				
sec-Butylbenzene	8					
p-Isopropyltoluene	27	16J				
1,3-Dichlorobenzene						
1,2-Dichlorobenzene	14	10J				
Naphthalene	220E	150				
o-Xylene	77	57				
Methyl tert butyl ether	110	76J				

Blank space Analyte not detected
U Analytes not detected
J Estimated value, analyte concentration below PQL
B Analyte in blank
NA Not analyzed
NS Not sampled
Analyte not listed was tested for but not detected in samples

Table 6
John F. Kennedy International Airport
Building 125
Groundwater Samples Analysis Results Summary
May 1999 Sampling

EA-NYNJ Sample ID	MW-BO-1	MW-BO-2	MW-BO-5	MW-BO-6	MW-BO-6	MW-BO-8	MW-BI-4	MW-BI-4
Laboratory ID		9904839	9904655	9904656	9904656DL	9904657	9904654	9904654DL
Sampling Date	5/7/99	5/12/99	5/7/99	5/7/99	5/7/99	5/7/99	5/7/99	5/7/99
Semivolatile Organic Compounds µg/l								
Analyte	NS	U	U			U		NA
Dilution factor, if other than one					5		10	
Acenaphthene				1J			130	
Bis(2-ethylhexyl)phthalate								
Dibenzofuran							61J	
Fluoranthene				1J				
Fluorene							260	
2-Methylnaphthalene				140	180		1000	
Naphthalene				360F	530		320	
Phenanthrene				2J			370	
Pyrene				2J			461	

Blank space Analyte not detected
U Analytes not detected
J Estimated value; analyte concentration below PQL
B Analyte in blank
NA Not analyzed
NS Not sampled
Analyte not listed was tested for but not detected in samples

Table 6
John F. Kennedy International Airport
Building 125
Groundwater Samples Analysis Results Summary
May 1999 Sampling

PA-NYNJ Sample ID	Duplicate	Duplicate	FB 5/7	FB 5/12	TB 5/7	TB 5/12
Laboratory ID	9904658	9904658DU	9904659	9904840	9904660	9904841
Sampling Date	5/7/99	5/7/99	5/7/99	5/12/99	5/7/99	5/12/99
Semivolatile Organic Compounds µg/L						
Analyte		NA	U	U	NA	NA
Dilution Factor, if other than one						
Acenaphthene						
Bis(2-ethylhexyl)phthalate	10					
Dibenzofuran	3J					
Fluoranthene	10J					
Fluorene	12					
2-Methylnaphthalene	60					
Naphthalene	50					
Phenanthrene	110					
Pyrene	81					

Blank space Analyte not detected
U Analytes not detected
J Estimated value, analyte concentration below PQL
B Analyte in blank
NA Not analyzed
NS Not sampled
Analyte not listed was tested for but not detected in samples

APPENDIX A

Survey Results, Soil Boring Logs, Well Construction Data

FA 323
6 75

THE PORT AUTHORITY OF NY & NJ
One World Trade Center, New York, N.Y. 10048

File No. 84 Acc. No. ____ Page No 12,666

FIELD COMPUTATION SHEET

Sheet No. 1 Of 2

Project JFKIA Contract No. A3 975.026 Office JFKEFO

Computer V.D. Cairano Date 4-21-98 Checked By ____ Date ____

Subject LOC & ELEV OF M.WELLS & B. HOLES OUTSIDE BLDG 125

Reference

SOUTH	EAST	ELEV.	M.W & B.H.#
51992	66074	13.24	"MW BO-1"
51915	66098	13.58	"MW BO-2"
51898	66158	13.30	"BH BO-3"
51875	66239	13.49	"MW BO-4"
51999	66279	13.56	"BH BO-5"
52023	66202	13.60	"MW BO-6"
52030	66152	13.75	"BH-BO-7"
52087	66079	14.06	"MW BO-8"
52089	66080	14.08	"BH SO-8A"

A 323
5-75

THE PORT AUTHORITY OF NY & NJ
One World Trade Center, New York, N.Y. 10048

File No. 84 Acc. No. ____ Page No. 12,667

FIELD COMPUTATION SHEET

Sheet No. 2 Of 2

Project JFKIA Contract No. 43 973.026 Office JFKEFO

Computer V.D. Gairand Date 4-21-98 Checked By ____ Date ____

Subject LOC & ELEV. OF M.WELLS & B. HOLES INSIDE BLDG 125
Reference

SOUTH	EAST	ELEV.	M.W & B.H.#
51965	66101	13.64	"BH BI-1"
51933	66160	13.65	"BH BI-2"
51911	66223	13.68	"BH BI-3"
51900	66265	13.69	"MW BI-4"
51955	66281	13.81	"BH BI-5"
51965	66239	13.70	"BH BI-6"
51984	66175	13.57	"BH BI-7"
52000	66111	13.67	"BH BI-8"
51925	66272	13.61	"BH BI-9"
51930	66273	13.85	"BH BI-9A"
51929	66270	13.79	"BH BI-9B"

PA 547
6-90

THE PORT AUTHORITY OF NY & NJ

Engineering Department
Construction Division
Materials Engineering Section

BORING REPORT

SHEET 1 OF 4

PROJECT	NAME OF CONTRACTOR	BORING NO	SURFACE ELEV.
JFK BUILDING 125	CRAIG	MW-BO.1	
LOCATION		**CONTRACT NO.**	**DATE**
± 60' S.W. FROM N.W. CORNER OF BLDG. 125		426.98.009	4-1-98

SPOON	CASING SIZE	HOLE TYPE
2" O.D. 1 3/8" I.D.	H.S. Augers	"A" Monitor

HAMMER (SAFETY)	HAMMER
140 # FALL 30"	# FALL "

DRILLER: S. BURNS

INSPECTOR: M OUDEH

GROUND WATER LEVEL

Date	Time	Depth	Remarks
4/1	PM	5.9'	found while hand augering

CASING BLOWS/FT.	DEPTH	SPOON BLOWS/6"	RE-COV'D[1]	SAMP. NO.[3]	[2]SAMPLE DESCRIPTION AND REMARKS — LINE LOCATES CHANGE OF PROFILE
Hand Auger	0	Hand Auger	Full Penetration	—	Fill br. c-f sand little gravel, tr. silt
				—	Misc. fill br c-f sand, some cobbles, tr. brick, tr. silt
H.S. Augers	5			1	Fill br c-f sand, tr. gravel, tr. silt
		2-2 / 2-4	18"	2	SAME
		4-6 / 6-6	18"	3	SAME
	10	7-9 / 9-11	12"	4	Fill br. m-f sand. little gravel, tr. silt
					12.0'
					NOTE: All samples screened for VOC's with a PID. S#1 saved and the remaining were discarded.
	15				Bottom of boring
	20				
	25				

NOTES: 1 — Length recovered; 0" — Loss of Sample, T — Trap used
2 — U = undisturbed; A = auger; OER = open end rod; V = vane
3 — Log depth of change in color of wash water, loss of water, artesian water, sand heave in casing, etc.

PORT AUTHORITY OF NY & NJ
Engineering Department - Materials Division

Installation Report

Sheet 2 of 4

PROJECT				CONTRACT NO
JFK BUILDING 125				426.98-009
LOCATION				CONTRACTOR
±60' S.W. FROM N.W. CORNER OF BLDG. 125				CRAIG
WELL NO	WELL TYPE	INSPECTOR	DRILLER	DATE
MW-BO-1	"A" MONITOR	M. OUDEH	S. BURNS	4-2-98

Well Development Report

(NOTE: WATER LEVEL READINGS FROM TOP OF PVC)

DATE	WATER LEVEL BEFORE	WATER LEVEL AFTER	TAKEN	
4/2/98	6.2'	6.2'	60	MINUTES AFTER

L1 = 0.3'

L2 = 2.7'

L3 = 9'

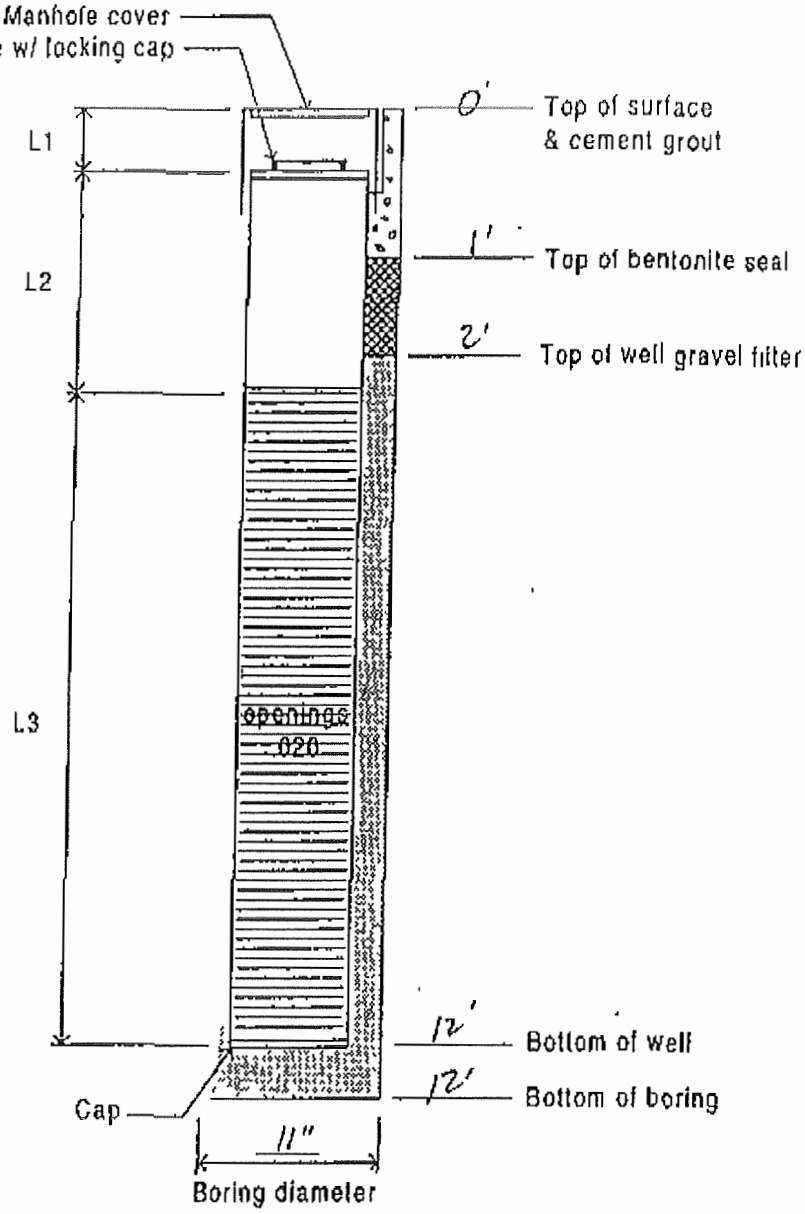

REMARKS:

THE PORT AUTHORITY OF N.Y & N.J.

ENGINEERING DEPARTMENT

MATERIALS ENGINEERING DIVISION

PID READINGS

PROJECT: JFK BUILDING 125

BORING No. MW-BO-4 | DATE: 4-1/4-2-98

FIELD READINGS BY: M. OUDEH | PID Model:

TIME	SAMPLE No.	IN-SITU Split Spoon Reading	HEAD-Space Reading	BREATHING Zone Reading	REMARKS
4/1/98 PM	0-2'	–	0	0	
↓	2'-4.5'	–	0	0	
↓	1	–	0	0	
4/2/98 AM	2	–	0	0	
↓	3	–	0	0	
↓	4	–	0	0	

THE PORT AUTHORITY OF N.Y & N.J.

ENGINEERING DEPARTMENT
MATERIALS ENGINEERING DIVISION
CHAIN OF CUSTODY RECORD

Sheet 4 of 4

PROJECT:	JFK Building 125		
LOCATION:	±60' s.w. from N.w. corner of Bldg. 125	DATE:	4-2-98
BORING No:	MW-BU-1	TOTAL No. OF SAMPLES:	1

SIGNATURE OF ALL PRESENT AT SAMPLING: [signature]

RELINQUISHED BY (SIGN)	[signature]	DATE 4-2-98 TIME	RECEIVED BY (SIGN)
RELINQUISHED BY (SIGN)		DATE TIME	RECEIVED BY (SIGN)
RELINQUISHED BY (SIGN)		DATE TIME	RECEIVED BY LAB

REMARKS: 1 sample taken in 1 one pt. JAR & 1 VOA

PA 547
6-90

THE PORT AUTHORITY OF NY & NJ

Engineering Department
Construction Division
Materials Engineering Section

BORING REPORT

SHEET 1 OF 4

PROJECT	NAME OF CONTRACTOR	BORING NO.	SURFACE ELEV
JFK BUILDING 125	CRAIG	MW-BD-2	
LOCATION: ±30' N.E. FROM THE N.W. CORNER OF BLDG. 125		CONTRACT NO. 426-93-009	DATE 4-1-98

SPOON	CASING SIZE	HOLE TYPE
2" O.D. 1 3/8" I.D.	H.S. Augers	"A" Monitor

HAMMER (SAFETY)	HAMMER
140 # FALL 30"	# FALL "

DRILLER: S. BURNS

INSPECTOR: M. DUDEK

GROUND WATER LEVEL

Date	Time	Depth	Remarks
4/1/98	AM	6'	Found while hand augering

CASING BLOWS/FT.	DEPTH	SPOON BLOWS/6"	RE-COV'D [1]	SAMP. NO. [2]	[3] SAMPLE DESCRIPTION AND REMARKS — LINE LOCATES CHANGE OF PROFILE
Hand Auger	0	Hand Auger	Full Recovery	-	Misc. Fill br. m-f Sand, little gravel, tr. brick, tr. silt
				-	Misc. Fill br. m-f Sand and cobbles, tr. brick, tr. silt
H.S. Augers	5			-	Fill br. m-f Sand, tr. gravel, tr. silt
				1	SAME
		1-0	20"	2	Fill br. fine Sand, tr. gravel, tr. silt
		1-1			
		4-3	18"	3	Fill br. m-f Sand, tr. gravel, tr. silt
	10	3-2			
		2-3	20"	4	SAME
		3-3			
					12.0'
					NOTE: All samples were screened for VOC's with a PID. S#1 saved and the remaining were discarded.
	15				
					Bottom of Boring
	20				
	25				

NOTES. 1 — Length recovered; 0" — Loss of Sample, T — Trap used
2 — U = undisturbed; A = auger; OER = open end rod; V = vane
3 — Log depth of change in color of wash water, loss of water, artesian water, sand heave in casing, etc.

PORT AUTHORITY OF NY & NJ
Engineering Department - Materials Division

Installation Report

Sheet 2 of 4

PROJECT				CONTRACT NO
JFK BUILDING 125				426-98-009
LOCATION ± 30' N.E. FROM THE N.W. CORNER OF BLDG. 125				CONTRACTOR CRAIG
WELL NO. MW-80-2	WELL TYPE 4" MONITOR	INSPECTOR M. OUDEH	DRILLER S. BURNS	DATE 4-1-98

Well Development Report

(NOTE WATER LEVEL READINGS FROM TOP OF PVC)

DATE			
4/1/98	WATER LEVEL BEFORE 6.4'	WATER LEVEL AFTER 6.4'	TAKEN 60 MINUTES AFTER

L1 = 0.3

L2 = 2.7'

L3 = 9'

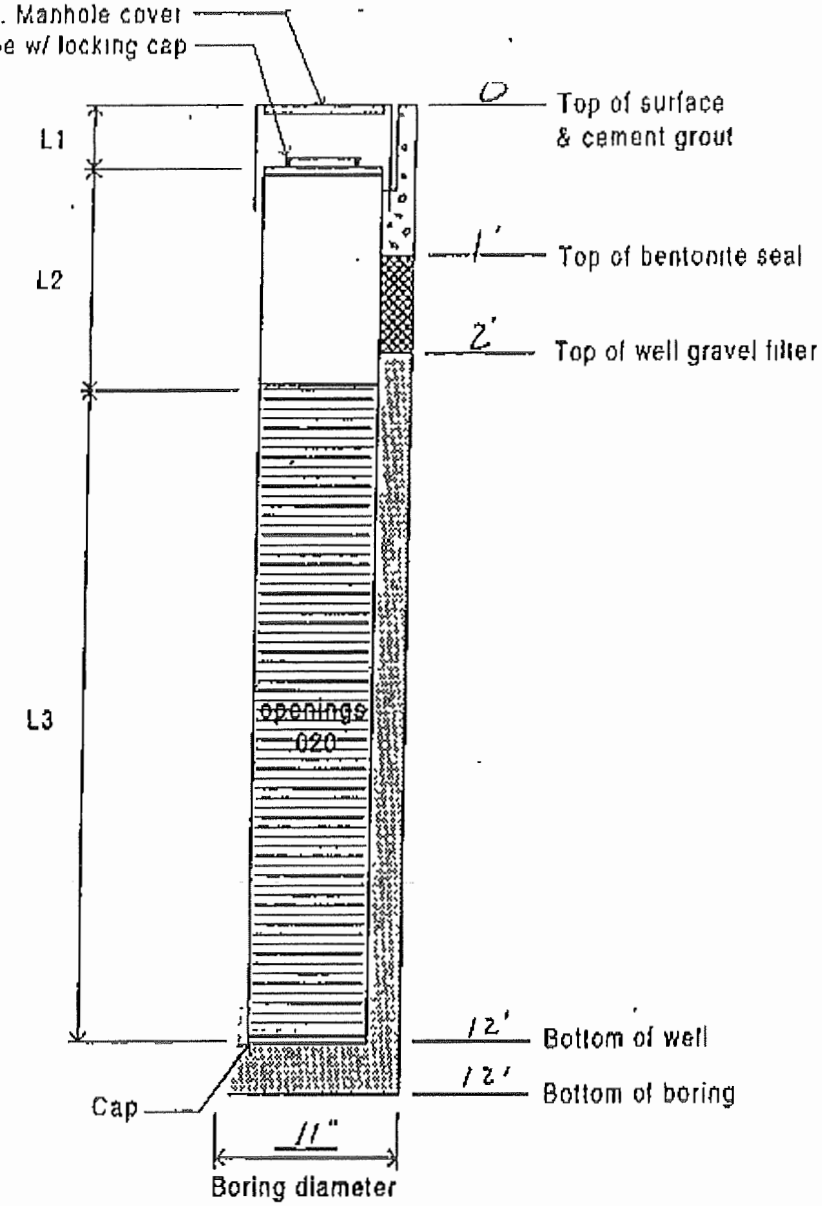

REMARKS

THE PORT AUTHORITY OF N.Y & N.J.

ENGINEERING DEPARTMENT
MATERIALS ENGINEERING DIVISION
PID READINGS

PROJECT: JFK BUILDING 125

BORING No. MW-BO-2 | DATE: 4-1-98

FIELD READINGS BY: M. OUDEH | PID Model: MINI RAE

TIME	SAMPLE No.	IN-SITU Split Spoon Reading	HEAD-Space Reading	BREATHING Zone Reading	REMARKS
AM	0'-2'	–	0	0	
	2'-4'	–	0	0	
	4'-5'	–	0	0	
	1	–	0	0	
	5.5'-6'	–	0	0	
	2	–	0	0	
	3	–	0	0	
	4	–	0	0	

THE PORT AUTHORITY OF N.Y & N.J.

ENGINEERING DEPARTMENT
MATERIALS ENGINEERING DIVISION
CHAIN OF CUSTODY RECORD

Sheet 4 of 4

PROJECT: JFK Bldg. 125

LOCATION: ± 30' N.E. FROM THE N.W. CORNER of Bldg. 125 | DATE: 4-1-98

BORING No: MW-BO-2 | TOTAL No. OF SAMPLES: 1

SIGNATURE OF ALL PRESENT AT SAMPLING

RELINQUISHED BY (SIGN)	DATE 4-1-98 TIME	RECEIVED BY (SIGN)
RELINQUISHED BY (SIGN)	DATE TIME	RECEIVED BY (SIGN)
RELINQUISHED BY (SIGN)	DATE TIME	RECEIVED BY LAB

REMARKS: 1 Sample taken in 1 ont pt. JAR & 1 VOP

A 547
6-90

THE PORT AUTHORITY OF NY & NJ

Engineering Department
Construction Division
Materials Engineering Section

BORING REPORT

SHEET 1 OF 3

PROJECT	NAME OF CONTRACTOR	BORING NO.	SURFACE ELEV
JFK BUILDING 125	CRAIG	BO-3	

LOCATION	CONTRACT NO.	DATE
± 65' EAST FROM MW-BO-2	426-98-009	4-1-98

SPOON	CASING SIZE	HOLE TYPE
2 "O.D. 1 3/8 "I.D.	H.S. Augers	I

HAMMER (SAFETY) 140 # FALL 30 "
HAMMER # FALL "

DRILLER: S. Burns

INSPECTOR: M. OUDEH

GROUND WATER LEVEL

Date	Time	Depth	Remarks
4-1-98	AM	5.2'	Found while hand augering

CASING BLOWS/FT.	DEPTH	SPOON BLOWS/6"	RE-COV'D[1]	SAMP.[2] NO.	[3]SAMPLE DESCRIPTION AND REMARKS ____ LINE LOCATES CHANGE OF PROFILE
Hand Auger / H.S. Auger	0	Hand Auger	Full Recovery	-	Misc. Fill br. m.f sand, little gravel, tr. silt
				-	Misc. Fill br. m.f sand, some cobbles, tr. silt
				-	SAME
	5			1	Fill br. m-f sand, tr. gravel, tr. silt
				-	same
		3-3	19"	2	same
		3-3			
		3-3	18"	3	Same
	10	3-6			10.0'
					NOTE: All samples were screened for VOC's with a PID. S#1 was saved and the remaining were discarded.
	15				
					Bottom of Boring
	20				
	25				

NOTES: 1 — Length recovered; 0" — Loss of Sample, T — Trap used
2 — U = undisturbed; A = auger; OER = open end rod; V = vane
3 — Log depth of change in color of wash water, loss of water, artesian water, sand heave in casing, etc.

THE PORT AUTHORITY OF N.Y & N.J.

ENGINEERING DEPARTMENT
MATERIALS ENGINEERING DIVISION
PID READINGS

PROJECT: JFK BUILDING 125

BORING No. BO-3 | DATE: 4-1-98

FIELD READINGS BY: M. OUDEH | PID Model: MINI RAE

TIME	SAMPLE No.	IN-SITU Split Spoon Reading	HEAD-Space Reading	BREATHING Zone Reading	REMARKS
AM	0'-4.5'	–	0	0	
↓	1.	–	0	0	
	5'-6'	–	0	0	
	2	–	0	0	
	3	–	0	0	

THE PORT AUTHORITY OF N.Y & N.J.

ENGINEERING DEPARTMENT
MATERIALS ENGINEERING DIVISION
CHAIN OF CUSTODY RECORD

Sheet 3 of 3

PROJECT: JFK BUILDING 125

LOCATION: ± 65' EAST FROM MW-BO-2 | DATE: 4-1-98

BORING No: BO-3 | TOTAL No. OF SAMPLES: 1

SIGNATURE OF ALL PRESENT AT SAMPLING: [signature]

RELINQUISHED BY (SIGN) [signature]	DATE 4-1-98 TIME	RECEIVED BY (SIGN)
RELINQUISHED BY (SIGN)	DATE TIME	RECEIVED BY (SIGN)
RELINQUISHED BY (SIGN)	DATE TIME	RECEIVED BY LAB

REMARKS: 1 SAMPLE TAKEN IN 1 ONE pt. JAR & 1 VOA

PA 547
6-90

THE PORT AUTHORITY OF NY & NJ

Engineering Department
Construction Division
Materials Engineering Section

BORING REPORT

SHEET 1 OF 4

PROJECT	NAME OF CONTRACTOR	BORING NO.	SURFACE ELEV.
JFK BUILDING 125	CRAIG	MW-BO-4	
LOCATION ±25' N.W. FROM THE N.E. CORNER OF BLDG. 125		CONTRACT NO. 426-98-009	DATE 4-1-98

SPOON	CASING SIZE	HOLE TYPE
2" O.D. 1 3/8" I.D.	H.S. Augers	"A" Monitor

HAMMER (SAFETY)	HAMMER
140 # FALL 30"	# FALL "

DRILLER: S. BURNS

INSPECTOR: M DUTCH

GROUND WATER LEVEL

Date	Time	Depth	Remarks
4/1	AM	6.4'	Found S #2

CASING BLOWS/FT.	DEPTH	SPOON BLOWS/6"	RE-COV'D[1]	SAMP.[2] NO.	[3]SAMPLE DESCRIPTION AND REMARKS LINE LOCATES CHANGE OF PROFILE
	0				Asphalt / crushed Stone 0.5
Hand Auger		Hand Auger	Full	"	Misc. fill br. c-f sand, little gravel, tr. silt, tr. brick
			RECOVERED 0		Misc. fill br. c-f sand, some cobbles, tr. brick, tr. silt
	5				
				1	Fill br. c-f sand, tr. gravel, tr. silt
		3-3	18"	2	Same
		6-6			
		6-7	18"	3	Same
	10	13-10			
		7-8	20"	4	Same
		8-8			12.0'
	15				NOTE: All samples were screened for VOC's with a PID. S#1 saved and the remaining were discarded
	20				
					Bottom of Boring
	25				

NOTES: 1 — Length recovered; 0" — Loss of Sample, T — Trap used
2 — U = undisturbed; A = auger; OER = open end rod; V = vane
3 — Log depth of change in color of wash water, loss of water, artesian water, sand heave in casing, etc.

PORT AUTHORITY OF NY & NJ
Engineering Department - Materials Division

Well Installation Report

PROJECT				CONTRACT NO
JFK BUILDING 125				426-98-009
LOCATION				CONTRACTOR
±25' N.W. FROM THE N.E. CORNER OF BLDG. 125'				CRAIG
WELL NO	WELL TYPE	INSPECTOR	DRILLER	DATE
MW-BO-4	"A" MONITOR	M. DUDEK	S. BURNS	4-1-98

Well Development Report

(NOTE- WATER LEVEL READINGS FROM TOP OF PVC)

DATE	WATER LEVEL BEFORE	WATER LEVEL AFTER	TAKEN	MINUTES AFTER
4/1/98	6.5'	6.5'	60	

L1 = 0.3'

L2 = 2.7'

L3 = 9'

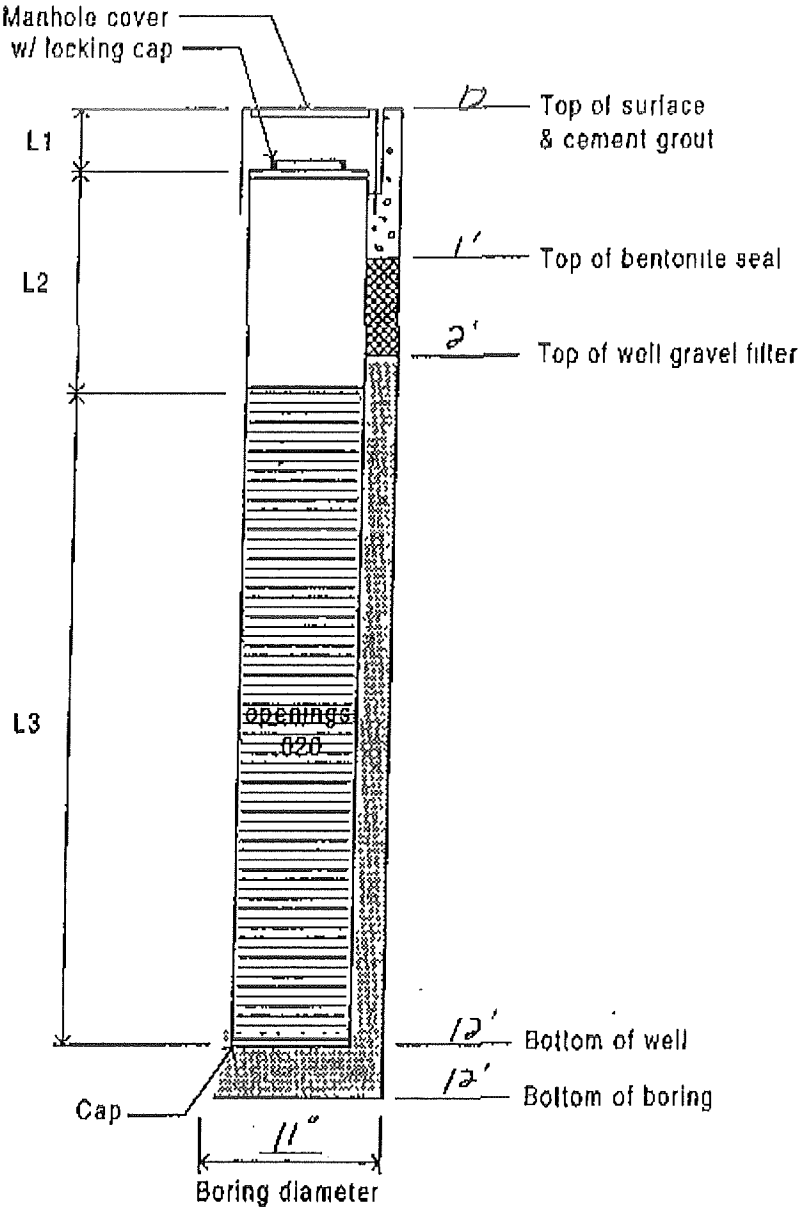

REMARKS:

THE PORT AUTHORITY OF N.Y & N.J.

ENGINEERING DEPARTMENT
MATERIALS ENGINEERING DIVISION
PID READINGS

PROJECT: JFK BUILDING 125

BORING No. MW-30-4 DATE: 4-1-98

FIELD READINGS BY: N. OUDEH PID Model: Mini RAE

TIME	SAMPLE No.	IN-SITU Split Spoon Reading	HEAD-Space Reading	BREATHING Zone Reading	REMARKS
Am	(0.5-2')	—	0	0	
	(2'-3')	—	0	0	
	1	—	0	0	
	2	—	0	0	
	3	—	0	0	
	4	—	0	0	

THE PORT AUTHORITY OF N.Y & N.J.

ENGINEERING DEPARTMENT
MATERIALS ENGINEERING DIVISION
CHAIN OF CUSTODY RECORD

Sheet 4 of 4

PROJECT: JFK BUILDING 125

LOCATION: ±25' N.W. FROM THE N.E. CORNER OF BLDG. 125 | DATE: 4-1-98

BORING No: MW-BO-4 | TOTAL No. OF SAMPLES: 1

SIGNATURE OF ALL PRESENT AT SAMPLING

RELINQUISHED BY (SIGN)	DATE 4-1-98 TIME	RECEIVED BY (SIGN)
RELINQUISHED BY (SIGN)	DATE TIME	RECEIVED BY (SIGN)
RELINQUISHED BY (SIGN)	DATE TIME	RECEIVED BY LAB

REMARKS: 1 Sample taken in 1 one pt. Jar. & 1 VOA

PA 547
6-90

THE PORT AUTHORITY OF NY & NJ

Engineering Department
Construction Division
Materials Engineering Section

BORING REPORT

SHEET 1 OF 3

PROJECT	NAME OF CONTRACTOR	BORING NO.	SURFACE ELEV.
JFK BUILDING 125	CRAIG	BO-5	

LOCATION	CONTRACT NO.	DATE
1-23' S.W. FROM S.E. CORNER of Bldg. 125	426-98-009	4-6-98

SPOON	CASING SIZE	HOLE TYPE
"O.D. "I.D.	Hand Auger	I
HAMMER # FALL "	HAMMER # FALL "	

DRILLER: G. BURNS

INSPECTOR: M. ONDEH

GROUND WATER LEVEL

Date	Time	Depth	Remarks
4/6/98	12:45 pm	6.9'	Found in S #3

CASING BLOWS/FT.	DEPTH	SPOON BLOWS/6"	RE-COV'D	SAMP. NO.	SAMPLE DESCRIPTION AND REMARKS LINE LOCATES CHANGE OF PROFILE
Hand Auger	0				ASPHALT PAVEMENT 0.5'
					CRUSHED STONE 0.9'
		Hand	Full	1	Fill Br c-f sand, tr. gravel, tr. silt
		AUGER	RECOVERY	2	Fill Br M-F sand, tr. gravel, tr. silt
	5				
				3	Same
					7.0'
					NOTE: All samples were screened for VOC's with A PID. S#3 SCUED and the remaining were DISCARDED.
	10				
	15				
	20				Bottom of Boring
	25				

NOTES: 1 — Length recovered; 0" — Loss of Sample, T — Trap used
2 — U = undisturbed; A = auger; OER = open end rod; V = vane
3 — Log depth of change in color of wash water, loss of water, artesian water, sand heave in casing, etc.

THE PORT AUTHORITY OF N.Y & N.J.

ENGINEERING DEPARTMENT
MATERIALS ENGINEERING DIVISION
PID READINGS

Sheet 2 of 3

PROJECT: JFK BLDG. 125

BORING No. BO-5 | DATE: 4-6-98

FIELD READINGS BY: M. OUDEH | PID Model: MINI RAE

TIME	SAMPLE No.	IN-SITU Split Spoon Reading	HEAD-Space Reading	BREATHING Zone Reading	REMARKS
PM	1	—	0	0	
↓	2	—	0	0	
↓	3	—	0	0	

THE PORT AUTHORITY OF N.Y & N.J.

ENGINEERING DEPARTMENT
MATERIALS ENGINEERING DIVISION
CHAIN OF CUSTODY RECORD

Sheet 3 of 3

PROJECT: JFK BUILDING 125

LOCATION: ±23' S.W. From S.E. corner of Bldg. 125 | DATE: 4-6-98

BORING No: BO-5 | TOTAL No. OF SAMPLES. 1

SIGNATURE OF ALL PRESENT AT SAMPLING

RELINQUISHED BY (SIGN)	DATE 4-6-98 TIME	RECEIVED BY (SIGN)
RELINQUISHED BY (SIGN)	DATE TIME	RECEIVED BY (SIGN)
RELINQUISHED BY (SIGN)	DATE TIME	RECEIVED BY LAB

REMARKS: 1 Sample taken in 1 one pt. JAR and 1 VOA

PA 547
6-90

THE PORT AUTHORITY OF NY & NJ

Engineering Department
Construction Division
Materials Engineering Section

BORING REPORT

SHEET 1 OF 4

PROJECT	NAME OF CONTRACTOR	BORING NO.	SURFACE ELEV
JFK BUILDING 125	CRAIG	HW BO-6	

LOCATION	CONTRACT NO.	DATE
± 47' EAST FROM BO-7	426-98-009	4-6-98

SPOON	CASING SIZE	HOLE TYPE
2 "O.D. 1 3/8 "I.D.	HAND AUGER	'A' Monitor

HAMMER (SAFETY)	HAMMER
140 # FALL 30 "	# FALL "

DRILLER: S. BURNS

INSPECTOR: M. OUDEH

GROUND WATER LEVEL

Date	Time	Depth	Remarks
4/6/98	9:25 AM	6.7'	found in S#4

CASING BLOWS/FT.	DEPTH	SPOON BLOWS/6"	RE-COV'D[1]	SAMP.[2] NO.	[3]SAMPLE DESCRIPTION AND REMARKS — LINE LOCATES CHANGE OF PROFILE
Hand Auger	0				Asphalt Pavement 0.3'
					Crushed stone, cobbles of concrete, little c-f sand 1.2'
		HAND AUGER	Full Recovery	1	Fill Br c-f sand, little gravel, tr. silt
				2	Fill grey-Br c-f sand, tr. gravel, tr. silt
	5			3	Fill grey-Br m-f sand, tr. gravel, tr. silt
His Auger				4	SAME (FULL ODOR)
		2-2 / 3-2	18"	5	Fill grey-Br m-f sand, tr. gravel, tr. silt (Full found in the sample)
	10	4-4 / 3-4	17"	6	SAME
		6-7 / 4-5	19"	7	SAME
					13.0'
	15				NOTE: All samples screened for VOC's with A PID. S#3 saved and the remaining were discarded.
	20				
					Bottom of Boring
	25				

NOTES: 1 — Length recovered; 0" — Loss of Sample, T — Trap used
2 — U = undisturbed; A = auger; OER = open end rod; V = vane
3 — Log depth of change in color of wash water, loss of water, artesian water, sand heave in casing, etc.

PORT AUTHORITY OF NY & NJ
Engineering Department - Materials Division

'l Installation Report

Sheet 2 of 4

PROJECT				CONTRACT NO
JFK BUILDING 125				426-98-009
LOCATION ± 47' EAST FROM BO-7				CONTRACTOR CRAIG
WELL NO MW-BO-6	WELL TYPE "A" MONITOR	INSPECTOR M. OUDEH	DRILLER S. BURNS	DATE 4-6-98

Well Development Report

(NOTE: WATER LEVEL READINGS FROM TOP OF PVC)

DATE	WATER LEVEL BEFORE	WATER LEVEL AFTER 6.7	TAKEN ____ MINUTES AFTER

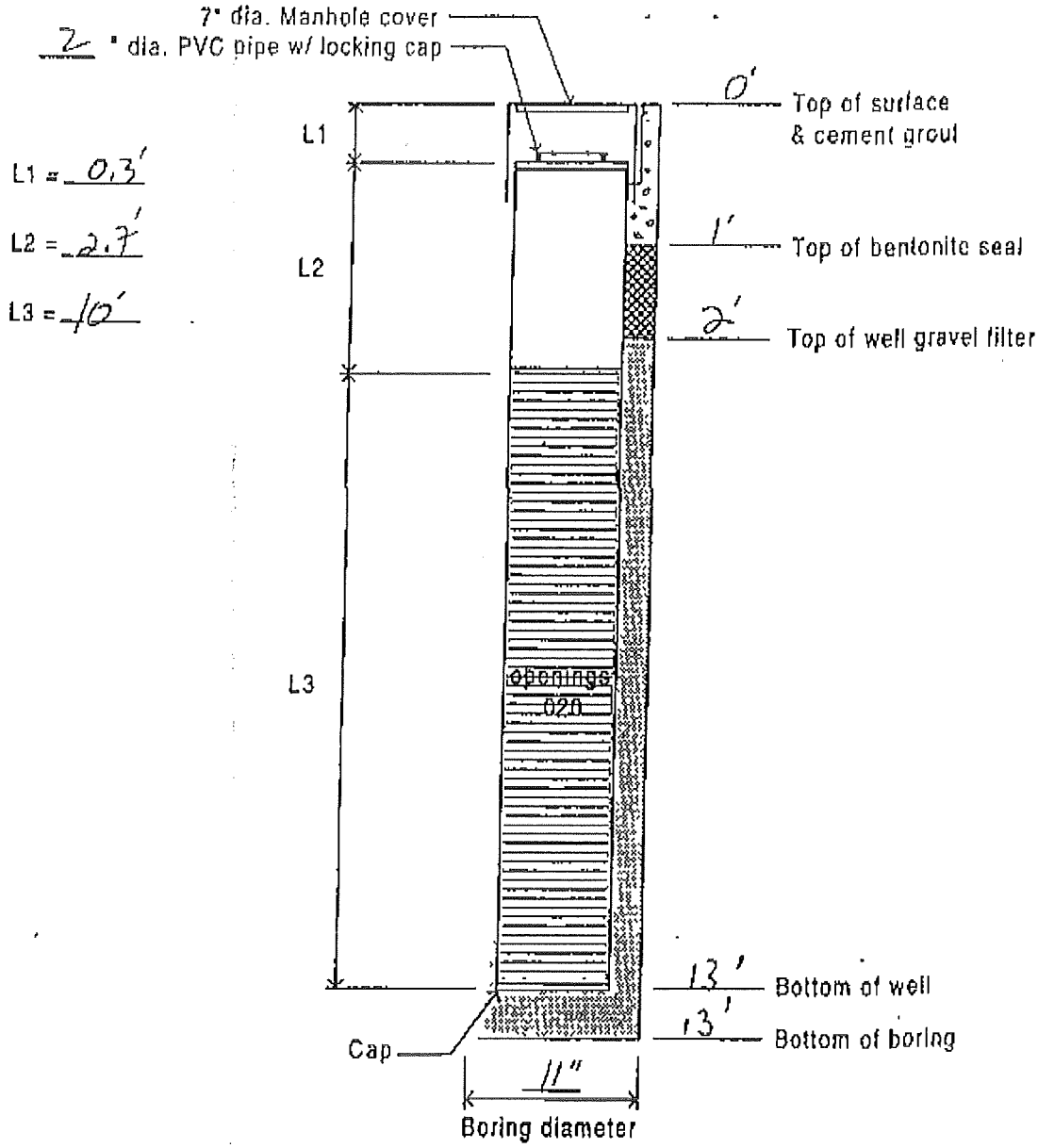

REMARKS:

THE PORT AUTHORITY OF N.Y & N.J.

ENGINEERING DEPARTMENT

MATERIALS ENGINEERING DIVISION

PID READINGS

Sheet 3 of 4

PROJECT: JFK BUILDING 125

BORING No. BO-6 | DATE: 4-6-98

FIELD READINGS BY: M. OUDEH | PID Model: MINI RAE

TIME	SAMPLE No.	IN-SITU Split Spoon Reading	HEAD-Space Reading	BREATHING Zone Reading	REMARKS
AM	1	—	0	0	
	2	—	11.4	0	
	3	—	211.7	0	
	4	—	195.8	0	
	5	—	242.5	0	
	6	—	207.4	0	
	7	—	157.3	0	

THE PORT AUTHORITY OF N.Y & N.J.

ENGINEERING DEPARTMENT
MATERIALS ENGINEERING DIVISION
CHAIN OF CUSTODY RECORD

Sheet 4 of 4

PROJECT: JFK Building 125

LOCATION: ±47' East From Bo-7 | DATE: 4-6-98

BORING No: Bo-6 | TOTAL No. OF SAMPLES: 1

SIGNATURE OF ALL PRESENT AT SAMPLING

RELINQUISHED BY (SIGN) | DATE 4-6-98 TIME | RECEIVED BY (SIGN)

RELINQUISHED BY (SIGN) | DATE TIME | RECEIVED BY (SIGN)

RELINQUISHED BY (SIGN) | DATE TIME | RECEIVED BY LAB

REMARKS: 1 Sample taken in 1 one pt. jar & 1 Vial

PA 547
6-90

THE PORT AUTHORITY OF NY & NJ

Engineering Department
Construction Division
Materials Engineering Section

BORING REPORT

SHEET 1 OF 3

PROJECT: JFK BUILDING 125	NAME OF CONTRACTOR: CRAIG	BORING NO.: BO-7	SURFACE ELEV.
LOCATION: ±90' N.E. FROM BO-8		CONTRACT NO.: 426-98-009	DATE: 4-6-98

SPOON	CASING SIZE	HOLE TYPE
"O.D. "I.D.	Hand Auger	I

HAMMER: # FALL " — HAMMER: # FALL "

DRILLER: S. BURNS

INSPECTOR: M. OUDEH

GROUND WATER LEVEL

Date	Time	Depth	Remarks
4/6/98	8:30 AM	6.7'	Found in Sample #3

CASING BLOWS/FT.	DEPTH	SPOON BLOWS/6"	REC'D	SAMP. NO.	SAMPLE DESCRIPTION AND REMARKS — LINE LOCATES CHANGE OF PROFILE	
	0				CONCRETE PAVEMENT	0.5'
					CRUSHED STONE, SOME COBBLES & COBBLES, little sand	1.5'
Hand Auger		HAND AUGER	FULL RECOVERY	1	Fill BR c-f sand, little Gravel, tr. silt	
				2	Same	
	5					
				3	Same	
				4	Same	7.0'
					NOTE: All samples screened for VOC's with A PID. S #3 saved and the remaining were discarded.	
	10					
	15					
					Bottom of Boring	
	20					
	25					

NOTES: 1 — Length recovered; 0" — Loss of Sample, T — Trap used
2 — U = undisturbed; A = auger; OER = open end rod; V = vane
3 — Log depth of change in color of wash water, loss of water, artesian water, sand heave in casing, etc.

THE PORT AUTHORITY OF N.Y & N.J.

ENGINEERING DEPARTMENT

MATERIALS ENGINEERING DIVISION

PID READINGS

PROJECT: JFK Bldg. 125

BORING No. Bo-7 | DATE: 4-6-98

FIELD READINGS BY: M. OUDEH | PID Model: Mini RAE

TIME	SAMPLE No.	IN-SITU Split Spoon Reading	HEAD-Space Reading	BREATHING Zone Reading	REMARKS
AM	1	—	0	0	
↓	2	—	0	0	
	3	—	0	0	
	4	—	0	0	

THE PORT AUTHORITY OF N.Y & N.J.

ENGINEERING DEPARTMENT
MATERIALS ENGINEERING DIVISION
CHAIN OF CUSTODY RECORD

Sheet 3 of 3

PROJECT: JFK Building 125	
LOCATION: ±90 N.E. from MW-Bo-8	DATE: 4-6-98
BORING No: Bo-7	TOTAL No OF SAMPLES: 1

SIGNATURE OF ALL PRESENT AT SAMPLING

RELINQUISHED BY (SIGN)	DATE 4-6-98 TIME	RECEIVED BY (SIGN)
RELINQUISHED BY (SIGN)	DATE TIME	RECEIVED BY (SIGN)
RELINQUISHED BY (SIGN)	DATE TIME	RECEIVED BY LAB

REMARKS: 1 Sample Taken in a 1 oz pt. JAR & 1 VOA.

PA 547
8-90

THE PORT AUTHORITY OF NY & NJ

Engineering Department
Construction Division
Materials Engineering Section

BORING REPORT

SHEET 1 OF 4

PROJECT	NAME OF CONTRACTOR	BORING NO.	SURFACE ELEV.
JFK BUILDING 125	CRAIG	MW-80-8	

LOCATION	CONTRACT NO.	DATE
± 48' S.W. from S.W. corner of Bldg. 125	426-98-009	4-2-98

SPOON	CASING SIZE	HOLE TYPE
2" O.D. 1 3/8" I.D.	4.5 Auger	"A" Monitor

HAMMER	HAMMER
140 # FALL 30"	# FALL "

DRILLER: S. BURNS

INSPECTOR: M. OUDEH

GROUND WATER LEVEL

Date	Time	Depth	Remarks
4/2	PM	7.4'	Found in S#2

CASING BLOWS/FT.	DEPTH	SPOON BLOWS/6"	RE-COV'D	SAMP. NO.	SAMPLE DESCRIPTION AND REMARKS — LINE LOCATES CHANGE OF PROFILE
	0				Asphalt / crushed stone 0.5'
Hand Auger		Hand Auger	Full Recovery		fill br. c-f sand, little gravel, tr. silt
	5				
4.5 Augers				1	Same
		6-7 7-6	18"	2	fill br.-grey m-f sand, tr. gravel, tr. silt
	10	7-7 7-3	18"	3	fill br. m-f sand, tr. gravel, tr. silt
		4-6 9-10	19"	4	Same 13.0'
	15				NOTE: All samples screened for VOC's with A PID. S#1 saved and the remaining were discarded.
	20				Bottom of Boring
	25				

NOTES: 1 — Length recovered; 0" — Loss of Sample, T — Trap used
2 — U = undisturbed; A = auger; OER = open end rod; V = vane
3 — Log depth of change in color of wash water, loss of water, artesian water, sand heave in casing, etc.

PORT AUTHORITY OF NY & NJ
Engineering Department - Materials Division

Installation Report

Sheet 2 of 4

PROJECT				CONTRACT NO
JFK BUILDING 125				426-98-009
LOCATION				CONTRACTOR
± 48' S.W. from S.W. corner of Bldg. 125				CRAIG
WELL NO.	WELL TYPE	INSPECTOR	DRILLER	DATE
MW-B0-8	"A" MONITOR	M. OUDEH	S. BURNS	4-2-98

Well Development Report

(NOTE WATER LEVEL READINGS FROM TOP OF PVC)

DATE	WATER LEVEL BEFORE	WATER LEVEL AFTER	TAKEN	MINUTES AFTER
4/2/98	7.3'	7.3'	60	

L1 = 0.3'

L2 = 2.7'

L3 = 10'

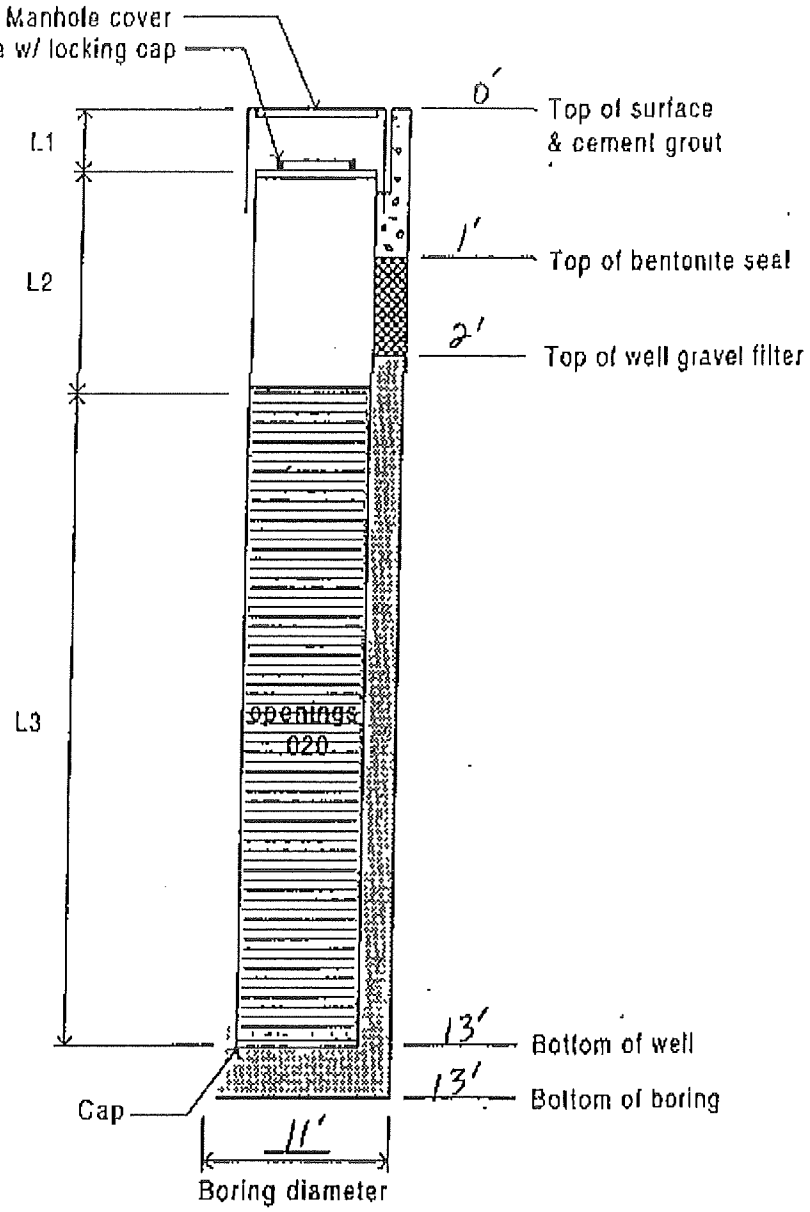

REMARKS:

THE PORT AUTHORITY OF N.Y & N.J.

ENGINEERING DEPARTMENT
MATERIALS ENGINEERING DIVISION
PID READINGS

PROJECT: JFK BUILDING 125

BORING No. MW-BO-4 | DATE: 4-2-98

FIELD READINGS BY: M. OUDEH | PID Model: MINI RAE

TIME	SAMPLE No.	IN-SITU Split Spoon Reading	HEAD-Space Reading	BREATHING Zone Reading	REMARKS
PM	0.5'-6'	–	0	0	
	1	–	0	0	
	2	–	0	0	
	3	–	0	0	
	4	–	0	0	

THE PORT AUTHORITY OF N.Y & N.J.

ENGINEERING DEPARTMENT
MATERIALS ENGINEERING DIVISION
CHAIN OF CUSTODY RECORD

Sheet 4 of 4

PROJECT: JFK BUILDING 125

LOCATION: ±48' S.W. From S.W. Corner of Bldg. 125 | DATE: 4-2-98

BORING No: MW-BO-8 | TOTAL No OF SAMPLES: 2

SIGNATURE OF ALL PRESENT AT SAMPLING

RELINQUISHED BY (SIGN) | DATE 4-2-98 TIME | RECEIVED BY (SIGN)

RELINQUISHED BY (SIGN) | DATE TIME | RECEIVED BY (SIGN)

RELINQUISHED BY (SIGN) | DATE TIME | RECEIVED BY LAB

REMARKS: 1 Sample taken in 1 one pt. JAR

PA 547
6-90

THE PORT AUTHORITY OF NY & NJ

Engineering Department
Construction Division
Materials Engineering Section

BORING REPORT

SHEET 1 OF 1

PROJECT	NAME OF CONTRACTOR	BORING NO	SURFACE ELEV.
JFK BUILDING 125	CRAIG	BO-8A	
LOCATION: ± 4' North from MW-BO-8		CONTRACT NO. 426-98-009	DATE 4-2-98

SPOON: "O.D. "I.D. | CASING SIZE | HOLE TYPE: I

HAMMER: # FALL " | HAMMER: # FALL "

DRILLER: S. Burns

INSPECTOR: M Ouden

GROUND WATER LEVEL

Date	Time	Depth	Remarks

CASING BLOWS/FT.	DEPTH	SPOON BLOWS/6"	REC.[1] COV'D	SAMP.[2] NO.	[3]SAMPLE DESCRIPTION AND REMARKS LINE LOCATES CHANGE OF PROFILE
	0				Asphalt / crushed Rock 0.5'
		Hand auger	Full Recovery	-	Fill br. c-f Sand, little gravel, tr. silt
					4.5'
	5				
	10				Bottom of Boring (obstruction found at 4.5' Relocated Boring Hole.)
	15				
	20				
	25				

NOTES: 1 — Length recovered; 0" — Loss of Sample, T — Trap used
2 — U = undisturbed; A = auger; OER = open end rod; V = vane
3 — Log depth of change in color of wash water, loss of water, artesian water, sand heave in casing, etc.

PA 547
6-90

THE PORT AUTHORITY OF NY & NJ

Engineering Department
Construction Division
Materials Engineering Section

BORING REPORT

SHEET 1 OF 3

PROJECT: JFK Building 135	NAME OF CONTRACTOR: CRAIG	BORING NO.: BI-1	SURFACE ELEV.:
LOCATION: ±40' North From BI-8		CONTRACT NO.: 426-98-009	DATE: 4-8-98

SPOON	CASING SIZE	HOLE TYPE
"O.D. "I.D	Hand Auger	I
HAMMER # FALL "	HAMMER # FALL "	

DRILLER: S. Burns

INSPECTOR: M. Oudeh

GROUND WATER LEVEL

Date	Time	Depth	Remarks
4/8	10:15 Am	7.0'	found in S #4

CASING BLOWS/FT.	DEPTH	SPOON BLOWS/6"	RE-COV'D[1]	SAMP.[2] NO.	[3]SAMPLE DESCRIPTION AND REMARKS LINE LOCATES CHANGE OF PROFILE
	0				Concrete Pavement 0.5'
Hand Auger		Hand Auger	Full Recovery	1	Fill brown c-f Sand, little gravel, trace silt
				2	Same
	5			3	Same
				4	Fill brown m-f Sand, little silt, trace Gravel 7.0'
					NOTE: All SAMPLES SCREENED FOR VOC'S WITH A PID. S#4 SAVED AND THE REMAINING WERE DISCARDED.
	10				
	15				Bottom of Boring
	20				
	25				

NOTES: 1 — Length recovered; 0" = Loss of Sample, T — Trap used
2 — U = undisturbed; A = auger; OER = open end rod; V = vane
3 — Log depth of change in color of wash water, loss of water, artesian water, sand heave in casing, etc.

THE PORT AUTHORITY OF N.Y & N.J.

ENGINEERING DEPARTMENT
MATERIALS ENGINEERING DIVISION
PID READINGS

PROJECT: JFK BUILDING 125

BORING No. BI-1 | DATE: 4-8-98

FIELD READINGS BY: H. DUDEH | PID Model: MINI RAE

TIME	SAMPLE No.	IN-SITU Split Spoon Reading	HEAD-Space Reading	BREATHING Zone Reading	REMARKS
AM	1	-	0	0	
	2	-	0	0	
	3	-	0	0	
	4	-	0	0	

THE PORT AUTHORITY OF N.Y & N.J.

ENGINEERING DEPARTMENT
MATERIALS ENGINEERING DIVISION
CHAIN OF CUSTODY RECORD

Sheet 3 of 3

PROJECT: JFK BUILDING 125

LOCATION: ± 40' NORTH FROM B7-B | DATE: 4-8-98

BORING No: BI-1 | TOTAL No. OF SAMPLES: 1

SIGNATURE OF ALL PRESENT AT SAMPLING

RELINQUISHED BY (SIGN)	DATE 4-8-98 TIME	RECEIVED BY (SIGN)
RELINQUISHED BY (SIGN)	DATE TIME	RECEIVED BY (SIGN)
RELINQUISHED BY (SIGN)	DATE TIME	RECEIVED BY LAB

REMARKS: 1 sample taken in 1 one pt. JAR and 1 VOA

PA 547
6-90

THE PORT AUTHORITY OF NY & NJ

Engineering Department
Construction Division
Materials Engineering Section

BORING REPORT

SHEET 1 OF 3

PROJECT	NAME OF CONTRACTOR	BORING NO.	SURFACE ELEV.
JFK BUILDING 125.	CRAIG	BI-7	

LOCATION	CONTRACT NO.	DATE
±64' WEST From BI-3	426-98-009	4-8-98

SPOON	CASING SIZE	HOLE TYPE
"O.D. "I.D.	Hand Auger	I

HAMMER	HAMMER
# FALL "	# FALL "

DRILLER: S. Burris

INSPECTOR: M. Oudell

GROUND WATER LEVEL

Date	Time	Depth	Remarks
4/8	11:20 Am	7.0'	found in S#4

CASING BLOWS/FT.	DEPTH	SPOON BLOWS/6"	RE-COV'D	SAMP.[3] NO.	[3]SAMPLE DESCRIPTION AND REMARKS LINE LOCATES CHANGE OF PROFILE
Hand Auger	0	Hand Auger	Full Recovery		Concrete Pavement 0.5'
					Crushed Rock 0.9'
					Boulder 1.3'
				1	Fill brown c-f sand, little gravel, tr. silt
				2	Same
	5			3	Fill brown m-f sand, tr. gravel, tr. silt
				4	Same 7.0'
	10				Note: All samples screened for VOC's with a PID. S#4 saved and the remaining were discarded.
					Bottom of Boring
	15				
	20				
	25				

NOTES: 1 — Length recovered; 0" — Loss of Sample, T — Trap used
2 — U = undisturbed; A = auger; OER = open end rod; V = vane
3 — Log depth of change in color of wash water, loss of water, artesian water, sand heave in casing, etc.

THE PORT AUTHORITY OF N.Y & N.J.

ENGINEERING DEPARTMENT
MATERIALS ENGINEERING DIVISION
PID READINGS

PROJECT: JFK BUILDING 125

BORING No. BI-2 | DATE: 4-8-98

FIELD READINGS BY: M. OUDEH | PID Model: Mini RAE

TIME	SAMPLE No.	IN-SITU Split Spoon Reading	HEAD-Space Reading	BREATHING Zone Reading	REMARKS
AM	1	-	0	0	
	2	-	0	0	
	3	-	0	0	
	4	-	0	0	

THE PORT AUTHORITY OF N.Y & N.J.

ENGINEERING DEPARTMENT
MATERIALS ENGINEERING DIVISION
CHAIN OF CUSTODY RECORD

Sheet 3 of 3

PROJECT: JFK BUILDING 125

LOCATION: ±64' WEST FROM BI-3 | DATE: 4-8-98

BORING No: BI-2 | TOTAL No. OF SAMPLES: 1

SIGNATURE OF ALL PRESENT AT SAMPLING

RELINQUISHED BY (SIGN) — DATE 4-8-98 — TIME — RECEIVED BY (SIGN)

RELINQUISHED BY (SIGN) — DATE — TIME — RECEIVED BY (SIGN)

RELINQUISHED BY (SIGN) — DATE — TIME — RECEIVED BY LAB

REMARKS: 1 Sample taken in Lane pt. JAR and 1 VOA

PA 547
6-90

THE PORT AUTHORITY OF NY & NJ

Engineering Department
Construction Division
Materials Engineering Section

BORING REPORT

SHEET 1 OF 3

PROJECT	NAME OF CONTRACTOR	BORING NO.	SURFACE ELEV.
JFK BUILDING 125	CRAIG	BI-3	

LOCATION	CONTRACT NO.	DATE
FROM NORTH WALL 5'18' SOUTH AND FROM EAST OFFICE WALL 5'18' EAST	426-98-009	4/7/98

SPOON	CASING SIZE	HOLE TYPE
"O.D. "I.D.	HAND AUGER	I
HAMMER	HAMMER	
" FALL "	" FALL "	

DRILLER: S. BURNS

INSPECTOR: CARLOS L. PEREZ

GROUND WATER LEVEL

Date	Time	Depth	Remarks
4/7/98	AM	7.0'	SAMPLE # 4

CASING BLOWS/FT.	DEPTH	SPOON BLOWS/6"	RE-COV'D	SAMP.[2] NO.	[3]SAMPLE DESCRIPTION AND REMARKS — LINE LOCATES CHANGE OF PROFILE	
	0			-	CONCRETE	0.0' 0.5'
HAND AUGER		HAND AUGER	FULL FEC.	1	Fill- dark brown c-f. SAND, trace silt little Gravel.	
				2	Fill- SAME	
					Fill- brown m-f. SAND, trace silt, tr. Gravel	
	5			3	Fill- SAME	
				4	FILL. SAME	7.0
					BOTTOM OF BORING	
	10				NOTE: ALL SAMPLES WERE SCREENED FOR VOC'S WITH A PID. S# 3 WAS SAVED AND THE REMAINING SAMPLES WERE DISCARDED.	
	15					
	20					
	25					

NOTES: 1 — Length recovered; 0" — Loss of Sample, T — Trap used
2 — U = undisturbed; A = auger; OER = open end rod; V = vane
3 — Log depth of change in color of wash water, loss of water, artesian water, sand heave in casing, etc.

THE PORT AUTHORITY OF N.Y & N.J.

ENGINEERING DEPARTMENT
MATERIALS ENGINEERING DIVISION
PID READINGS

PROJECT: JFK Building 125

BORING No. BI-3 DATE: 4/7/98

FIELD READINGS BY: Carlos L. Perez PID Model: Mini RAE

TIME	SAMPLE No.	IN-SITU Split Spoon Reading	HEAD-Space Reading	BREATHING Zone Reading	REMARKS
AM	1.	—	0.0	0	
	2	—	0.8	0	
	3	—	1.4	0	
	4	—	0.0	0	

THE PORT AUTHORITY OF N.Y & N.J.

ENGINEERING DEPARTMENT
MATERIALS ENGINEERING DIVISION
CHAIN OF CUSTODY RECORD

Sheet 3 of 3

PROJECT: JFK BUILDING 125

LOCATION: JFK FROM NORTH WALL 18' SOUTH FROM EAST WALL 13' EAST

DATE: 4/7/98

BORING No: BI-3

TOTAL No. OF SAMPLES: 1

SIGNATURE OF ALL PRESENT AT SAMPLING: Carlos J. Perez

RELINQUISHED BY (SIGN) Carlos J. Perez	DATE 4/7/98 TIME	RECEIVED BY (SIGN)
RELINQUISHED BY (SIGN)	DATE TIME	RECEIVED BY (SIGN)
RELINQUISHED BY (SIGN)	DATE TIME	RECEIVED BY LAB

REMARKS: 1 SAMPLE TAKEN IN 1 pt. JAR AND 1 VOA

PA 547
6-90

THE PORT AUTHORITY OF NY & NJ

Engineering Department
Construction Division
Materials Engineering Section

BORING REPORT

SHEET 1 OF 4

PROJECT	NAME OF CONTRACTOR	BORING NO	SURFACE ELEV.
JFK BUILDING 125	CRAIG	HW-BI-4	
LOCATION FROM EAST WALL 14' WEST AND FROM NORTH WALL ± 15' SOUTH		CONTRACT NO. 426-98-009	DATE 4/7 and 4/9/98

SPOON	CASING SIZE	HOLE TYPE
2" O.D. 1 3/8" I.D.	4" HW	4" MONITOR

HAMMER (SAFETY)	HAMMER
140 # FALL 30"	# FALL "

DRILLER: S. BOZNS

INSPECTOR 4/9: M. OUDEH / 4/7/98: CARLOS W. PEREZ

GROUND WATER LEVEL

Date	Time	Depth	Remarks
4/7			NO WATER WAS REACHED AT 7'
4/9	9:40 AM	7.4'	FOUND IN S#4

CASING BLOWS/FT.	DEPTH	SPOON BLOWS/6"	RE-COV'D	SAMP.[2] NO.	[3]SAMPLE DESCRIPTION AND REMARKS — LINE LOCATES CHANGE OF PROFILE
	0				0.0'
					CONCRETE 0.5'
					VOID 1.0'
HAND AUGER		HAND AUGER	FULL REC'V	1	FILL - dark brown c-f. SAND, trace silt, tr. gravel
				2	FILL - SAME
	5			3	FILL - brown m-f. SAND, trace silt, trace gravel.
		3-3 / 4-7	22"	4	FILL - brown-grey m-f. Sand, trace silt, trace gravel (FUEL FOUND IN THE SAMPLE)
	10	7-4 / 9-11	18"	5	SAME
		8-8 / 6-7	21"	6	FILL brown c-f Sand, trace silt, trace gravel 13.0'
	15				NOTE: All SAMPLES WERE SCREENED FOR VOC's with A PID. S#3 SAVED and the remaining were discarded.
	20				
					Bottom of Boring
	25				

NOTES: 1 — Length recovered; 0" — Loss of Sample, T — Trap used
2 — U = undisturbed; A = auger; OER = open end rod; V = vane
3 — Log depth of change in color of wash water, loss of water, artesian water, sand heave in casing, etc.

PORT AUTHORITY OF NY & NJ

Engineering Department - Materials Division

Well Installation Report

Sheet 2 of 4

PROJECT	CONTRACT NO
JFK BUILDING 125	426-98-009
LOCATION: FROM EAST WALL ±4' WEST AND FROM NORTH WALL ±15' SOUTH	CONTRACTOR: CRAIG

WELL NO	WELL TYPE	INSPECTOR	DRILLER	DATE
MW-B3-4	"A" MONITOR	M. OUDEH	S. BURNS	4/9/98

Well Development Report

(NOTE- WATER LEVEL READINGS FROM TOP OF PVC)

DATE	WATER LEVEL BEFORE	WATER LEVEL AFTER	TAKEN MINUTES AFTER
		N.A.	

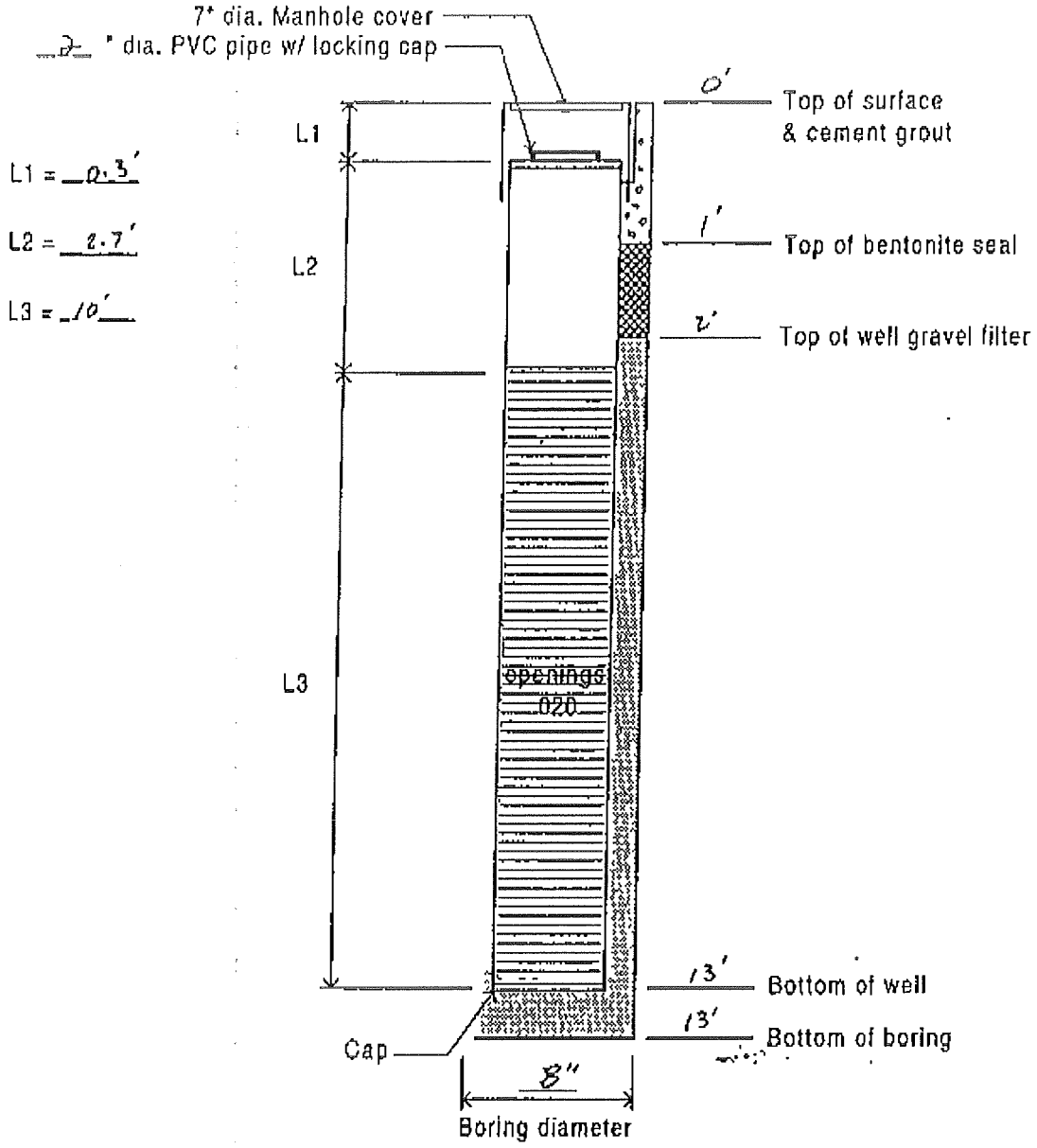

REMARKS

THE PORT AUTHORITY OF N.Y & N.J.

ENGINEERING DEPARTMENT
MATERIALS ENGINEERING DIVISION
PID READINGS

PROJECT: JFK BUILDING 125

BORING No. MW-BI-4 | DATE: 4/7/98 & 4/9/98

FIELD READINGS BY: CARLOS L. PEREZ | PID Model: MINI RAE

TIME	SAMPLE No.	IN-SITU Split Spoon Reading	HEAD-Space Reading	BREATHING Zone Reading	REMARKS
AM	1	–	1.5	0	–
↓	2	–	5.0	0	–
↓	3	–	55.0	0	FUEL ODOR.
4/9/98 AM	4	–	89.7	0	FUEL FOUND IN THE SAMPLE
↓	5	–	81.5	0	SAME
↓	6	–	4.5	0	–

THE PORT AUTHORITY OF N.Y & N.J.

ENGINEERING DEPARTMENT
MATERIALS ENGINEERING DIVISION
CHAIN OF CUSTODY RECORD

Sheet 4 of 4

PROJECT: JFK BUILDING 125

LOCATION: FROM EAST WALL ± 4' WEST AND FROM NORTH WALL ± 15' SOUTH

DATE: 4/7/98

BORING No: MW-BI-4

TOTAL No. OF SAMPLES: 1

SIGNATURE OF ALL PRESENT AT SAMPLING: Carlos J. Perez

RELINQUISHED BY (SIGN) Carlos J. Perez	DATE 4/7/98 TIME	RECEIVED BY (SIGN)
RELINQUISHED BY (SIGN)	DATE TIME	RECEIVED BY (SIGN)
RELINQUISHED BY (SIGN)	DATE TIME	RECEIVED BY LAB

REMARKS: 1 SAMPLE TAKEN IN 1 pt. JAR AND 1 VOA.

PA 547
6-90

THE PORT AUTHORITY OF NY & NJ

Engineering Department
Construction Division
Materials Engineering Section

BORING REPORT

SHEET 1 OF 3

PROJECT	NAME OF CONTRACTOR	BORING NO.	SURFACE ELEV.
JFK BUILDING 125	CRAIG	BI-5	
LOCATION FROM EAST WALL ± 4' WEST AND FROM SOUTH WALL ± 25' NORTH.		CONTRACT NO. 426-98-009	DATE 4/7/98

SPOON	CASING SIZE	HOLE TYPE
"O.D. "I.D.	HAND AUGER	I

HAMMER	HAMMER
# FALL "	# FALL "

DRILLER: S. BURNS

INSPECTOR: CARLOS L. PEREZ

GROUND WATER LEVEL

Date	Time	Depth	Remarks
4/7/98	PM	7.0'	TIP OF AUGER.

CASING BLOWS/FT.	DEPTH	SPOON BLOWS/6"	REC. COV'D	SAMP. NO.	SAMPLE DESCRIPTION AND REMARKS (LINE LOCATES CHANGE OF PROFILE)
	0				CONCRETE 0.0' 0.5'
HAND AUGER		HAND AUGER	FULL REC'V	1	FILL - dark brown c-f. SAND, trace silt, tr. GRAVEL.
				2	FILL: SAME
	5			3	FILL: brown m-f SAND, trace silt, trace GRAVEL
				4	FILL: SAME 7.0'
	10				BOTTOM OF BORING
	15				NOTE: ALL SAMPLES WERE SCREENED FOR VOC'S WITH A PID. S #4 WAS SAVED AND THE REMAINING SAMPLES WERE DISCARDED.
	20				
	26				

NOTES: 1 — Length recovered; 0" — Loss of Sample, T — Trap used
2 — U = undisturbed; A = auger; OER = open end rod; V = vane
3 — Log depth of change in color of wash water, loss of water, artesian water, sand heave in casing, etc.

THE PORT AUTHORITY OF N.Y & N.J.

ENGINEERING DEPARTMENT

MATERIALS ENGINEERING DIVISION

PID READINGS

PROJECT: JFK BUILDING 125

BORING No. BI-5 | DATE: 4/7/98

FIELD READINGS BY: CARLOS L. PEREZ | PID Model: MINI RAE

TIME	SAMPLE No.	IN-SITU Split Spoon Reading	HEAD-Space Reading	BREATHING Zone Reading	REMARKS
AM	1	–	0.4	0	
↓	2	–	0.4	0	
PM	3	–	0.0	0	
	4	–	0.0	0	

THE PORT AUTHORITY OF N.Y & N.J.

ENGINEERING DEPARTMENT
MATERIALS ENGINEERING DIVISION
CHAIN OF CUSTODY RECORD

Sheet 3 of 3

PROJECT: JFK BUILDING 125

LOCATION: FROM EAST WALL I 4' WEST AND FROM SOUTH WALL I 26' NORTH.

DATE: 4/7/98

BORING No: B I-5

TOTAL No OF SAMPLES: 1

SIGNATURE OF ALL PRESENT AT SAMPLING: Carlos J. Perez

RELINQUISHED BY (SIGN) Carlos J. Perez	DATE 4/7/98 TIME	RECEIVED BY (SIGN)
RELINQUISHED BY (SIGN)	DATE TIME	RECEIVED BY (SIGN)
RELINQUISHED (SIGN)	DATE TIME	RECEIVED BY LAB

REMARKS: 1 SAMPLE TAKEN IN 1 pt. JAR AND 1 VOA.

PA 547
6-90

THE PORT AUTHORITY OF NY & NJ

Engineering Department
Construction Division
Materials Engineering Section

BORING REPORT

SHEET 1 OF 3

PROJECT: JFK BUILDING 125	NAME OF CONTRACTOR: CRAIG	BORING NO.: BI-6	SURFACE ELEV.
LOCATION: FROM EAST WALL I 45' WEST AND FROM SOUTH WALL I 25' NORTH		CONTRACT NO.: 426-98-004	DATE: 4/7/98

SPOON	CASING SIZE	HOLE TYPE
"O.D. "I.D.	HAND AUGER	I
HAMMER # FALL "	HAMMER # FALL "	

DRILLER: S. BURNS

INSPECTOR: CARLOS L. PEREZ

GROUND WATER LEVEL

Date	Time	Depth	Remarks
4/7/98	PM	7.0'	TIP OF THE HAND AUGER.

CASING BLOWS/FT.	DEPTH	SPOON BLOWS/6"	RE-COV'D[1]	SAMP.[2] NO.	[3]SAMPLE DESCRIPTION AND REMARKS — LINE LOCATES CHANGE OF PROFILE
	0				0.0' CONCRETE 0.5'
HAND AUGER		HAND AUGER	FULL REC.	1	FILL brown c-f. SAND, little gravel, tr. silt
				2	FILL SAME (cobbles were found, difficult to hand auger)
	5			3	FILL- SAME
				4	FILL- Yellowish brown m-f. SAND, tr. silt, tr. gravel SAME 7.0'
	10				BOTTOM OF BORING
	15				NOTE: ALL SAMPLES WERE SCREENED FOR VOC'S WITH A PID. S#4 WAS SAVED AND THE REMAINING SAMPLES WERE DISCARDED.
	20				
	25				

NOTES: 1 — Length recovered; 0" — Loss of Sample, T — Trap used
2 — U = undisturbed; A = auger; OER = open end rod; V = vane
3 — Log depth of change in color of wash water, loss of water, artesian water, sand heave in casing, etc.

THE PORT AUTHORITY OF N.Y & N.J.

ENGINEERING DEPARTMENT
MATERIALS ENGINEERING DIVISION
HNU READINGS

PROJECT: JFK BUILDING 125

BORING No. BI-6 DATE: 4/7/98

FIELD READINGS BY: CARLOS L. PEREZ HNu Model: MINI RAE

TIME	SAMPLE No.	IN-SITU Split Spoon Reading	HEAD-Space Reading	BREATHING Zone Reading	REMARKS
PM	1	–	0.	0	
	2	–	0	0	
	3	–	1.4	0	
	4	–	1.5	0	

THE PORT AUTHORITY OF N.Y & N.J.

ENGINEERING DEPARTMENT
MATERIALS ENGINEERING DIVISION
CHAIN OF CUSTODY RECORD

Sheet 3 of 3

PROJECT: JFK BUILDING 125

LOCATION: FROM EAST WALL ± 45' WEST AND FROM SOUTH WALL ± 25' NORTH

DATE: 4/7/98

BORING No: B I - 6

TOTAL No. OF SAMPLES: 1

SIGNATURE OF ALL PRESENT AT SAMPLING: Carlos J. Perez

RELINQUISHED BY (SIGN) Carlos J. Perez	DATE 4/7/98 TIME	RECEIVED BY (SIGN)
RELINQUISHED BY (SIGN)	DATE TIME	RECEIVED BY (SIGN)
RELINQUISHED BY (SIGN)	DATE TIME	RECEIVED BY LAB

REMARKS: 1 SAMPLE TAKEN IN A 1 qt. JAR AND 1 VOA.

PA 547
6-90

THE PORT AUTHORITY OF NY & NJ

Engineering Department
Construction Division
Materials Engineering Section

BORING REPORT

SHEET 1 OF 3

PROJECT	NAME OF CONTRACTOR	BORING NO.	SURFACE ELEV.
JFK BUILDING 185.	CRAIG	B I - 7	

LOCATION	CONTRACT NO.	DATE
FROM EAST WALL ± 90' WEST AND FROM South WALL ± 25' North	426-98-009	4/7 - 4/8/98

SPOON	CASING SIZE	HOLE TYPE
"O.D. "I.D.	Hand Auger	I
HAMMER # FALL "	HAMMER # FALL "	

DRILLER: S. BURNS

INSPECTOR: Carlos Perez / Hazem Oudeh

GROUND WATER LEVEL

Date	Time	Depth	Remarks
4/8	8:30 AM	7.0'	FOUND in S#4

CASING BLOWS/FT.	DEPTH	SPOON BLOWS/6"	RE-COV'D	SAMP. NO.	SAMPLE DESCRIPTION AND REMARKS LINE LOCATES CHANGE OF PROFILE
	0				CONCRETE 0.10'
HAND AUGER		HAND AUGER	Full Recovery	1	Fill brown c-f SAND, trace silt, little GRAVEL 0.4'
					Fill olive c-f SAND, little silt, trace gravel
				2	Fill brown c-f SAND, little gravel, trace silt
	5			3	Fill brown-grey m-f SAND, trace silt, trace gravel
				4	SAME 7.0'
					NOTE! All SAMPLES WERE SCREENED FOR VOC's with A PID. S#4 SAVED and the REMAINING WERE DISCARDED.
	10				
	15				Bottom of Boring
	20				
	25				

NOTES: 1 — Length recovered; 0" — Loss of Sample, T — Trap used
2 — U = undisturbed; A = auger; OER = open end rod; V = vane
3 — Log depth of change in color of wash water, loss of water, artesian water, sand heave in casing, etc.

HNu2

THE PORT AUTHORITY OF N.Y & N.J.

ENGINEERING DEPARTMENT

MATERIALS ENGINEERING DIVISION

HNU READINGS

PROJECT: JFK BUILDING 125

BORING No. BI - 7 | DATES 4/7/98 - 4/8/98

FIELD READINGS BY: CARLOS L. PEREZ / M. ANDEH | HNu Model: HNU PAE

TIME	SAMPLE No.	IN-SITU Split Spoon Reading	HEAD-Space Reading	BREATHING Zone Reading	REMARKS
4/7 PM	1	–	0	0	
4/8 AM	2	–	0	0	
↓	3	–	0	0	
↓	4	–	0	0	

THE PORT AUTHORITY OF N.Y & N.J.

ENGINEERING DEPARTMENT
MATERIALS ENGINEERING DIVISION
CHAIN OF CUSTODY RECORD

Sheet 3 of 3

PROJECT: JFK BUILDING 125

LOCATION: ±90' WEST FROM THE EAST WALL AND ±25 NORTH FROM THE South WALL

DATE: 4-8-98

BORING No: BI-7

TOTAL No. OF SAMPLES: 1

SIGNATURE OF ALL PRESENT AT SAMPLING

RELINQUISHED BY (SIGN)		DATE 4/8/98 TIME	RECEIVED BY (SIGN)
RELINQUISHED BY (SIGN)		DATE TIME	RECEIVED BY (SIGN)
RELINQUISHED BY (SIGN)		DATE TIME	RECEIVED BY LAB

REMARKS: 1 Sample taken in 1 one pt. JAR & ~~[illegible]~~ JAR 1 VOA

A 547
6-90

THE PORT AUTHORITY OF NY & NJ

Engineering Department
Construction Division
Materials Engineering Section

BORING REPORT

SHEET 1 OF 3

PROJECT	NAME OF CONTRACTOR	BORING NO.	SURFACE ELEV.
JFK Building 125	Craig	BI-B	

LOCATION	CONTRACT NO.	DATE
± 18' East from West wall and ± 26' North from South wall	426-98-009	4-8-98

SPOON	CASING SIZE	HOLE TYPE
"O.D. "I.D.	Hand Auger	I
HAMMER # FALL "	HAMMER # FALL "	

DRILLER: S. Burns

INSPECTOR: N. Oudeh

GROUND WATER LEVEL

Date	Time	Depth	Remarks
4/8	9:30 Am	7.0'	Found in S#4

CASING BLOWS/FT.	DEPTH	SPOON BLOWS/6"	RE-COV'D	SAMP. NO.	SAMPLE DESCRIPTION AND REMARKS — LINE LOCATES CHANGE OF PROFILE
	0				Concrete Pavement 0.5'
Hand Auger		Hand Auger	Full recovery	1	Fill brown c-f Sand, little gravel, tr silt
				2	Same
	5			3	Fill brown, grey c-f sand, tr. gravel, tr. silt
				4	Same 7.0'
					NOTE: All samples screened for VOC's with a PID. S#4 saved and the remaining were discarded.
	10				
	15				Bottom of Boring
	20				
	25				

NOTES: 1 — Length recovered; 0" = Loss of Sample, T — Trap used
2 — U = undisturbed; A = auger; OER = open end rod; V = vane
3 — Log depth of change in color of wash water, loss of water, artesian water, sand heave in casing, etc.

THE PORT AUTHORITY OF N.Y & N.J.

ENGINEERING-DEPARTMENT
MATERIALS ENGINEERING DIVISION
PID READINGS

PROJECT: JFK BUILDING 125

BORING No. BI - B | DATE: 4-8-98

FIELD READINGS BY: H. OUDEH | PID Model: Mini RAE

TIME	SAMPLE No.	IN-SITU Split Spoon Reading	HEAD-Space Reading	BREATHING Zone Reading	REMARKS
AM	1	–	0	0	
↓	2	–	0	0	
	3	–	0	0	
	4	–	0	0	

THE PORT AUTHORITY OF N.Y & N.J.

ENGINEERING DEPARTMENT
MATERIALS ENGINEERING DIVISION
CHAIN OF CUSTODY RECORD

Sheet 3 of 3

PROJECT: JFK BUILDING 125

LOCATION: ±18' East FROM WEST WALL & ±26' North from South wall | DATE: 4-8-98

BORING No: BI-8 | TOTAL No OF SAMPLES: 1

SIGNATURE OF ALL PRESENT AT SAMPLING

RELINQUISHED BY (SIGN)	DATE 4-8-98 TIME	RECEIVED BY (SIGN)
RELINQUISHED BY (SIGN)	DATE TIME	RECEIVED BY (SIGN)
RELINQUISHED BY (SIGN)	DATE TIME	RECEIVED BY LAB

REMARKS: 1 sample taken in 1 one pt. JAR cond 1 vol

PA 547
6-90

THE PORT AUTHORITY OF NY & NJ

Engineering Department
Construction Division
Materials Engineering Section

BORING REPORT

SHEET 1 OF 3

PROJECT: JFK Building 125	NAME OF CONTRACTOR: CRAIG	BORING NO.: BI-9	SURFACE ELEV.:
LOCATION: ± 5' North from BI-9A		CONTRACT NO.: 426-98-004	DATE: 4/8/98

SPOON: "O.D. "I.D.
CASING SIZE: H.S. Augers
HOLE TYPE: I
HAMMER: # FALL
HAMMER: # FALL
DRILLER: S. Burns
INSPECTOR: M. Ogden

GROUND WATER LEVEL

Date	Time	Depth	Remarks
4/8/98	12 pm	7.0'	found in S#4

CASING BLOWS/FT.	DEPTH	SPOON BLOWS/6"	RE-COV'D[1]	SAMP.[2] NO.	[3]SAMPLE DESCRIPTION AND REMARKS LINE LOCATES CHANGE OF PROFILE
	0				Concrete 0.2'
Hand Auger		Hand Auger	Full recovery	1	Fill brown c-f sand, little gravel, trace silt
				2	Fill brown c-f sand, trace silt, trace gravel
	5			3	Fill brown m-f sand, trace gravel, trace silt
				4	Same 7.0'
					NOTE: All samples were screened for VOC's with a PID. S#4 saved and the remaining were discarded.
	10				
	15				Bottom of Boring
	20				
	25				

NOTES: 1 — Length recovered; 0" — Loss of Sample, T — Trap used
2 — U = undisturbed; A = auger; OER = open end rod; V = vane
3 — Log depth of change in color of wash water, loss of water, artesian water, sand heave in casing, etc.

THE PORT AUTHORITY OF N.Y & N.J.

ENGINEERING DEPARTMENT
MATERIALS ENGINEERING DIVISION
PID READINGS

PROJECT: JFK Building 125

BORING No. BI-9 | DATE: 4-8-98

FIELD READINGS BY: M. OUDEH | PID Model: Min. RAE

TIME	SAMPLE No.	IN-SITU Split Spoon Reading	HEAD-Space Reading	BREATHING Zone Reading	REMARKS
AM	1	–	0	0	
↓	2	–	0	0	
↓	3	–	0	0	
PM	4	–	0	0	

THE PORT AUTHORITY OF N.Y & N.J.

ENGINEERING DEPARTMENT
MATERIALS ENGINEERING DIVISION
CHAIN OF CUSTODY RECORD

Sheet 3 of 3

PROJECT: JFK BUILDING 125

LOCATION: ± 5' NORTH FROM BI-9A | DATE: 4-8-98

BORING No: BI-9 | TOTAL No. OF SAMPLES: 1

SIGNATURE OF ALL PRESENT AT SAMPLING

RELINQUISHED BY (SIGN) | DATE 4-8-98 TIME | RECEIVED BY (SIGN)

RELINQUISHED BY (SIGN) | DATE TIME | RECEIVED BY (SIGN)

RELINQUISHED BY (SIGN) | DATE TIME | RECEIVED BY LAB

REMARKS 1 Sample taken in 1 ane pl. JAR and ~~[illegible]~~ 1 VOA

PA 547
6-90

THE PORT AUTHORITY OF NY & NJ

Engineering Department
Construction Division
Materials Engineering Section

BORING REPORT

SHEET 1 OF 2

PROJECT	NAME OF CONTRACTOR	BORING NO.	SURFACE ELEV.
JFK BUILDING 125	CRAIG	BI-9A	
LOCATION FROM EAST WALL 4' WEST AND FROM NORTH WALL ±45' SOUTH.		CONTRACT NO. 426-98-009	DATE 4/7/98

SPOON	CASING SIZE	HOLE TYPE
"O.D. "I.D	1½ HAND AUGER	I

HAMMER	HAMMER
# FALL "	# FALL "

DRILLER: S BURNS

INSPECTOR: CARLOS L. PEREL

GROUND WATER LEVEL

Date	Time	Depth	Remarks

CASING BLOWS/FT.	DEPTH	SPOON BLOWS/6"	RE-COV'D[1]	SAMP.[2] NO.	[3]SAMPLE DESCRIPTION AND REMARKS — LINE LOCATES CHANGE OF PROFILE
	0				CONCRETE 0.0' / SOLID 0.5'
HAND AUGER		HAND AUGER	FULL REC'V.	1	FILL - dark brown c.f. SAND, tr. Silt, tr. Gravel
				2	FILL SAME 4.5'
	5				BOTTOM OF BORING
					NOTE: HIT OBSTRUCTION AT 4.5' SAMPLES WERE SCREENED FOR VOC'S AND DISCARDED.
	10				
	15				
	20				
	25				

NOTES: 1 — Length recovered; 0" — Loss of Sample, T — Trap used
2 — U = undisturbed; A = auger; OER = open end rod; V = vane
3 — Log depth of change in color of wash water, loss of water, artesian water, sand heave in casing, etc.

THE PORT AUTHORITY OF N.Y & N.J.

ENGINEERING DEPARTMENT

MATERIALS ENGINEERING DIVISION

PID READINGS

PROJECT: JFK BUILDING 125

BORING No. B-I - 9 DATE: 4/7/98

FIELD READINGS BY: CARLOS L. PEREZ PID Model: MINI RAE

TIME	SAMPLE No.	IN-SITU Split Spoon Reading	HEAD-Space Reading	BREATHING Zone Reading	REMARKS
AM	1	–	4.0	0	
↓	2	–	4.5	0	

PA 547
6-90

THE PORT AUTHORITY OF NY & NJ

Engineering Department
Construction Division
Materials Engineering Section

BORING REPORT

SHEET 1 OF 2

PROJECT	NAME OF CONTRACTOR	BORING NO.	SURFACE ELEV.
JFK BUILDING 125	CRAIG	BI-9B	
LOCATION: ± 3' N.W FROM BI-9A		CONTRACT NO. 426-98-009	DATE 4-8-98

SPOON	CASING SIZE	HOLE TYPE
"O.D. "I.D.	Hand Auger	I

HAMMER # FALL " | HAMMER # FALL "

DRILLER: S. BURNS

INSPECTOR: M. DUDEK

GROUND WATER LEVEL

Date	Time	Depth	Remarks

CASING BLOWS/FT.	DEPTH	SPOON BLOWS/6"	RE-COV'D	SAMP.[3] NO.	[1]SAMPLE DESCRIPTION AND REMARKS LINE LOCATES CHANGE OF PROFILE
	0				CONCRETE PAVEMENT 0.2'
Hand Auger		Hand Auger	Full Recovery	1	Fill brown c-f sand, little gravel, trace silt
				2	Fill Brown c-f Sand, tr. silt, tr. gravel
				3	Stone 4.6'
	5				NOTE: HIT OBSTRUCTION AT 9.6', RELOCATED THE Boring Hole. All Samples were Screened for VOC's with A PID and then Discarded.
	10				
	15				Bottom of Boring
	20				
	25				

NOTES: 1 — Length recovered; 0* = Loss of Sample, T — Trap used
2 — U = undisturbed; A = auger; OER = open end rod; V = vane
3 — Log depth of change in color of wash water, loss of water, artesian water, sand heave in casing, etc.

THE PORT AUTHORITY OF N.Y & N.J.

ENGINEERING DEPARTMENT

MATERIALS ENGINEERING DIVISION

PID READINGS

PROJECT: JFK BUILDING 125

BORING No. B1-98 | DATE: 4-8-98

FIELD READINGS BY: H. OUDEH | PID Model: Mini RAE

TIME	SAMPLE No.	IN-SITU Split Spoon Reading	HEAD-Space Reading	BREATHING Zone Reading	REMARKS
AM	1	–	0	0	
↓	2	–	0	0	
	3	–	0	0	

APPENDIX B

Well Purging and Field Sampling Results

April and May 1998 Results

THE PORT AUTHORITY OF N.Y. & N.J.

ENGINEERING DEPARTMENT
MATERIALS ENGINEERING DIVISION
MONITOR WELL DEVELOPMENT DATA SHEET

OBJECT: JFK BLDG 125 | JOB No.:
WELL LOCATION:
WELLPOINT No.: MW B1 4 | DATE: 05-06-98
STICK-UP DISTANCE: FLUSH feet | CASING DIAMETER: 2 inc
DEPTH OF WELL FROM TOP OF PIPE: 12.72

WELLPOINT DEPTH:

	TIME	DISTANCE FROM TOP OF PIPE TO: WATER, feet	OIL, feet
BEFORE DEVELOPMENT	10:52am	6.94	—
AFTER DEVELOPMENT	11:27AM	6.97	

VOLUME TO BE REMOVED:

DEPTH OF WELL		12.72	feet
DEPTH TO WATER	-	6.94	feet
DEPTH OF WATER COLUMN		5.78	feet
FACTOR *	X	0.618	liters / feet
VOLUME TO BE REMOVED		3.57	liters

WELL DEVELOPMENT:

NUMBER OF VOLUMES	TIME	pH	TEMP. degrees C	CONDUCTIVITY umohs / cm	SALINITY 0 / 00
1	11:08am	6.17	19.8°	338	0.1
2	11:14am	6.42	14.8°	342	0.15
3	11:19am		14.7°	336	0.1
4					
5					

SIGNATURES OF ALL PERSONS PRESENT:

REMARKS: WELL SAMPLED AT 11:23AM

* FACTOR = 0.618 FOR 2 INCH DIAMETER WELL CASING
* FACTOR = 2.471 FOR 4 INCH DIAMETER WELL CASING

THE PORT AUTHORITY OF N.Y & N.J.

ENGINEERING DEPARTMENT
MATERIALS ENGINEERING DIVISION
MONITOR WELL DEVELOPMENT DATA SHEET

PROJECT: SFK - Bldg 125 | JOB No.:
WELL LOCATION: MW - B04
WELLPOINT No.: | DATE: 4/28/98
STICK-UP DISTANCE: feet | CASING DIAMETER: 2 inch
DEPTH OF WELL FROM TOP OF PIPE: fe

WELLPOINT DEPTH:

	TIME	DISTANCE FROM TOP OF PIPE TO: WATER, feet	OIL, feet
BEFORE DEVELOPMENT	9:10	6.73	–
AFTER DEVELOPMENT	10:00	6.83	–

VOLUME TO BE REMOVED:

DEPTH OF WELL		11.81	feet
DEPTH TO WATER		6.73	feet
DEPTH OF WATER COLUMN		5.08	feet
FACTOR *	X	0.618	liters / feet
VOLUME TO BE REMOVED		3.14	liters

WELL DEVELOPMENT:

NUMBER OF VOLUMES	TIME	pH	TEMP. degrees C	CONDUCTIVITY umohs / cm	SALINITY 0/00
1	9:18	6.29	14.0	600	0.0
2	9:25	6.26	14.0	610	0.0
3	9:30	6.27	13.9	610	0.0
4					
5					

SIGNATURES OF ALL PERSONS PRESENT:

REMARKS: Well sampled 9:40
Duplicate collected 9:55

* FACTOR = 0.618 FOR 2 INCH DIAMETER WELL CASING
* FACTOR = 2.471 FOR 4 INCH DIAMETER WELL CASING

THE PORT AUTHORITY OF N.Y. & N.J.

ENGINEERING DEPARTMENT
MATERIALS ENGINEERING DIVISION
MONITOR WELL DEVELOPMENT DATA SHEET

PROJECT: JFK-Bldg 125 | JOB No.:
WELL LOCATION: MW-BO-2
WELLPOINT No.: | DATE: 4/28/98
STICK-UP DISTANCE: feet | CASING DIAMETER: 9 inch
DEPTH OF WELL FROM TOP OF PIPE: ft

WELLPOINT DEPTH:

	TIME	DISTANCE FROM TOP OF PIPE TO: WATER, feet	OIL, feet
BEFORE DEVELOPMENT	10:30	6.93	–
AFTER DEVELOPMENT	11:05	7.28	

VOLUME TO BE REMOVED:

DEPTH OF WELL		11.81	feet
DEPTH TO WATER	-	6.93	feet
DEPTH OF WATER COLUMN		4.88	feet
FACTOR *	X	0.618	liters / feet
VOLUME TO BE REMOVED		3.02	liters

WELL DEVELOPMENT:

NUMBER OF VOLUMES	TIME	pH	TEMP. degrees C	CONDUCTIVITY umohs / cm	SALINITY 0/00
1	10:35	6.46	14.9	380	0.0
2	10:39	6.42	13.9	400	0.0
3	10:44	6.41	13.8	400	0.0
4					
5					

SIGNATURES OF ALL PERSONS PRESENT:

REMARKS: Unable to open well cover / cement on bolts – opened manually

* FACTOR = 0.618 FOR 2 INCH DIAMETER WELL CASING
* FACTOR = 2.471 FOR 4 INCH DIAMETER WELL CASING

THE PORT AUTHORITY OF N.Y. & N.J.

ENGINEERING DEPARTMENT
MATERIALS ENGINEERING DIVISION
MONITOR WELL DEVELOPMENT DATA SHEET

ROJECT: JFK-Bldg 125 | JOB No.:
VELL LOCATION: MW-BO-8
VELLPOINT No.: | DATE: 4/28/98
TICK-UP DISTANCE: feet | CASING DIAMETER: 2 Inch
EPTH OF WELL FROM TOP OF PIPE: fe

WELLPOINT DEPTH:

	TIME	DISTANCE FROM TOP OF PIPE TO: WATER, feet	OIL, feet
BEFORE DEVELOPMENT	11:10	7.49	—
AFTER DEVELOPMENT	11:35	7.64	—

VOLUME TO BE REMOVED:

DEPTH OF WELL		12.92	feet
DEPTH TO WATER	-	7.49	feet
DEPTH OF WATER COLUMN		5.43	feet
FACTOR *	X	0.618	liters / feet
VOLUME TO BE REMOVED		3.36	liters

WELL DEVELOPMENT:

NUMBER OF VOLUMES	TIME	pH	TEMP. degrees C	CONDUCTIVITY umohs / cm	SALINITY 0 / 00
1	11:15	6.45	16.0	8,000	0.5
2	11:22	6.56	16.0	8,000	0.5
3	11:27	6.59	15.0	7,900	0.5
4					
5					

SIGNATURES OF ALL PERSONS PRESENT:

REMARKS:

* FACTOR = 0.618 FOR 2 INCH DIAMETER WELL CASING
* FACTOR = 2.471 FOR 4 INCH DIAMETER WELL CASING

THE PORT AUTHORITY OF N.Y. & N.J.

ENGINEERING DEPARTMENT
MATERIALS ENGINEERING DIVISION
MONITOR WELL DEVELOPMENT DATA SHEET

ROJECT: JFK-Bldg 125 | JOB No.:
VELL LOCATION: MW-BO-6
VELLPOINT No.: | DATE: 4/28/98
TICK-UP DISTANCE: feet | CASING DIAMETER: 2 inch
EPTH OF WELL FROM TOP OF PIPE: fe

WELLPOINT DEPTH:

	DISTANCE FROM TOP OF PIPE TO:		
	TIME	WATER, feet	OIL, feet
BEFORE DEVELOPMENT	11:45	6.88	—
AFTER DEVELOPMENT	12:05	6.91	

VOLUME TO BE REMOVED:

DEPTH OF WELL		12.75	feet
DEPTH TO WATER		6.88	feet
DEPTH OF WATER COLUMN		5.87	feet
FACTOR *	X	0.618	liters / feet
VOLUME TO BE REMOVED		3.63	liters

WELL DEVELOPMENT:

NUMBER OF VOLUMES	TIME	pH	TEMP. degrees C	CONDUCTIVITY umhos / cm	SALINITY 0 / 00
1	11:49	6.43	16.9	250	0
2	11:52	6.54	15.8	250	0
3	11:55	6.57	15.0	245	0
4					
5					

SIGNATURES OF ALL PERSONS PRESENT:

REMARKS:

* FACTOR = 0.618 FOR 2 INCH DIAMETER WELL CASING
* FACTOR = 2.471 FOR 4 INCH DIAMETER WELL CASING

THE PORT AUTHORITY OF N.Y. & N.J.

ENGINEERING DEPARTMENT
MATERIALS ENGINEERING DIVISION
MONITOR WELL DEVELOPMENT DATA SHEET

PROJECT: JFK-Bldg 125 | JOB No.:
WELL LOCATION: MW-80-1
WELLPOINT No.: | DATE: 4/28/98
STICK-UP DISTANCE: feet | CASING DIAMETER: inch
DEPTH OF WELL FROM TOP OF PIPE: fe

WELLPOINT DEPTH:

DISTANCE FROM TOP OF PIPE TO:

	TIME	WATER, feet	OIL, feet
BEFORE DEVELOPMENT	12:16	6.58	–
AFTER DEVELOPMENT	12:38	6.70	–

VOLUME TO BE REMOVED:

DEPTH OF WELL		11.80	feet
DEPTH TO WATER		6.58	feet
DEPTH OF WATER COLUMN		5.22	feet
FACTOR *	X	0.618	liters / feet
VOLUME TO BE REMOVED		3.23	liters

WELL DEVELOPMENT:

NUMBER OF VOLUMES	TIME	pH	TEMP. degrees C	CONDUCTIVITY umohs / cm	SALINITY 0/00
1	12:22	6.46	15.0	180	0
2	12:25	6.40	13.5	180	0
3	12:28	6.38	13.4	180	0
4					
5					

SIGNATURES OF ALL PERSONS PRESENT:

REMARKS:

* FACTOR = 0.618 FOR 2 INCH DIAMETER WELL CASING
* FACTOR = 2.471 FOR 4 INCH DIAMETER WELL CASING

October 1998 Results

JFK – BUILDING 125

10/5/98
A3-973.026

Well #	Depth To Product (feet)	Depth To Water (feet)	Sample Time
BO-1	8.32	8.33	11:01
BO-2	8.62	8.63	10:57
BI-4	8.31	10.15	10:42
BO-4	8.38	8.37	10:50
BO-6	9.21	9.22	11:05
BO-8	8.58	8.59	11:11

May 1999 Results

THE PORT AUTHORITY OF ...

ENGINEERING DEPARTMENT
MATERIALS ENGINEERING DIVISION
MONITOR WELL DEVELOPMENT DATA SHEET

...ECT: JFK BLDG 125	JOB No.: CA3-972.026
...LL LOCATION:	
...LLPOINT No.: MW B01	DATE: 5.7.89
...CK-UP DISTANCE: FLUSH feet	CASING DIAMETER: inches
...PTH OF WELL FROM TOP OF PIPE:	feet

...ELLPOINT DEPTH:

	TIME	DISTANCE FROM TOP OF PIPE TO: WATER, feet	OIL, feet
BEFORE DEVELOPMENT	11:20AM*		
AFTER DEVELOPMENT			

...OLUME TO BE REMOVED:

DEPTH OF WELL		feet
DEPTH TO WATER		feet
DEPTH OF WATER COLUMN		feet
FACTOR *	X	liters / feet
VOLUME TO BE REMOVED		liters

WELL DEVELOPMENT:

NUMBER OF VOLUMES	TIME	pH	TEMP. degrees C	CONDUCTIVITY umohs / cm	SALINITY 0 / 00
1					
2					
3					
4					
5					

SIGNATURES OF ALL PERSONS PRESENT:

R. Gill Jr.

REMARKS: Well not sampled. * Well destroyed.

* FACTOR = 0.618 FOR 2 INCH DIAMETER WELL CASING
* FACTOR = 2.471 FOR 4 INCH DIAMETER WELL CASING

THE PORT AUTHORITY OF N.Y. & N.J.

ENGINEERING DEPARTMENT
MATERIALS ENGINEERING DIVISION
MONITOR WELL DEVELOPMENT DATA SHEET

PROJECT: SFK BLDG 125 | JOB No.: CA3-972.026
WELL LOCATION: MW B04
WELLPOINT No.: FLUSH MW-B04 | DATE: 5.7.99
PICK-UP DISTANCE: FLUSH feet | CASING DIAMETER: 2 inche
DEPTH OF WELL FROM TOP OF PIPE: 11.83 fee

WELLPOINT DEPTH:

DISTANCE FROM TOP OF PIPE TO:

	TIME	WATER, feet	OIL, feet
BEFORE DEVELOPMENT	11:22AM	8.11	—
AFTER DEVELOPMENT	12:00PM	8.39	—

VOLUME TO BE REMOVED:

DEPTH OF WELL		11.83	feet
DEPTH TO WATER	-	8.11	feet
DEPTH OF WATER COLUMN		3.72	feet
FACTOR *	x	0.618	liters / feet
VOLUME TO BE REMOVED		2.30	liters

WELL DEVELOPMENT:

NUMBER OF VOLUMES	TIME	pH	TEMP. degrees C	CONDUCTIVITY umohs / cm	SALINITY 0 / 00
1	11:45AM	6.02	14.1	620	0.20
2	11:48AM	6.07	13.3	610	0.20
3	11:52AM	6.08	13.3°	610	0.20
4					
5					

SIGNATURES OF ALL PERSONS PRESENT:

R. [illegible]

REMARKS: well SAMPLED @ 11:55AM

* FACTOR = 0.618 FOR 2 INCH DIAMETER WELL CASING
* FACTOR = 2.471 FOR 4 INCH DIAMETER WELL CASING

THE PORT AUTHORITY OF N.Y. & N.J.

ENGINEERING DEPARTMENT
MATERIALS ENGINEERING DIVISION
MONITOR WELL DEVELOPMENT DATA SHEET

PROJECT: SFK BLDG 125 | JOB No.: CA3-972.026
WELL LOCATION: MW BO4
WELLPOINT No.: FLUSH MW-BO4 | DATE: 5.7.99
PICK-UP DISTANCE: FLUSH feet | CASING DIAMETER: 2 inche
DEPTH OF WELL FROM TOP OF PIPE: 11.83 fee

WELLPOINT DEPTH:

	TIME	DISTANCE FROM TOP OF PIPE TO: WATER, feet	OIL, feet
BEFORE DEVELOPMENT	11:22AM	8.11	—
AFTER DEVELOPMENT	12:00PM	8.39	—

VOLUME TO BE REMOVED:

DEPTH OF WELL		11.83	feet
DEPTH TO WATER	-	8.11	feet
DEPTH OF WATER COLUMN		3.72	feet
FACTOR *	x	0.618	liters / feet
VOLUME TO BE REMOVED		2.30	liters

WELL DEVELOPMENT:

NUMBER OF VOLUMES	TIME	pH	TEMP. degrees C	CONDUCTIVITY umohs / cm	SALINITY 0 / 00
1	11:45AM	6.02	14.1	620	0.20
2	11:48AM	6.07	13.3	610	0.20
3	11:52AM	6.08	13.3°	610	0.20
4					
5					

SIGNATURES OF ALL PERSONS PRESENT:

R. [illegible]

REMARKS: well SAMPLED @ 11:55AM

* FACTOR = 0.618 FOR 2 INCH DIAMETER WELL CASING
* FACTOR = 2.471 FOR 4 INCH DIAMETER WELL CASING

THE PORT AUTHORITY

ENGINEERING DEPARTMENT
MATERIALS ENGINEERING DIVISION
MONITOR WELL DEVELOPMENT DATA SHEET

PROJECT: JFK BLDG 125 | JOB No.: CA3 972 026
WELL LOCATION:
WELLPOINT No.: ~~FLUSH~~ MW-BD6 | DATE: 5-7-99
PICK-UP DISTANCE: FLUSH 0 feet | CASING DIAMETER: 2 inche
DEPTH OF WELL FROM TOP OF PIPE: 12.76 fee

WELLPOINT DEPTH:

	TIME	DISTANCE FROM TOP OF PIPE TO: WATER, feet	OIL, feet
BEFORE DEVELOPMENT	1:37 pm	8.33	N/A
AFTER DEVELOPMENT	2:10 pm	8.34	

VOLUME TO BE REMOVED:

DEPTH OF WELL		12.76	feet
DEPTH TO WATER	-	8.33	feet
DEPTH OF WATER COLUMN		4.43	feet
FACTOR *	X	0.618	liters / feet
VOLUME TO BE REMOVED		2.7	liters

WELL DEVELOPMENT:

NUMBER OF VOLUMES	TIME	pH	TEMP. degrees C	CONDUCTIVITY umohs / cm	SALINITY 0 / 00
1	1:40	6.93	14.3	433	0.30
2	1:45	6.97	14.2	430	0.30
3	1:50	6.95	14.2	458	0.30
4					
5					

SIGNATURES OF ALL PERSONS PRESENT:

R. [illegible] T. [illegible]

REMARKS: Well sampled @ 1:55
Note: Slight Sheen in water.

* FACTOR = 0.618 FOR 2 INCH DIAMETER WELL CASING
* FACTOR = 2.471 FOR 4 INCH DIAMETER WELL CASING

THE PORT AUTHORITY OF ...

ENGINEERING DEPARTMENT
MATERIALS ENGINEERING DIVISION
MONITOR WELL DEVELOPMENT DATA SHEET

CT: JFK BLDG 125 | JOB No.: CA3-972-026

ELL LOCATION:

ELLPOINT No.: MW-80-8 | DATE: 5.7.99

TICK-UP DISTANCE: FLUSH 0 feet | CASING DIAMETER: 2 inches

EPTH OF WELL FROM TOP OF PIPE: 12.07 feet

WELLPOINT DEPTH:

	TIME	DISTANCE FROM TOP OF PIPE TO: WATER, feet	OIL, feet
BEFORE DEVELOPMENT	1:02 pm	8.93	N/A
AFTER DEVELOPMENT	1:35 pm	8.97	

VOLUME TO BE REMOVED:

DEPTH OF WELL	12.07	feet
DEPTH TO WATER	8.93	feet
DEPTH OF WATER COLUMN	3.14	feet
FACTOR *	X 0.618	liters / feet
VOLUME TO BE REMOVED	1.9	liters

WELL DEVELOPMENT:

NUMBER OF VOLUMES	TIME	pH	TEMP. degrees C	CONDUCTIVITY umohs / cm	SALINITY 0 / 00
1	1:05	7.00	13.0	470	0.60
2	1:10	6.85	13.0	470	0.60
3	1:15	6.85	13.1	468	0.60
4					
5					

SIGNATURES OF ALL PERSONS PRESENT:

R. Gill Jr / T. Rya

EMARKS: Well SAMPLED @ 1:20 pm

* FACTOR = 0.618 FOR 2 INCH DIAMETER WELL CASING

* FACTOR = 2.471 FOR 4 INCH DIAMETER WELL CASING

THE PORT AUTHORITY OF N.Y. & N.J.

ENGINEERING DEPARTMENT
MATERIALS ENGINEERING DIVISION
MONITOR WELL DEVELOPMENT DATA SHEET

OJECT: JFK WDG 125 | JOB No.: CAT-979.026
ELL LOCATION: Inside Bldg.
ELLPOINT No.: MW B1-4 | DATE: 5-7-99
ICK-UP DISTANCE: FLUSH feet | CASING DIAMETER: 2" inches
PTH OF WELL FROM TOP OF PIPE: 12.70 feet

VELLPOINT DEPTH:

	TIME	DISTANCE FROM TOP OF PIPE TO: WATER, feet	OIL, feet
BEFORE DEVELOPMENT	12:05 PM	8.30	—
AFTER DEVELOPMENT	12:50 PM	8.31	—

OLUME TO BE REMOVED:

DEPTH OF WELL	12.70	feet
DEPTH TO WATER	8.30	feet
DEPTH OF WATER COLUMN	4.40	feet
FACTOR *	X 0.618	liters / feet
VOLUME TO BE REMOVED	2.7	liters

WELL DEVELOPMENT:

UMBER OF VOLUMES	TIME	pH	TEMP. degrees C	CONDUCTIVITY umohs / cm	SALINITY 0 / 00
1	12:15	6.26	15.2	810	1.0
2	12:20	6.45	15.3	900	1.0
3	12:25	6.48	15.5	1050	1.0
4	12:30	6.53	15.5	1080	1.0
5					

IGNATURES OF ALL PERSONS PRESENT:
R. Gill Jr. / T. Rizzo

EMARKS: well SAMPLED @ 12:32 PM
DUPLICATE TAKEN @ 12:42 PM (MW DUP)
: Slight Sheen & odor detected.

* FACTOR = 0.618 FOR 2 INCH DIAMETER WELL CASING
* FACTOR = 2.471 FOR 4 INCH DIAMETER WELL CASING

T.R

ENGINEERING DEPARTMENT
MATERIALS ENGINEERING DIVISION
MONITOR WELL DEVELOPMENT DATA SHEET

JFK-BUILDING 125

PROJECT: JFK - [redacted] | JOB No.: [redacted]

WELL LOCATION:

WELLPOINT No.: MW-BO-2 | DATE: 5/12/99

STICK-UP DISTANCE: feet [redacted] | CASING DIAMETER: in

DEPTH OF WELL FROM TOP OF PIPE: 11.78

WELLPOINT DEPTH:

	TIME	DISTANCE FROM TOP OF PIPE TO: WATER, feet	OIL, feet
BEFORE DEVELOPMENT	12:45	8.30	—
AFTER DEVELOPMENT			

VOLUME TO BE REMOVED:

DEPTH OF WELL		11.78	feet
DEPTH TO WATER	-	8.30	feet
DEPTH OF WATER COLUMN		3.48	feet
FACTOR *	x	0.618	liters / feet
VOLUME TO BE REMOVED		2.15	liters 0.56 gal

WELL DEVELOPMENT:

NUMBER OF VOLUMES	TIME	pH	TEMP. degrees C	CONDUCTIVITY umohs / cm	SALINITY 0 / 00
1	12 59 p	6.52	15.4	380	0.01
2	101	6.54	14.0	400	0.02
3	1.04	6.60	13.3	390	0.01
4	1.20 p	6.65	13.3	400	0.01
5					

SIGNATURES OF ALL PERSONS PRESENT:

T. Ryan

REMARKS:

* FACTOR = 0.618 FOR 2 INCH DIAMETER WELL CASING
* FACTOR = 2.471 FOR 4 INCH DIAMETER WELL CASING

Killam

Environmental Engineering Unit
Aviation Design Division

John F. Kennedy International Airport
Building 204

Environmental Subsurface Baseline Investigation

March 2000

Environmental Engineering Unit
Aviation Design Division

John F. Kennedy International Airport Building 204

Environmental Subsurface Baseline Investigation

Final Report

March 2000

TABLE OF CONTENTS

EXECUTIVE SUMMARY 1

1.0 INTRODUCTION 2

1.1 Site Location and Description 2

1.2 Geological Background 2

1.3 Objective of the Baseline Investigation 3

2.0 FIELD PROCEDURES AND SAMPLING METHODOLOGY 4

2.1 Soil Boring and Monitoring Well Installation 4

2.2 Sampling Methodology 4

2.2.1 Soils 5

2.2.2 Groundwater 5

3.0 INVESTIGATION RESULTS 6

3.1 Site Hydrogeology 6

3.2 Analytical Results 6

3.2.1 Soils 6

3.2.2 Groundwater 8

4.0 SUMMARY 9

TABLE OF CONTENTS (cont'd)

List of Figures

Figure 1 ..... Site Location Map
Figure 2 ..... Monitoring Well Locations
Figure 3 ..... Groundwater Contour Map

List of Tables

Table 1 ..... Monitoring Well/Bore Hole Installation Data Summary
Table 2 ..... Monitoring Well Gauging Summary and Groundwater Table Elevations
Table 3 ..... Soil Boring Testing Results Summary
Table 4 ..... Surface Soil Analytical Data Results
Table 5 ..... Subsurface Soil Analytical Data Results
Table 6 ..... Ground Water Analytical Data Results

List of Appendices

Appendix A ..... Survey Results, Soil Boring Logs, Well Construction Data
Appendix B ..... Well Purging and Field Sampling Results

EXECUTIVE SUMMARY

Killam Associates has conducted a subsurface baseline investigation of Building 204 at John F. Kennedy International Airport (JFKIA) on behalf of the Port Authority of New York and New Jersey (Port Authority). The site was utilized by Ogden Aviation Services International (Ogden) to supply El Al Airlines with food and refreshment items. The investigation included drilling soil borings, installing monitoring wells and collecting soil and groundwater samples for laboratory analysis.

A total of 10 soil borings were drilled. Five of the ten borings were completed as permanent monitoring wells. Soil and groundwater samples were collected and analyzed for total petroleum hydrocarbons (TPHC), the constituents of the EPA Priority Pollutants plus 40 list (PP+40) including total xylenes, methyl-tertiary-butyl ether (MTBE), and tertiary butyl alcohol (TBA).

The complete laboratory reports are included under separate cover.

Laboratory analyses of soils indicate the presence of metal compounds throughout the site. Base neutral fraction and pesticide compounds were detected sporadically across the site and typically these compounds were limited to the surface soils. Low concentrations of PCBs were detected in two samples. Soils in the area of the former fuel pump island and near the former underground storage tank (UST) area have been impacted by petroleum contamination. In addition, the concentrations of base neutral compounds, primarily from the polynuclear aromatic hydrocarbon (PAH) group, were also detected at the southwestern corner of the site.

Laboratory analyses of the groundwater samples indicate the presence of TPHC and MTBE downgradient of the former gasoline UST area.

1.0 INTRODUCTION

This report summarizes the baseline subsurface environmental investigation performed at the Building 204 at JFKIA. The report includes a description of the site and its background, a discussion of field activities and analytical results, and a summary of the investigation's findings.

1.1 Site Locations and Description

The site investigated is located in the northern area of JFKIA on 150th Avenue between 147th and 148th Streets. It is bounded by a parking lot and Building 124 to the north; 148th Street and Building 110 to the east; 150th Avenue to the south; and 147th Street and Building 89 to the west.

The site is comprised of a single story building and an asphalt parking lot. The single story building is approximately 2,800 square feet in size and constructed with concrete block. The building is located at the approximate center of the property and is surrounded by the asphalt parking lot. The entrance to the site is from 147th Street and grass and landscaped lawn areas are located to the north and south of the entrance way and extend along perimeter of the site on 148th Street and 150th Avenue.

The closest residential area is Laurelton, Queens located approximately one-quarter mile to the north. The site location is depicted on Figure 1, the Site Location Map.

Ogden began utilizing the site in 1987. Building 204 served as a warehouse for items that included tea, coffee, napkins, cups, liquor, sugar and utensils. A fleet of seven to nine trucks was parked at the facility and was utilized to transport goods to the El Al ramp

In July 1995, Ogden removed four USTs used to store gasoline. A pump island was located north of the building and the USTs were located to the eastern portion of the site. A report dated December 1995, prepared by Ogden's consultant, indicated free phase and dissolved hydrocarbons were present in the vicinity of the former fuel pump island. The report recommended further investigation and evaluation for remedial actions and was submitted to the New York State Department of Environmental Conservation (NYSDEC). Following the UST removals, Ogden refueled the vehicles from another Ogden site located at JFKIA

Prior to Ogden's use of the site, National Car Rental utilized the site.

1.2 Geological Background

In general, the soils found beneath JFKIA consist of a top layer of fine to medium sand to a depth of approximately seven to ten feet below grade. This brown and gray sand originated from Jamaica Bay and was hydraulically placed prior to the development of the airport in the 1940's. Underlying the fill in most areas is a layer of relatively

impermeable organic soils. This layer varies from two to seven feet in thickness and is made up of intermittent layers of organic peat and gray organic silt and clays. This is the original marsh soil that covered most of JFKIA prior to airport development. Beneath the organic material is a stratum of glacial outwash. In areas where the organic layer exists, a perched water table can be found at approximately six feet below grade. In other areas, the groundwater is eight to ten feet below grade and generally flows south towards Jamaica Bay.

Beneath the Building 204 site, the organic peat layer was not encountered. The soil is composed of fine to medium brown and gray sand that contains some gravel, cobbles and a trace amount of silt that exist from the surface to at least 14 feet below grade. The groundwater table is located approximately nine feet below grade at the site. The direction of groundwater flow at the site is toward the south.

1.3 Objective of the Baseline Investigation

The baseline investigation establishes existing concentrations of various compounds in the subsurface soils and groundwater and notes any elevated levels of compounds that may be associated with past operations at or near the site. The results of the baseline investigation may be included in future lease negotiations.

2.0 FIELD PROCEDURES AND SAMPLING METHODOLOGY

Soil borings and monitoring wells were installed at the site to collect soil and groundwater samples. All work was performed in accordance with the Port Authority's "Field Standard Operating Procedures Manual" and in conformance with NYSDEC and U.S. EPA requirements. This section describes the procedures for soil borings and well installation and the methods employed during sampling activities.

2.1 Soil Borings and Monitoring Well Installation

Ten soil borings were drilled at the site between December 16 and December 21, 1999. Five borings were completed as permanent monitoring wells. The Port Authority identified proposed soil boring locations during a site visit and from utility drawings. The locations of the borings were finalized during field installation after field screening of obstructions and utility clearance. After installation, a Port Authority Construction Engineering representative surveyed the soil boring and the monitoring well locations for elevations and location coordinates.

The boreholes were installed as per ASTM standard protocol using a drill rig equipped with 6-inch inside diameter (I.D.) hollow-stem augers. Before drilling each borehole, all downhole equipment was decontaminated to protect against cross-contamination. Monitoring wells were installed and developed according to Port Authority's guidelines for unconfined, unconsolidated monitoring well installation and development procedures. The wells are constructed of a 2-inch I.D., flush-joint, polyvinyl chloride (PVC) casing with a 0.020-inch machine slotted well screen and were installed so the screens intercept the groundwater table. All wells were finished with a flush-mounted curb box with an 8-inch diameter steel manhole cover set in concrete. All wellheads are equipped with locking caps.

Craig Drilling performed all drilling and monitoring well installation. A Port Authority Materials Engineering representative was present during all drilling activities to log soil lithology, note any visible signs of contamination, screen and collect soil samples, ensure that standard drilling and well installation protocols were followed, and complete Boring Logs and Well Installation Reports.

The monitoring well locations are shown on Figure 2. Table 1 presents a summary of the soil boring and well installation data, including survey coordinates. Survey results, drilling logs and well construction data are presented in Appendix A.

2.2 Sampling Methodology

This section describes the field methods used to screen and collect soil samples from the boreholes and collect groundwater samples from the monitoring wells. Sufficient volume of each media was collected for each sample to allow for laboratory analysis of TPHC and the constituents on the EPA PP140 List including total xylenes, MTBE and TBA. These analyses were chosen based on the past use of the site and the use of USTs to store

gasoline for Ogden's vehicles. Contamination was detected in soil and groundwater samples collected following the removal of the USTs in 1995.

2.2.1 Soils

Soils from each borehole were sampled at two-foot intervals, from the surface to a depth from 10 feet to 14 feet below grade, using a split-spoon sampler. At each interval, from ground level to the bottom of the boring, the samples were placed in jars and screened for total ionizable vapors using an HNu photoionization detector (PID).

The sample exhibiting the highest PID reading in each borehole and the sample just below the surface (0.5 ft. to 1.0 ft.) were submitted to a laboratory for chemical analysis. If no vapors were detected with a PID meter, the sample collected from the interval immediately above the groundwater table was submitted for analysis. A total of 20 soil samples, 1 duplicate sample, and 4 field blanks were submitted for analysis. The soils boring reports in Appendix A indicate which soil samples from each borehole were submitted for laboratory analysis.

2.2.2 Groundwater

A Port Authority Materials Engineering representative gauged and sampled the monitoring wells installed at the site. Monitoring well gauging was performed to determine the groundwater table elevation. A total of 5 groundwater samples, 1 duplicate sample, and 1 field blank and 1 trip blank were collected for chemical analysis.

A phase interface probe was used to gauge the depth to groundwater and to detect free product in the wells. The total well depth was also measured. The probe is accurate to within 0.01 feet. The measurements were taken relative to the surveyed top of casing elevation of each well. The probe was decontaminated before gauging each well. Table 2 summarizes the data generated by the well gauging activities, including groundwater table elevations.

After the gauging activity, each well was purged and sampled with dedicated, disposable bailers. Three to four well casing volumes were purged before sampling. After each well volume was removed, pH, temperature, conductivity, and salinity were measured and recorded. These data are included in Appendix B on the monitoring well development data sheets. The data collected from the gauging event was used to generate the groundwater contour map presented on Figure 3.

3.0 INVESTIGATION RESULTS

This section describes the findings of the baseline investigation. Site hydrogeology is discussed and analytical results for soil and groundwater samples are presented.

3.1 Site Hydrogeology

The groundwater at JFKIA is known to flow generally south towards Jamaica Bay. The groundwater table at the site is relatively flat, with an average gradient of 0.0007 feet per foot. The groundwater elevation across the site ranges from 9.01 feet to 9.28 feet and local groundwater flow is in a southeasterly direction. The groundwater contour map is shown on Figure 3.

3.2 Analytical Results

Soil and groundwater samples collected from the site were analyzed for TPHC and constituents on the EPA PP+40 List, including total xylenes, MTBE and TBA.

3.2.1 Soils

During field screening of the soil samples with a PID, ionizable organic vapors were not detected in any of the borings. The PID readings of the soil samples are summarized on Table 3. The soil samples submitted for laboratory analysis are noted on the soil boring logs in Appendix A.

A total of twenty soil samples were collected during the investigation. Two samples were collected from each borehole. The soil sample in the interval two feet below grade and the sample immediately above the water table were collected for laboratory analysis. The exception was boring BH204-4/MW-3 where the sample exhibiting the highest PID reading (in the 4 ft. to 6 ft. interval) and the sample in the interval two feet below grade were submitted for analysis.

The volatile organic compound (VOC) methlylene chloride was detected in all the samples from 0.0033 mg/kg to 0.0091 mg/kg. Methylene chloride was also detected in the blank indicating that its presence may be due to laboratory contamination. MTBE was detected in sample BH-204-7 S-5 at 0.22 mg/kg.

The SVOCs, primarily PAHs, were detected at low concentrations sporadically across the site. The following compounds were detected:

- benzo[a]anthracene detected in 6 samples 0.039 mg/kg to 0.82 mg/kg
- benzo[a]pyrene detected in 4 samples 0.042 mg/kg to 0.95 mg/kg
- benzo[b]fluoranthene detected in 6 samples 0.041 mg/kg to 1.7 mg/kg
- benzo[g,h,i]perylene detected in 3 samples 0.035 mg/kg to 0.84 mg/kg
- benzo[k]fluoranthene detected in 2 samples 0.059 mg/kg to 0.65 mg/kg
- bis(2-ethylhexyl)phthalate detected in 6 samples 0.037 mg/kg to 0.18 mg/kg

- chrysene detected in 5 samples 0.041 mg/kg to 1.0 mg/kg
- fluoranthene detected in 7 samples 0.037 mg/kg to 1.2 mg/kg
- indeno[1,2,3-cd]pyrene detected in 3 samples 0.036 mg/kg to 0.76 mg/kg
- phenanthrene detected in 3 samples 0.043 mg/kg to 0.39 mg/kg
- pyrene detected in 6 samples 0.045 mg/kg to 0.93 mg/kg
- di-n-butylphthalate detected in 6 samples 0.04 mg/kg to 0.088 mg/kg
- 4,6-dinitro-2-methylphenol detected in 2 samples 0.042 mg/kg to 0.39 mg/kg

The following SVOCs were detected in only one soil sample:

- 2,4-dinitrophenol detected at 0.17 mg/kg
- anthracene detected at 0.06 mg/kg
- butylbenzyphthalate detected at 0.039 mg/kg
- carbazole detected at 0.061 mg/kg
- di-n-octylphthalate detected at 0.043 mg/kg

The PCB Aroclor-1260 was detected in two samples at 0.049 mg/kg and 0.82 mg/kg.

The following pesticides were detected sporadically across the site:

- dieldrin detected in 1 sample at 0.038 mg/kg
- heptachlor detected in 1 sample at 0.0049 mg/kg
- methoxychlor detected in 1 sample at 0.0056 mg/kg
- p,p'-DDD detected in 2 samples 0.069 mg/kg and 0.66 mg/kg
- p,p'-DDE detected in 6 samples 0.005 mg/kg to 2.7 mg/kg
- p,p'-DDT detected in 5 samples 0.0045 mg/kg to 1.7 mg/kg

The following metals were detected throughout the site at the noted concentrations:

- arsenic 2.1 mg/kg – 15 mg/kg
- barium 12 mg/kg – 54 mg/kg
- chromium 4 mg/kg – 14 mg/kg
- copper 4.8 mg /kg – 31 mg/kg
- lead 4 mg/kg – 73 mg/kg
- mercury 0.039 mg/kg – 0.24 mg/kg
- nickel 4 mg/kg – 19 mg/kg
- zinc 19 mg/kg – 81 mg/kg

Antimony was detected in one sample at 1.7 mg/kg.

Cyanide and phenols were not detected in any soil samples

TPHC were detected in sixteen samples from 37 mg/kg to 180 mg/kg.

Tables 4 and 5 summarize the results of the analyses of the soil samples

3.2.2 Groundwater

During gauging activities free phase product was not detected in the monitoring wells.

The VOC methylene chloride was detected in all of the samples and in the blank indicating that its presence may be due to laboratory contamination. Chloroform was detected in two samples at 1.8 ug/l and 27 ug/l. MTBE was detected in two samples at 1.8 ug/l and 1,800 ug/l.

The SVOCs detected in the groundwater samples were the phthalate compounds. Diethylphthalate was detected in four samples ranging in concentration from 3.7 ug/l to 7.5 ug/l. However, this compound was also detected in the blank and may be a laboratory induced contaminant. Bis(2-ethylhexyl)phthalate was detected in MW-3 at 2 ug/l.

The following metals were detected in all of the samples:

- barium 28 ug/l – 610 ug/l
- chromium 12 ug/l – 230 ug/l
- nickel 21 ug/l – 290 ug/l
- zinc 40 ug/l – 330 ug/l

Lead was detected in four samples ranging from 10 ug/l to 150 ug/l.

Arsenic was detected in MW-1 at 21 ug/l and MW-4 at 19 ug/l. Copper was detected in MW-1 at 120 ug/l and MW-4 at 190 ug/l.

Mercury was detected in sample MW-1 at 0.5 ug/l.

Cyanide, phenols and PCBs were not detected in any samples.

The pesticide p,p'-DDT was detected in MW-2 at 0.19 ug/l and MW-4 at 0.17 ug/l.

TPHC was detected in sample MW-5 at 1.1 mg/l.

The results of the laboratory analysis of the groundwater samples are summarized in Table 6.

4.0 SUMMARY

The results of the baseline investigation performed at Building 204, the site of the former Ogden Aviation Services International, indicates that the soils and the groundwater have been slightly impacted by petroleum related compounds. In the soils, this appears to be in the surface samples and limited to the area around the former fuel pump island and at the southwestern corner of the property. In the groundwater, it appears limited to the area downgradient of the former USTs.

FIGURES

TABLES

Table 1
John F. Kennedy International Airport
Building 204
Baseline Investigation
Monitoring Well/Bore Hole Installation Data Summary

Well /Bore Hole Identification	Installation Date	Well/Bore Hole Depth	Surface Elevation	Well Casing Elevation	Survey Coordinates	
					South	East
204-MW-1	12/16/99	13.71	13.81	13.49	52199	66177
204-MW-2	12/20/99	13.77	13.89	13.55	52294	66202
204-MW-3	12/17/99	13.42	13.86	13.52	52234	66353
204-MW-4	12/17/99	13.77	13.92	13.60	52439	66281
204-MW-5	12/17/99	13.85	13.97	13.66	52398	66350
BH204-2	12/20/99	10.0	13.86	--	52335	66219
BH204-5	12/21/99	10.0	13.47	--	52285	66322
BH204-6	12/20/99	10.0	13.87	--	52279	66287
BH204-7	12/20/99	10.0	13.61	--	52335	66346
BH204-8	12/21/99	10.0	13.72	--	52394	66306

Notes: 1. All measurements are in feet

Table 2
John F. Kennedy International Airport
Building 204
Baseline Investigation
Monitoring Well Gauging Data Summary and Groundwater Table Elevations

Well Identification	Date Gauged	Depth of Well	Depth to Water	Well Casing Elevation	Groundwater Elevation
204-MW-1	12/27/99	13.71	9.01	13.49	4.48
204-MW-2	12/27/99	13.77	9.08	13.55	4.47
204-MW-3	12/27/99	13.42	9.01	13.52	4.51
204-MW-4	12/27/99	13.77	9.24	13.60	4.36
204-MW-5	12/27/99	13.85	9.28	13.66	4.38

Notes: 1. All measurements are in feet

Table 3
John F. Kennedy International Airport
Building 204
Baseline Investigation
Soil Boring Testing Results Summary

Well /Bore Hole Identification	Hnu Photoionization Readings of Soils					
	0 to 2'	2' to 4'	4' to 6'	6' to 8'	8' to 10'	10' to 12' or >
204-MW-1	0	0	0	0	0	0
204-MW-2	0	0	0	0	0	0
204-MW-3	0	0	0	0	0	0
204-MW-4	0	0	0	0	0	0
204-MW-5	0	0	0	0	0	0
BH204-2	0	0	0	0	0	–
BH204-5	0	0	0	0	0	–
BH204-6	0	0	0	0	0	–
BH204-7	0	0	0	0	0	–
BH204-8	0	0	0	0	0	–

Notes: 1. All measurements are based upon headspace screening
2. Results are reported in parts per million (ppm)

Table 4 A
Surface Soil Analytical Data Results
Building 204
JFK International Airport, New York

CAS #	Analyte	Client Sample ID:	BH-204-1/MW-1 S-1	BH-204-4/MW-3 S-1	BH-204-4/MW-3 S-1 D	BH-204-9/MW-4 S-1	BH-204-10/MW-5 S-1
		Veritech Sample ID:	AA99700	AA99704	AA99706	AA99707	AA99709
		Sampling Date:	12/16/99	12/17/99	12/17/99	12/17/99	12/17/99
		Units:	MG/KG	MG/KG	MG/KG	MG/KG	MG/KG
630-20-6	1,1,1,2-Tetrachloroethane		0.0011 U	0.0011 U	0.0011 U	0.0011 U	0.001 U
71-55-6	1,1,1-Trichloroethane		0.0053 U	0.0053 U	0.0053 U	0.0054 U	0.0052 U
79-34-5	1,1,2,2-Tetrachloroethane		0.0053 U	0.0053 U	0.0053 U	0.0054 U	0.0052 U
79-00-5	1,1,2-Trichloroethane		0.0053 U	0.0053 U	0.0053 U	0.0054 U	0.0052 U
75-34-3	1,1-Dichloroethane		0.0053 U	0.0053 U	0.0053 U	0.0054 U	0.0052 U
75-35-4	1,1-Dichloroethene		0.0053 U	0.0053 U	0.0053 U	0.0054 U	0.0052 U
95-50-1	1,2-Dichlorobenzene		0.0053 U	0.0053 U	0.0053 U	0.0054 U	0.0052 U
107-06-2	1,2-Dichloroethane		0.0053 U	0.0053 U	0.0053 U	0.0054 U	0.0052 U
78-87-5	1,2-Dichloropropane		0.0053 U	0.0053 U	0.0053 U	0.0054 U	0.0052 U
541-73-1	1,3-Dichlorobenzene		0.0053 U	0.0053 U	0.0053 U	0.0054 U	0.0052 U
106-46-7	1,4-Dichlorobenzene		0.0053 U	0.0053 U	0.0053 U	0.0054 U	0.0052 U
78-93-3	2-Butanone		0.027 U	0.027 U	0.026 U	0.027 U	0.026 U
110-75-8	2-Chloroethylvinylether		0.0053 U	0.0053 U	0.0053 U	0.0054 U	0.0052 U
591-78-6	2-Hexanone		0.021 U	0.021 U	0.021 U	0.022 U	0.021 U
108-10-1	4-Methyl-2-Pentanone		0.021 U	0.021 U	0.021 U	0.022 U	0.021 U
67-64-1	Acetone		0.021 U	0.021 U	0.021 U	0.022 U	0.021 U
107-02-8	Acrolein		0.016 U	0.016 U	0.016 U	0.016 U	0.016 U
107-13-1	Acrylonitrile		0.0074 U	0.0074 U	0.0073 U	0.0075 U	0.0072 U
71-43-2	Benzene		0.0011 U	0.0011 U	0.0011 U	0.0011 U	0.001 U
75-27-4	Bromodichloromethane		0.0053 U	0.0053 U	0.0053 U	0.0054 U	0.0052 U
75-25-2	Bromoform		0.0053 U	0.0053 U	0.0053 U	0.0054 U	0.0052 U
74-83-9	Bromomethane		0.0053 U	0.0053 U	0.0053 U	0.0054 U	0.0052 U
75-15-0	Carbon Disulfide		0.0053 U	0.0053 U	0.0053 U	0.0054 U	0.0052 U
56-23-5	Carbon Tetrachloride		0.0053 U	0.0053 U	0.0053 U	0.0054 U	0.0052 U
108-90-7	Chlorobenzene		0.0053 U	0.0053 U	0.0053 U	0.0054 U	0.0052 U
75-00-3	Chloroethane		0.0053 U	0.0053 U	0.0053 U	0.0054 U	0.0052 U
67-66-3	Chloroform		0.0053 U	0.0053 U	0.0053 U	0.0054 U	0.0052 U
74-87-3	Chloromethane		0.0053 U	0.0053 U	0.0053 U	0.0054 U	0.0052 U
156-59-2	cis-1,2-Dichloroethene		0.0053 U	0.0053 U	0.0053 U	0.0054 U	0.0052 U
10061-01-5	cis-1,3-Dichloropropene		0.0053 U	0.0053 U	0.0053 U	0.0054 U	0.0052 U
108-20-3	di-Isopropyl-ether		0.0053 U	0.0053 U	0.0053 U	0.0054 U	0.0052 U
124-48-1	Dibromochloromethane		0.0053 U	0.0053 U	0.0053 U	0.0054 U	0.0052 U
100-41-4	Ethylbenzene		0.0011 U	0.0011 U	0.0011 U	0.0011 U	0.001 U
108-38-3	M&P-Xylenes		0.0021 U	0.0021 U	0.0021 U	0.0022 U	0.0021 U
1634-04-4	Methyl-t-butyl ether		0.0011 U	0.0011 U	0.0011 U	0.0011 U	0.001 U
75-09-2	Methylene Chloride		0.0069	0.0036 J	0.0038 J	0.0066	0.004 J
95-47-6	O-Xylene		0.0011 U	0.0011 U	0.0011 U	0.0011 U	0.001 U
100-42-5	Styrene		0.0011 U	0.0011 U	0.0011 U	0.0011 U	0.001 U
75-65-0	t-Butyl Alcohol		0.011 U	0.011 U	0.011 U	0.011 U	0.01 U
127-18-4	Tetrachloroethene		0.0053 U	0.0053 U	0.0053 U	0.0054 U	0.0052 U
108-88-3	Toluene		0.0011 U	0.0011 U	0.0011 U	0.0011 U	0.001 U
156-60-5	trans-1,2-Dichloroethene		0.0053 U	0.0053 U	0.0053 U	0.0054 U	0.0052 U
10061-02-6	trans-1,3-Dichloropropene		0.0053 U	0.0053 U	0.0053 U	0.0054 U	0.0052 U
79-01-6	Trichloroethene		0.0053 U	0.0053 U	0.0053 U	0.0054 U	0.0052 U
75-69-4	Trichlorofluoromethane		0.0053 U	0.0053 U	0.0053 U	0.0054 U	0.0052 U
108-05-4	Vinyl Acetate		0.011 U	0.011 U	0.011 U	0.011 U	0.01 U
75-01-4	Vinyl Chloride		0.0053 U	0.0053 U	0.0053 U	0.0054 U	0.0052 U

MG/KG Milligrams per Kilogram
UG/L Micrograms per Liter
U Not detected at the Method Detection Limit (MDL)/Practical Quantitation Level (PQL), value is shown adjacent to U
J. Analyte detected below MDL/PQL and is estimated

Table 4 A
Surface Soil Analytical Data Results
Building 204
JFK International Airport, New York

CAS #	Analyte	Client Sample ID:	BH-204-3/MW-2 S-1	BH-204-2 S-1	BH-204-6 S-1	BH-204-7 S-1	BH-204-5 S-1	BH-204-8 S-1
		Veritech Sample ID:	AA99926	AA99928	AA99930	AA99932	AA99994	AA99996
		Sampling Date:	12/20/99	12/20/99	12/20/99	12/20/99	12/21/99	12/21/99
		Units:	MG/KG	MG/KG	MG/KG	MG/KG	MG/KG	MG/KG
630-20-6	1,1,1,2-Tetrachloroethane		0.001 U	0.0011 U	0.0011 U	0.0011 U	0.0011 U	0.001 U
71-55-6	1,1,1-Trichloroethane		0.0052 U	0.0053 U	0.0053 U	0.0053 U	0.0053 U	0.0052 U
79-34-5	1,1,2,2-Tetrachloroethane		0.0052 U	0.0053 U	0.0053 U	0.0053 U	0.0053 U	0.0052 U
79-00-5	1,1,2-Trichloroethane		0.0052 U	0.0053 U	0.0053 U	0.0053 U	0.0053 U	0.0052 U
75-34-3	1,1-Dichloroethane		0.0052 U	0.0053 U	0.0053 U	0.0053 U	0.0053 U	0.0052 U
75-35-4	1,1-Dichloroethene		0.0052 U	0.0053 U	0.0053 U	0.0053 U	0.0053 U	0.0052 U
95-50-1	1,2-Dichlorobenzene		0.0052 U	0.0053 U	0.0053 U	0.0053 U	0.0053 U	0.0052 U
107-06-2	1,2-Dichloroethane		0.0052 U	0.0053 U	0.0053 U	0.0053 U	0.0053 U	0.0052 U
78-87-5	1,2-Dichloropropane		0.0052 U	0.0053 U	0.0053 U	0.0053 U	0.0053 U	0.0052 U
541-73-1	1,3-Dichlorobenzene		0.0052 U	0.0053 U	0.0053 U	0.0053 U	0.0053 U	0.0052 U
106-46-7	1,4-Dichlorobenzene		0.0052 U	0.0053 U	0.0053 U	0.0053 U	0.0053 U	0.0052 U
78-93-3	2-Butanone		0.026 U	0.027 U	0.026 U	0.027 U	0.026 U	0.026 U
110-75-8	2-Chloroethylvinylether		0.0052 U	0.0053 U	0.0053 U	0.0053 U	0.0053 U	0.0052 U
591-78-6	2-Hexanone		0.021 U	0.021 U	0.021 U	0.021 U	0.021 U	0.021 U
108-10-1	4-Methyl-2-Pentanone		0.021 U	0.021 U	0.021 U	0.021 U	0.021 U	0.021 U
67-64-1	Acetone		0.021 U	0.021 U	0.021 U	0.021 U	0.021 U	0.021 U
107-02-8	Acrolein		0.015 U	0.016 U	0.016 U	0.016 U	0.016 U	0.016 U
107-13-1	Acrylonitrile		0.0071 U	0.0074 U	0.0073 U	0.0074 U	0.0073 U	0.0072 U
71-43-2	Benzene		0.001 U	0.0011 U	0.0011 U	0.0011 U	0.0011 U	0.001 U
75-27-4	Bromodichloromethane		0.0052 U	0.0053 U	0.0053 U	0.0053 U	0.0053 U	0.0052 U
75-25-2	Bromoform		0.0052 U	0.0053 U	0.0053 U	0.0053 U	0.0053 U	0.0052 U
74-83-9	Bromomethane		0.0052 U	0.0053 U	0.0053 U	0.0053 U	0.0053 U	0.0052 U
75-15-0	Carbon Disulfide		0.0052 U	0.0053 U	0.0053 U	0.0053 U	0.0053 U	0.0052 U
56-23-5	Carbon Tetrachloride		0.0052 U	0.0053 U	0.0053 U	0.0053 U	0.0053 U	0.0052 U
108-90-7	Chlorobenzene		0.0052 U	0.0053 U	0.0053 U	0.0053 U	0.0053 U	0.0052 U
75-00-3	Chloroethane		0.0052 U	0.0053 U	0.0053 U	0.0053 U	0.0053 U	0.0052 U
67-66-3	Chloroform		0.0052 U	0.0053 U	0.0053 U	0.0053 U	0.0053 U	0.0052 U
74-87-3	Chloromethane		0.0052 U	0.0053 U	0.0053 U	0.0053 U	0.0053 U	0.0052 U
156-59-2	cis-1,2-Dichloroethene		0.0052 U	0.0053 U	0.0053 U	0.0053 U	0.0053 U	0.0052 U
10061-01-5	cis-1,3-Dichloropropene		0.0052 U	0.0053 U	0.0053 U	0.0053 U	0.0053 U	0.0052 U
108-20-3	di-Isopropyl-ether		0.0052 U	0.0053 U	0.0053 U	0.0053 U	0.0053 U	0.0052 U
124-48-1	Dibromochloromethane		0.0052 U	0.0053 U	0.0053 U	0.0053 U	0.0053 U	0.0052 U
100-41-4	Ethylbenzene		0.001 U	0.0011 U	0.0011 U	0.0011 U	0.0011 U	0.001 U
108-38-3	M&P-Xylenes		0.0021 U	0.0021 U	0.0021 U	0.0021 U	0.0021 U	0.0021 U
1634-04-4	Methyl-t-butyl ether		0.001 U	0.0011 U	0.0011 U	0.0011 U	0.0011 U	0.001 U
75-09-2	Methylene Chloride		0.0065	0.0091	0.0064	0.0071	0.01 B	0.0038 JB
95-47-6	O-Xylene		0.001 U	0.0011 U	0.0011 U	0.0011 U	0.0011 U	0.001 U
100-42-5	Styrene		0.001 U	0.0011 U	0.0011 U	0.0011 U	0.0011 U	0.001 U
75-65-0	t-Butyl Alcohol		0.01 U	0.011 U	0.011 U	0.011 U	0.011 U	0.01 U
127-18-4	Tetrachloroethene		0.0052 U	0.0053 U	0.0053 U	0.0053 U	0.0053 U	0.0052 U
108-88-3	Toluene		0.001 U	0.0011 U	0.0011 U	0.0011 U	0.0011 U	0.001 U
156-60-5	trans-1,2-Dichloroethene		0.0052 U	0.0053 U	0.0053 U	0.0053 U	0.0053 U	0.0052 U
10061-02-6	trans-1,3-Dichloropropene		0.0052 U	0.0053 U	0.0053 U	0.0053 U	0.0053 U	0.0052 U
79-01-6	Trichloroethene		0.0052 U	0.0053 U	0.0053 U	0.0053 U	0.0053 U	0.0052 U
75-69-4	Trichlorofluoromethane		0.0052 U	0.0053 U	0.0053 U	0.0053 U	0.0053 U	0.0052 U
108-05-4	Vinyl Acetate		0.01 U	0.011 U	0.011 U	0.011 U	0.011 U	0.01 U
75-01-4	Vinyl Chloride		0.0052 U	0.0053 U	0.0053 U	0.0053 U	0.0053 U	0.0052 U

MG/KG Milligrams per Kilogram
UG/L: Micrograms per Liter
U Not detected at the Method Detection Limit (MDL)/Practical Quantitation Level (PQL) value is shown adjacent to U
J: Analyte detected below MDL/PQL and is estimated

Table 4 A
Surface Soil Analytical Data Results
Building 204
JFK International Airport, New York

CAS #	Analyte	Units:	Client Sample ID: FB 12/16	FB 12/17	FB 12/20	FB 12/21
		Veritech Sample ID:	AA99702	AA99703	AA99934	AA99998
		Sampling Date:	12/16/99	12/17/99	12/20/99	12/21/99
			UG/L	UG/L	UG/L	UG/L
630-20-6	1,1,1,2-Tetrachloroethane		1 U	1 U	1 U	1 U
71-55-6	1,1,1-Trichloroethane		5 U	5 U	5 U	5 U
79-34-5	1,1,2,2-Tetrachloroethane		5 U	5 U	5 U	5 U
79-00-5	1,1,2-Trichloroethane		5 U	5 U	5 U	5 U
75-34-3	1,1-Dichloroethane		5 U	5 U	5 U	5 U
75-35-4	1,1-Dichloroethene		5 U	5 U	5 U	5 U
95-50-1	1,2-Dichlorobenzene		5 U	5 U	5 U	5 U
107-06-2	1,2-Dichloroethane		5 U	5 U	5 U	5 U
78-87-5	1,2-Dichloropropane		5 U	5 U	5 U	5 U
541-73-1	1,3-Dichlorobenzene		5 U	5 U	5 U	5 U
106-46-7	1,4-Dichlorobenzene		5 U	5 U	5 U	5 U
78-93-3	2-Butanone		25 U	25 U	25 U	25 U
110-75-8	2-Chloroethylvinylether		5 U	5 U	5 U	5 U
591-78-6	2-Hexanone		20 U	20 U	20 U	20 U
108-10-1	4-Methyl-2-Pentanone		20 U	20 U	20 U	20 U
67-64-1	Acetone		20 U	20 U	20 U	20 U
107-02-8	Acrolein		15 U	15 U	15 U	15 U
107-13-1	Acrylonitrile		1 8 U	1 8 U	1 8 U	1 8 U
71-43-2	Benzene		1 U	1 U	1 U	1 U
75-27-4	Bromodichloromethane		5 U	5 U	5 U	5 U
75-25-2	Bromoform		5 U	5 U	5 U	5 U
74-83-9	Bromomethane		5 U	5 U	5 U	5 U
75-15-0	Carbon Disulfide		5 U	5 U	5 U	5 U
56-23-5	Carbon Tetrachloride		5 U	5 U	5 U	5 U
108-90-7	Chlorobenzene		5 U	5 U	5 U	5 U
75-00-3	Chloroethane		5 U	5 U	5 U	5 U
67-66-3	Chloroform		5 U	5 U	5 U	5 U
74-87-3	Chloromethane		5 U	5 U	5 U	5 U
156-59-2	cis-1 2-Dichloroethene		5 U	5 U	5 U	5 U
10061-01-5	cis-1,3-Dichloropropene		5 U	5 U	5 U	5 U
108-20-3	di-Isopropyl-ether		5 U	5 U	5 U	5 U
124-48-1	Dibromochloromethane		5 U	5 U	5 U	5 U
100-41-4	Ethylbenzene		1 U	1 U	1 U	1 U
108-38-3	M&P-Xylenes		2 U	2 U	2 U	2 U
1634-04-4	Methyl-t-butyl ether		1 U	1 U	1 U	1 U
75-09-2	Methylene Chloride		5 U	5 U	3 6 J	1 3 J
95-47-6	O-Xylene		1 U	1 U	1 U	1 U
100-42-5	Styrene		1 U	1 U	1 U	1 U
75-65-0	t-Butyl Alcohol		10 U	10 U	10 U	10 U
127-18-4	Tetrachloroethene		5 U	5 U	5 U	5 U
108-88-3	Toluene		1 U	1 U	1 U	1 U
156-60-5	trans-1,2-Dichloroethene		5 U	5 U	5 U	5 U
10061 02-6	trans-1,3-Dichloropropene		5 U	5 U	5 U	5 U
79-01-6	Trichloroethene		5 U	5 U	5 U	5 U
75-69-4	Trichlorofluoromethane		5 U	5 U	5 U	5 U
108-05-4	Vinyl Acetate		10 U	10 U	10 U	10 U
75-01-4	Vinyl Chloride		5 U	5 U	5 U	5 U

MG/KG Milligrams per Kilogram
UG/L Micrograms per Liter
U Not detected at the Method Detection Limit (MDL)/Practical Quantitation Level (PQL), value is shown adjacent to U
J: Analyte detected below MDL/PQL and is estimated

Table 4 B
Surface Soil Analytical Data Results
Building 204
JFK International Airport, New York

	Client Sample ID.	BH-204-1/MW-1 S-1	BH-204-4/MW-3 S-1	BH-204-4/MW-3 S-1 D	BH-204-9/MW-4 S-1	BH-204-10/MW-5 S-1
	Veritech Sample ID.	AA99700	AA99704	AA99705	AA99707	AA99709
	Sampling Date	12/16/99	12/17/99	12/17/99	12/17/99	12/17/99
CAS #	Analyte Units.	MG/KG	MG/KG	MG/KG	MG/KG	MG/KG
120-82-1	1,2,4-Trichlorobenzene	0.18 U	0.18 U	0.18 U	0.18 U	0.17 U
95-50-1	1,2-Dichlorobenzene	0.18 U	0.18 U	0.18 U	0.18 U	0.17 U
122-66-7	1,2-Diphenylhydrazine	0.035 U	0.035 U	0.035 U	0.036 U	0.035 U
541-73-1	1,3-Dichlorobenzene	0.18 U	0.18 U	0.18 U	0.18 U	0.17 U
106-46-7	1,4-Dichlorobenzene	0.18 U	0.18 U	0.18 U	0.18 U	0.17 U
95-95-4	2,4,5-Trichlorophenol	0.18 U	0.18 U	0.18 U	0.18 U	0.17 U
88-06-2	2,4,6-Trichlorophenol	0.18 U	0.18 U	0.18 U	0.18 U	0.17 U
120-83-2	2,4-Dichlorophenol	0.18 U	0.18 U	0.18 U	0.18 U	0.17 U
105-67-9	2,4-Dimethylphenol	0.18 U	0.18 U	0.18 U	0.18 U	0.17 U
51-28-5	2,4-Dinitrophenol	0.35 U	0.35 U	0.35 U	0.36 U	0.17 J
121-14-2	2,4-Dinitrotoluene	0.18 U	0.18 U	0.18 U	0.18 U	0.17 U
606-20-2	2,6-Dinitrotoluene	0.18 U	0.18 U	0.18 U	0.18 U	0.17 U
91-58-7	2-Chloronaphthalene	0.18 U	0.18 U	0.18 U	0.18 U	0.17 U
95-57-8	2-Chlorophenol	0.18 U	0.18 U	0.18 U	0.18 U	0.17 U
91-57-6	2-Methylnaphthalene	0.18 U	0.18 U	0.18 U	0.18 U	0.17 U
95-48-7	2-Methylphenol	0.18 U	0.18 U	0.18 U	0.18 U	0.17 U
88-74-4	2-Nitroaniline	0.18 U	0.18 U	0.18 U	0.18 U	0.17 U
88-75-5	2-Nitrophenol	0.18 U	0.18 U	0.18 U	0.18 U	0.17 U
106-44-5	3&4-Methylphenol	0.18 U	0.18 U	0.18 U	0.18 U	0.17 U
91-94-1	3,3'-Dichlorobenzidine	0.18 U	0.18 U	0.18 U	0.18 U	0.17 U
99-09-2	3-Nitroaniline	0.18 U	0.18 U	0.18 U	0.18 U	0.17 U
131-14-2	4,6-Dinitro-2-methylphenol	0.18 U	0.18 U	0.18 U	0.18 U	0.38
101-55-3	4-Bromophenyl-phenylether	0.18 U	0.18 U	0.18 U	0.18 U	0.17 U
59-50-7	4-Chloro-3-methylphenol	0.18 U	0.18 U	0.18 U	0.18 U	0.17 U
106-47-8	4-Chloroaniline	0.18 U	0.18 U	0.18 U	0.18 U	0.17 U
7005-72-3	4-Chlorophenyl-phenylether	0.18 U	0.18 U	0.18 U	0.18 U	0.17 U
100-01-6	4-Nitroaniline	0.18 U	0.18 U	0.18 U	0.18 U	0.17 U
100-02-7	4-Nitrophenol	0.18 U	0.18 U	0.18 U	0.18 U	0.17 U
83-32-9	Acenaphthene	0.18 U	0.18 U	0.18 U	0.18 U	0.17 U
208-96-8	Acenaphthylene	0.18 U	0.18 U	0.18 U	0.18 U	0.17 U
120-12-7	Anthracene	0.18 U	0.18 U	0.18 U	0.06 J	0.17 U
92-87-5	Benzidine	0.35 U	0.35 U	0.35 U	0.36 U	0.35 U
56-55-3	Benzo[a]anthracene	0.041 J	0.042 J	0.037 J	0.82	0.17 U
50-32-8	Benzo[a]pyrene	0.18 U	0.18 U	0.18 U	0.95	0.17 U
205-99-2	Benzo[b]Fluoranthene	0.041 J	0.052 J	0.18 U	1.7	0.17 U
191-24-2	Benzo[g,h,i]perylene	0.18 U	0.18 U	0.18 U	0.84	0.17 U
207-08-9	Benzo[k]Fluoranthene	0.18 U	0.18 U	0.18 U	0.65	0.17 U
65-85-0	Benzoic Acid	0.35 U	0.35 U	0.35 U	0.36 U	0.35 U
100-51-6	Benzyl Alcohol	0.18 U	0.18 U	0.18 U	0.18 U	0.17 U
111-91-1	Bis(2-Chloroethoxy)Methane	0.18 U	0.18 U	0.18 U	0.18 U	0.17 U
111-44-4	Bis(2-Chloroethyl)ether	0.18 U	0.18 U	0.18 U	0.18 U	0.17 U
108-60-1	Bis(2-Chloroisopropyl)ether	0.18 U	0.18 U	0.18 U	0.18 U	0.17 U
117-81-7	Bis(2-Ethylhexyl)phthalate	0.18 U	0.18 U	0.18 U	0.18 U	0.17 U
85-68-7	Butylbenzylphthalate	0.18 U	0.18 U	0.18 U	0.18 U	0.17 U
86-74-8	Carbazole	0.18 U	0.18 U	0.18 U	0.001 J	0.17 U
218-01-9	Chrysene	0.044 J	0.18 U	0.18 U	1	0.17 U
84-74-2	Di-n-butylphthalate	0.088 J	0.18 U	0.18 U	0.042 J	0.17 U
117-84-0	Di-n-octylphthalate	0.18 U	0.18 U	0.18 U	0.18 U	0.17 U
53-70-3	Dibenzo[a,h]anthracene	0.18 U	0.18 U	0.18 U	0.18 U	0.17 U
132-64-9	Dibenzofuran	0.18 U	0.18 U	0.18 U	0.18 U	0.17 U
84-66-2	Diethylphthalate	0.18 U	0.18 U	0.18 U	0.18 U	0.17 U
131-11-3	Dimethylphthalate	0.18 U	0.18 U	0.18 U	0.18 U	0.17 U
206-44-0	Fluoranthene	0.069 J	0.049 J	0.048 J	1.2	0.17 U
86-73-7	Fluorene	0.18 U	0.18 U	0.18 U	0.18 U	0.17 U
118-74-1	Hexachlorobenzene	0.18 U	0.18 U	0.18 U	0.18 U	0.17 U
87-68-3	Hexachlorobutadiene	0.18 U	0.18 U	0.18 U	0.18 U	0.17 U
77-47-4	Hexachlorocyclopentadiene	0.53 U	0.53 U	0.53 U	0.54 U	0.52 U
67-72-1	Hexachloroethane	0.18 U	0.18 U	0.18 U	0.18 U	0.17 U
193-39-5	Indeno[1,2,3-cd]pyrene	0.18 U	0.18 U	0.18 U	0.76	0.17 U
78-59-1	Isophorone	0.18 U	0.18 U	0.18 U	0.18 U	0.17 U
621-64-7	N-Nitroso-Di-N-Propylamine	0.18 U	0.18 U	0.18 U	0.18 U	0.17 U
62-75-9	N-Nitrosodimethylamine	0.18 U	0.18 U	0.18 U	0.18 U	0.17 U
86-30-6	N-Nitrosodiphenylamine	0.18 U	0.18 U	0.18 U	0.18 U	0.17 U
91-20-3	Naphthalene	0.18 U	0.18 U	0.18 U	0.18 U	0.17 U
98-95-3	Nitrobenzene	0.18 U	0.18 U	0.18 U	0.18 U	0.17 U
87-86-5	Pentachlorophenol	0.18 U	0.18 U	0.18 U	0.18 U	0.17 U
85-01-8	Phenanthrene	0.043 J	0.18 U	0.18 U	0.39	0.17 U
108-95-2	Phenol	0.18 U	0.18 U	0.18 U	0.18 U	0.17 U
129-00-0	Pyrene	0.066 J	0.045 J	0.046 J	0.93	0.17 U
110-86-1	Pyridine	0.53 U	0.53 U	0.53 U	0.54 U	0.52 U

MG/KG Milligrams per Kilogram
U Not detected at the Method Detection Limit (MDL)/Practical Quantitation Level (PQL), value is adjacent to U
J Analyte detected below MDL/PQL and is estimated

Table 4 B
Surface Soil Analytical Data Results
Building 204
JFK International Airport, New York

CAS #	Analyte	Units	BH-204-3/MW-2 S-1	BH-204-2 S-1	BH-204-6 S-1	BH-204-7 S-1	BH-204-5 S-1	BH-204-8 S-1
	Client Sample ID		BH-204-3/MW-2 S-1	BH-204-2 S-1	BH-204-6 S-1	BH-204-7 S-1	BH-204-5 S-1	BH-204-8 S-1
	Veritech Sample ID		AA99926	AA99928	AA99930	AA99932	AA99994	AA99996
	Sampling Date		12/20/99	12/20/99	12/20/99	12/20/99	12/21/99	12/21/99
			MG/KG	MG/KG	MG/KG	MG/KG	MG/KG	MG/KG
120-82-1	1,2,4-Trichlorobenzene		0.17 U	0.18 U	0.18 U	0.18 U	0.18 U	0.17 U
95-50-1	1,2-Dichlorobenzene		0.17 U	0.18 U	0.18 U	0.18 U	0.18 U	0.17 U
122-66-7	1,2-Diphenylhydrazine		0.034 U	0.035 U	0.035 U	0.035 U	0.035 U	0.035 U
541-73-1	1,3-Dichlorobenzene		0.17 U	0.18 U	0.18 U	0.18 U	0.18 U	0.17 U
106-46-7	1,4-Dichlorobenzene		0.17 U	0.18 U	0.18 U	0.18 U	0.18 U	0.17 U
95-95-4	2,4,5-Trichlorophenol		0.17 U	0.18 U	0.18 U	0.18 U	0.18 U	0.17 U
88-06-2	2,4,6-Trichlorophenol		0.17 U	0.18 U	0.18 U	0.18 U	0.18 U	0.17 U
120-83-2	2,4-Dichlorophenol		0.17 U	0.18 U	0.18 U	0.18 U	0.18 U	0.17 U
105-67-9	2,4-Dimethylphenol		0.17 U	0.18 U	0.18 U	0.18 U	0.18 U	0.17 U
51-28-5	2,4-Dinitrophenol		0.34 U	0.35 U	0.35 U	0.35 U	0.35 U	0.35 U
121-14-2	2,4-Dinitrotoluene		0.17 U	0.18 U	0.18 U	0.18 U	0.18 U	0.17 U
606-20-2	2,6-Dinitrotoluene		0.17 U	0.18 U	0.18 U	0.18 U	0.18 U	0.17 U
91-58-7	2-Chloronaphthalene		0.17 U	0.18 U	0.18 U	0.18 U	0.18 U	0.17 U
95-57-8	2-Chlorophenol		0.17 U	0.18 U	0.18 U	0.18 U	0.18 U	0.17 U
91-57-6	2-Methylnaphthalene		0.17 U	0.18 U	0.18 U	0.18 U	0.18 U	0.17 U
95-48-7	2-Methylphenol		0.17 U	0.18 U	0.18 U	0.18 U	0.18 U	0.17 U
88-74-4	2-Nitroaniline		0.17 U	0.18 U	0.18 U	0.18 U	0.18 U	0.17 U
88-75-5	2-Nitrophenol		0.17 U	0.18 U	0.18 U	0.18 U	0.18 U	0.17 U
106-44-5	3&4-Methylphenol		0.17 U	0.18 U	0.18 U	0.18 U	0.18 U	0.17 U
91-94-1	3,3'-Dichlorobenzidine		0.17 U	0.18 U	0.18 U	0.18 U	0.18 U	0.17 U
99-09-2	3-Nitroaniline		0.17 U	0.18 U	0.18 U	0.18 U	0.18 U	0.17 U
121-14-2	4,6-Dinitro-2-methylphenol		0.17 U	0.18 U	0.18 U	0.18 U	0.18 U	0.17 U
101-55-3	4-Bromophenyl-phenylether		0.17 U	0.18 U	0.18 U	0.18 U	0.18 U	0.17 U
59-50-7	4-Chloro-3-methylphenol		0.17 U	0.18 U	0.18 U	0.18 U	0.18 U	0.17 U
106-47-8	4-Chloroaniline		0.17 U	0.18 U	0.18 U	0.18 U	0.18 U	0.17 U
7005-72-3	4-Chlorophenyl-phenylether		0.17 U	0.18 U	0.18 U	0.18 U	0.18 U	0.17 U
100-01-6	4-Nitroaniline		0.17 U	0.18 U	0.18 U	0.18 U	0.18 U	0.17 U
100-02-7	4-Nitrophenol		0.17 U	0.18 U	0.18 U	0.18 U	0.18 U	0.17 U
83-32-9	Acenaphthene		0.17 U	0.18 U	0.18 U	0.18 U	0.18 U	0.17 U
208-96-8	Acenaphthylene		0.17 U	0.18 U	0.18 U	0.18 U	0.18 U	0.17 U
120-12-7	Anthracene		0.17 U	0.18 U	0.18 U	0.18 U	0.18 U	0.17 U
92-87-5	Benzidine		0.34 U	0.35 U	0.35 U	0.35 U	0.35 U	0.35 U
56-55-3	Benzo(a)anthracene		0.039 J	0.12 J	0.18 U	0.18 U	0.044 J	0.17 U
50-32-8	Benzo(a)pyrene		0.045 J	0.14 J	0.18 U	0.18 U	0.042 J	0.17 U
205-99-2	Benzo(b)Fluoranthene		0.063 J	0.21	0.18 U	0.18 U	0.061 J	0.17 U
191-24-2	Benzo(g,h,i)perylene		0.035 J	0.12 J	0.18 U	0.18 U	0.18 U	0.17 U
207-08-9	Benzo(k)Fluoranthene		0.17 U	0.059 J	0.18 U	0.18 U	0.18 U	0.17 U
65-85-0	Benzoic Acid		0.34 U	0.35 U	0.35 U	0.35 U	0.35 U	0.35 U
100-51-6	Benzyl Alcohol		0.17 U	0.18 U	0.18 U	0.18 U	0.18 U	0.17 U
111-91-1	Bis(2-Chloroethoxy)Methane		0.17 U	0.18 U	0.18 U	0.18 U	0.18 U	0.17 U
111-44-4	Bis(2-Chloroethyl)ether		0.17 U	0.18 U	0.18 U	0.18 U	0.18 U	0.17 U
108-60-1	Bis(2-Chloroisopropyl)ether		0.17 U	0.18 U	0.18 U	0.18 U	0.18 U	0.17 U
117-81-7	Bis(2-Ethylhexyl)phthalate		0.037 J	0.18 J	0.18 U	0.083 J	0.18 U	0.17 U
85-68-7	Butylbenzylphthalate		0.17 U	0.039 J	0.18 U	0.18 U	0.18 U	0.17 U
86-74-8	Carbazole		0.17 U	0.18 U	0.18 U	0.18 U	0.18 U	0.17 U
218-01-9	Chrysene		0.046 J	0.11 J	0.18 U	0.18 U	0.041 J	0.17 U
84-74-2	Di-n-butylphthalate		0.17 U	0.18 U	0.044 J	0.18 U	0.18 U	0.04 JB
117-84-0	Di-n-octylphthalate		0.17 U	0.18 U	0.18 U	0.18 U	0.18 U	0.17 U
53-70-3	Dibenzo(a,h)anthracene		0.17 U	0.18 U	0.18 U	0.18 U	0.18 U	0.17 U
132-64-9	Dibenzofuran		0.17 U	0.18 U	0.18 U	0.18 U	0.18 U	0.17 U
84-66-2	Diethylphthalate		0.17 U	0.18 U	0.18 U	0.18 U	0.18 U	0.17 U
131-11-3	Dimethylphthalate		0.17 U	0.18 U	0.18 U	0.18 U	0.18 U	0.17 U
206-44-0	Fluoranthene		0.062 J	0.17 J	0.18 U	0.037 J	0.058 J	0.17 U
86-73-7	Fluorene		0.17 U	0.18 U	0.18 U	0.18 U	0.18 U	0.17 U
118-74-1	Hexachlorobenzene		0.17 U	0.18 U	0.18 U	0.18 U	0.18 U	0.17 U
87-68-3	Hexachlorobutadiene		0.17 U	0.18 U	0.18 U	0.18 U	0.18 U	0.17 U
77-47-4	Hexachlorocyclopentadiene		0.52 U	0.53 U	0.53 U	0.53 U	0.53 U	0.52 U
67-72-1	Hexachloroethane		0.17 U	0.18 U	0.18 U	0.18 U	0.18 U	0.17 U
193-39-5	Indeno(1,2,3-cd)pyrene		0.036 J	0.1 J	0.18 U	0.18 U	0.18 U	0.17 U
78-59-1	Isophorone		0.17 U	0.18 U	0.18 U	0.18 U	0.18 U	0.17 U
621-64-7	N-Nitroso-Di-N-Propylamine		0.17 U	0.18 U	0.18 U	0.18 U	0.18 U	0.17 U
62-75-9	N-Nitrosodimethylamine		0.17 U	0.18 U	0.18 U	0.18 U	0.18 U	0.17 U
86-30-6	N-Nitrosodiphenylamine		0.17 U	0.18 U	0.18 U	0.18 U	0.18 U	0.17 U
91-20-3	Naphthalene		0.17 U	0.18 U	0.18 U	0.18 U	0.18 U	0.17 U
98-95-3	Nitrobenzene		0.17 U	0.18 U	0.18 U	0.18 U	0.18 U	0.17 U
87-86-5	Pentachlorophenol		0.17 U	0.18 U	0.18 U	0.18 U	0.18 U	0.17 U
85-01-8	Phenanthrene		0.17 U	0.078 J	0.18 U	0.18 U	0.18 U	0.17 U
108-95-2	Phenol		0.17 U	0.18 U	0.18 U	0.18 U	0.18 U	0.17 U
129-00-0	Pyrene		0.057 J	0.17 J	0.18 U	0.18 U	0.053 J	0.17 U
110-86-1	Pyridine		0.52 U	0.53 U	0.53 U	0.53 U	0.53 U	0.52 U

MG/KG Milligrams per Kilogram
U Not detected at the Method Detection Limit (MDL)/Practical Quantitation Level (PQL), value is adjacent to U
J Analyte detected below MDL/PQL and is estimated

Table 4 C
Surface Soil Analytical Data Results
Building 204
JFK International Airport, New York

	Client Sample ID:	BH-204-1/MW-1 S-1	BH-204-4/MW-3 S-1	BH-204-4/MW-3 S-1 D	BH-204-9/MW-4 S-1	BH-204-10/MW-5 S-1
	Veritech Sample ID:	AA99700	AA99704	AA99705	AA99707	AA99709
	Sampling Date:	12/16/99	12/17/99	12/17/99	12/17/99	12/17/99
CAS #	Analyte Units:	MG/KG	MG/KG	MG/KG	MG/KG	MG/KG
12674-11-2	Aroclor-1016	0.018 U	0.018 U	0.018 U	0.018 U	0.017 U
11104-28-2	Aroclor-1221	0.018 U	0.018 U	0.018 U	0.018 U	0.017 U
11141-16-5	Aroclor-1232	0.018 U	0.018 U	0.018 U	0.018 U	0.017 U
53469-21-9	Aroclor-1242	0.018 U	0.018 U	0.018 U	0.018 U	0.017 U
12672-29-6	Aroclor-1248	0.018 U	0.018 U	0.018 U	0.018 U	0.017 U
11097-69-1	Aroclor-1254	0.018 U	0.018 U	0.018 U	0.018 U	0.017 U
11096-82-5	Aroclor-1260	0.018 U	0.018 U	0.018 U	0.018 U	0.017 U
309-00-2	Aldrin	0.0035 U	0.0035 U	0.0035 U	0.0036 U	0.0035 U
319-84-6	Alpha-BHC	0.0035 U	0.0035 U	0.0035 U	0.0036 U	0.0035 U
319-85-7	Beta-BHC	0.0035 U	0.0035 U	0.0035 U	0.0036 U	0.0035 U
57-74-9	Chlordane	0.0071 U	0.0071 U	0.007 U	0.0072 U	0.0069 U
319-86-8	Delta-BHC	0.0035 U	0.0035 U	0.0035 U	0.0036 U	0.0035 U
60-57-1	Dieldrin	0.0035 U	0.0035 U	0.0035 U	0.0036 U	0.0035 U
959-98-8	Endosulfan I	0.0035 U	0.0035 U	0.0035 U	0.0036 U	0.0035 U
33213-65-9	Endosulfan II	0.0035 U	0.0035 U	0.0035 U	0.0036 U	0.0035 U
1031-07-8	Endosulfan Sulfate	0.0035 U	0.0035 U	0.0035 U	0.0036 U	0.0035 U
72-20-8	Endrin	0.0035 U	0.0035 U	0.0035 U	0.0036 U	0.0035 U
7421-93-4	Endrin Aldehyde	0.0035 U	0.0035 U	0.0035 U	0.0036 U	0.0035 U
53494-70-5	Endrin Ketone	0.0035 U	0.0035 U	0.0035 U	0.0036 U	0.0035 U
58-89-9	Gamma-BHC	0.0035 U	0.0035 U	0.0035 U	0.0036 U	0.0035 U
76-44-8	Heptachlor	0.0049	0.0035 U	0.0035 U	0.0036 U	0.0035 U
1024-57-3	Heptachlor Epoxide	0.0035 U	0.0035 U	0.0035 U	0.0036 U	0.0035 U
72-43-5	Methoxychlor	0.0035 U	0.0058	0.0035 U	0.0036 U	0.0035 U
72-54-8	P,P'-DDD	0.0035 U	0.0035 U	0.0035 U	0.0036 U	0.0035 U
72-55-9	P,P'-DDE	0.0054	0.0035 U	0.0035 U	0.0036 U	0.0084
50-29-3	P,P'-DDT	0.0035 U	0.0035 U	0.0035 U	0.0036 U	0.0084
8001-35-2	Toxaphene	0.035 U	0.035 U	0.035 U	0.036 U	0.035 U

MG/KG Milligrams per Kilogram
U Not detected at the Method Detection Limit (MDL)/Practical Quantitation Level (PQL), value is shown adjacent to U
J Analyte detected below MDL/PQL and is estimated

Table 4 C
Surface Soil Analytical Data Results
Building 204
JFK International Airport, New York

CAS #	Analyte	Client Sample ID:	BH-204-3/MW-2 S-1	BH-204-2 S-1	BH-204-6 S-1	BH-204-7 S-1	BH-204-5 S-1	BH-204-8 S-1
		Veritech Sample ID:	AA99926	AA99928	AA99930	AA99932	AA99994	AA99996
		Sampling Date:	12/20/99	12/20/99	12/20/99	12/20/99	12/21/99	12/21/99
		Units:	MG/KG	MG/KG	MG/KG	MG/KG	MG/KG	MG/KG
12674-11-2	Aroclor-1016		0.017 U	0.018 U	0.018 U	0.018 U	0.018 U	0.017 U
11104-28-2	Aroclor-1221		0.017 U	0.018 U	0.018 U	0.018 U	0.018 U	0.017 U
11141-16-5	Aroclor-1232		0.017 U	0.018 U	0.018 U	0.018 U	0.018 U	0.017 U
53469-21-9	Aroclor-1242		0.017 U	0.018 U	0.018 U	0.018 U	0.018 U	0.017 U
12672-29-6	Aroclor-1248		0.017 U	0.018 U	0.018 U	0.018 U	0.018 U	0.017 U
11097-69-1	Aroclor-1254		0.017 U	0.018 U	0.018 U	0.018 U	0.018 U	0.017 U
11096-82-5	Aroclor-1260		0.049	0.82	0.018 U	0.018 U	0.018 U	0.017 U
309-00-2	Aldrin		0.017 U	0.35 U	0.0035 U	0.0035 U	0.0035 U	0.0035 U
319-84-6	Alpha-BHC		0.017 U	0.35 U	0.0035 U	0.0035 U	0.0035 U	0.0035 U
319-85-7	Beta-BHC		0.017 U	0.35 U	0.0035 U	0.0035 U	0.0035 U	0.0035 U
57-74-9	Chlordane		0.034 U	0.71 U	0.007 U	0.0071 U	0.007 U	0.0069 U
319-86-8	Delta-BHC		0.017 U	0.35 U	0.0035 U	0.0035 U	0.0035 U	0.0035 U
60-57-1	Dieldrin		0.038	0.35 U	0.0035 U	0.0035 U	0.0035 U	0.0035 U
959-98-8	Endosulfan I		0.017 U	0.35 U	0.0035 U	0.0035 U	0.0035 U	0.0035 U
33213-65-9	Endosulfan II		0.017 U	0.35 U	0.0035 U	0.0035 U	0.0035 U	0.0035 U
1031-07-8	Endosulfan Sulfate		0.017 U	0.35 U	0.0035 U	0.0035 U	0.0035 U	0.0035 U
72-20-8	Endrin		0.017 U	0.35 U	0.0035 U	0.0035 U	0.0035 U	0.0035 U
7421-93-4	Endrin Aldehyde		0.017 U	0.35 U	0.0035 U	0.0035 U	0.0035 U	0.0035 U
53494-70-5	Endrin Ketone		0.017 U	0.35 U	0.0035 U	0.0035 U	0.0035 U	0.0035 U
58-89-9	Gamma-BHC		0.017 U	0.35 U	0.0035 U	0.0035 U	0.0035 U	0.0035 U
76-44-8	Heptachlor		0.017 U	0.35 U	0.0035 U	0.0035 U	0.0035 U	0.0035 U
1024-57-3	Heptachlor Epoxide		0.017 U	0.35 U	0.0035 U	0.0035 U	0.0035 U	0.0035 U
72-43-5	Methoxychlor		0.017 U	0.35 U	0.0035 U	0.0035 U	0.0035 U	0.0035 U
72-54-8	P,P'-DDD		0.069	0.68	0.0035 U	0.0035 U	0.0035 U	0.0035 U
72-55-9	P,P'-DDE		0.19	2.7	0.0035 U	0.0082	0.005	0.0035 U
50-29-3	P,P'-DDT		0.26	1.7	0.0035 U	0.0045	0.016	0.0035 U
8001-35-2	Toxaphene		0.17 U	3.5 U	0.035 U	0.035 U	0.035 U	0.035 U

MG/KG. Milligrams per Kilogram
U. Not detected at the Method Dectation Limit (MDL)/Practical Quantitation Level (PQL), value is shown adjacent to U
J' Analyte detected below MDL/PQL and is estimated

Table 4 D
Surface Soil Analytical Data Results
Building 204
JFK International Airport, New York

CAS #	Analyte	Units	BH-204-1/MW-1 S-1	BH-204-4/MW-3 S-1	BH-204-4/MW-3 S-1 D	BH-204-9/MW-4 S-1
	Client Sample ID:		BH-204-1/MW-1 S-1	BH-204-4/MW-3 S-1	BH-204-4/MW-3 S-1 D	BH-204-9/MW-4 S-1
	Ventech Sample ID:		AA99700	AA99704	AA99705	AA99707
	Sampling Date:		12/16/99	12/17/99	12/17/99	12/17/99
		Units:	MG/KG	MG/KG	MG/KG	MG/KG
7440-36-0	Antimony	ppm	1.4 U	1.4 U	1.4 U	1.7
7440-38-2	Arsenic	ppm	2 U	2.8	2.5	15
7440-39-3	Barium	ppm	20	20	22	51
7440-41-7	Beryllium	ppm	0.19 U	0.19 U	0.19 U	0.19 U
7440-43-9	Cadmium	ppm	0.32 U	0.32 U	0.32 U	0.32 U
7440-47-3	Chromium	ppm	7.9	8.3	10	9.7
7440-50-8	Copper	ppm	7.3	9.8	7.6	31
7439-92-1	Lead	ppm	24	27	14	51
7439-97-6	Mercury	ppm	0.22	0.24	0.35	0.052
7440-02-0	Nickel	ppm	6.4	5.9	7.1	19
7782-49-2	Selenium	ppm	2.9 U	2.9 U	2.8 U	2.9 U
7440-22-4	Silver	ppm	1.3 U	1.3 U	1.3 U	1.3 U
7440-28-0	Thallium	ppm	1.1 U	1.1 U	1.1 U	1.1 U
7440-66-6	Zinc	ppm	25	81	68	70
57-12-5	Cyanide	ppm	0.28 U	0.27 U	0.26 U	0.27 U
108-95-2	Phenol	ppm	1.3 U	1.3 U	1.3 U	1.3 U
	Total Petroleum Hydrocarbons	ppm	130	77	110	77
	% Solids	Percent	94	94	95	93

MG/KG Milligrams per Kilogram
U: Not detected at the corresponding Method Detection Limit (MDL)/Practical Quantitation Level (PQL), value is shown adjacent to U

Table 4 D
Surface Soil Analytical Data Results
Building 204
JFK International Airport, New York

CAS #	Analyte	Units:	BH-204-10/MW-5 S-1	BH-204-3/MW-2 S-1	BH-204-2 S-1	BH-204-6 S-1
		Client Sample ID:	BH-204-10/MW-5 S-1	BH-204-3/MW-2 S-1	BH-204-2 S-1	BH-204-6 S-1
		Veritech Sample ID	AA99709	AA99926	AA99928	AA99930
		Sampling Date:	12/17/99	12/20/99	12/20/99	12/20/99
		Units:	MG/KG	MG/KG	MG/KG	MG/KG
7440-36-0	Antimony	ppm	1.4 U	1.3 U	1.4 U	1.4 U
7440-38-2	Arsenic	ppm	2 U	2 U	3	2 U
7440-39-3	Barium	ppm	26	13	40	24
7440-41-7	Beryllium	ppm	0.19 U	0.19 U	0.19 U	0.19 U
7440-43-9	Cadmium	ppm	0.31 U	0.32 U	0.32 U	0.32 U
7440-47-3	Chromium	ppm	7.2	5	13	4.4
7440-50-8	Copper	ppm	9.4	8.5	16	4.8
7439-92-1	Lead	ppm	9.2	16	73	4
7439-97-6	Mercury	ppm	0.039	0.033 U	0.052	0.034 U
7440-02-0	Nickel	ppm	10	4	10	9.5
7782-49-2	Selenium	ppm	2.8 U	2.8 U	2.9 U	2.8 U
7440-22-4	Silver	ppm	1.2 U	1.2 U	1.3 U	1.3 U
7440-28-0	Thallium	ppm	1 U	1 U	1.1 U	1.1 U
7440-66-6	Zinc	ppm	27	19	68	19 U
57-12-5	Cyanide	ppm	0.26 U	0.26 U	0.27 U	0.26 U
108-95-2	Phenol	ppm	1.3 U	1.3 U	1.3 U	1.3 U
	Total Petroleum Hydrocarbons	ppm	88	63	110	42
	% Solids	Percent	96	97	94	95

MG/KG Milligrams per Kilogram
U: Not detected at the corresponding Method Detection Limit (MDL)/Practical Quantitation Level (PQL), value is shown adjacent to U

Table 4 D
Surface Soil Analytical Data Results
Building 204
JFK International Airport, New York

CAS #	Analyte	Units:	BH-204-7 S-1	BH-204-5 S-1	BH-204-8 S-1
		Client Sample ID:	BH-204-7 S-1	BH-204-5 S-1	BH-204-8 S-1
		Veritech Sample ID:	AA99932	AA99994	AA99996
		Sampling Date:	12/20/99	12/21/99	12/21/99
		Units:	MG/KG	MG/KG	MG/KG
7440-36-0	Antimony	ppm	1 4 U	1.4 U	1.4 U
7440-38-2	Arsenic	ppm	2 8	2 1	2 U
7440-39-3	Barium	ppm	26	19	23
7440-41-7	Beryllium	ppm	0.19 U	0.19 U	0.19 U
7440-43-9	Cadmium	ppm	0 32 U	0.32 U	0 31 U
7440-47-3	Chromium	ppm	9 7	8 7	7.9
7440-50-8	Copper	ppm	9 8	9 1	8 2
7439-92-1	Lead	ppm	24	16	14
7439-97-6	Mercury	ppm	0 24	0 068	0 067
7440-02-0	Nickel	ppm	7 7	8 1	7 9
7782-49-2	Selenium	ppm	2 9 U	2 8 U	2 8 U
7440-22-4	Silver	ppm	1.3 U	1 3 U	1 2 U
7440-28-0	Thallium	ppm	1.1 U	1 1 U	1 U
7440-66-6	Zinc	ppm	27	52	62
57-12-5	Cyanide	ppm	0 27 U	0 26 U	0 26 U
103-95-2	Phenol	ppm	1 3 U	1.3 U	1.3 U
	Total Petroleum Hydrocarbons	ppm	180	36 U	74
	% Solids	Percent	94	95	96

MG/KG Milligrams per Kilogram
U Not detected at the corresponding Method Detection Limit (MDL)/Practical Quantitation Level (PQL) value is shown adjacent to U

Table 5 A
Subsurface Soil Analytical Data Results
Building 204
JFK International Airport, New York

CAS #	Analyte	Units:	Client Sample ID: BH-204-1/MW-1 S-5	BH-204-4/MW-3 S-5	BH-204-9/MW-4 S-5	BH-204-10/MW-5 S-5	BH-204-3/MW-2 S-5
		Veritech Sample ID:	AA99701	AA99706	AA99708	AA99710	AA99927
		Sampling Date:	12/16/99	12/17/99	12/17/99	12/17/99	12/20/99
			MG/KG	MG/KG	MG/KG	MG/KG	MG/KG
630-20-6	1,1,1,2-Tetrachloroethane		0.0011 U	0.0012 U	0.0011 U	0.0011 U	0.0011 U
71-55-6	1,1,1-Trichloroethane		0.0056 U	0.0062 U	0.0053 U	0.0055 U	0.0057 U
79-34-5	1,1,2,2-Tetrachloroethane		0.0056 U	0.0062 U	0.0053 U	0.0055 U	0.0057 U
79-00-5	1,1,2-Trichloroethane		0.0056 U	0.0062 U	0.0053 U	0.0055 U	0.0057 U
75-34-3	1,1-Dichloroethane		0.0056 U	0.0062 U	0.0053 U	0.0055 U	0.0057 U
75-35-4	1,1-Dichloroethene		0.0056 U	0.0062 U	0.0053 U	0.0055 U	0.0057 U
95-50-1	1,2-Dichlorobenzene		0.0056 U	0.0062 U	0.0053 U	0.0055 U	0.0057 U
107-06-2	1,2-Dichloroethane		0.0056 U	0.0062 U	0.0053 U	0.0055 U	0.0057 U
78-87-5	1,2-Dichloropropane		0.0056 U	0.0062 U	0.0053 U	0.0055 U	0.0057 U
541-73-1	1,3-Dichlorobenzene		0.0056 U	0.0062 U	0.0053 U	0.0055 U	0.0057 U
106-46-7	1,4-Dichlorobenzene		0.0056 U	0.0062 U	0.0053 U	0.0055 U	0.0057 U
78-93-3	2-Butanone		0.028 U	0.031 U	0.027 U	0.027 U	0.029 U
110-75-8	2-Chloroethylvinylether		0.0056 U	0.0062 U	0.0053 U	0.0055 U	0.0057 U
591-78-6	2-Hexanone		0.022 U	0.025 U	0.021 U	0.022 U	0.023 U
108-10-1	4-Methyl-2-Pentanone		0.022 U	0.025 U	0.021 U	0.022 U	0.023 U
67-64-1	Acetone		0.022 U	0.025 U	0.021 U	0.022 U	0.023 U
107-02-8	Acrolein		0.017 U	0.019 U	0.016 U	0.016 U	0.017 U
107-13-1	Acrylonitrile		0.0078 U	0.0087 U	0.0074 U	0.0076 U	0.008 U
71-43-2	Benzene		0.0011 U	0.0012 U	0.0011 U	0.0011 U	0.0011 U
75-27-4	Bromodichloromethane		0.0056 U	0.0062 U	0.0053 U	0.0055 U	0.0057 U
75-25-2	Bromoform		0.0056 U	0.0062 U	0.0053 U	0.0055 U	0.0057 U
74-83-9	Bromomethane		0.0056 U	0.0062 U	0.0053 U	0.0055 U	0.0057 U
75-15-0	Carbon Disulfide		0.0056 U	0.0062 U	0.0053 U	0.0055 U	0.0057 U
56-23-5	Carbon Tetrachloride		0.0056 U	0.0062 U	0.0053 U	0.0055 U	0.0057 U
108-90-7	Chlorobenzene		0.0056 U	0.0062 U	0.0053 U	0.0055 U	0.0057 U
75-00-3	Chloroethane		0.0056 U	0.0062 U	0.0053 U	0.0055 U	0.0057 U
67-66-3	Chloroform		0.0056 U	0.0062 U	0.0053 U	0.0055 U	0.0057 U
74-87-3	Chloromethane		0.0056 U	0.0062 U	0.0053 U	0.0055 U	0.0057 U
156-59-2	cis-1,2-Dichloroethene		0.0056 U	0.0062 U	0.0053 U	0.0055 U	0.0057 U
10061-01-5	cis-1,3-Dichloropropene		0.0056 U	0.0062 U	0.0053 U	0.0055 U	0.0057 U
108-20-3	di-Isopropyl-ether		0.0056 U	0.0062 U	0.0053 U	0.0055 U	0.0057 U
124-48-1	Dibromochloromethane		0.0056 U	0.0062 U	0.0053 U	0.0055 U	0.0057 U
100-41-4	Ethylbenzene		0.0011 U	0.0012 U	0.0011 U	0.0011 U	0.0011 U
108-38-3	M&P-Xylenes		0.0022 U	0.0025 U	0.0021 U	0.0022 U	0.0023 U
1634-04-4	Methyl-t-butyl ether		0.0011 U	0.0012 U	0.0011 U	0.0011 U	0.0011 U
75-09-2	Methylene Chloride		0.0081	0.0081	0.0033 J	0.0049 J	0.0081
95-47-6	O-Xylene		0.0011 U	0.0012 U	0.0011 U	0.0011 U	0.0011 U
100-42-5	Styrene		0.0011 U	0.0012 U	0.0011 U	0.0011 U	0.0011 U
75-65-0	t-Butyl Alcohol		0.011 U	0.013 U	0.011 U	0.011 U	0.011 U
127-18-4	Tetrachloroethene		0.0056 U	0.0062 U	0.0053 U	0.0055 U	0.0057 U
108-88-3	Toluene		0.0011 U	0.0012 U	0.0011 U	0.0011 U	0.0011 U
156-60-5	trans-1,2-Dichloroethene		0.0056 U	0.0062 U	0.0053 U	0.0055 U	0.0057 U
10061-02-6	trans-1,3-Dichloropropene		0.0056 U	0.0062 U	0.0053 U	0.0055 U	0.0057 U
79-01-6	Trichloroethene		0.0056 U	0.0062 U	0.0053 U	0.0055 U	0.0057 U
75-69-4	Trichlorofluoromethane		0.0056 U	0.0062 U	0.0053 U	0.0055 U	0.0057 U
108-05-4	Vinyl Acetate		0.011 U	0.013 U	0.011 U	0.011 U	0.011 U
75-01-4	Vinyl Chloride		0.0056 U	0.0062 U	0.0053 U	0.0055 U	0.0057 U

MG/KG Milligrams per Kilogram
UG/L Micrograms per Liter
U. Not detected at the Method Detection Limit (MDL)/Practical Quantitation Level (PQL), value is shown adjacent to U
J: Analyte detected below MDL/PQL and is estimated

Table 5 A
Subsurface Soil Analytical Data Results
Building 204
JFK International Airport, New York

	Client Sample ID:	BH-204-2 S-5	BH-204-6 S-5	BH-204-7 S-5	BH-204-8 S-5	BH-204-8 S-5	FB 12/16
	Veritech Sample ID:	AA99929	AA99931	AA99933	AA99996	AA99997	AA99702
	Sampling Date:	12/20/99	12/20/99	12/20/99	12/21/99	12/21/99	12/16/99
CAS #	Analyte Units:	MG/KG	MG/KG	MG/KG	MG/KG	MG/KG	UG/L
630-20-6	1,1,1,2-Tetrachloroethane	0.0011 U	0.0012 U	0.0012 U	0.0012 U	0.0011 U	1 U
71-55-6	1,1,1-Trichloroethane	0.0054 U	0.0059 U	0.0059 U	0.0059 U	0.0056 U	5 U
79-34-5	1,1,2,2-Tetrachloroethane	0.0054 U	0.0059 U	0.0059 U	0.0059 U	0.0056 U	5 U
79-00-5	1,1,2-Trichloroethane	0.0054 U	0.0059 U	0.0059 U	0.0059 U	0.0056 U	5 U
75-34-3	1,1-Dichloroethane	0.0054 U	0.0059 U	0.0059 U	0.0059 U	0.0056 U	5 U
75-35-4	1,1-Dichloroethene	0.0054 U	0.0059 U	0.0059 U	0.0059 U	0.0056 U	5 U
95-50-1	1,2-Dichlorobenzene	0.0054 U	0.0059 U	0.0059 U	0.0059 U	0.0056 U	5 U
107-06-2	1,2-Dichloroethane	0.0054 U	0.0059 U	0.0059 U	0.0059 U	0.0056 U	5 U
78-87-5	1,2-Dichloropropane	0.0054 U	0.0059 U	0.0059 U	0.0059 U	0.0056 U	5 U
541-73-1	1,3-Dichlorobenzene	0.0054 U	0.0059 U	0.0059 U	0.0059 U	0.0056 U	5 U
106-46-7	1,4-Dichlorobenzene	0.0054 U	0.0059 U	0.0059 U	0.0059 U	0.0056 U	5 U
78-93-3	2-Butanone	0.027 U	0.029 U	0.029 U	0.029 U	0.028 U	25 U
110-75-8	2-Chloroethylvinylether	0.0054 U	0.0059 U	0.0059 U	0.0059 U	0.0056 U	5 U
591-78-6	2-Hexanone	0.022 U	0.024 U	0.024 U	0.024 U	0.022 U	20 U
108-10-1	4-Methyl-2-Pentanone	0.022 U	0.024 U	0.024 U	0.024 U	0.022 U	20 U
67-64-1	Acetone	0.022 U	0.024 U	0.024 U	0.024 U	0.022 U	20 U
107-02-8	Acrolein	0.016 U	0.018 U	0.018 U	0.018 U	0.017 U	15 U
107-13-1	Acrylonitrile	0.0075 U	0.0082 U	0.0082 U	0.0082 U	0.0077 U	15 U
71-43-2	Benzene	0.0011 U	0.0012 U	0.0012 U	0.0012 U	0.0011 U	1 U
75-27-4	Bromodichloromethane	0.0054 U	0.0059 U	0.0059 U	0.0059 U	0.0056 U	5 U
75-25-2	Bromoform	0.0054 U	0.0059 U	0.0059 U	0.0059 U	0.0056 U	5 U
74-83-9	Bromomethane	0.0054 U	0.0059 U	0.0059 U	0.0059 U	0.0056 U	5 U
75-15-0	Carbon Disulfide	0.0054 U	0.0059 U	0.0059 U	0.0059 U	0.0056 U	5 U
56-23-5	Carbon Tetrachloride	0.0054 U	0.0059 U	0.0059 U	0.0059 U	0.0056 U	5 U
108-90-7	Chlorobenzene	0.0054 U	0.0059 U	0.0059 U	0.0059 U	0.0056 U	5 U
75-00-3	Chloroethane	0.0054 U	0.0059 U	0.0059 U	0.0059 U	0.0056 U	5 U
67-66-3	Chloroform	0.0054 U	0.0059 U	0.0059 U	0.0059 U	0.0056 U	5 U
74-87-3	Chloromethane	0.0054 U	0.0059 U	0.0059 U	0.0059 U	0.0056 U	5 U
156-59-2	cis-1,2-Dichloroethene	0.0054 U	0.0059 U	0.0059 U	0.0059 U	0.0056 U	5 U
10061-01-5	cis-1,3-Dichloropropene	0.0054 U	0.0059 U	0.0059 U	0.0059 U	0.0056 U	5 U
108-20-3	di-Isopropyl-ether	0.0054 U	0.0059 U	0.0059 U	0.0059 U	0.0056 U	5 U
124-48-1	Dibromochloromethane	0.0054 U	0.0059 U	0.0059 U	0.0059 U	0.0056 U	5 U
100-41-4	Ethylbenzene	0.0011 U	0.0012 U	0.0012 U	0.0012 U	0.0011 U	1 U
108-38-3	M&P-Xylenes	0.0022 U	0.0024 U	0.0024 U	0.0024 U	0.0022 U	2 U
1634-04-4	Methyl-t-butyl ether	0.0011 U	0.0012 U	0.22	0.0012 U	0.0011 U	1 U
75-09-2	Methylene Chloride	0.0059	0.0073	0.0071	0.008 B	0.0033 JB	5 U
95-47-6	O-Xylene	0.0011 U	0.0012 U	0.0012 U	0.0012 U	0.0011 U	1 U
100-42-5	Styrene	0.0011 U	0.0012 U	0.0012 U	0.0012 U	0.0011 U	1 U
75-65-0	t-Butyl Alcohol	0.011 U	0.012 U	0.012 U	0.012 U	0.011 U	10 U
127-18-4	Tetrachloroethene	0.0054 U	0.0059 U	0.0059 U	0.0059 U	0.0056 U	5 U
108-88-3	Toluene	0.0011 U	0.0012 U	0.0012 U	0.0012 U	0.0011 U	1 U
156-60-5	trans-1,2-Dichloroethene	0.0054 U	0.0059 U	0.0059 U	0.0059 U	0.0056 U	5 U
10061-02-6	trans-1,3-Dichloropropene	0.0054 U	0.0059 U	0.0059 U	0.0059 U	0.0056 U	5 U
79-01-6	Trichloroethene	0.0054 U	0.0059 U	0.0059 U	0.0059 U	0.0056 U	5 U
75-69-4	Trichlorofluoromethane	0.0054 U	0.0059 U	0.0059 U	0.0059 U	0.0056 U	5 U
108-05-4	Vinyl Acetate	0.011 U	0.012 U	0.012 U	0.012 U	0.011 U	10 U
75-01-4	Vinyl Chloride	0.0054 U	0.0059 U	0.0059 U	0.0059 U	0.0056 U	5 U

MG/KG: Milligrams per Kilogram
UG/L Micrograms per Liter
U Not detected at the Method Detection Limit (MDL)/Practical Quantitation Level (PQL), value is shown adjacent to U
J Analyte detected below MDL/PQL and is estimated

Table 6 A
Subsurface Soil Analytical Data Results
Building 204
JFK International Airport, New York

	Client Sample ID:	FB 12/17	FB 12/20	FB 12/21
	Veritech Sample ID:	AA99703	AA99934	AA99998
	Sampling Date:	12/17/99	12/20/99	12/21/99
CAS #	Analyte Units:	UG/L	UG/L	UG/L
630-20-6	1,1,1,2-Tetrachloroethane	1 U	1 U	1 U
71-55-6	1,1,1-Trichloroethane	5 U	5 U	5 U
79-34-5	1,1,2,2-Tetrachloroethane	5 U	5 U	5 U
79-00-5	1,1,2-Trichloroethane	5 U	5 U	5 U
75-34-3	1,1-Dichloroethane	5 U	5 U	5 U
75-35-4	1,1-Dichloroethene	5 U	5 U	5 U
95-50-1	1,2-Dichlorobenzene	5 U	5 U	5 U
107-06-2	1,2-Dichloroethane	5 U	5 U	5 U
78-87-5	1,2-Dichloropropane	5 U	5 U	5 U
541-73-1	1,3-Dichlorobenzene	5 U	5 U	5 U
106-46-7	1,4-Dichlorobenzene	5 U	5 U	5 U
78-93-3	2-Butanone	25 U	25 U	25 U
110-75-8	2-Chloroethylvinylether	5 U	5 U	5 U
591-78-6	2-Hexanone	20 U	20 U	20 U
108-10-1	4-Methyl-2-Pentanone	20 U	20 U	20 U
67-64-1	Acetone	20 U	20 U	20 U
107-02-8	Acrolein	15 U	15 U	15 U
107-13-1	Acrylonitrile	15 U	15 U	15 U
71-43-2	Benzene	1 U	1 U	1 U
75-27-4	Bromodichloromethane	5 U	5 U	5 U
75-25-2	Bromoform	5 U	5 U	5 U
74-83-9	Bromomethane	5 U	5 U	5 U
75-15-0	Carbon Disulfide	5 U	5 U	5 U
56-23-5	Carbon Tetrachloride	5 U	5 U	5 U
108-90-7	Chlorobenzene	5 U	5 U	5 U
75-00-3	Chloroethane	5 U	5 U	5 U
67-66-3	Chloroform	5 U	5 U	5 U
74-87-3	Chloromethane	5 U	5 U	5 U
156-59-2	cis-1,2-Dichloroethene	5 U	5 U	5 U
10061-01-5	cis-1,3-Dichloropropene	5 U	5 U	5 U
108-20-3	di-Isopropyl-ether	5 U	5 U	5 U
124-48-1	Dibromochloromethane	5 U	5 U	5 U
100-41-4	Ethylbenzene	1 U	1 U	1 U
108-38-3	M&P-Xylenes	2 U	2 U	2 U
1634-04-4	Methyl-t-butyl ether	1 U	1 U	1 U
75-09-2	Methylene Chloride	5 U	3.6 J	1.3 J
95-47-6	O-Xylene	1 U	1 U	1 U
100-42-5	Styrene	1 U	1 U	1 U
75-65-0	t-Butyl Alcohol	10 U	10 U	10 U
127-18-4	Tetrachloroethene	5 U	5 U	5 U
108-88-3	Toluene	1 U	1 U	1 U
156-60-5	trans-1,2-Dichloroethene	5 U	5 U	5 U
10061-02-6	trans-1,3-Dichloropropene	5 U	5 U	5 U
79-01-6	Trichloroethene	5 U	5 U	5 U
75-69-4	Trichlorofluoromethane	5 U	5 U	5 U
108-05-4	Vinyl Acetate	10 U	10 U	10 U
75-01-4	Vinyl Chloride	5 U	5 U	5 U

MG/KG Milligrams per Kilogram
UG/L Micrograms per Liter
U Not detected at the Method Detection Limit (MDL)/Practical Quantitation Level (PQL) value is shown adjacent to U
J Analyte detected below MDL/PQL and is estimated

Table 5 B
Subsurface Soil Analytical Data Results
Building 204
JFK International Airport, New York

CAS #	Analyte	Client Sample ID:	BH-204-1/MW-1 S-5	BH-204-4/MW-3 S-5	BH-204-9/MW-4 S-5	BH-204-10/MW-5 S-5	BH-204-3/MW-2 S-5
		Veritech Sample ID:	AA99701	AA99706	AA99708	AA99710	AA99927
		Sampling Date:	12/16/99	12/17/99	12/17/99	12/17/99	12/20/99
		Units:	MG/KG	MG/KG	MG/KG	MG/KG	MG/KG
120-82-1	1,2,4-Trichlorobenzene		0.19 U	0.21 U	0.18 U	0.18 U	0.19 U
95-50-1	1,2-Dichlorobenzene		0.19 U	0.21 U	0.18 U	0.18 U	0.19 U
122-66-7	1,2-Diphenylhydrazine		0.037 U	0.042 U	0.035 U	0.037 U	0.038 U
541-73-1	1,3-Dichlorobenzene		0.19 U	0.21 U	0.18 U	0.18 U	0.19 U
106-46-7	1,4-Dichlorobenzene		0.19 U	0.21 U	0.18 U	0.18 U	0.19 U
95-95-4	2,4,5-Trichlorophenol		0.19 U	0.21 U	0.18 U	0.18 U	0.19 U
88-06-2	2,4,6-Trichlorophenol		0.19 U	0.21 U	0.18 U	0.18 U	0.19 U
120-83-2	2,4-Dichlorophenol		0.19 U	0.21 U	0.18 U	0.18 U	0.19 U
105-67-9	2,4-Dimethylphenol		0.19 U	0.21 U	0.18 U	0.18 U	0.19 U
51-28-5	2,4-Dinitrophenol		0.37 U	0.42 U	0.35 U	0.37 U	0.38 U
121-14-2	2,4-Dinitrotoluene		0.19 U	0.21 U	0.18 U	0.18 U	0.19 U
606-20-2	2,6-Dinitrotoluene		0.19 U	0.21 U	0.18 U	0.18 U	0.19 U
91-58-7	2-Chloronaphthalene		0.19 U	0.21 U	0.18 U	0.18 U	0.19 U
95-57-8	2-Chlorophenol		0.19 U	0.21 U	0.18 U	0.18 U	0.19 U
91-57-6	2-Methylnaphthalene		0.19 U	0.21 U	0.18 U	0.18 U	0.19 U
95-48-7	2-Methylphenol		0.19 U	0.21 U	0.18 U	0.18 U	0.19 U
88-74-4	2-Nitroaniline		0.19 U	0.21 U	0.18 U	0.18 U	0.19 U
88-75-5	2-Nitrophenol		0.19 U	0.21 U	0.18 U	0.18 U	0.19 U
106-44-5	3&4-Methylphenol		0.19 U	0.21 U	0.18 U	0.18 U	0.19 U
91-94-1	3,3'-Dichlorobenzidine		0.19 U	0.21 U	0.18 U	0.18 U	0.19 U
99-09-2	3-Nitroaniline		0.19 U	0.21 U	0.18 U	0.18 U	0.19 U
121-14-2	4,6-Dinitro-2-methylphenol		0.19 U	0.21 U	0.042 J	0.18 U	0.19 U
101-55-3	4-Bromophenyl-phenylether		0.19 U	0.21 U	0.18 U	0.18 U	0.19 U
59-50-7	4-Chloro-3-methylphenol		0.19 U	0.21 U	0.18 U	0.18 U	0.19 U
106-47-8	4-Chloroaniline		0.19 U	0.21 U	0.18 U	0.18 U	0.19 U
7005-72-3	4-Chlorophenyl-phenylether		0.19 U	0.21 U	0.18 U	0.18 U	0.19 U
100-01-6	4-Nitroaniline		0.19 U	0.21 U	0.18 U	0.18 U	0.19 U
100-02-7	4-Nitrophenol		0.19 U	0.21 U	0.18 U	0.18 U	0.19 U
83-32-9	Acenaphthene		0.19 U	0.21 U	0.18 U	0.18 U	0.19 U
208-96-8	Acenaphthylene		0.19 U	0.21 U	0.18 U	0.18 U	0.19 U
120-12-7	Anthracene		0.19 U	0.21 U	0.18 U	0.18 U	0.19 U
92-87-5	Benzidine		0.37 U	0.42 U	0.35 U	0.37 U	0.38 U
56-55-3	Benzo[a]anthracene		0.19 U	0.21 U	0.18 U	0.18 U	0.19 U
50-32-8	Benzo[a]pyrene		0.19 U	0.21 U	0.18 U	0.18 U	0.19 U
205-99-2	Benzo[b]Fluoranthene		0.19 U	0.21 U	0.18 U	0.18 U	0.19 U
191-24-2	Benzo[g,h,i]perylene		0.19 U	0.21 U	0.18 U	0.18 U	0.19 U
207-08-9	Benzo[k]Fluoranthene		0.19 U	0.21 U	0.18 U	0.18 U	0.19 U
65-85-0	Benzoic Acid		0.37 U	0.42 U	0.35 U	0.37 U	0.38 U
100-51-6	Benzyl Alcohol		0.19 U	0.21 U	0.18 U	0.18 U	0.19 U
111-91-1	Bis(2-Chloroethoxy)Methane		0.19 U	0.21 U	0.18 U	0.18 U	0.19 U
111-44-4	Bis(2-Chloroethyl)ether		0.19 U	0.21 U	0.18 U	0.18 U	0.19 U
108-60-1	Bis(2-Chloroisopropyl)ether		0.19 U	0.21 U	0.18 U	0.18 U	0.19 U
117-81-7	Bis(2-Ethylhexyl)phthalate		0.19 U	0.21 U	0.18 U	0.18 U	0.19 U
85-68-7	Butylbenzylphthalate		0.19 U	0.21 U	0.18 U	0.18 U	0.19 U
86-74-8	Carbazole		0.19 U	0.21 U	0.18 U	0.18 U	0.19 U
218-01-9	Chrysene		0.19 U	0.21 U	0.18 U	0.18 U	0.19 U
84-74-2	Di-n-butylphthalate		0.19 U	0.21 U	0.18 U	0.18 U	0.19 U
117-84-0	Di-n-octylphthalate		0.19 U	0.21 U	0.18 U	0.18 U	0.19 U
53-70-3	Dibenzo[a,h]anthracene		0.19 U	0.21 U	0.18 U	0.18 U	0.19 U
132-64-9	Dibenzofuran		0.19 U	0.21 U	0.18 U	0.18 U	0.19 U
84-66-2	Diethylphthalate		0.19 U	0.21 U	0.18 U	0.18 U	0.19 U
131-11-3	Dimethylphthalate		0.19 U	0.21 U	0.18 U	0.18 U	0.19 U
206-44-0	Fluoranthene		0.19 U	0.21 U	0.18 U	0.18 U	0.19 U
86-73-7	Fluorene		0.19 U	0.21 U	0.18 U	0.18 U	0.19 U
118-74-1	Hexachlorobenzene		0.19 U	0.21 U	0.18 U	0.18 U	0.19 U
87-68-3	Hexachlorobutadiene		0.19 U	0.21 U	0.18 U	0.18 U	0.19 U
77-47-4	Hexachlorocyclopentadiene		0.56 U	0.62 U	0.53 U	0.55 U	0.57 U
67-72-1	Hexachloroethane		0.19 U	0.21 U	0.18 U	0.18 U	0.19 U
193-39-5	Indeno[1,2,3-cd]pyrene		0.19 U	0.21 U	0.18 U	0.18 U	0.19 U
78-59-1	Isophorone		0.19 U	0.21 U	0.18 U	0.18 U	0.19 U
621-64-7	N-Nitroso-Di-N-Propylamine		0.19 U	0.21 U	0.18 U	0.18 U	0.19 U
62-75-9	N-Nitrosodimethylamine		0.19 U	0.21 U	0.18 U	0.18 U	0.19 U
86-30-6	N-Nitrosodiphenylamine		0.19 U	0.21 U	0.18 U	0.18 U	0.19 U
91-20-3	Naphthalene		0.19 U	0.21 U	0.18 U	0.18 U	0.19 U
98-95-3	Nitrobenzene		0.19 U	0.21 U	0.18 U	0.18 U	0.19 U
87-86-5	Pentachlorophenol		0.19 U	0.21 U	0.18 U	0.18 U	0.19 U
85-01-8	Phenanthrene		0.19 U	0.21 U	0.18 U	0.18 U	0.19 U
108-95-2	Phenol		0.19 U	0.21 U	0.18 U	0.18 U	0.19 U
129-00-0	Pyrene		0.19 U	0.21 U	0.18 U	0.18 U	0.19 U
110-86-1	Pyridine		0.56 U	0.62 U	0.53 U	0.55 U	0.57 U

MG/KG Milligrams per kilogram
U Not detected at the Method Detection Limit (MDL)/Practical Quantitation Level (PQL), value is shown adjacent to U
J Analyte detected below MDL/PQL and is estimated

Table 5 B
Subsurface Soil Analytical Data Results
Building 204
JFK International Airport, New York

CAS #	Analyte	Units	Client Sample ID: BH-204-2 S-5	BH-204-6 S-5	BH-204-7 S-5	BH-204-5 S-5	BH-204-8 S-5
		Veritech Sample ID:	AA99928	AA99931	AA99933	AA99995	AA99997
		Sampling Date:	12/20/99	12/20/99	12/20/99	12/21/99	12/21/99
			MG/KG	MG/KG	MG/KG	MG/KG	MG/KG
120-82-1	1,2,4-Trichlorobenzene		0.18 U	0.2 U	0.2 U	0.2 U	0.19 U
95-50-1	1,2-Dichlorobenzene		0.18 U	0.2 U	0.2 U	0.2 U	0.19 U
122-66-7	1,2-Diphenylhydrazine		0.036 U	0.039 U	0.039 U	0.039 U	0.037 U
541-73-1	1,3-Dichlorobenzene		0.18 U	0.2 U	0.2 U	0.2 U	0.19 U
106-46-7	1,4-Dichlorobenzene		0.18 U	0.2 U	0.2 U	0.2 U	0.19 U
95-95-4	2,4,5-Trichlorophenol		0.18 U	0.2 U	0.2 U	0.2 U	0.19 U
88-06-2	2,4,6-Trichlorophenol		0.18 U	0.2 U	0.2 U	0.2 U	0.19 U
120-83-2	2,4-Dichlorophenol		0.18 U	0.2 U	0.2 U	0.2 U	0.19 U
105-67-9	2,4-Dimethylphenol		0.18 U	0.2 U	0.2 U	0.2 U	0.19 U
51-28-5	2,4-Dinitrophenol		0.36 U	0.39 U	0.39 U	0.39 U	0.37 U
121-14-2	2,4-Dinitrotoluene		0.18 U	0.2 U	0.2 U	0.2 U	0.19 U
606-20-2	2,6-Dinitrotoluene		0.18 U	0.2 U	0.2 U	0.2 U	0.19 U
91-58-7	2-Chloronaphthalene		0.18 U	0.2 U	0.2 U	0.2 U	0.19 U
95-57-8	2-Chlorophenol		0.18 U	0.2 U	0.2 U	0.2 U	0.19 U
91-57-6	2-Methylnaphthalene		0.18 U	0.2 U	0.2 U	0.2 U	0.19 U
95-48-7	2-Methylphenol		0.18 U	0.2 U	0.2 U	0.2 U	0.19 U
88-74-4	2-Nitroaniline		0.18 U	0.2 U	0.2 U	0.2 U	0.19 U
88-75-5	2-Nitrophenol		0.18 U	0.2 U	0.2 U	0.2 U	0.19 U
106-44-5	3&4-Methylphenol		0.18 U	0.2 U	0.2 U	0.2 U	0.19 U
91-94-1	3,3'-Dichlorobenzidine		0.18 U	0.2 U	0.2 U	0.2 U	0.19 U
99-09-2	3-Nitroaniline		0.18 U	0.2 U	0.2 U	0.2 U	0.19 U
121-14-2	4,6-Dinitro-2-methylphenol		0.18 U	0.2 U	0.2 U	0.2 U	0.19 U
101-55-3	4-Bromophenyl-phenylether		0.18 U	0.2 U	0.2 U	0.2 U	0.19 U
59-50-7	4-Chloro-3-methylphenol		0.18 U	0.2 U	0.2 U	0.2 U	0.19 U
106-47-8	4-Chloroaniline		0.18 U	0.2 U	0.2 U	0.2 U	0.19 U
7005-72-3	4-Chlorophenyl-phenylether		0.18 U	0.2 U	0.2 U	0.2 U	0.19 U
100-01-6	4-Nitroaniline		0.18 U	0.2 U	0.2 U	0.2 U	0.19 U
100-02-7	4-Nitrophenol		0.18 U	0.2 U	0.2 U	0.2 U	0.19 U
83-32-9	Acenaphthene		0.18 U	0.2 U	0.2 U	0.2 U	0.19 U
208-96-8	Acenaphthylene		0.18 U	0.2 U	0.2 U	0.2 U	0.19 U
120-12-7	Anthracene		0.18 U	0.2 U	0.2 U	0.2 U	0.19 U
92-87-5	Benzidine		0.36 U	0.39 U	0.39 U	0.39 U	0.37 U
56-55-3	Benzo[a]anthracene		0.18 U	0.2 U	0.2 U	0.2 U	0.19 U
50-32-8	Benzo[a]pyrene		0.18 U	0.2 U	0.2 U	0.2 U	0.19 U
205-99-2	Benzo[b]Fluoranthene		0.18 U	0.2 U	0.2 U	0.2 U	0.19 U
191-24-2	Benzo[g,h,i]perylene		0.18 U	0.2 U	0.2 U	0.2 U	0.19 U
207-08-9	Benzo[k]Fluoranthene		0.18 U	0.2 U	0.2 U	0.2 U	0.19 U
65-85-0	Benzoic Acid		0.36 U	0.39 U	0.39 U	0.39 U	0.37 U
100-51-6	Benzyl Alcohol		0.18 U	0.2 U	0.2 U	0.2 U	0.19 U
111-91-1	Bis(2-Chloroethoxy)Methane		0.18 U	0.2 U	0.2 U	0.2 U	0.19 U
111-44-4	Bis(2-Chloroethyl)ether		0.18 U	0.2 U	0.2 U	0.2 U	0.19 U
108-60-1	Bis(2-Chloroisopropyl)ether		0.18 U	0.2 U	0.2 U	0.2 U	0.19 U
117-81-7	Bis(2-Ethylhexyl)phthalate		0.059 J	0.2 U	0.2 U	0.044 J	0.056 J
85-68-7	Butylbenzylphthalate		0.18 U	0.2 U	0.2 U	0.2 U	0.19 U
86-74-8	Carbazole		0.18 U	0.2 U	0.2 U	0.2 U	0.19 U
218-01-9	Chrysene		0.18 U	0.2 U	0.2 U	0.2 U	0.19 U
84-74-2	Di-n-butylphthalate		0.067 J	0.2 U	0.2 U	0.2 U	0.061 JB
117-84-0	Di-n-octylphthalate		0.18 U	0.2 U	0.2 U	0.2 U	0.043 J
53-70-3	Dibenzo[a,h]anthracene		0.18 U	0.2 U	0.2 U	0.2 U	0.19 U
132-64-9	Dibenzofuran		0.18 U	0.2 U	0.2 U	0.2 U	0.19 U
84-66-2	Diethylphthalate		0.18 U	0.2 U	0.2 U	0.2 U	0.19 U
131-11-3	Dimethylphthalate		0.18 U	0.2 U	0.2 U	0.2 U	0.19 U
206-44-0	Fluoranthene		0.18 U	0.2 U	0.2 U	0.2 U	0.19 U
86-73-7	Fluorene		0.18 U	0.2 U	0.2 U	0.2 U	0.19 U
118-74-1	Hexachlorobenzene		0.18 U	0.2 U	0.2 U	0.2 U	0.19 U
87-68-3	Hexachlorobutadiene		0.18 U	0.2 U	0.2 U	0.2 U	0.19 U
77-47-4	Hexachlorocyclopentadiene		0.54 U	0.59 U	0.59 U	0.59 U	0.56 U
67-72-1	Hexachloroethane		0.18 U	0.2 U	0.2 U	0.2 U	0.19 U
193-39-5	Indeno[1,2,3-cd]pyrene		0.18 U	0.2 U	0.2 U	0.2 U	0.19 U
78-59-1	Isophorone		0.18 U	0.2 U	0.2 U	0.2 U	0.19 U
621-64-7	N-Nitroso-Di-N-Propylamine		0.18 U	0.2 U	0.2 U	0.2 U	0.19 U
62-75-9	N-Nitrosodimethylamine		0.18 U	0.2 U	0.2 U	0.2 U	0.19 U
86-30-6	N-Nitrosodiphenylamine		0.18 U	0.2 U	0.2 U	0.2 U	0.19 U
91-20-3	Naphthalene		0.18 U	0.2 U	0.2 U	0.2 U	0.19 U
98-95-3	Nitrobenzene		0.18 U	0.2 U	0.2 U	0.2 U	0.19 U
87-86-5	Pentachlorophenol		0.18 U	0.2 U	0.2 U	0.2 U	0.19 U
85-01-8	Phenanthrene		0.18 U	0.2 U	0.2 U	0.2 U	0.19 U
108-95-2	Phenol		0.18 U	0.2 U	0.2 U	0.2 U	0.19 U
129-00-0	Pyrene		0.18 U	0.2 U	0.2 U	0.2 U	0.19 U
110-86-1	Pyridine		0.54 U	0.59 U	0.59 U	0.59 U	0.56 U

MG/KG Milligrams per Kilogram
U Not detected at the Method Detection Limit (MDL)/Practical Quantitation Level (PQL), value is shown adjacent to U
J Analyte detected below MDL/PQL and is estimated

Table 5 C
Subsurface Soil Analytical Data Results
Building 204
JFK International Airport, New York

	Client Sample ID:	BH-204-1/MW-1 S-5	BH-204-4/MW-3 S-5	BH-204-9/MW-4 S-5	BH-204-10/MW-5 S-5
	Veritech Sample ID:	AA99701	AA99706	AA99708	AA99710
	Sampling Date:	12/16/99	12/17/99	12/17/99	12/17/99
CAS #	Analyte Units:	MG/KG	MG/KG	MG/KG	MG/KG
12674-11-2	Aroclor-1016	0.019 U	0.021 U	0.018 U	0.018 U
11104-28-2	Aroclor-1221	0.019 U	0.021 U	0.018 U	0.018 U
11141-16-5	Aroclor-1232	0.019 U	0.021 U	0.018 U	0.018 U
53469-21-9	Aroclor-1242	0.019 U	0.021 U	0.018 U	0.018 U
12672-29-6	Aroclor-1248	0.019 U	0.021 U	0.018 U	0.018 U
11097-69-1	Aroclor-1254	0.019 U	0.021 U	0.018 U	0.018 U
11096-82-5	Aroclor-1260	0.019 U	0.021 U	0.018 U	0.018 U
309-00-2	Aldrin	0.0037 U	0.0042 U	0.0035 U	0.0037 U
319-84-6	Alpha-BHC	0.0037 U	0.0042 U	0.0035 U	0.0037 U
319-85-7	Beta-BHC	0.0037 U	0.0042 U	0.0035 U	0.0037 U
57-74-9	Chlordane	0.0075 U	0.0083 U	0.0071 U	0.0073 U
319-86-8	Delta-BHC	0.0037 U	0.0042 U	0.0035 U	0.0037 U
60-57-1	Dieldrin	0.0037 U	0.0042 U	0.0035 U	0.0037 U
959-98-8	Endosulfan I	0.0037 U	0.0042 U	0.0035 U	0.0037 U
33213-65-9	Endosulfan II	0.0037 U	0.0042 U	0.0035 U	0.0037 U
1031-07-8	Endosulfan Sulfate	0.0037 U	0.0042 U	0.0035 U	0.0037 U
72-20-8	Endrin	0.0037 U	0.0042 U	0.0035 U	0.0037 U
7421-93-4	Endrin Aldehyde	0.0037 U	0.0042 U	0.0035 U	0.0037 U
53494-70-5	Endrin Ketone	0.0037 U	0.0042 U	0.0035 U	0.0037 U
58-89-9	Gamma-BHC	0.0037 U	0.0042 U	0.0035 U	0.0037 U
76-44-8	Heptachlor	0.0037 U	0.0042 U	0.0035 U	0.0037 U
1024-57-3	Heptachlor Epoxide	0.0037 U	0.0042 U	0.0035 U	0.0037 U
72-43-5	Methoxychlor	0.0037 U	0.0042 U	0.0035 U	0.0037 U
72-54-8	P,P'-DDD	0.0037 U	0.0042 U	0.0035 U	0.0037 U
72-55-9	P,P'-DDE	0.0037 U	0.0042 U	0.0035 U	0.0037 U
50-29-3	P,P'-DDT	0.0037 U	0.0042 U	0.0035 U	0.0037 U
8001-35-2	Toxaphene	0.037 U	0.042 U	0.035 U	0.037 U

MG/KG: Milligrams per Kilogram
U Not detected at the Method Detection Limit (MDL)/Practical Quantitation Level (PQL), Value is shown adjacent to U
J Analyte detected below MDL/PQL and is estimated

Table 5 C
Subsurface Soil Analytical Data Results
Building 204
JFK International Airport, New York

	Client Sample ID:	BH-204-3/MW-2 S-5	BH-204-2 S-5	BH-204-6 S-5	BH-204-7 S-5	BH-204-5 S-5	BH-204-8 S-5
	Verltech Sample ID:	AA99927	AA99929	AA99931	AA99933	AA99995	AA99997
	Sampling Date:	12/20/99	12/20/99	12/20/99	12/20/99	12/21/99	12/21/99
CAS #	Analyte Units:	MG/KG	MG/KG	MG/KG	MG/KG	MG/KG	MG/KG
12674-11-2	Aroclor-1016	0.019 U	0.018 U	0.02 U	0.02 U	0.02 U	0.019 U
11104-28-2	Aroclor-1221	0.019 U	0.018 U	0.02 U	0.02 U	0.02 U	0.019 U
11141-16-5	Aroclor-1232	0.019 U	0.018 U	0.02 U	0.02 U	0.02 U	0.019 U
53469-21-9	Aroclor-1242	0.019 U	0.018 U	0.02 U	0.02 U	0.02 U	0.019 U
12672-29-6	Aroclor-1248	0.019 U	0.018 U	0.02 U	0.02 U	0.02 U	0.019 U
11097-69-1	Aroclor-1254	0.019 U	0.018 U	0.02 U	0.02 U	0.02 U	0.019 U
11096-82-5	Aroclor-1260	0.019 U	0.018 U	0.02 U	0.02 U	0.02 U	0.019 U
309-00-2	Aldrin	0.0038 U	0.0036 U	0.0039 U	0.0039 U	0.0039 U	0.0037 U
319-84-6	Alpha-BHC	0.0038 U	0.0036 U	0.0039 U	0.0039 U	0.0039 U	0.0037 U
319-85-7	Beta-BHC	0.0038 U	0.0036 U	0.0039 U	0.0039 U	0.0039 U	0.0037 U
57-74-9	Chlordane	0.0077 U	0.0072 U	0.0078 U	0.0078 U	0.0078 U	0.0074 U
319-86-8	Delta-BHC	0.0038 U	0.0036 U	0.0039 U	0.0039 U	0.0039 U	0.0037 U
60-57-1	Dieldrin	0.0038 U	0.0036 U	0.0039 U	0.0039 U	0.0039 U	0.0037 U
959-98-8	Endosulfan I	0.0038 U	0.0036 U	0.0039 U	0.0039 U	0.0039 U	0.0037 U
33213-65-9	Endosulfan II	0.0038 U	0.0036 U	0.0039 U	0.0039 U	0.0039 U	0.0037 U
1031-07-8	Endosulfan Sulfate	0.0038 U	0.0036 U	0.0039 U	0.0039 U	0.0039 U	0.0037 U
72-20-8	Endrin	0.0038 U	0.0036 U	0.0039 U	0.0039 U	0.0039 U	0.0037 U
7421-93-4	Endrin Aldehyde	0.0038 U	0.0036 U	0.0039 U	0.0039 U	0.0039 U	0.0037 U
53494-70-5	Endrin Ketone	0.0038 U	0.0036 U	0.0039 U	0.0039 U	0.0039 U	0.0037 U
58-89-9	Gamma-BHC	0.0038 U	0.0036 U	0.0039 U	0.0039 U	0.0039 U	0.0037 U
76-44-8	Heptachlor	0.0038 U	0.0036 U	0.0039 U	0.0039 U	0.0039 U	0.0037 U
1024-57-3	Heptachlor Epoxide	0.0038 U	0.0036 U	0.0039 U	0.0039 U	0.0039 U	0.0037 U
72-43-5	Methoxychlor	0.0038 U	0.0036 U	0.0039 U	0.0039 U	0.0039 U	0.0037 U
72-54-8	P,P'-DDD	0.0038 U	0.0036 U	0.0039 U	0.0039 U	0.0039 U	0.0037 U
72-55-9	P,P'-DDE	0.0038 U	0.0036 U	0.0039 U	0.0039 U	0.0039 U	0.0037 U
50-29-3	P,P'-DDT	0.0038 U	0.0036 U	0.0039 U	0.0039 U	0.0039 U	0.0037 U
8001-35-2	Toxaphene	0.038 U	0.036 U	0.039 U	0.039 U	0.039 U	0.037 U

MG/KG Milligrams per Kilogram
U Not detected at the Method Detection Limit (MDL)/Practical Quantitation Level (PQL). Value is shown adjacent to U
J Analyte detected below MDL/PQL and is estimated

Table 5 D
Subsurface Soil Analytical Data Results
Building 204
JFK International Airport, New York

CAS #	Analyte	Units:	Client Sample ID: BH-204-1/MW-1 S-5	BH-204-4/MW-3 S-5	BH-204-9/MW-4 S-5	BH-204-10/MW-5 S-5
		Veritech Sample ID:	AA99701	AA99706	AA99708	AA99710
		Sampling Date:	12/16/99	12/17/99	12/17/99	12/17/99
		Units:	MG/KG	MG/KG	MG/KG	MG/KG
7440-36-0	Antimony	ppm	1.5 U	1.6 U	1.4 U	1.4 U
7440-38-2	Arsenic	ppm	2.9	2.4 U	2 U	2.1 U
7440-39-3	Barium	ppm	30	30	17	25
7440-41-7	Beryllium	ppm	0.2 U	0.23 U	0.19 U	0.2 U
7440-43-9	Cadmium	ppm	0.34 U	0.37 U	0.32 U	0.33 U
7440-47-3	Chromium	ppm	14	10	6.7	4
7440-50-8	Copper	ppm	9.8	6.1	6.4	5.9
7439-92-1	Lead	ppm	21	2.6 U	2.2 U	2.3 U
7439-97-6	Mercury	ppm	0.21	0.04 U	0.034 U	0.036 U
7440-02-0	Nickel	ppm	11	14	11	12
7782-49-2	Selenium	ppm	3 U	3.4 U	2.9 U	3 U
7440-22-4	Silver	ppm	1.3 U	1.5 U	1.3 U	1.3 U
7440-28-0	Thallium	ppm	1.1 U	1.2 U	1.1 U	1.1 U
7440-66-6	Zinc	ppm	26	83	19 U	20 U
57-12-5	Cyanide	ppm	0.28 U	0.31 U	0.27 U	0.27 U
108-95-2	Phenol	ppm	1.4 U	1.6 U	1.3 U	1.4 U
	Total Petroleum Hydrocarbon	ppm	98	63	37	41
	% Solids	Percent	89	80	94	91

MG/KG Milligrams per Kilogram
U: Not detected at the corresponding Method Detection Limit (MDL)/Practical Quantitation Level (PQL), value is shown adjacent to U

Table 5 D
Subsurface Soil Analytical Data Results
Building 204
JFK International Airport, New York

CAS #	Analyte	Units:	Client Sample ID: BH-204-3/MW-2 S-5	BH-204-2 S-5	BH-204-6 S-5	BH-204-7 S-5	BH-204-5 S-5
		Veritech Sample ID:	AA99927	AA99929	AA99931	AA99933	AA99995
		Sampling Date:	12/20/99	12/20/99	12/20/99	12/20/99	12/21/99
		Units:	MG/KG	MG/KG	MG/KG	MG/KG	MG/KG
7440-36-0	Antimony	ppm	1.5 U	1.4 U	1.5 U	1.5 U	1.4 U
7440-38-2	Arsenic	ppm	2.2 U	2.3	2.2 U	2.2 U	2 U
7440-39-3	Barium	ppm	20	54	20	25	13
7440-41-7	Beryllium	ppm	0.21 U	0.19 U	0.21 U	0.21 U	0.19 U
7440-43-9	Cadmium	ppm	0.34 U	0.32 U	0.35 U	0.35 U	0.32 U
7440-47-3	Chromium	ppm	9	14	8.2	7.8	4.4
7440-50-8	Copper	ppm	5.5	21	7.8	9.2	7
7439-92-1	Lead	ppm	5.8	8.5	7.2	2.5 U	2.2 U
7439-97-6	Mercury	ppm	0.18	0.035 U	0.038 U	0.038 U	0.034 U
7440-02-0	Nickel	ppm	6.6	18	14	15	10
7782-49-2	Selenium	ppm	3.1 U	2.9 U	3.2 U	3.2 U	2.9 U
7440-22-4	Silver	ppm	1.4 U	1.3 U	1.4 U	1.4 U	1.3 U
7440-28-0	Thallium	ppm	1.1 U	1.1 U	1.2 U	1.2 U	1.1 U
7440-66-6	Zinc	ppm	19 U	34	21 U	21 U	19 U
57-12-5	Cyanide	ppm	0.29 U	0.27 U	0.29 U	0.29 U	0.29 U
108-95-2	Phenol	ppm	1.4 U	1.3 U	1.5 U	1.6 U	1.5 U
	Total Petroleum Hydrocarbon	ppm	39 U	45	40 U	46	40 U
	% Solids	Percent	87	93	85	85	85

MG/KG, Milligrams per Kilogram
U, Not detected at the corresponding Method Detection Limit (MDL)/Practical Quantitation Level (PQL), value is shown adjacent to U

Table 5 D
Subsurface Soil Analytical Data Results
Building 204
JFK International Airport, New York

		Client Sample ID:	BH-204-8 S-5
		Veritech Sample ID:	AA99997
		Sampling Date:	12/21/99
CAS #	Analyte	Units.	MG/KG
7440-36-0	Antimony	ppm	1.4 U
7440-38-2	Arsenic	ppm	2.1 U
7440-39-3	Barium	ppm	15
7440-41-7	Beryllium	ppm	0.2 U
7440-43-9	Cadmium	ppm	0.33 U
7440-47-3	Chromium	ppm	5.8
7440-50-8	Copper	ppm	7.3
7439-92-1	Lead	ppm	2.3 U
7439-97-6	Mercury	ppm	0.036 U
7440-02-0	Nickel	ppm	15
7782-49-2	Selenium	ppm	3 U
7440-22-4	Silver	ppm	1.3 U
7440-28-0	Thallium	ppm	1.1 U
7440-66-6	Zinc	ppm	20 U
57-12-5	Cyanide	ppm	0.28 U
108-95-2	Phenol	ppm	1.4 U
	Total Petroleum Hydrocarbon	ppm	38 U
	% Solids	Percent	80

MG/KG Milligrams per Kilogram
U Not detected at the corresponding Method Detection Limit (MDL)/Practical Quantitation Level (PQL), value is shown adjacent to U

Table 5 A
Ground Water Analytical Data Results
Building 204
JFK International Airport, New York

CAS #	Analyte	Units:	MW-1	MW-2	MW-3	MW-4	MW-5	MW-204-DUP
		Client Sample ID:	MW-1	MW-2	MW-3	MW-4	MW-5	MW-204-DUP
		Varilach Sample ID:	AB00216	AB00217	AB00218	AB00219	AB00220	AB00221
		Sampling Date:	12/27/99	12/27/99	12/27/99	12/27/99	12/27/99	12/27/99
		Units:	UG/L	UG/L	UG/L	UG/L	UG/L	UG/L
630-20-6	1,1,1,2-Tetrachloroethane		1 U	1 U	1 U	1 U	10 U	1 U
71-55-6	1,1,1-Trichloroethane		5 U	5 U	5 U	5 U	50 U	5 U
79-34-5	1,1,2,2-Tetrachloroethane		5 U	5 U	5 U	5 U	50 U	5 U
79-00-5	1,1,2-Trichloroethane		5 U	5 U	5 U	5 U	50 U	5 U
75-34-3	1,1-Dichloroethane		5 U	5 U	5 U	5 U	50 U	5 U
75-35-4	1,1-Dichloroethene		5 U	5 U	5 U	5 U	50 U	5 U
95-50-1	1,2-Dichlorobenzene		5 U	5 U	5 U	5 U	50 U	5 U
107-06-2	1,2-Dichloroethane		5 U	5 U	5 U	5 U	50 U	5 U
78-87-5	1,2-Dichloropropane		5 U	5 U	5 U	5 U	50 U	5 U
541-73-1	1,3-Dichlorobenzene		5 U	5 U	5 U	5 U	50 U	5 U
106-46-7	1,4-Dichlorobenzene		5 U	5 U	5 U	5 U	50 U	5 U
78-93-3	2-Butanone		25 U	25 U	25 U	25 U	250 U	25 U
110-75-8	2-Chloroethylvinylether		5 U	5 U	5 U	5 U	50 U	5 U
591-78-6	2-Hexanone		20 U	20 U	20 U	20 U	200 U	20 U
108-10-1	4-Methyl-2-Pentanone		20 U	20 U	20 U	20 U	200 U	20 U
67-64-1	Acetone		20 U	20 U	20 U	20 U	200 U	20 U
107-02-8	Acrolein		15 U	15 U	15 U	15 U	150 U	15 U
107-13-1	Acrylonitrile		1 8 U	1 8 U	1 8 U	1 8 U	18 U	1 8 U
71-43-2	Benzene		1 U	1 U	1 U	1 U	10 U	1 U
75-27-4	Bromodichloromethane		5 U	1.2 J	5 U	5 U	50 U	5 U
75-25-2	Bromoform		5 U	5 U	5 U	5 U	50 U	5 U
74-83-9	Bromomethane		5 U	5 U	5 U	5 U	50 U	5 U
75-15-0	Carbon Disulfide		5 U	5 U	5 U	5 U	50 U	5 U
56-23-5	Carbon Tetrachloride		5 U	5 U	5 U	5 U	50 U	5 U
108-90-7	Chlorobenzene		5 U	5 U	5 U	5 U	50 U	5 U
75-00-3	Chloroethane		5 U	5 U	5 U	5 U	50 U	5 U
67-66-3	Chloroform		5 U	27	5 U	1 8 J	50 U	25
74-87-3	Chloromethane		5 U	5 U	5 U	5 U	50 U	5 U
156-59-2	cis-1,2-Dichloroethene		5 U	5 U	5 U	5 U	50 U	5 U
10061-01-5	cis-1,3-Dichloropropene		5 U	5 U	5 U	5 U	50 U	5 U
108-20-3	di-Isopropyl-ether		5 U	5 U	5 U	5 U	50 U	5 U
124-48-1	Dibromochloromethane		5 U	5 U	5 U	5 U	50 U	5 U
100-41-4	Ethylbenzene		1 U	1 U	1 U	1 U	10 U	1 U
1330-20-7	M&P-Xylenes		2 U	2 U	2 U	2 U	20 U	2 U
1634-04-4	Methyl-t-butyl ether		1 U	1 U	1 U	1.8	1800	1 U
75-09-2	Methylene Chloride		1.3 JB	1 8 JB	1 3 JB	1 2 JB	13 JB	2 JB
95-47-6	O-Xylene		1 U	1 U	1 U	1 U	10 U	1 U
100-42-5	Styrene		1 U	1 U	1 U	1 U	10 U	1 U
75-65-0	t-Butyl Alcohol		10 U	10 U	10 U	10 U	100 U	10 U
127-18-4	Tetrachloroethene		5 U	5 U	5 U	5 U	50 U	5 U
108-88-3	Toluene		1 U	1 U	1 U	1 U	10 U	1 U
156-60-5	trans-1,2-Dichloroethene		5 U	5 U	5 U	5 U	50 U	5 U
10061-02-6	trans-1,3-Dichloropropene		5 U	5 U	5 U	5 U	50 U	5 U
79-01-6	Trichloroethene		5 U	5 U	5 U	5 U	50 U	5 U
75-69-4	Trichlorofluoromethane		5 U	5 U	5 U	5 U	50 U	5 U
108-05-4	Vinyl Acetate		10 U	10 U	10 U	10 U	100 U	10 U
75-01-4	Vinyl Chloride		5 U	5 U	5 U	5 U	50 U	5 U

UG/L- Micrograms per Litre
U Not detected at the Method Detection Limit (MDL), value is shown adjacent to U
J Analyte detected below MDL and is estimated

Table 6 A
Ground Water Analytical Data Results
Building 204
JFK International Airport, New York

CAS #	Analyte	Client Sample ID:	F.B. 12/27	T.B. 12/27
		Veritech Sample ID:	AB00222	AB00223
		Sampling Date:	12/27/99	12/27/99
		Units:	UG/L	UG/L
630-20-6	1,1,1,2-Tetrachloroethane		1 U	1 U
71-55-6	1,1,1-Trichloroethane		5 U	5 U
79-34-5	1,1,2,2-Tetrachloroethane		5 U	5 U
79-00-5	1,1,2-Trichloroethane		5 U	5 U
75-34-3	1,1-Dichloroethane		5 U	5 U
75-35-4	1,1-Dichloroethene		5 U	5 U
95-50-1	1,2-Dichlorobenzene		5 U	5 U
107-06-2	1,2-Dichloroethane		5 U	5 U
78-87-5	1,2-Dichloropropane		5 U	5 U
541-73-1	1,3-Dichlorobenzene		5 U	5 U
106-46-7	1,4-Dichlorobenzene		5 U	5 U
78-93-3	2-Butanone		25 U	25 U
110-75-8	2-Chloroethylvinylether		5 U	5 U
591-78-6	2-Hexanone		20 U	20 U
108-10-1	4-Methyl-2-Pentanone		20 U	20 U
67-64-1	Acetone		20 U	20 U
107-02-8	Acrolein		15 U	15 U
107-13-1	Acrylonitrile		1.8 U	1.8 U
71-43-2	Benzene		1 U	1 U
75-27-4	Bromodichloromethane		5 U	5 U
75-25-2	Bromoform		5 U	5 U
74-83-9	Bromomethane		5 U	5 U
75-15-0	Carbon Disulfide		5 U	5 U
56-23-5	Carbon Tetrachloride		5 U	5 U
108-90-7	Chlorobenzene		5 U	5 U
75-00-3	Chloroethane		5 U	5 U
67-66-3	Chloroform		5 U	5 U
74-87-3	Chloromethane		5 U	5 U
156-59-2	cis-1,2-Dichloroethene		5 U	5 U
10061-01-5	cis-1,3-Dichloropropene		5 U	5 U
108-20-3	di-Isopropyl-ether		5 U	5 U
124-48-1	Dibromochloromethane		5 U	5 U
100-41-4	Ethylbenzene		1 U	1 U
1330-20-7	M&P-Xylenes		2 U	2 U
1634-04-4	Methyl-t-butyl ether		1 U	1 U
75-09-2	Methylene Chloride		5 U	5 U
95-47-6	O-Xylene		1 U	1 U
100-42-5	Styrene		1 U	1 U
75-65-0	t-Butyl Alcohol		10 U	10 U
127-18-4	Tetrachloroethene		5 U	5 U
108-88-3	Toluene		1 U	1 U
156-60-5	trans-1,2-Dichloroethene		5 U	5 U
10061-02-6	trans-1,3-Dichloropropene		5 U	5 U
79-01-6	Trichloroethene		5 U	5 U
75-69-4	Trichlorofluoromethane		5 U	5 U
108-05-4	Vinyl Acetate		10 U	10 U
75-01-4	Vinyl Chloride		5 U	5 U

UG/L: Micrograms per Litre
U: Not detected at the Method Detection Limit (MDL), value is shown adjacent to U
J Analyte detected below MDL and is estimated

Table 5 B
Ground Water Analytical Data Results
Building 204
JFK International Airport, New York

CAS #	Analyte	Client Sample ID:	MW-1	MW-2	MW-3	MW-4	MW-5	MW-204-DUP	F.B. 12/27
		Veritech Sample ID:	AB00216	AB00217	AB00218	AB00219	AB00220	AB00221	AB00222
		Sampling Date:	12/27/99	12/27/99	12/27/99	12/27/99	12/27/99	12/27/99	12/27/99
		Units:	UG/L	UG/L	UG/L	UG/L	UG/L	UG/L	UG/L
120-82-1	1,2,4-Trichlorobenzene		5 U	5 U	5 U	5 U	5 U	5 U	5 U
95-50-1	1,2-Dichlorobenzene		5 U	5 U	5 U	5 U	5 U	5 U	5 U
122-66-7	1,2-Diphenylhydrazine		1 U	1 U	1 U	1 U	1 U	1 U	1 U
541-73-1	1,3-Dichlorobenzene		5 U	5 U	5 U	5 U	5 U	5 U	5 U
106-46-7	1,4-Dichlorobenzene		5 U	5 U	5 U	5 U	5 U	5 U	5 U
95-95-4	2,4,5-Trichlorophenol		5 U	5 U	5 U	5 U	5 U	5 U	5 U
88-06-2	2,4,6-Trichlorophenol		5 U	5 U	5 U	5 U	5 U	5 U	5 U
120-83-2	2,4-Dichlorophenol		5 U	5 U	5 U	5 U	5 U	5 U	5 U
105-67-9	2,4-Dimethylphenol		5 U	5 U	5 U	5 U	5 U	5 U	5 U
51-28-5	2,4-Dinitrophenol		10 U	10 U	10 U	10 U	10 U	10 U	10 U
121-14-2	2,4-Dinitrotoluene		5 U	5 U	5 U	5 U	5 U	5 U	5 U
606-20-2	2,6-Dinitrotoluene		5 U	5 U	5 U	5 U	5 U	5 U	5 U
91-58-7	2-Chloronaphthalene		5 U	5 U	5 U	5 U	5 U	5 U	5 U
95-57-8	2-Chlorophenol		5 U	5 U	5 U	5 U	5 U	5 U	5 U
91-57-6	2-Methylnaphthalene		5 U	5 U	5 U	5 U	5 U	5 U	5 U
95-48-7	2-Methylphenol		5 U	5 U	5 U	5 U	5 U	5 U	5 U
88-74-4	2-Nitroaniline		5 U	5 U	5 U	5 U	5 U	5 U	5 U
88-75-5	2-Nitrophenol		5 U	5 U	5 U	5 U	5 U	5 U	5 U
106-44-5	3&4-Methylphenol		5 U	5 U	5 U	5 U	5 U	5 U	5 U
91-94-1	3,3'-Dichlorobenzidine		5 U	5 U	5 U	5 U	5 U	5 U	5 U
99-09-2	3-Nitroaniline		5 U	5 U	5 U	5 U	5 U	5 U	5 U
121-14-2	4,6-Dinitro-2-methylphenol		5 U	5 U	5 U	5 U	5 U	5 U	5 U
101-55-3	4-Bromophenyl-phenylether		5 U	5 U	5 U	5 U	5 U	5 U	5 U
59-50-7	4-Chloro-3-methylphenol		5 U	5 U	5 U	5 U	5 U	5 U	5 U
106-47-8	4-Chloroaniline		5 U	5 U	5 U	5 U	5 U	5 U	5 U
7005-72-3	4-Chlorophenyl-phenylether		5 U	5 U	5 U	5 U	5 U	5 U	5 U
100-01-6	4-Nitroaniline		5 U	5 U	5 U	5 U	5 U	5 U	5 U
100-02-7	4-Nitrophenol		5 U	5 U	5 U	5 U	5 U	5 U	5 U
83-32-9	Acenaphthene		5 U	5 U	5 U	5 U	5 U	5 U	5 U
208-96-8	Acenaphthylene		5 U	5 U	5 U	5 U	5 U	5 U	5 U
120-12-7	Anthracene		5 U	5 U	5 U	5 U	5 U	5 U	5 U
92-87-5	Benzidine		10 U	10 U	10 U	10 U	10 U	10 U	10 U
56-55-3	Benzo[a]anthracene		5 U	5 U	5 U	5 U	5 U	5 U	5 U
50-32-8	Benzo[a]pyrene		5 U	5 U	5 U	5 U	5 U	5 U	5 U
205-99-2	Benzo[b]Fluoranthene		5 U	5 U	5 U	5 U	5 U	5 U	5 U
191-24-2	Benzo[g,h,i]perylene		5 U	5 U	5 U	5 U	5 U	5 U	5 U
207-08-9	Benzo[k]Fluoranthene		5 U	5 U	5 U	5 U	5 U	5 U	5 U
65-85-0	Benzoic Acid		10 U	10 U	10 U	10 U	10 U	10 U	10 U
100-51-6	Benzyl Alcohol		5 U	5 U	5 U	5 U	5 U	5 U	5 U
111-91-1	Bis(2-Chloroethoxy)Methane		5 U	5 U	5 U	5 U	5 U	5 U	5 U
111-44-4	Bis(2-Chloroethyl)ether		5 U	5 U	5 U	5 U	5 U	5 U	5 U
108-60-1	Bis(2-Chloroisopropyl)ether		5 U	5 U	5 U	5 U	5 U	5 U	5 U
117-81-7	Bis(2-Ethylhexyl)phthalate		5 U	5 U	2 J	5 U	5 U	1.1 J	5 U
85-68-7	Butylbenzylphthalate		5 U	5 U	5 U	5 U	5 U	5 U	5 U
86-74-8	Carbazole		5 U	5 U	5 U	5 U	5 U	5 U	5 U
218-01-9	Chrysene		5 U	5 U	5 U	5 U	5 U	5 U	5 U
84-74-2	Di-n-butylphthalate		5 U	5 U	5 U	5 U	5 U	5 U	5 U
117-84-0	Di-n-octylphthalate		5 U	5 U	5 U	5 U	5 U	5 U	5 U
53-70-3	Dibenzo[a,h]anthracene		5 U	5 U	5 U	5 U	5 U	5 U	5 U
132-64-9	Dibenzofuran		5 U	5 U	5 U	5 U	5 U	5 U	5 U
84-66-2	Diethylphthalate		7.5 B	6.5 B	6.5 B	3.7 JB	5 U	5 U	5 U
131-11-3	Dimethylphthalate		5 U	5 U	5 U	5 U	5 U	5 U	5 U
206-44-0	Fluoranthene		5 U	5 U	5 U	5 U	5 U	5 U	5 U
86-73-7	Fluorene		5 U	5 U	5 U	5 U	5 U	5 U	5 U
118-74-1	Hexachlorobenzene		5 U	5 U	5 U	5 U	5 U	5 U	5 U
87-68-3	Hexachlorobutadiene		5 U	5 U	5 U	5 U	5 U	5 U	5 U
77-47-4	Hexachlorocyclopentadiene		15 U	15 U	15 U	15 U	15 U	15 U	15 U
67-72-1	Hexachloroethane		5 U	5 U	5 U	5 U	5 U	5 U	5 U
193-39-5	Indeno[1,2,3-cd]pyrene		5 U	5 U	5 U	5 U	5 U	5 U	5 U
78-59-1	Isophorone		5 U	5 U	5 U	5 U	5 U	5 U	5 U
621-64-7	N-Nitroso-Di-N-Propylamine		5 U	5 U	5 U	5 U	5 U	5 U	5 U
62-75-9	N-Nitrosodimethylamine		5 U	5 U	5 U	5 U	5 U	5 U	5 U
86-30-6	N-Nitrosodiphenylamine		5 U	5 U	5 U	5 U	5 U	5 U	5 U
91-20-3	Naphthalene		5 U	5 U	5 U	5 U	5 U	5 U	5 U
98-95-3	Nitrobenzene		5 U	5 U	5 U	5 U	5 U	5 U	5 U
87-86-5	Pentachlorophenol		5 U	5 U	5 U	5 U	5 U	5 U	5 U
85-01-8	Phenanthrene		5 U	5 U	5 U	5 U	5 U	5 U	5 U
108-95-2	Phenol		5 U	5 U	5 U	5 U	5 U	5 U	5 U
129-00-0	Pyrene		5 U	5 U	5 U	5 U	5 U	5 U	5 U
110-86-1	Pyridine		15 U	15 U	15 U	15 U	15 U	15 U	15 U

UG/L Micrograms per Liter
U Not detected at the Method Detection Limit (MDL), value is shown adjacent to U
J Analyte detected below MDL and is estimated

Table 6 C
Ground Water Analytical Data Results
Building 204
JFK International Airport, New York

CAS #	Analyte	Client Sample ID:	MW-1	MW-2	MW-3	MW-4	MW-5	MW-204-DUP
		Veritech Sample ID:	AB00216	AB00217	AB00218	AB00219	AB00220	AB00221
		Sampling Date:	12/27/99	12/27/99	12/27/99	12/27/99	12/27/99	12/27/99
		Units:	UG/L	UG/L	UG/L	UG/L	UG/L	UG/L
12674-11-2	Aroclor-1016		0 5 U	0 5 U	0 5 U	0 5 U	0 5 U	0 5 U
11104-28-2	Aroclor-1221		0 5 U	0 5 U	0 5 U	0 5 U	0 5 U	0 6 U
11141-16-5	Aroclor-1232		0 5 U	0 5 U	0 5 U	0 5 U	0 5 U	0.5 U
53469-21-9	Aroclor-1242		0 5 U	0 5 U	0 5 U	0 5 U	0 5 U	0 5 U
12672-29-6	Aroclor-1248		0 5 U	0 5 U	0.5 U	0 5 U	0 5 U	0 5 U
11097-69-1	Aroclor-1254		0 5 U	0 5 U	0 5 U	0 5 U	0 5 U	0 5 U
11096-82-5	Aroclor-1260		0 5 U	0 5 U	0.5 U	0 5 U	0 5 U	0.5 U
309-00-2	Aldrin		0 1 U	0 1 U	0 1 U	0 1 U	0.1 U	0 1 U
319-84-6	Alpha-BHC		0 1 U	0 1 U	0 1 U	0 1 U	0 1 U	0.1 U
319-85-7	Beta-BHC		0 1 U	0 1 U	0 1 U	0 1 U	0 1 U	0.1 U
57-74-9	Chlordane		0 2 U	0 2 U	0 2 U	0 2 U	0 2 U	0 2 U
319-86-8	Delta-BHC		0 1 U	0 1 U	0 1 U	0 1 U	0 1 U	0 1 U
60-57-1	Dieldrin		0 1 U	0 1 U	0.1 U	0.1 U	0 1 U	0 1 U
959-98-8	Endosulfan I		0 1 U	0 1 U	0 1 U	0 1 U	0 1 U	0.1 U
33213-65-9	Endosulfan II		0 1 U	0.1 U	0 1 U	0 1 U	0 1 U	0 1 U
1031-07-8	Endosulfan Sulfate		0.1 U	0 1 U	0.1 U	0 1 U	0 1 U	0 1 U
72-20-8	Endrin		0 1 U	0 1 U	0 1 U	0 1 U	0 1 U	0 1 U
7421-93-4	Endrin Aldehyde		0 1 U	0 1 U	0 1 U	0 1 U	0 1 U	0.1 U
53494-70-5	Endrin Ketone		0 1 U	0 1 U	0 1 U	0 1 U	0 1 U	0 1 U
58-89-9	Gamma-BHC		0 1 U	0.1 U	0 1 U	0.1 U	0 1 U	0 1 U
76-44-8	Heptachlor		0.1 U	0 1 U	0 1 U	0 1 U	0.1 U	0 1 U
1024-57-3	Heptachlor Epoxide		0 1 U	0 1 U	0 1 U	0 1 U	0 1 U	0 1 U
72-43-5	Methoxychlor		0 1 U	0 1 U	0.1 U	0 1 U	0 1 U	0 1 U
72-54-8	P,P'-DDD		0.1 U	0 1 U	0 1 U	0 1 U	0 1 U	0 1 U
72-55-9	P,P'-DDE		0 1 U	0 1 U	0 1 U	0 1 U	0 1 U	0 1 U
50-29-3	P,P'-DDT		0.1 U	0 19	0 1 U	0.17	0.1 U	0 16
8001-35-2	Toxaphene		1 U	1 U	1 U	1 U	1 U	1 U

UG/L: Micrograms per Liter
U: Not detected at the Method Detection Limit (MDL), value is shown adjacent to U
J: Analyte detected below MDL and is estimated

Table 6 C
Ground Water Analytical Data Results
Building 204
JFK International Airport, New York

		Client Sample ID:	F.B. 12/27
		Veritech Sample ID:	AB00222
		Sampling Date:	12/27/99
CAS #	Analyte	Units:	UG/L
12674-11-2	Aroclor-1016		0.5 U
11104-28-2	Aroclor-1221		0.5 U
11141-16-5	Aroclor-1232		0.5 U
53469-21-9	Aroclor-1242		0.5 U
12672-29-6	Aroclor-1248		0.5 U
11097-69-1	Aroclor-1254		0.5 U
11096-82-5	Aroclor-1260		0.5 U
309-00-2	Aldrin		0.1 U
319-84-6	Alpha-BHC		0.1 U
319-85-7	Beta-BHC		0.1 U
57-74-9	Chlordane		0.2 U
319-86-8	Delta-BHC		0.1 U
60-57-1	Dieldrin		0.1 U
959-98-8	Endosulfan I		0.1 U
33213-65-9	Endosulfan II		0.1 U
1031-07-8	Endosulfan Sulfate		0.1 U
72-20-8	Endrin		0.1 U
7421-93-4	Endrin Aldehyde		0.1 U
53494-70-5	Endrin Ketone		0.1 U
58-89-9	Gamma-BHC		0.1 U
76-44-8	Heptachlor		0.1 U
1024-57-3	Heptachlor Epoxide		0.1 U
72-43-5	Methoxychlor		0.1 U
72-54-8	P,P'-DDD		0.1 U
72-55-9	P,P'-DDE		0.1 U
50-29-3	P,P'-DDT		0.1 U
8001-35-2	Toxaphene		1 U

UG/L: Micrograms per Liter
U: Not detected at the Method Detection Limit (MDL), value is shown adjacent to U
J: Analyte detected below MDL and is estimated

Table 6 D
Ground Water Analytical Data Results
Building 204
JFK International Airport, New York

CAS #	Analyte	Client Sample ID: / Veritech Sample ID: / Sampling Date: / nits:	MW-1 AB00216 12/27/99 UG/L	MW-2 AB00217 12/27/99 UG/L	MW-3 AB00218 12/27/99 UG/L	MW-4 AB00219 12/27/99 UG/L	MW-5 AB00220 12/27/99 UG/L	W-204-DU AB00221 12/27/99 UG/L	F.B. 12/27 AB00222 12/27/99 UG/L
40-36-0	Antimony		10 U	10 U	10 U	10 U	10 U	10 U	10 U
40-38-2	Arsenic		21	6 U	6 U	19	6 U	6 U	6 U
40-39-3	Barium		170	53	28	610	71	56	9.4 U
40-41-7	Beryllium		0.7 U	0.7 U	0.7 U	0.7 U	0.7 U	0.7 U	0.7 U
40-43-9	Cadmium		1.1 U	1.1 U	1.1 U	1.1 U	1.1 U	1.1 U	1.1 U
40-47-3	Chromium		130	17	12	230	46	20	4.6 U
40-50-8	Copper		120	70 U	70 U	190	70 U	70 U	70 U
39-92-1	Lead		77	17	13	150	7.6 U	11	7.6 U
39-97-6	Mercury		0.6	0.3 U	0.3 U	0.3 U	0.3 U	0.3 U	0.3 U
40-02-0	Nickel		120	21	20	290	46	24	18 U
82-49-2	Selenium		40 U	40 U	40 U	40 U	40 U	40 U	40 U
40-22-4	Silver		2.5 U	2.5 U	2.5 U	2.5 U	2.5 U	2.5 U	2.5 U
40-28-0	Thallium		7.5 U	7.5 U	7.5 U	7.5 U	7.5 U	7.5 U	7.5 U
40-66-6	Zinc		170	40	120	330	49	43	30 U
57-12-5	Cyanide		10 U	10 U	10 U	10 U	10 U	10 U	10 U
03-95-2	Phenol		50 U	50 U	50 U	50 U	50 U	50 U	50 U
	Total Petroleum Hydrocarbon		1000 U	1000 U	1000 U	1000 U	1100	1000 U	1000 U

UG/L. Micrograms per Liter
U. Not detected at the Method Detection Limit (MDL), value is shown adjacent to U

APPENDIX A

Survey Results, Soil Boring Logs, Well Construction Data

FA 023
6-75

THE PORT AUTHORITY OF NY & NJ
One World Trade Center, New York, N.Y. 10048

FIELD COMPUTATION SHEET

File No. 86 Acc. No. ____ Page No. 12,901
Sheet No. 1 Of 1

Project JFK IA Contract No. A3 992.026 Office JFK - EA
Computer [illegible] Date 12-28-99 Checked By EAA Date ____
Subject Location & Elev. of B.H.'s & M.Wells by Bldg. 204

Reference

Well #	South	East	Ground Elev.	Top of Pipe Elev.
MW204-1	52199	66177	13.81	13.49
MW204-2	52294	66202	13.89	13.55
[illegible]	52234	66353	13.86	13.52
[illegible]	52439	66281	13.92	13.60
MW204-[illegible]	52398	66350	13.97	13.66
BH204-2	52335	66219	13.86	—
[illegible]	52285	66322	13.47	—
[illegible]	52279	66287	13.87	—
BH204-7	52335	66345	13.61	—
BH204-8	52394	66306	13.72	—

547

BH 204-1
MW-1

THE PORT AUTHORITY OF NY & NJ

Engineering Department
Construction Division
Materials Engineering Section

BORING REPORT

BH-204-1/MW-1

SHEET 1 OF 4

PROJECT: JFK - Bldg 204	NAME OF CONTRACTOR: Craig	BORING NO.: ~~MW-204-1~~	SURFACE ELEV.
LOCATION: Laid out as per drawing N.W. corner of site		CONTRACT NO.: 426-99-006	DATE: 12/16/99

SPOON	CASING SIZE	HOLE TYPE
3 O.D. 2 3/8 I.D.	Auger	Monitor

HAMMER	HAMMER
140 # FALL 30 "	# FALL "

DRILLER: S Burns

INSPECTOR: T. Ryan

GROUND WATER LEVEL

Date	Time	Depth	Remarks
12/16/99	PM	9.0'	In S.5

CASING BLOWS/FT.	DEPTH	SPOON BLOWS/6"	RE-COV'D	SAMP. NO.	SAMPLE DESCRIPTION AND REMARKS (LINE LOCATES CHANGE OF PROFILE)
	0				ASPHALT 0.1'
		Hand	Full		GRAVEL 1.0'
		Auger	Rec	1	Fill - Br M-F Sand, tr Silt, tr G.
				2	Same
	5			3	Fill - Br M-F sand, lit G, tr Cobbles.
Augers		10-9		4	Fill - Br M-F sand tr Silt, lit G.
		10-10	13"		
		11-9		5	Same
	10	9-6	16"		
		7-11		6	Fill - Br C-F Sand, tr Silt, tr G.
		14-20	18"		
		16-17		7	Same
		18-21	15"		
	15				Bottom of Boring 14.0'

Note: Samples #1 & 5 were saved for testing. All other samples were screened w/ PID & then discarded.

NOTES: 1 — Length recovered; 0" — Loss of Sample, T — Trap used
2 — U = undisturbed; A = auger; OER = open end rod; V = vane
3 — Log depth of change in color of wash water, loss of water, artesian water, sand heave in casing, etc.

THE PORT AUTHORITY OF N.Y & N.J.

ENGINEERING DEPARTMENT

MATERIALS ENGINEERING DIVISION

PID READINGS

PROJECT: JFK - Bldg 204

BORING No. MU-204-1 | DATE: 12/16/99

FIELD READINGS BY: T Ryan | PID Model: 7

TIME	SAMPLE No.	IN-SITU Split Spoon Reading	HEAD-Space Reading	BREATHING Zone Reading	REMARKS
PM	1		0		
	2		0		
	3		0		
	4		0		
	5		0		
	6		0		
	7		0		

THE PORT AUTHORITY OF N.Y & N.J.

ENGINEERING DEPARTMENT
MATERIALS ENGINEERING DIVISION
CHAIN OF CUSTODY RECORD

Sheet 4 of 4

PROJECT: JFK- Bldg 204

LOCATION: n.w. corner of site | DATE: 12/16/99

BORING No: MW-204-1 | TOTAL No. OF SAMPLES: 2 + FB

SIGNATURE OF ALL PRESENT AT SAMPLING: T. Ryan

RELINQUISHED BY (SIGN) T Ryan	DATE 12/16/99 TIME	RECEIVED BY (SIGN)
RELINQUISHED BY (SIGN)	DATE TIME	RECEIVED BY (SIGN)
RELINQUISHED BY (SIGN)	DATE TIME	RECEIVED BY LAB

REMARKS: 2 samples in 2-16 oz jars & 2-Voa jars + 1 FB in 2 Vials

PA 547
6-90

THE PORT AUTHORITY OF NY & NJ

Engineering Department
Construction Division
Materials Engineering Section

BORING REPORT

SHEET 1 OF 3

PROJECT	NAME OF CONTRACTOR	BORING NO.	SURFACE ELEV.
JFK - Bldg 204	Craig	BH-204-2	
LOCATION: East of Bldg 204		CONTRACT NO.: 426-99-006	DATE: 12/20/99

SPOON	CASING SIZE	HOLE TYPE
3 "O.D. 2 3/8 "I.D.	Augers	1

HAMMER: 140 # FALL 30 "
HAMMER: # FALL "
DRILLER: S. Burns
INSPECTOR: T. Ryan

GROUND WATER LEVEL

Date	Time	Depth	Remarks
12/20/99	AM	9.0'	In S-5

CASING BLOWS/FT.	DEPTH	SPOON BLOWS/6"	RE-COV'D[1]	SAMP.[2] NO.	[3]SAMPLE DESCRIPTION AND REMARKS — LINE LOCATES CHANGE OF PROFILE
Rotary Head	0				Asphalt 0.1'
		Hand Auger	Full Rec	1	Gravel 0.5' Fill - Br M-F Sand, tr Silt, lit. Gr, lit Boulders, tr Coln.
				2	Same
	5			3	Fill - Br M-F Sand, tr Silt, tr Gr.
Augers		24-29		4	Same
		16-19	14"		
		32-41		5	Same
	10	29-26	17"		10.0'
					Bottom of Boring

Note: Samples #1 & 5 were saved for testing. All other samples were screened w/ PID & then discarded

NOTES: 1 — Length recovered; 0" — Loss of Sample, T — Trap used
2 — U = undisturbed; A = auger; OER = open end rod; V = vane
3 — Log depth of change in color of wash water, loss of water, artesian water, sand heave in casing, etc.

THE PORT AUTHORITY OF N.Y & N.J.

ENGINEERING DEPARTMENT
MATERIALS ENGINEERING DIVISION
PID READINGS

Sheet 2 of 3

PROJECT: JFK-Bldg 204

BORING No. BH-204-2 DATE: 12/20/99

FIELD READINGS BY: T. Ryan PID Model: 7

TIME	SAMPLE No.	IN-SITU Split Spoon Reading	HEAD-Space Reading	BREATHING Zone Reading	REMARKS
Am	1.		0		
	2		0		
	3		0		
	4		0		
	5		0		

THE PORT AUTHORITY OF N.Y & N.J.

ENGINEERING DEPARTMENT
MATERIALS ENGINEERING DIVISION
CHAIN OF CUSTODY RECORD

Sheet 3 of 3

PROJECT: JFK-Bldg 204

LOCATION: E. of Bldg 204 | DATE: 12/20/99

BORING No: 204-2 | TOTAL No. OF SAMPLES: 2

SIGNATURE OF ALL PRESENT AT SAMPLING: T. Ryan

RELINQUISHED BY (SIGN) T. Ryan	DATE 12/20/99 TIME	RECEIVED BY (SIGN)
RELINQUISHED BY (SIGN)	DATE TIME	RECEIVED BY (SIGN)
RELINQUISHED (SIGN)	DATE TIME	RECEIVED BY LAB

REMARKS: 2 samples in 2-16 oz jars & 2-voa jars

BH204-3
MW-2

PA 547
6-90

THE PORT AUTHORITY OF NY & NJ

Engineering Department
Construction Division
Materials Engineering Section

BORING REPORT

BH-204-3/MW-2 | SHEET 1 OF 4

PROJECT	NAME OF CONTRACTOR	BORING NO.	SURFACE ELEV.
JFK – Bldg 204	Craig	~~MW-204-2~~	

LOCATION	CONTRACT NO.	DATE
Laid out as per drawing N.E. of Bldg 204	426-99-006	12/20/99

SPOON	CASING SIZE	HOLE TYPE
3 "O.D. 2 3/8 "I.D.	Augers	'A' monitor

HAMMER	HAMMER
140 # FALL 30	# FALL

DRILLER: S. Burn

INSPECTOR: T. Ryan

GROUND WATER LEVEL

Date	Time	Depth	Remarks
12/20/99	AM	9.0'	In S-5

CASING BLOWS/FT.	DEPTH	SPOON BLOWS/6"	RE-COV'D[1]	SAMP.[2] NO.	[3]SAMPLE DESCRIPTION AND REMARKS ___ LINE LOCATES CHANGE OF PROFILE
Cutter head	0				AS/HALT 0.1'
		Hand Auger	Full Rec	1	Fill - Br M-F Sand, lt Gr, tr Silt
				2	Same
	5			3	Same
Augers		3-4		4	Fill - Br M-F Sand, tr Silt, tr Gr.
		4-5	20"		
		9-8		5	Same
	10	9-12	18"		
		9-11		6	Same
		14-17	16"		(2" spoon used)
		10-11		7	Same
		15-19	15"		(2" spoon used) 14.0'
	15				Bottom of Boring

Note: Sample # 1 & 5 was saved for testing. All other samples were screened w/ PID & then discarded.

NOTES. 1 — Length recovered; 0" — Loss of Sample, T — Trap used
2 — U = undisturbed; A = auger; OER = open end rod; V = vane
3 — Log depth of change in color of wash water, loss of water, artesian water, sand heave in casing, etc.

PORT AUTHORITY OF NY & NJ
Engineering Department - Materials Division

Well Installation Report

Sheet 2 of 4

PROJECT: JFK- Bldg 204 N E of Bldg 204				CONTRACT NO.: 426-99-006
LOCATION: Laidout as per drawing N E. of Bldg 204				CONTRACTOR: Craig
WELL NO: 204-2	WELL TYPE: 'A' monitor	INSPECTOR: T. Ryan	DRILLER: S. Burns	DATE: 12/20/99

Well Development Report

(NOTE: WATER LEVEL READINGS FROM TOP OF PVC)

DATE: 12/20/99	WATER LEVEL BEFORE: 9.1'	WATER LEVEL AFTER: 9.1'	TAKEN: 15 MINUTES AFTER

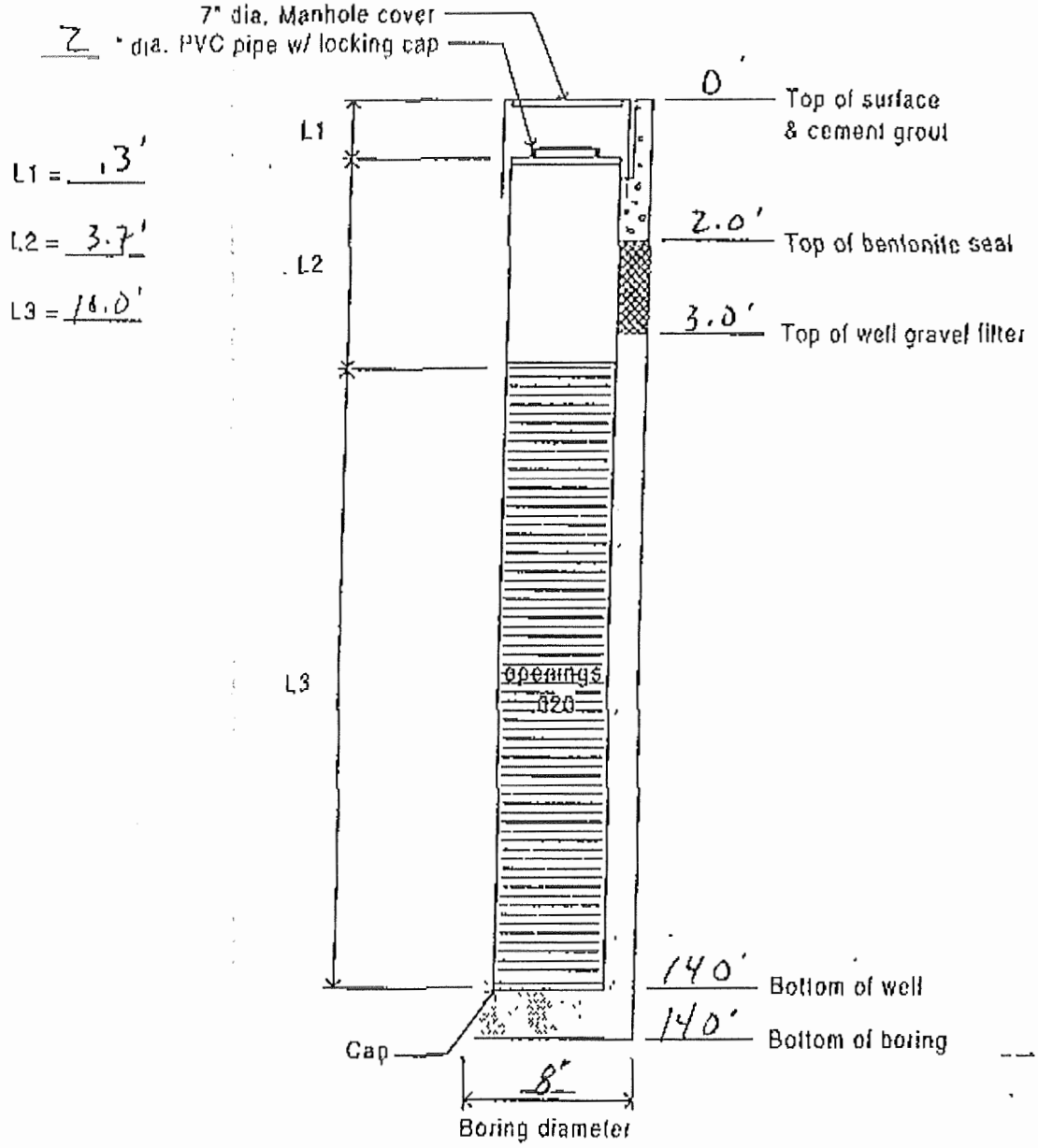

REMARKS:

THE PORT AUTHORITY OF N.Y & N.J.

ENGINEERING DEPARTMENT
MATERIALS ENGINEERING DIVISION
PID READINGS

PROJECT: JFK - Bldg 204

BORING No. MW-204-2 | DATE: 12/20/99

FIELD READINGS BY: T. Ryan | PID Model: 7

TIME	SAMPLE No.	IN-SITU Split Spoon Reading	HEAD-Space Reading	BREATHING Zone Reading	REMARKS
AM	1		0		
	2		0		
	3		0		
	4		0		
	5		0		
	6		0		
	7		0		

THE PORT AUTHORITY OF N.Y & N.J.

ENGINEERING DEPARTMENT
MATERIALS ENGINEERING DIVISION
CHAIN OF CUSTODY RECORD

Sheet 4 of 4

PROJECT: JFK-Bldg 204

LOCATION: Laid out as per drawing N. E. of Bldg 204 | DATE: 12/20/99

BORING No: MW-204-2 | TOTAL No. OF SAMPLES: 2 + 1 FB

SIGNATURE OF ALL PRESENT AT SAMPLING: T. Ryan

RELINQUISHED BY (SIGN) T. Ryan	DATE 12/20/99 TIME	RECEIVED BY (SIGN)
RELINQUISHED BY (SIGN)	DATE TIME	RECEIVED BY (SIGN)
RELINQUISHED BY (SIGN)	DATE TIME	RECEIVED BY LAB

REMARKS: 2 samples in 2-16oz jars & 2-VOA jars + 1 FB in 2 vials

PA 547
6-90

THE PORT AUTHORITY OF NY & NJ

Engineering Department
Construction Division
Materials Engineering Section

BORING REPORT

BH-204-4/MW-3 | SHEET 1 OF 4

PROJECT	NAME OF CONTRACTOR	BORING NO.	SURFACE ELEV.
JFK - Bldg 204	Craig	~~MW-204-3~~	

LOCATION	CONTRACT NO.	DATE
Laid out as per drawing at N.E. corner prop.	426-99-006	12/17/99

SPOON	CASING SIZE	HOLE TYPE
3 O.D. 2 3/8 I.D.	Augers	Ammonitor

HAMMER	HAMMER
140 # FALL 30	# FALL

DRILLER: S Burns

INSPECTOR: T. Ryan

GROUND WATER LEVEL

Date	Time	Depth	Remarks
12/17/99	Am	9.0'	In S. 5

CASING BLOWS/FT.	DEPTH	SPOON BLOWS/6"	RE-COV'D[1]	SAMP.[2] NO.	[3]SAMPLE DESCRIPTION AND REMARKS — LINE LOCATES CHANGE OF PROFILE
cutter head	0				Asphalt 0.1'
					Cement 0.5'
		Hand Auger	Full Rec	1	Fill-Br m-F Sand, tr Silt, tr Gr.
				2	Same
	5			3	Same
Augers		10-19		4	Same
		28-25	18"		
		21-20		5	Same
	10	23-24	17"		
		14-17		6	Same
		21-20	18"		
		5-9		7	Same
		11-13	22"		
	15				14.0' Bottom of Boring

Note: Sample # 1 & 3 were saved for testing. All other samples were screened w/ PID & then discarded.

NOTES: 1 — Length recovered; 0" — Loss of Sample, T — Trap used
2 — U = undisturbed; A = auger; OER = open end rod, V = vane
3 — Log depth of change in color of wash water, loss of water, artesian water, sand heave in casing, etc.

PORT AUTHORITY OF NY & NJ
Engineering Department - Materials Division

Well Installation Report

Sheet 2 of 4

PROJECT				CONTRACT NO.
JFK - Bldg 204				426-99-006
LOCATION				CONTRACTOR
Laid out as per drawing NE corner of site				Craig
WELL NO	WELL TYPE	INSPECTOR	DRILLER	DATE
MW-204-	'A' monitor	T. Ryan	S. Burns	12/17/99

Well Development Report (NOTE: WATER LEVEL READINGS FROM TOP OF PVC)

DATE	WATER LEVEL BEFORE	WATER LEVEL AFTER	TAKEN
12/17/99	9.2'	9.2'	15 MINUTES AFTER

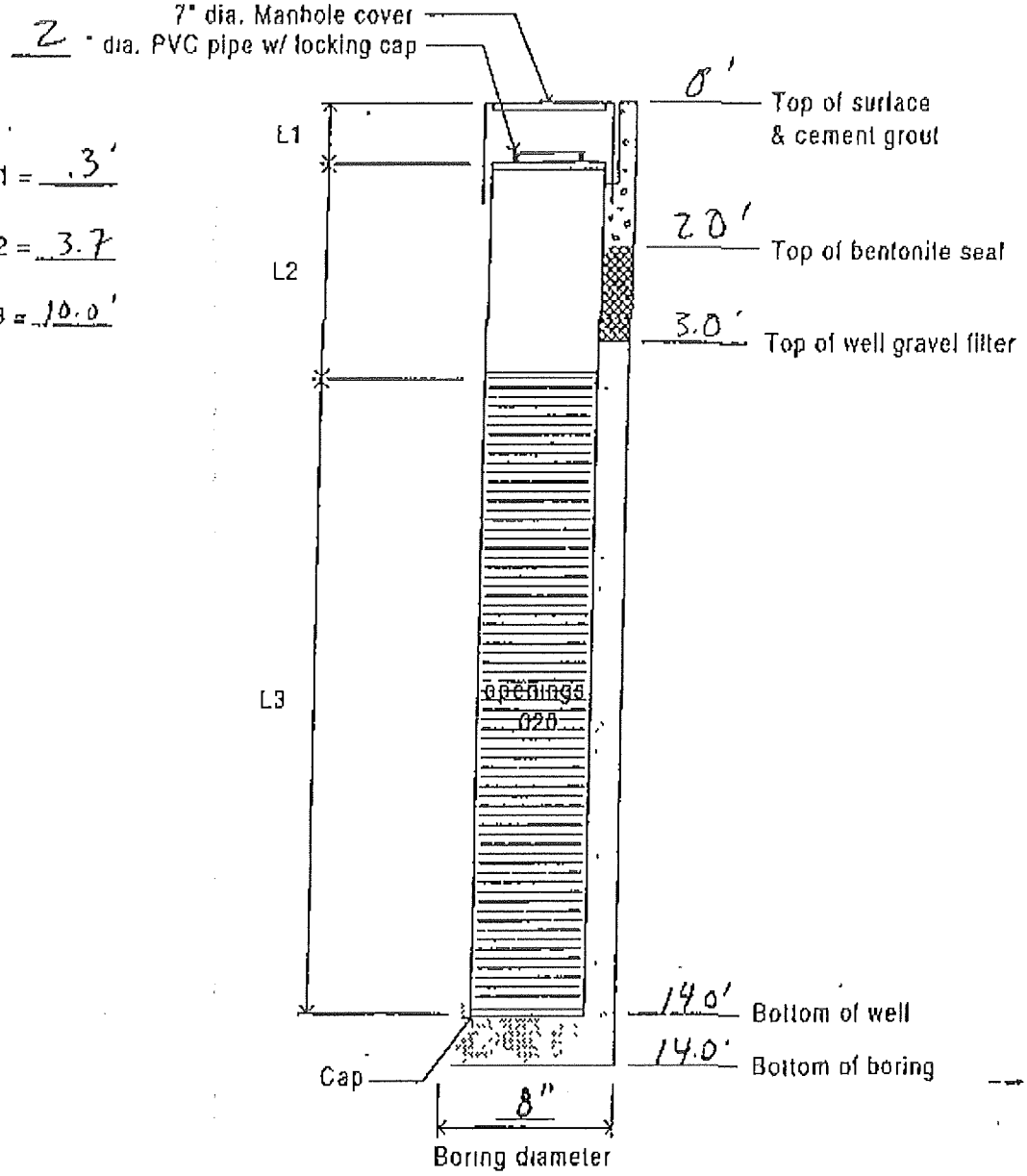

REMARKS:

THE PORT AUTHORITY OF N.Y & N.J.

ENGINEERING DEPARTMENT

MATERIALS ENGINEERING DIVISION

PID READINGS

PROJECT: JFK - Bldg 204

BORING No. MW-204-3 DATE: 12/17/98

FIELD READINGS BY: T Ryan PID Model: 7

TIME	SAMPLE No.	IN-SITU Split Spoon Reading	HEAD-Space Reading	BREATHING Zone Reading	REMARKS
pm	1		0		
	2		0		
	3		0		
	4		0		
	5		0		
	6		0		
	7		0		

THE PORT AUTHORITY OF N.Y & N.J.

ENGINEERING DEPARTMENT
MATERIALS ENGINEERING DIVISION
CHAIN OF CUSTODY RECORD

Sheet 4 of 4

PROJECT: JFK-Bldg 204

LOCATION: As laid out as per drawing N.E. corner Bldg | DATE: 12/17/99

BORING No: MW-204-3 | TOTAL No. OF SAMPLES: 2 + 1 FB + 1 Dup

SIGNATURE OF ALL PRESENT AT SAMPLING: T. Ryan

RELINQUISHED BY (SIGN) T. Ryan	DATE 12/17/99 TIME	RECEIVED BY (SIGN)
RELINQUISHED BY (SIGN)	DATE TIME	RECEIVED BY (SIGN)
RELINQUISHED BY (SIGN)	DATE TIME	RECEIVED BY LAB

REMARKS: 2 samples in 2-16 oz jars & 2-Voa jars + 1-FB in 2 Vials + 1 Dup. Sample in 1-16 oz jar & 1-Voa jar

PA 547
6-90

THE PORT AUTHORITY OF NY & NJ

Engineering Department
Construction Division
Materials Engineering Section

BORING REPORT

SHEET 1 OF 3

PROJECT: JFK-Bldg 204	NAME OF CONTRACTOR: Craig	BORING NO.: BH-204-5	SURFACE ELEV.
LOCATION: N. E. Corner of Bldg 204		CONTRACT NO.: 426-99-006	DATE: 12/21/99

SPOON	CASING SIZE	HOLE TYPE
3 "O.D. 2 3/8 "I.D.	Augers	2
HAMMER: 140 # FALL 30 "	HAMMER # FALL "	

DRILLER: D. Douch

INSPECTOR: T. Ryan

GROUND WATER LEVEL

Date	Time	Depth	Remarks
12/21/99	Am	9.0'	In S 5

CASING BLOWS/FT.	DEPTH	SPOON BLOWS/6"	RE-COV'D[1]	SAMP.[2] NO.	SAMPLE DESCRIPTION AND REMARKS — LINE LOCATES CHANGE OF PROFILE
	0				ASPHALT 0.1' / GRAVEL 0.5'
		Hand auger	Full Rec	1	Fill- Br m-f Sand, lit G., tr Silt, tr Cobbles
				2	Same
	5			3	Same
Auger		6-8			Fill- Br C-f Sand, tr Silt, tr G.
		7-11	18"	4	
		7-9		5	Same
		12-16	20"		
	10				10.0' Bottom of Boring

Note: Samples #1 & 5 were saved for testing. All other samples were screened w/PID & then discarded.

NOTES: 1 — Length recovered; 0" — Loss of Sample, T — Trap used
2 — U = undisturbed; A = auger; OER = open end rod, V = vane
3 — Log depth of change in color of wash water, loss of water, artesian water, sand heave in casing, etc.

THE PORT AUTHORITY OF N.Y & N.J.

ENGINEERING DEPARTMENT

MATERIALS ENGINEERING DIVISION

PID READINGS

Sheet 2 of 3

PROJECT: JFK-Bldg 204

BORING No. 204-5 DATE: 12/21/99

FIELD READINGS BY: T. Ryan PID Model: 7

TIME	SAMPLE No.	IN-SITU Split Spoon Reading	HEAD-Space Reading	BREATHING Zone Reading	REMARKS
AM	1		0		
	2		0		
	3		0		
	4		0		
	5		0		

THE PORT AUTHORITY OF N.Y & N.J.

ENGINEERING DEPARTMENT
MATERIALS ENGINEERING DIVISION
CHAIN OF CUSTODY RECORD

Sheet 3 of 3

PROJECT: JFK - Bldg 204

LOCATION: N E. corner of Bldg 204 | DATE: 12/21/99

BORING No: BH-204-5 | TOTAL No. OF SAMPLES: 2 + FB

SIGNATURE OF ALL PRESENT AT SAMPLING: T. Ryan

RELINQUISHED BY (SIGN) T. Ryan	DATE 12/21/99 TIME	RECEIVED BY (SIGN)
RELINQUISHED BY (SIGN)	DATE TIME	RECEIVED BY (SIGN)
RELINQUISHED BY (SIGN)	DATE TIME	RECEIVED BY LAB

REMARKS: 2 samples in 2-16oz jars & 2-Voa jars + 1FB in 2-Vials

PA 547
5-90

THE PORT AUTHORITY OF NY & NJ

Engineering Department
Construction Division
Materials Engineering Section

BORING REPORT

SHEET 1 OF 3

PROJECT	NAME OF CONTRACTOR	BORING NO.	SURFACE ELEV.
JFK - Bldg 204	Craig	BH-204-6	

LOCATION	CONTRACT NO.	DATE
No. Vent Corner of Bldg 204	426-99-006	12/20/99

SPOON	CASING SIZE	HOLE TYPE
3 "O.D. 2 3/8 "I.D.	Augers	1

HAMMER	HAMMER
140 # FALL 30 "	# FALL "

DRILLER: S Burns

INSPECTOR: T. Ryan

GROUND WATER LEVEL

Date	Time	Depth	Remarks
12/20/99	PM	9 0'	In 5-5

CASING BLOWS/FT.	DEPTH	SPOON BLOWS/6"	RE-COV'D[1]	SAMP.[2] NO.	[3]SAMPLE DESCRIPTION AND REMARKS ___ LINE LOCATES CHANGE OF PROFILE
Water Head	0				ASPHALT 0.2'
		Hand auger	Full Rec	1	Fill - Br M-F Sand, lit G, tr Silt, tr Boulders
				2	Fill - Br M-F Sand, tr Silt, tr G.
	5			3	Same
Augers		6-10	18"	4	Same
		10-15			
		16-18	18"	5	Same
		19-21			
	10				10.0'
					Bottom of Boring

Note: Samples #1 & 5 were saved for testing. All other samples were screened w/ PID & then discarded.

NOTES: 1 — Length recovered; 0" — Loss of Sample, T — Trap used
2 — U = undisturbed; A = auger; OER = open end rod; V = vane
3 — Log depth of change in color of wash water, loss of water, artesian water, sand heave in casing, etc.

THE PORT AUTHORITY OF N.Y & N.J.

ENGINEERING DEPARTMENT

MATERIALS ENGINEERING DIVISION

PID READINGS

Sheet 2 of 3

PROJECT: JFK-Bldg 204

BORING No. BH-204-6 DATE: 12/20/99

FIELD READINGS BY: T. Ryan PID Model: 7

TIME	SAMPLE No.	IN-SITU Split Spoon Reading	HEAD-Space Reading	BREATHING Zone Reading	REMARKS
PM	1		0		
	2		0		
	3		0		
	4		0		
	5		0		

THE PORT AUTHORITY OF N.Y & N.J.

ENGINEERING DEPARTMENT
MATERIALS ENGINEERING DIVISION
CHAIN OF CUSTODY RECORD

Sheet 3 of 3

PROJECT: JFK-Bldg 204

LOCATION: NW corner Bldg 204 | DATE: 12/20/99

BORING No: 204-6 | TOTAL No. OF SAMPLES: 2

SIGNATURE OF ALL PRESENT AT SAMPLING: T. Ryan

RELINQUISHED BY (SIGN)	T. Ryan	DATE 12/20/99 TIME	RECEIVED BY (SIGN)
RELINQUISHED BY (SIGN)		DATE TIME	RECEIVED BY (SIGN)
RELINQUISHED BY (SIGN)		DATE TIME	RECEIVED BY LAB

REMARKS: 2 samples in 2-16 oz jars & 2-voa jars

PA 547
6-90

THE PORT AUTHORITY OF NY & NJ

Engineering Department
Construction Division
Materials Engineering Section

BORING REPORT

SHEET 1 OF 3

PROJECT	NAME OF CONTRACTOR	BORING NO.	SURFACE ELEV.
JFK - Bldg 204	Craig	BH-204-7	
LOCATION: East Side / South End Bld. 204		CONTRACT NO.: 426-99-006	DATE: 12/20/99

SPOON	CASING SIZE	HOLE TYPE
3 "O.D. 2 3/8 "I.D.	Augers	1

HAMMER	HAMMER
140 # FALL 30 "	# FALL "

DRILLER: S. Burns

INSPECTOR: T. Ryan

GROUND WATER LEVEL

Date	Time	Depth	Remarks
12/20/99	PM	90'	In S-5

CASING BLOWS/FT.	DEPTH	SPOON BLOWS/6"	RE-COV'D[1]	SAMP.[2] NO.	[3]SAMPLE DESCRIPTION AND REMARKS — LINE LOCATES CHANGE OF PROFILE
Cutter Head	0	Hand auger	Full Rec	1	Fill - Br M-F Sand, tr Silt, tr Gravel
				2	Same
	5			3	Same
Augers		7-17 24-29	21"	4	Same
		20-27 28-29	18"	5	Same
	10				10.0' Bottom of Boring

Note: Samples #1 & 5 were saved for testing. All other samples were screened w/ PID & then discarded.

NOTES. 1 — Length recovered; 0" — Loss of Sample, T — Trap used
2 — U = undisturbed, A = auger; OER = open end rod; V = vane
3 — Log depth of change in color of wash water, loss of water, artesian water, sand heave in casing, etc.

THE PORT AUTHORITY OF N.Y & N.J.

ENGINEERING DEPARTMENT

MATERIALS ENGINEERING DIVISION

PID READINGS

Sheet 2 of 3

PROJECT: JFK-Bldg 204

BORING No. B4-204-7 DATE: 12/20/94

FIELD READINGS BY: T. Ryan PID Model: 7

TIME	SAMPLE No.	IN-SITU Split Spoon Reading	HEAD-Space Reading	BREATHING Zone Reading	REMARKS
PM	1		0		
	2		0		
	3		0		
	4		0		
	5		0		

THE PORT AUTHORITY OF N.Y & N.J.

ENGINEERING DEPARTMENT
MATERIALS ENGINEERING DIVISION
CHAIN OF CUSTODY RECORD

Sheet 3 of 3

PROJECT: JFK - Bldg 204

LOCATION: East Side / So. End of Bldg 204 | DATE: 12/20/99

BORING No: BH-204-7 | TOTAL No. OF SAMPLES. 2

SIGNATURE OF ALL PRESENT AT SAMPLING: T. Ryan

RELINQUISHED BY (SIGN)	T. Ryan	DATE 12/20/99 TIME	RECEIVED BY (SIGN)
RELINQUISHED BY (SIGN)		DATE TIME	RECEIVED BY (SIGN)
RELINQUISHED BY (SIGN)		DATE TIME	RECEIVED BY LAB

REMARKS: 2 samples in 2-16oz jars & 2-VOA jars

PA 547
6-90

THE PORT AUTHORITY OF NY & NJ

Engineering Department
Construction Division
Materials Engineering Section

BORING REPORT

E - 204 - 8

SHEET 1 OF 3

PROJECT	NAME OF CONTRACTOR	BORING NO.	SURFACE ELEV.
JFK - Bldg 204	Craig	BH-204-8	
LOCATION: So side of Bldg 204		CONTRACT NO.: 426 99-006	DATE: 12/21/99

SPOON	CASING SIZE	HOLE TYPE
3 "O.D. 2 3/8 "I.D.	Augers	1

HAMMER: 140 # FALL 30 "
HAMMER: # FALL "
DRILLER: D. Osuch
INSPECTOR: F. Ryan

GROUND WATER LEVEL

Date	Time	Depth	Remarks
12/21/99	AM	9.0'	In S-5

CASING BLOWS/FT.	DEPTH	SPOON BLOWS/6"	RE-COV'D[1]	SAMP.[2] NO.	SAMPLE DESCRIPTION AND REMARKS — LINE LOCATES CHANGE OF PROFILE
with Head	0				ASPHALT 0.1'
		Hand Auger	Full Rec	1	Fill Br M-F Sand, lit G, tr Silt, tr Cobbles.
				2	Same
	5			3	Same
Augers		8-7			Fill-Br M-F Sand, tr Silt, tr G.
		11-13	19"	4	
		9-12			Same
	10	16-16	24"	5	10.0'
					Bottom of Boring

Note: Sample #1 & 5 were saved for testing. All other samples were screened w/ PID & then discarded

NOTES: 1 — Length recovered; 0" — Loss of Sample, T — Trap used
2 — U = undisturbed; A = auger; OER = open end rod; V = vane
3 — Log depth of change in color of wash water, loss of water, artesian water, sand heave in casing, etc

THE PORT AUTHORITY OF N.Y & N.J.

ENGINEERING DEPARTMENT
MATERIALS ENGINEERING DIVISION
PID READINGS

PROJECT: JFK-Bldg 204
BORING No. BH-204-8 DATE: 12/21/99
FIELD READINGS BY: T. Ryan PID Model: 7

TIME	SAMPLE No.	IN-SITU Split Spoon Reading	HEAD-Space Reading	BREATHING Zone Reading	REMARKS
AM	1		0		
↓	2		0		
	3		0		
	4		0		
	5		0		

THE PORT AUTHORITY OF N.Y & N.J.

ENGINEERING DEPARTMENT
MATERIALS ENGINEERING DIVISION
CHAIN OF CUSTODY RECORD

Sheet 3 of 3

PROJECT: JFK - Bldg 204

LOCATION: So Side of Bldg 204 | DATE: 12/21/99

BORING No: BH-204-8 | TOTAL No. OF SAMPLES: 2

SIGNATURE OF ALL PRESENT AT SAMPLING: T. Ryan

RELINQUISHED BY (SIGN) T Ryan	DATE 12/21/99 TIME	RECEIVED BY (SIGN)
RELINQUISHED BY (SIGN)	DATE TIME	RECEIVED BY (SIGN)
RELINQUISHED BY (SIGN)	DATE TIME	RECEIVED BY LAB

REMARKS: 2 samples in 2-16 oz jars & 2 Voa jars

PA 547
6-90

MW-4
BH-204-9

THE PORT AUTHORITY OF NY & NJ

Engineering Department
Construction Division
Materials Engineering Section

BORING REPORT

BH-204-9/MW-4 | SHEET 1 OF 4

PROJECT	NAME OF CONTRACTOR	BORING NO.	SURFACE ELEV.
JFK-Bldg 204	Craig	~~MW-204-4~~	

LOCATION	CONTRACT NO.	DATE
Laid out as per drawing So West of Bldg 204	426-99-006	12/17/99

SPOON	CASING SIZE	HOLE TYPE
3 "O.D. 2 3/8 "I.D.	Augers	4" monitor

HAMMER	HAMMER
140 # FALL 30	# FALL

DRILLER: S. Burns

INSPECTOR: T. Ryan

GROUND WATER LEVEL

Date	Time	Depth	Remarks
12/17/99	AM	9.0'	In S-5

CASING BLOWS/FT.	DEPTH	SPOON BLOWS/6"	RE-COV'D[1]	SAMP.[2] NO.	[3]SAMPLE DESCRIPTION AND REMARKS LINE LOCATES CHANGE OF PROFILE
	0				ASPHALT 0.1'
					GRAVEL 0.5'
		Hand Auger	Full Rec	1	Fill - Br M-F Sand, tr Silt, tr Gr.
				2	Same
	5			3	Same
Augers		6-11		4	Same
		12-13	15"		
		13-13		5	Same
	10	18-19	16"		
		11-18		6	Same
		23-29	20"		
		21-26		7	Same
		29-32	24"		
	15				14.0' Bottom of Boring

Note: Samples #1 & 5 were saved for testing. All other samples were screened w/ PID & then discarded.

NOTES: 1 — Length recovered; 0" — Loss of Sample, T — Trap used
2 — U = undisturbed; A = auger; OER = open end rod; V = vane
3 — Log depth of change in color of wash water, loss of water, artesian water, sand heave in casing, etc.

PORT AUTHORITY OF NY & NJ

Engineering Department - Materials Division

Well Installation Report

Sheet 2 of 4

PROJECT: JFK - Bldg 204				CONTRACT NO: 426-99-006
LOCATION: Laid out as per drawing S.W. of Bldg 204				CONTRACTOR: Craig
WELL NO: MW-204-4	WELL TYPE: 'A' monitor	INSPECTOR: T Ryan	DRILLER: S. Burns	DATE: 12/17/99

Well Development Report. (NOTE WATER LEVEL READINGS FROM TOP OF PVC)

DATE: 12/17/99	WATER LEVEL BEFORE: 8.7'	WATER LEVEL AFTER: 8.9'	TAKEN: 15' MINUTES AFTER

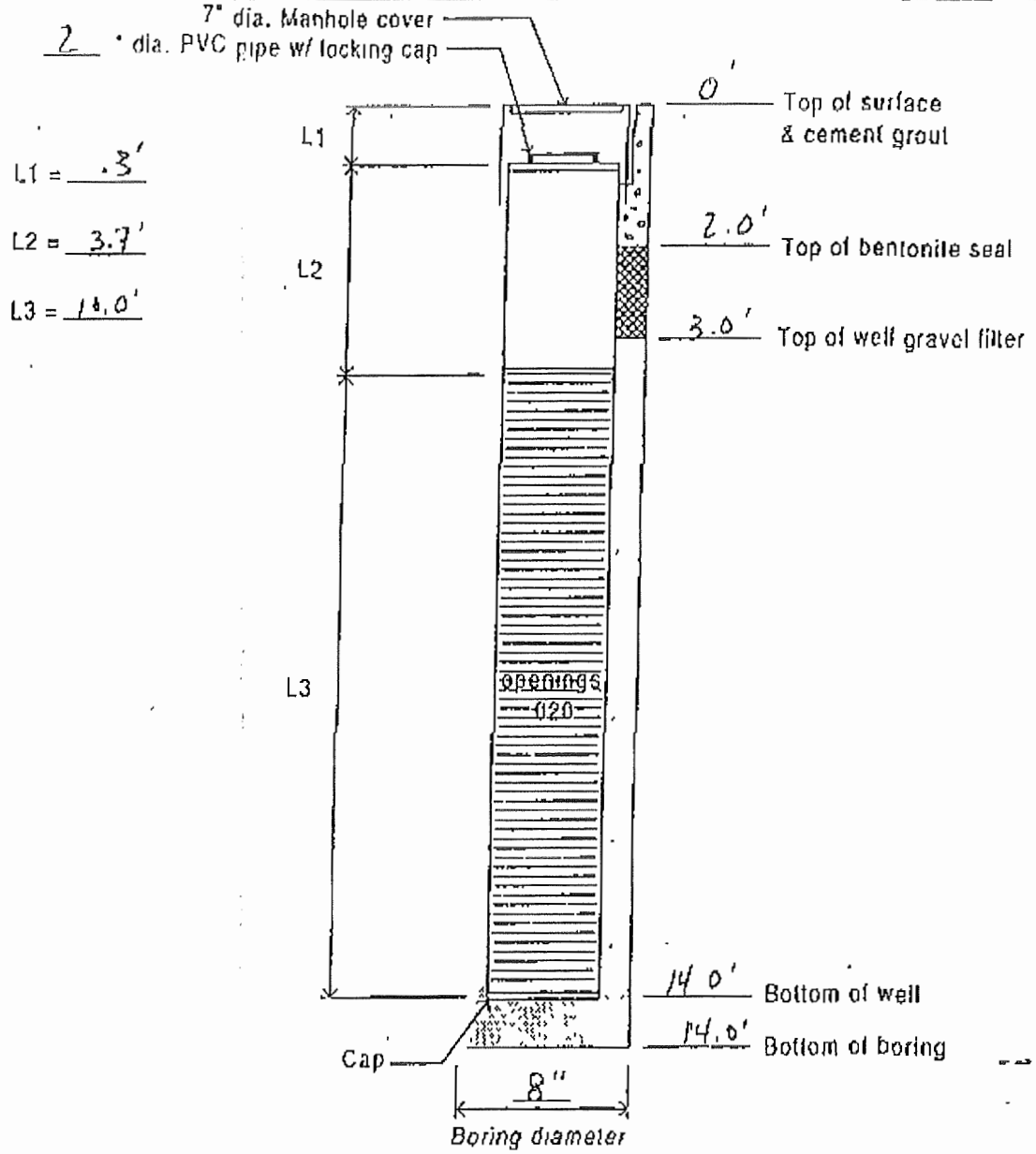

REMARKS.

THE PORT AUTHORITY OF N.Y & N.J.

ENGINEERING DEPARTMENT

MATERIALS ENGINEERING DIVISION

PID READINGS

PROJECT: JFK- Bldg 204

BORING No. MW-204-4 DATE: 12/17/99

FIELD READINGS BY: T Ryan PID Model: 7

TIME	SAMPLE No.	IN-SITU Split Spoon Reading	HEAD-Space Reading	BREATHING Zone Reading	REMARKS
AM	1.		0		
	2		0		
	3		0		
	4		0		
	5		0		
	6		0		
	7.		0		

THE PORT AUTHORITY OF N.Y & N.J.

ENGINEERING DEPARTMENT
MATERIALS ENGINEERING DIVISION
CHAIN OF CUSTODY RECORD

Sheet 4 of 4

PROJECT: JFK - Bldg 204

LOCATION: Laid out as per drawing S.W. of Bldg 204 | DATE: 12/17/99

BORING No: MW-204-4 | TOTAL No. OF SAMPLES: 2

SIGNATURE OF ALL PRESENT AT SAMPLING: T. Ryan

RELINQUISHED BY (SIGN) T Ryan	DATE 12/17/99 TIME	RECEIVED BY (SIGN)
RELINQUISHED BY (SIGN)	DATE TIME	RECEIVED BY (SIGN)
RELINQUISHED BY (SIGN)	DATE TIME	RECEIVED BY LAB

REMARKS: 2 samples in 2-16oz jars & 2-VOA jars

547
-90

THE PORT AUTHORITY OF NY & NJ

Engineering Department
Construction Division
Materials Engineering Section

BORING REPORT

BH-204-10/MW-5 | SHEET 1 OF 4

PROJECT	NAME OF CONTRACTOR	BORING NO.	SURFACE ELEV.
JFK- Bldg 204	Craig	~~MW-204-5~~	
LOCATION: Laid out as per drawing So. of Bldg 204		CONTRACT NO. 426-99-006	DATE 12/17/99

SPOON	CASING SIZE	HOLE TYPE
3 O.D. 2 3/8 I.D.	Augers	4" monitor

HAMMER	HAMMER
140 # FALL 30	# FALL

DRILLER: S. Burns

INSPECTOR: T. Ryan

GROUND WATER LEVEL

Date	Time	Depth	Remarks
12/17/99	Am		In S-5

CASING BLOWS/FT.	DEPTH	SPOON BLOWS/6"	RE-COV'D[1]	SAMP.[2] NO.	[3]SAMPLE DESCRIPTION AND REMARKS — LINE LOCATES CHANGE OF PROFILE
Cutter Head	0				ASPHALT 0.1'
					GRAVEL 0.5'
		Hand Auger	Full Rec.	1	Fill - Br M-F Sand, tr Silt, tr Gr, tr Cobbles.
				2	Same
	5			3	Same
Augers		13-12		4	Fill - Br M-F Sand, tr Silt, tr Gr.
		14-17	14"		
		15-16		5	Same
	10	14-18	16"		
		18-19		6	Same
		20-22	18"		
		17-16		7	Same
		15-21	15"		
	15				14.0' Bottom of Borings

Note: Samples #1 & 5 were saved for testing. All other samples were screened w/ PID & then discarded

NOTES 1 — Length recovered; 0" — Loss of Sample, T — Trap used
2 — U = undisturbed; A = auger; OER = open end rod; V = vane
3 — Log depth of change in color of wash water, loss of water, artesian water, sand heave in casing, etc.

PORT AUTHORITY OF NY & NJ

Engineering Department - Materials Division

Well Installation Report

Sheet 2 of 4

PROJECT: JFK - Bldg 204				CONTRACT NO: 426-99-006
LOCATION: So. of Bldg 204				CONTRACTOR: Craig
WELL NO: MW-204-5	WELL TYPE: Monitor	INSPECTOR: T Ryan	DRILLER: S. Burns	DATE: 12/17/99

Well Development Report

(NOTE: WATER LEVEL READINGS FROM TOP OF PVC)

DATE: 2/17/99	WATER LEVEL BEFORE: 8.8'	WATER LEVEL AFTER: 9.1'	TAKEN: 15 MINUTES AFTER

L1 = .3'

L2 = 3.7'

L3 = 10.0'

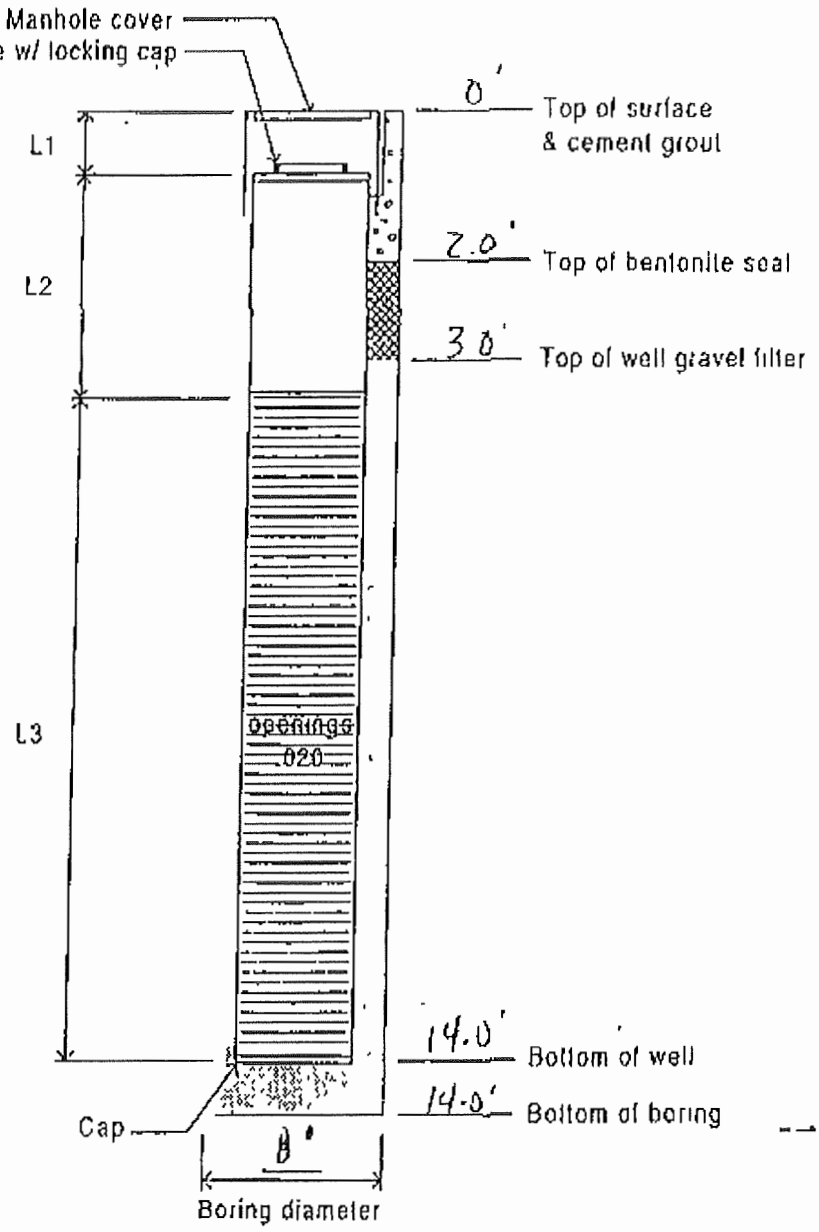

REMARKS:

THE PORT AUTHORITY OF N.Y & N.J.

ENGINEERING DEPARTMENT

MATERIALS ENGINEERING DIVISION

PID READINGS

PROJECT: JFK - Bldg 204

BORING No. MW-204-5 DATE: 12/17/99

FIELD READINGS BY: T. Ryan PID Model: 7

TIME	SAMPLE No.	IN-SITU Split Spoon Reading	HEAD-Space Reading	BREATHING Zone Reading	REMARKS
Am	1		0		
	2		0		
	3		0		
	4		0		
	5		0		
	6		0		
	7		0		

THE PORT AUTHORITY OF N.Y & N.J.

ENGINEERING DEPARTMENT
MATERIALS ENGINEERING DIVISION
CHAIN OF CUSTODY RECORD

Sheet 4 of 4

PROJECT: JFK- Bldg 204

LOCATION: Laid out as per drawing | DATE: 12/17/99

BORING No: MW-204-5 | TOTAL No. OF SAMPLES: 2

SIGNATURE OF ALL PRESENT AT SAMPLING: T. Ryan

RELINQUISHED BY (SIGN) T. Ryan	DATE 12/17/99 TIME	RECEIVED BY (SIGN)
RELINQUISHED BY (SIGN)	DATE TIME	RECEIVED BY (SIGN)
RELINQUISHED (SIGN)	DATE TIME	RECEIVED BY LAB

REMARKS: 2 samples in 2-16 oz jar & 2-VOA jars

APPENDIX B

Well Purging and Field Sampling Results

JFK - Bldg 204 DTP:DTW Results
AO3-992.026

MONITORING PERIOD:				Round 1		Monday, December 27, 1999
Area:		JFK - Building 204				
Time (a.m.)	Location	Depth of Well (ft)	Depth to Product (ft)	Depth to Water (ft)	Difference (ft)	Notes
9:01	MW-204-1	13.71		9.01		
9:14	MW-204-2	13.77		9.08		
9:16	MW-204-3	13.42		9.01		
9:18	MW-204-4	13.77		9.24		
9:21	MW-204-5	13.88		9.28		

ENGINEERING DEPARTMENT
MATERIALS ENGINEERING DIVISION
MONITOR WELL DEVELOPMENT DATA SHEET

PROJECT: JFK BLDG 204 | JOB No.: A03 992 026
WELL LOCATION:
WELLPOINT No.: MW 204-1 | DATE: 12-27-99
STICK-UP DISTANCE: 0.0 feet | CASING DIAMETER: 2 inc
DEPTH OF WELL FROM TOP OF PIPE: 13.71
WELLPOINT DEPTH:

DISTANCE FROM TOP OF PIPE TO:

	TIME	WATER, feet	OIL, feet
BEFORE DEVELOPMENT	11:15AM	9.01	—
AFTER DEVELOPMENT	11:40AM	9.04	—

VOLUME TO BE REMOVED:

DEPTH OF WELL	13.71	feet
DEPTH TO WATER	9.01	feet
DEPTH OF WATER COLUMN	4.70	feet
FACTOR *	x 0.618	liters / feet
VOLUME TO BE REMOVED	2.905	liters

WELL DEVELOPMENT:

NUMBER OF VOLUMES	TIME	pH	TEMP. degrees C	CONDUCTIVITY umohs / cm	SALINITY 0 / 00
1	11:20AM	6.28	15.1°	111	0.1
2	11:24AM	6.21	15.1°	114	0.12
3	11:30AM	6.19	15.2°	117	0.12
4					
5					

SIGNATURES OF ALL PERSONS PRESENT:

R. [illegible]

REMARKS: well sampled @ 11:35AM

* FACTOR = 0.618 FOR 2 INCH DIAMETER WELL CASING
* FACTOR = 2.471 FOR 4 INCH DIAMETER WELL CASING

ENGINEERING DEPARTMENT
MATERIALS ENGINEERING DIVISION
MONITOR WELL DEVELOPMENT DATA SHEET

PROJECT: JFK BLDG 204 JOB No.: A03 992-026
WELL LOCATION:
WELLPOINT No.: MW 204-2 DATE: 12-27-99
STICK-UP DISTANCE: 0.0 feet CASING DIAMETER: 2 inc
DEPTH OF WELL FROM TOP OF PIPE: 13.77

WELLPOINT DEPTH:

	TIME	DISTANCE FROM TOP OF PIPE TO: WATER, feet	OIL, feet
BEFORE DEVELOPMENT	10:40AM	9.08	—
AFTER DEVELOPMENT	11:10AM	8.21	—

VOLUME TO BE REMOVED:

DEPTH OF WELL	13.77	feet
DEPTH TO WATER	9.08	feet
DEPTH OF WATER COLUMN	4.69	feet
FACTOR *	x 0.618	liters / feet
VOLUME TO BE REMOVED	2.898	liters

WELL DEVELOPMENT:

NUMBER OF VOLUMES	TIME	pH	TEMP. degrees C	CONDUCTIVITY umohs / cm	SALINITY 0 / 00
1	10:45Am	6.46	14.8°	221	0.1
2	10:48Am	6.57	14.9°	224	0.1
3	10:51Am	6.59	15.0°	220	0.1
4					
5					

SIGNATURES OF ALL PERSONS PRESENT:
R. [illegible]

REMARKS: Well Started @ 11:05AM

* FACTOR = 0.618 FOR 2 INCH DIAMETER WELL CASING
* FACTOR = 2.471 FOR 4 INCH DIAMETER WELL CASING

ENGINEERING DEPARTMENT
MATERIALS ENGINEERING DIVISION
MONITOR WELL DEVELOPMENT DATA SHEET

PROJECT: JFK BLDG 204 JOB No.: A03 992 026
WELL LOCATION:
WELLPOINT No.: MW 204-3 DATE: 12-27-99
STICK-UP DISTANCE: 0.0 feet CASING DIAMETER: 2 inc
DEPTH OF WELL FROM TOP OF PIPE: 13.42

WELLPOINT DEPTH:

	TIME	DISTANCE FROM TOP OF PIPE TO: WATER, feet	OIL, feet
BEFORE DEVELOPMENT	11:46AM	9.01	—
AFTER DEVELOPMENT	12:05PM	9.01	—

VOLUME TO BE REMOVED:

DEPTH OF WELL	13.42	feet
DEPTH TO WATER	9.01	feet
DEPTH OF WATER COLUMN	4.41	feet
FACTOR *	x 0.618	liters / feet
VOLUME TO BE REMOVED	2.725	liters

WELL DEVELOPMENT:

NUMBER OF VOLUMES	TIME	pH	TEMP. degrees C	CONDUCTIVITY umohs / cm	SALINITY 0/00
1	11:49AM	6.58	14.3°	198	0.10
2	11:55AM	6.62	14.4°	217	0.10
3	12:59AM	6.63	14.5°	320	~~0.10~~ 0.1
4					
5					

SIGNATURES OF ALL PERSONS PRESENT:
R. Hill

REMARKS: Well sampled @ 12:04PM

* FACTOR = 0.618 FOR 2 INCH DIAMETER WELL CASING
* FACTOR = 2.471 FOR 4 INCH DIAMETER WELL CASING

ENGINEERING DEPARTMENT
MATERIALS ENGINEERING DIVISION
MONITOR WELL DEVELOPMENT DATA SHEET

PROJECT: JFK BLDG 204 | JOB No.: A03 192.026
WELL LOCATION:
WELLPOINT No.: MW 204-4 | DATE: 12-27-99
STICK-UP DISTANCE: FLUSH feet | CASING DIAMETER: 2 inc
DEPTH OF WELL FROM TOP OF PIPE: 13.77

WELLPOINT DEPTH:

	TIME	DISTANCE FROM TOP OF PIPE TO: WATER, feet	OIL, feet
BEFORE DEVELOPMENT	9:47AM	9.24	—
AFTER DEVELOPMENT	10:06Am	9.29	

VOLUME TO BE REMOVED:

DEPTH OF WELL	13.77	feet
DEPTH TO WATER	9.24	feet
DEPTH OF WATER COLUMN	4.53	feet
FACTOR *	x 0.618	liters / feet
VOLUME TO BE REMOVED	2.80	liters

WELL DEVELOPMENT:

NUMBER OF VOLUMES	TIME	pH	TEMP. degrees C	CONDUCTIVITY umohs / cm	SALINITY 0 / 00
1	9:50Am	6.43	12.3°C	463	0.1
2	9:53Am	6.52	14.4°C	472	0.1
3	9:58Am	6.53	14.6°C	479	0.1
4					
5					

SIGNATURES OF ALL PERSONS PRESENT:
[illegible]

REMARKS: Well Sampled @ 10:00Am
Duplicate Taken MW-204-D

* FACTOR = 0.618 FOR 2 INCH DIAMETER WELL CASING
* FACTOR = 2.471 FOR 4 INCH DIAMETER WELL CASING

ENGINEERING DEPARTMENT
MATERIALS ENGINEERING DIVISION
MONITOR WELL DEVELOPMENT DATA SHEET

PROJECT: JPK OUOG 204 | JOB No.: A03 992.026
WELL LOCATION: MW 204-5
WELLPOINT No.: | DATE: 12-27-99
STICK-UP DISTANCE: 0.0 feet | CASING DIAMETER: 2 inc
DEPTH OF WELL FROM TOP OF PIPE: 13.88

WELLPOINT DEPTH:

	TIME	DISTANCE FROM TOP OF PIPE TO: WATER, feet	OIL, feet
BEFORE DEVELOPMENT	10:16Am	9.28	—
AFTER DEVELOPMENT	10:35Am	9.42	—

VOLUME TO BE REMOVED:

DEPTH OF WELL	13.88	feet
DEPTH TO WATER	9.28	feet
DEPTH OF WATER COLUMN	4.60	feet
FACTOR *	x 0.618	liters / feet
VOLUME TO BE REMOVED	2.843	liters

WELL DEVELOPMENT:

NUMBER OF VOLUMES	TIME	pH	TEMP. degrees C	CONDUCTIVITY umohs / cm	SALINITY 0 / 00
1	10:22Am	6.71	13.40	498	0.2
2	10:26Am	6.24	14.80	430	0.2
3	10:30Am	6.19	14.7°	460	0.2
4					
5					

SIGNATURES OF ALL PERSONS PRESENT:
R. Hill

REMARKS: well sampled @ 10:33Am

* FACTOR = 0.618 FOR 2 INCH DIAMETER WELL CASING
* FACTOR = 2.471 FOR 4 INCH DIAMETER WELL CASING