Torres Rojas, Genara FOI#14103

From: dwall@connellfoley.com
Sent: Monday, July 01, 2013 11:54 AM
To: Duffy, Daniel
Cc: Torres Rojas, Genara; Van Duyne, Sheree
Subject: Freedom of Information Online Request Form

Information:

First Name: Diane
Last Name: Wall
Company: Connell Foley LLP
Mailing Address 1: 85 Livingston Avenue
Mailing Address 2:
City: Roseland
State: NJ
Zip Code: 07068
Email Address: dwall@connellfoley.com
Phone: 973 535-0500
Required copies of the records: Yes

List of specific record(s):
All Plumbing and Heating Ventiliation and Air Conditioning HVAC Operating and Maintenance OAM Manuals for Newark Airport Terminal B. These manuals would be kept at the Newark Airport Maintenance or Equipment Room for Terminal B.

THE PORT AUTHORITY OF NY & NJ

FOI Administrator

November 25, 2014

Ms. Diane Wall
Connell Foley LLP
85 Livingston Avenue
Roseland, NJ 07068

Re: Freedom of Information Reference No. 14103

Dear Ms. Wall:

This is in response to your July 1, 2013 request, which has been processed under the Port Authority's Freedom of Information Code (the "Code") for copies of all Plumbing and Heating Ventilation and Air Conditioning HVAC Operating and Maintenance OAM Manuals for Newark Airport Terminal B.

Material responsive to your request and available under the Code can be found on the Port Authority's website at http://www.panynj.gov/corporate-information/foi/14103-O.pdf. Paper copies of the available records are available upon request.

Please refer to the above FOI reference number in any future correspondence relating to your request.

Very truly yours,

Daniel D. Duffy
FOI Administrator

225 Park Avenue South, 17th FL
New York, NY 10003
T: 212 435 3642 F: 212 435 7555

J. Moore & Co. MECHANICAL CONTRACTORS

A NEW JERSEY CORPORATION
Established 1961

118 Naylon Avenue, Livingston, N.J. 07039-1006 (973) 992-6970 Fax (973) 992-8860

OWNERS MANUAL

OWNER: Port Authority

PROJECT: EWR-154.081/ B2 Rehab

PM: John Walako

COMPLETED: Phased

J. MOORE JOB #: 5450

TABLE OF CONTENTS

TAB	MANUFACTURER	DESCRIPTION
1	Buffalo Air Handling	AC-11
2	Taco	Hot Water Pumps
3	Trane	AHU-3A/ACCU-3A
4	Trane	AHU-6A & 6B/ACCU-6A & 6B
5	Little Giant	Condensate Pumps
6	Greenheck	Return Fans
7	Mars	Air Curtains
8	Enviro Tech	VAV Boxes
9	Cook	Exhaust & Transfer Fans
10	Sterling	Hot Water Unit Heaters

J.Moore &Co. MECHANICAL CONTRACTORS

11	Ruskin	Fire Dampers
12	ABB	Variable Frequency Drives
13	Carnes	Air Outlets
14	Honeywell	ATC Material
15	Trane	Heating & Ventilating Units

Tag: AC-11

Specification: 15855

Manufacture: Buffalo Air Handling

Drawing reference: M210

Location: B2 Ramp Level

GENERAL NOTE:

① REFER TO M404 FOR ARCHITECTURAL INSTALLATION DETAIL.

KEY NOTES:

① CONNECT TO REHEAT COIL.

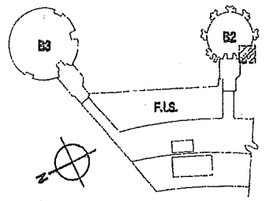

KEY PLAN (RAMP LEVEL)

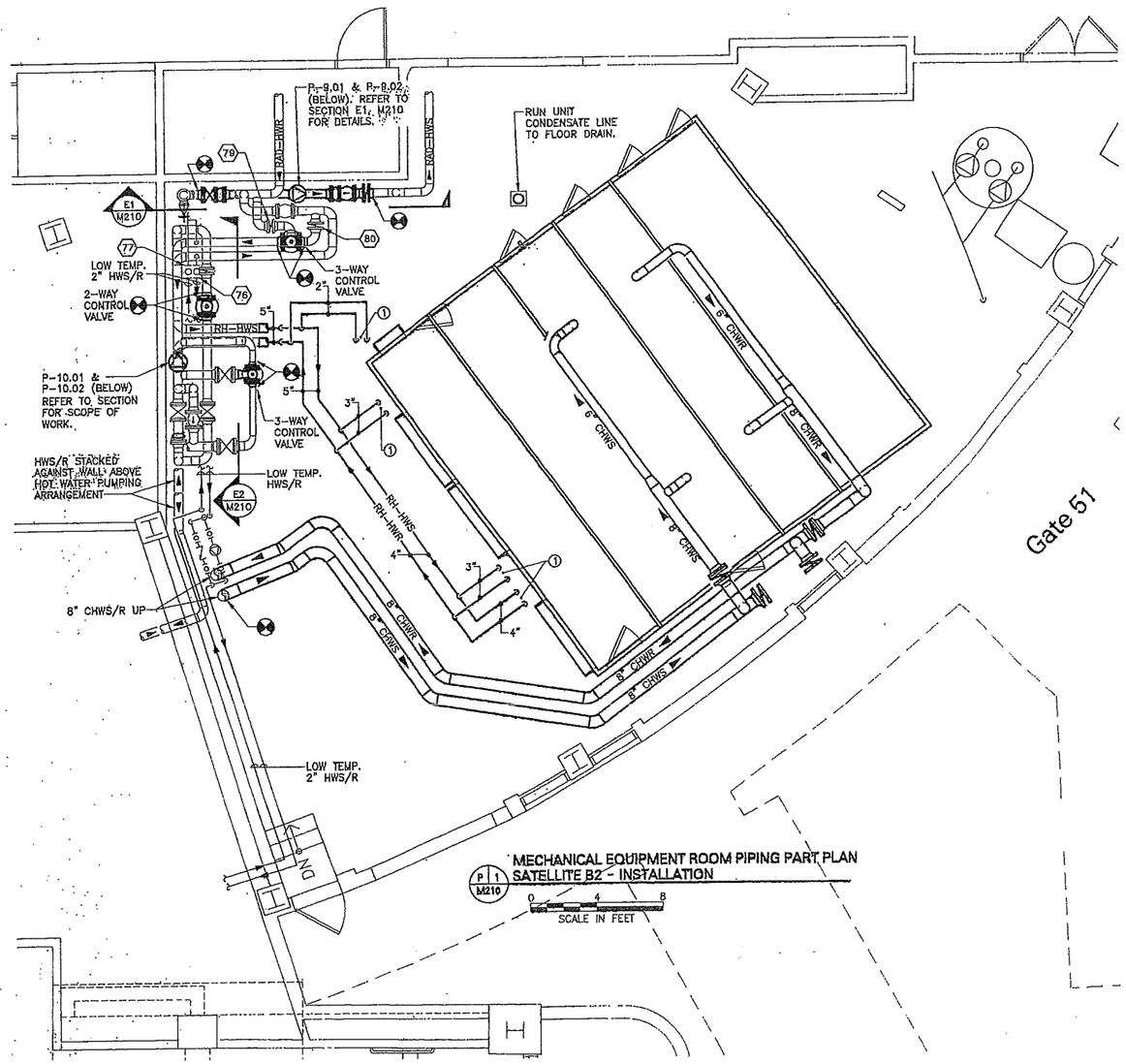

MECHANICAL EQUIPMENT ROOM PIPING PART PLAN SATELLITE B2 - INSTALLATION

P 1 M210

0 4 8

SCALE IN FEET

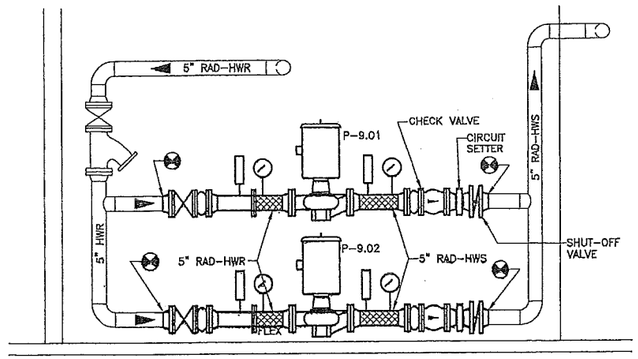

E 1 M210 P-9.01 AND 9.02 ELEVATION

0 2 4

SCALE IN FEET

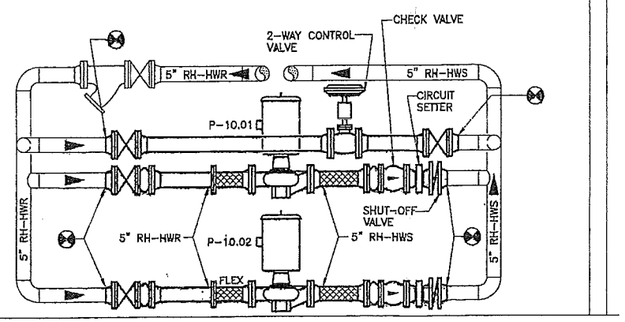

E 2 M210 P-10.01 AND 10.02 ELEVATION

0 2 4

SCALE IN FEET

Sheet 32 of 183

THE PORT AUTHORITY OF NY & NJ

R.G. VANDERWEIL ENGINEERS, LLP

VAL LEVIN
N.J. Professional Engineer # 24GE04679600

No.	Date	Revision	Approved

ENGINEERING DEPARTMENT

NEWARK LIBERTY INTERNATIONAL AIRPORT

MECHANICAL
HVAC
Title

TERMINAL B
REHABILITATION OF SATELLITE B-2
MECHANICAL AND ELECTRICAL SYSTEMS

MECHANICAL EQUIPMENT ROOM PIPING PART PLAN SATELLITE B2 INSTALLATION

This drawing subject to conditions in contract. All provisions, laws, designs and methods herein are reserved to Port Authority and may not be used without its written consent.

All recipients of Contract documents, including bidders and those who do not bid and their prospective subcontractors and suppliers who may receive all or a part of the Contract documents or copies thereof, shall make every effort to ensure the secure and appropriate disposal of the Contract documents to prevent further disclosure of the information contained in the documents. Secure and appropriate disposal includes methods of document destruction such as shredding or arrangements with private handlers that ensure that third persons will not have access to the documents. Contracts other before, during, or after Contract bidding may also be required for disposal services of the Contract documents. Call Ferry, 2 Gateway Center, Newark, NJ 07102 on the origin of the Border of Protection, 114 Fifth Avenue, 7th Floor, New York NY 10011.
It is a violation of law for any person to alter a document in any way, unless acting under the direction of a licensed professional engineer or registered architect. If this document bearing the seal of an engineer/architect is altered, the altering engineer/architect shall affix to the document their seal and the notation 'altered by' followed by their signature and the date of such alteration, and a specific description of the alteration.

J. DUMORNE	J. DUMORNE	S. CSONTOS
Designed by	Drawn by	Checked by

Date 05/12/2010

Contract Number EWR-154.081

Drawing Number M210

PID# 08353000

BUFFALO AIR HANDLING UNIT

UNIT: AC-11

REP: J.A. LOCKWOOD

PHONE: 908-284-1478

BUFFALO
AIR HANDLING

BUFFALO AIR HANDLING UNIT SERVICE MANUAL

WARNING

IMPROPERLY INSTALLED OR OPERATED EQUIPMENT CAN BE DANGEROUS AND MAY CAUSE INJURY. IT IS YOUR RESPONSIBILITY TO FAMILIARIZE YOURSELF WITH THE CONTENTS OF THIS MANUAL AS WELL AS OTHER WRITTEN MATERIAL SHIPPED WITH THIS FAN BEFORE IT IS OPERATED. KEEP UNAUTHORIZED PERSONNEL AWAY FROM THE FAN.

INDEX

1.0	Introduction	1
2.0	Representative/Equipment Information	2
3.0	Shipping & Receiving	4
4.0	Handling	4
5.0	Storage	4
6.0	Foundations	4
7.0	Installation and Assembly	5
8.0	Safety and Operation	8
9.0	Motors	9
10.0	V-Belt Drives	10
11.0	Bearings	10
12.0	Coils	12
13.0	Filters and Dampers	13
14.0	Preventative Maintenance & Lubrication	13
15.0	Ordering Spare Parts	15
16.0	Warranty	16
17.0	Cleanliness	16

1.0 INTRODUCTION

This manual provides information necessary to install, operate, and service Buffalo Air Handling units. Maintenance guidelines and procedures are set so that your equipment will continue to efficiently and safely operate with minimum repair or replacement.

An assembly drawing containing all pertinent data and dimensions for your particular equipment has been supplied with your order.

You may find it helpful to have the catalog pertaining to your particular air handling unit. These may be obtained through your nearest Buffalo sales representative or by writing directly to the factory.

- ***IT IS STRONGLY ADVISED THAT AN EXPERIENCED ERECTOR SUPERVISE THE INSTALLATION OF THE EQUIPMENT.***

Servicemen are available by arrangement through any Buffalo sales representative. Products must be used in accordance with the information specified in this manual and cabinet assembly drawings.

Regular inspections must be made to warrant safe equipment operation. Strict compliance with all safety and maintenance procedures are the responsibility of the user and are necessary for safe and efficient operation. Failure to follow these installation operating and maintenance procedures can result in accidents endangering personnel or equipment.

START-UP PROCEDURES
BUFFALO AIR HANDLING UNITS
PRE-START UP CHECKLIST AND SERVICE REQUEST

Use this form to check for proper installation of Buffalo Air Handling units. If prepaid start-up service was ordered as part of the Air Handling order, return this completed form to your local Buffalo Air Handling Sales Representative to schedule start-up. If start-up service was not ordered, but is desired, contact your local Buffalo Air Handling Sales Representative for a quotation and then return this completed form with purchase order to schedule the start-up. Please allow 3 – 4 weeks for start-up service.

Job Name _____ Installing Contractor _____

Street _____ Contractor Contact _____

City _____ Phone _____

PRE-START UP CHECKLIST

Before attempting to start-up the Air Handling Unit, confirm that the following actions have been completed (or will be completed prior to scheduled start-up). Refer to Buffalo Air Handling Service Manual G-875-G.

		YES	NO
1.	Unit installed on Support structure, leveled and shimmed.	☐	☐
2.	Proper assembly of unit and proper sealing of all shipping splits (welded or bolted)	☐	☐
3.	If units supplied with inertia bases, has concrete been poured in base?	☐	☐
4.	Release all shipping hold down devices.	☐	☐
5.	Has ductwork been installed so fan can be run?	☐	☐
6.	Check for proper clearance of all rotating components and adjust as required.	☐	☐
7.	Check bearings for proper lubrication, cleanliness, moisture, alignment locking and clearances.	☐	☐
8.	Align all drive components.	☐	☐
9.	Check motor rotation.	☐	☐
10.	Has power been brought to unit (fan, lights, etc.)?	☐	☐
11.	Have filters been installed in units.	☐	☐
12.	Are the VIV's and damper operators operational?	☐	☐
13.	Have VFD's been started, checked and parameters set. Air balance and control done?	☐	☐
14.	Has unit been cleaned out including coils and drain pans?	☐	☐

Note: In the event service is purchased from Buffalo Air Handling, customer can disregard items 6, 7, and 8. These will be done by Buffalo Air Handling service technician.

REQUEST FOR SERVICE TECHNICIAN

I acknowledge that all of the above items have been completed. I understand that if upon job inspection these requirements are not met, no start-up work will be performed and travel time and expenses will be charged at current hourly rates.

Name: _____ Company _____ Date _____

3. Vibration Isolation - Rubber in shear or spring isolators (See Figure 2) may be provided to separate the vibration of rotating elements from the structure. Isolators for ceiling mounted units should be located between hanger rods and the air handling unit. Floor/platform mounted units may have internal (fan mounted on isolators in the unit) or external (below unit base) vibration isolators. When external vibration isolation is used, sheet metal, piping, and electrical flexible connectors must be installed by the installer. Internally isolated fans are secured for shipment with tie down bolts and shims.

● ***SHIPPING TIE DOWN BOLTS AND SHIMS MUST BE REMOVED BEFORE START-UP.***

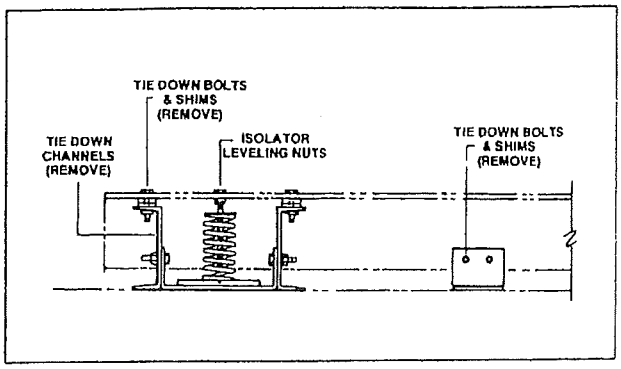

Figure 2. Tie-Down Bolts and Shims. (typical)

7.0 INSTALLATION

7.1 GENERAL

All air handling units are assembled with a test run at the factory. Units are shipped in either full, modular, or knocked down (special order) assemblies. Adjoining parts are numbered or lettered for easy field assembly. Gaskets, caulking, or sealers are furnished for use at the field assembly of joints. Omission of gasketing will cause leakage and improper alignment of the cabinet.

7.2 UNIT ASSEMBLY

Figure 3 on the following page illustrates a typical double-wall cabinet construction with a shipping split. The following assembly procedure is recommended:

1. Before removing shipping protection, complete unit should be moved into its proper location.
2. Blower section's motor and drive, if not factory mounted, should be mounted in place. Final alignment and adjustment of drive will be required before start-up. (Refer to Sections 10.0 and 11.0).
3. Coil Sections should be handled with care to prevent damage to the finned surface and piping connection. Internally piped units may have pipe supports that require removal prior to its installation.
4. Accessory sections, such as filter, damper, access, and humidifier sections may require field joining.

7.3 FAN ALIGNMENT

Fan has been aligned and balanced, at the factory.

● ***ALIGNMENT MUST BE CHECKED BECAUSE SHIPPING CAN ALTER FACTORY ALIGNMENT.***

To check alignment after shipment, spin wheel slowly by hand to see if fan wheel clears the fan inlets. It may be necessary to loosen wheel hub set screws and shift the wheel on the shaft to locate the wheel properly with the inlets. In most cases, the lip of the inlet bell or inlet cone should be even with or slightly extended into the wheel inlet. Generally, wheel-inlet bells are fitted for 70°F air as shown in Figure 4. However, consult with your Buffalo sales representative for proper lip alignment. (Refer to Section 8.1).

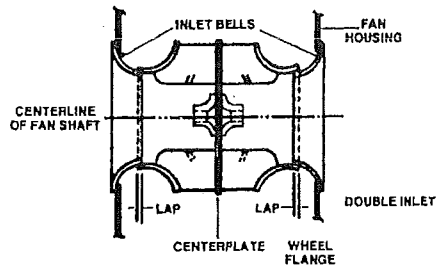

WHEEL FLANGES SHOULD OVERLAP EACH INLET BELL EQUALLY

NOTE: Refer to unit white print for wheel diameter.	
Wheel Diameter	**Lap (Inches)**
12¼-27"	⅛
30"	9/32
33-44½"	⅜
49-54½"	¼
60-66"	⅜

Figure 4. General Wheel-Inlet Bell Fits. (typical)

7.4 WATER COILS

Connection of the water coils to the unit system is by others. Refer to the unit drawing and instructions on the cabinet for correct orientation of the external piping.

7.5 DIRECT EXPANSION COILS

Connection of the direct expansion coils to the unit system is by others. Refer to the unit drawing and the instruction on the cabinet for correct orientation of the external piping.

Direct expansion coils require an expansion valve to be provided by others. Coil distributor has a factory sized orifice mounted on the coil.

7.6 STEAM COILS

Connection of steam coils to the steam system is by others. Refer to ASHRAE Fundamentals Guide for piping procedures. These general precautions are:

1. Make the supply pipe size and return pipe size the same as the coil connections.
2. Condensate should not be raised above coil return into overhead main or drain into mains under pressure except in step 3.
3. A pump and receiver or boiler return trap should be installed between coil condensate traps and overhead & return mains under pressure.
4. Provide all coils with proper air vents to eliminate non-condensate gases.
5. Steam piping should not be supported from steam coil. Both mains and coil should be supported separately.
6. Be sure piping is pitched to facilitate drainage of the coil.

7.7 ELECTRIC HEATING COILS

Electric coils are specifically designed to heat the air per customers specifications.

1. Full air flow over the electric coil must be continuously maintained without blockage of any part of the heating elements.
2. Do not operate below the design velocity.
3. The coil must be electrically interlocked with the fan to ensure that the fan is operating before the coil is energized.
4. For safe operation, make sure that no condensate or spray water is carried onto the electric coil.
5. The electric coil is installed similarly to the steam coil except for the extension of the terminal box from the unit side. Slide the electric coil into the unit so that the back of the terminal box is in contact with the unit side as shown in Figure 5. Attach the back of the terminal box to the unit side with sheet metal screws. Consult the unit drawings for details.

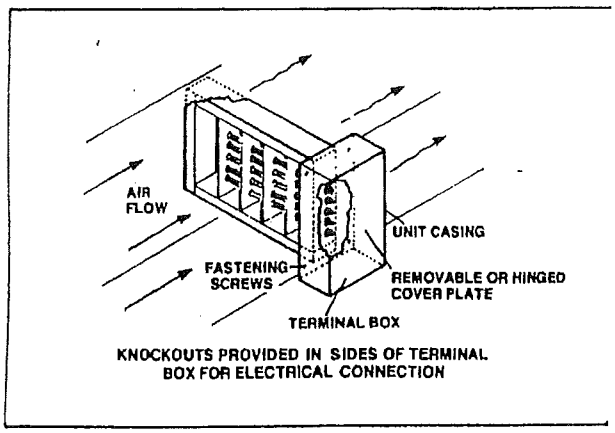

Figure 5. Electric Coil Installation.

7.8 CONDENSATE DRAIN CONNECTION AT PANS

External piping, including a trap for condensate, is required and furnished by others. To insure proper operation of an air handling cabinet and prevent property damage to a building, condensation from cooling coils must be collected in a drain pan and then carried away through the drain line. Improper sizing, trapping, or pitch are common causes of property damage. Refer to Figure 6 and 7 for correct drainage of condensate water.

Unit may require elevation on house keeping pad, roof curb, or structural steel.

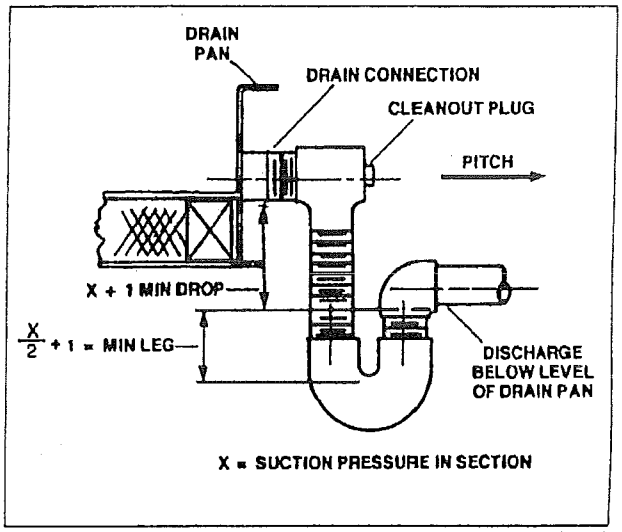

Figure 6. Condensate Drainage (negative internal SP) for Draw-Through Unit.

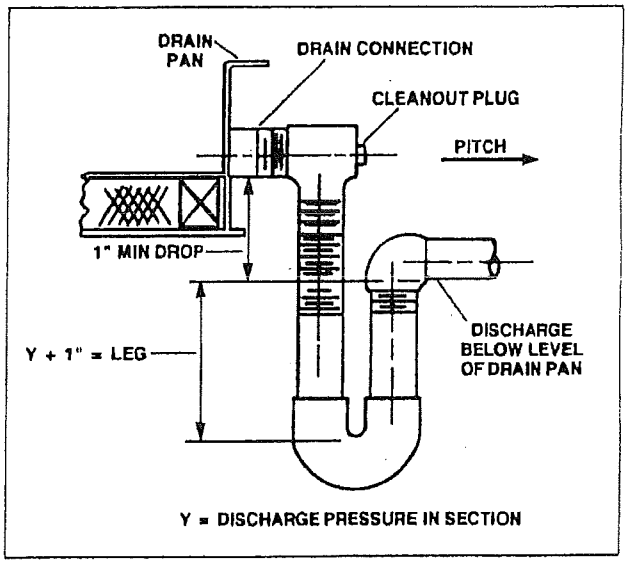

Figure 7. Condensate Drainage (positive internal SP) for Blow-Through Unit.

7.9 DAMPERS

Dampers are factory mounted and shipped as an integral part of the air handling unit. Damper motors are normally furnished by the temperature control contractor. However, in some cases, the damper motor may be supplied by the manufacturer.

Operate the control lever to ensure that the vanes move easily from open to closed positions. VIVs operated manually have a wing nut which locks the control lever in position on the quadrant. Automatic operation is accomplished by connecting a suitable control device to the VIV control lever.

On some fans, in order to limit the horsepower, a stop is used to control the maximum open position.
Do not remove this stop. Figure 8 illustrates a typical VIV. VIV's are serviced by removing the entire assembly.

8.4 ADJUSTABLE MOTOR BASE

Adjustable motor base facilitates tension adjustment of V-belt drive. Tension in V-belt drive should be checked before operation and periodically after initial operation.

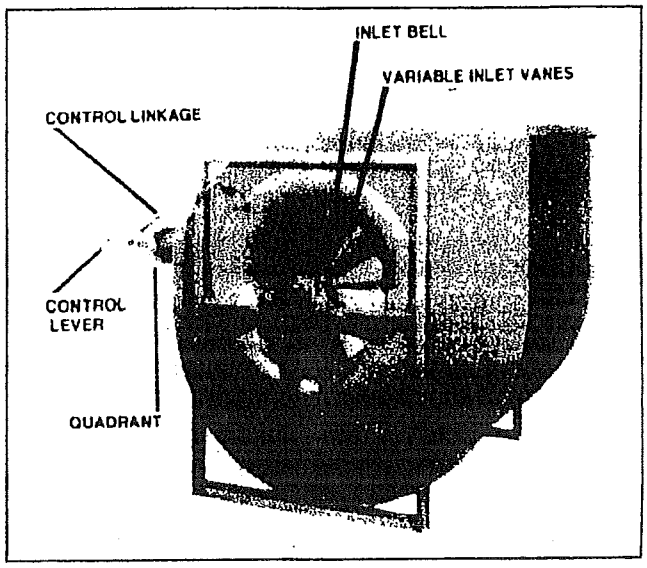

Figure 8. VIV Assembly.

9.0 MOTORS

After the motor has been mounted, aligned, and bolted down, wire to power supply through a disconnect switch, short circuit protection, and suitable magnetic starter with overload protection. All motors should be connected as shown on nameplate. Install all wiring and fusing in accordance with the National Electric Code and local requirements. Ensure that the power supply (voltage, frequency, and current carrying capacity of wires) is in accordance with the motor nameplate. Motors are received with bearings lubricated and require infrequent lubrication. Refer to the motor manufacturer, for lubrication.

9.1 TO REVERSE DIRECTION OF ROTATION

9.1.1 Single Phase Motors

Capacitor motors are reversed in rotation by interchanging connections to supply either the main or auxiliary winding.

9.1.2 Three Phase Motors

For three phase motors, interchange any two line leads. Normal operation of motors results in temperature rises according to motor insulation. The total motor operating temperature includes ambient temperature plus motor rise. The motor rise includes nameplate temperature rise, service factor allowance, and hot-spot allowance. The motor nameplate indicates the insulation class. The following is the maximum total operating temperature for each insulation class:

Insulation Class	°Fahrenheit	°Centigrade
A	221	105
B	266	130
F	311	155
H	356	180

9.2 MOTOR TROUBLESHOOTING

Various motor troubles can be caused by:

1. Low or high voltage.
2. Overload - high temperature - high amperage.
3. Armature unbalance - vibration and noise.
4. Worn bearings - armature rubs against stator.
5. Too much or not enough lubricant in bearings.
6. Commutator brushes on d-c motor worn or not seated under proper tension.
7. Loose hold down bolts - vibration and noise.
8. Dirt in windings - high temperature.
9. Low insulation resistance due to moisture - check resistance with megohm meter ("Megger") or similar instrument employing a 500 volt d-c potential. Resistance should read at least 1 megohm. If it is less, remove motor from service and send to a qualified motor repair shop.

11.3 GREASING PROCEDURE

Be careful to prevent any dirt from entering the bearing. Use a low-pressure gun. Fill the lower half housing with 1/3 to 1/2 full as well as packing the ring assembly housing the bearings with grease. Note that an excess amount of grease can cause bearings to overheat.

11.4 FREQUENCY OF RE-LUBRICATION

How often to re-lubricate can only be determined from your operating conditions. Determine the proper re-lubricant interval for your unit by setting up a schedule and visually examining the purged lubricant. If the lubricant is clean, lengthen the period between re-lubrications; if it is contaminated, shorten the interval. Refer to Table 2 for the recommended re-lubrication intervals.

Table 2. Bearing Re-lubrication Intervals.

Operating Condition		Operating Temperature	Grease Intervals
Dirt	Moisture	Degrees Fahrenheit	
Fairly Clean	None	35 to 120	6 to 12 Months
		120 to 160	1 to 12 Months
		160 to 200	1 to 4 Weeks
Moderate to Extremely Dirty	None	32 to 160	1 to 4 Weeks
		160 to 200	1 Week
Fairly Clean	Heavy Moisture & Direct Water Splash	32 to 200	1 Week

11.5 BEARING REPLACEMENT

1. Bearings should be inspected and thoroughly cleaned if necessary. If the bearing is disassembled, mark each part in relation to one another to avoid any error in re-assembly.
2. Note type of pillow block and location of the bearing.
3. Mount bearings in position on the shaft in accordance with the particular type of bearing furnished.
4. The shaft should be clean and free from burrs and other irregularities. Be sure bearing is not seated on worn flat sections.

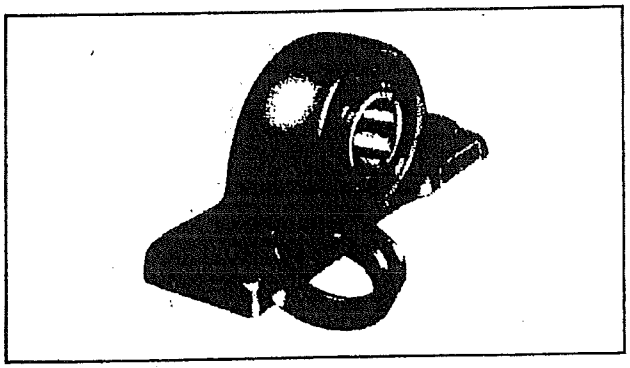

Figure 10. Ball Bearing.

11.5.1 Ball Bearing (See Figure 10)

1. This type of bearing is shipped assembled and ready for installation.
2. Slip each bearing pillow block and locking collar into position on the shaft.
3. Bolt pillow blocks in position on their mounting surfaces after shimming and aligning. They should be mounted so the fan wheel and shaft clear the fan housing.
4. Slide locking collar against end of inner ring. Turn collar in the direction of the shaft rotation until it grips the shaft and inner ring. Tighten the collar with a drift pin. Tighten all set screws or screws in collar.
5. To dismantle, reverse this procedure. Be sure to remove burr on shaft caused by set screw before removing pillow block from shaft. A honing stone will remove burr.

11.5.2 Spherical Roller Bearing (See Figure 11)

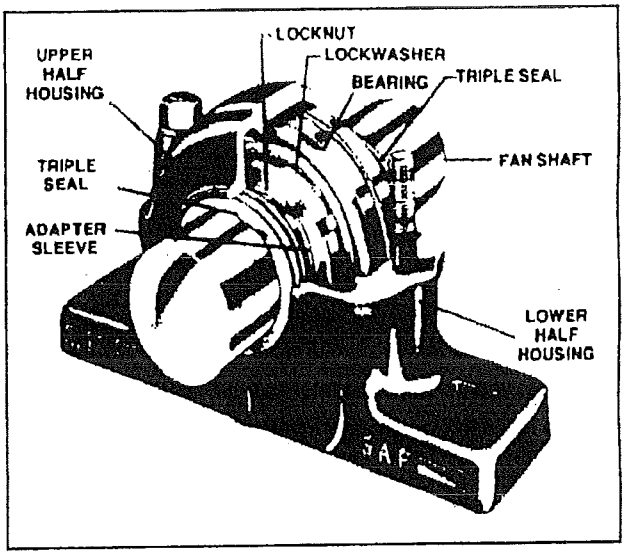

Figure 11. Spherical Roller Bearing.

The replacement of this type of bearing must be carefully installed per SKF procedures in order to obtain the correct bearing tolerances for proper operation. Contact your local Buffalo sales representative for this information.

11.6 Storage of Assembled Bearings

Equipment which is idle must be set in motion periodically in order to spread the lubricant over all bearing surfaces. Suitable intervals depend on ambient conditions. For storage of assembled bearings, they should be cleaned and packed full with petroleum or other suitable anti-rust agents.

● ***STORAGE GREASE MUST BE REMOVED THOROUGHLY AND THE PROPER AMOUNT OF A SUITABLE LUBRICANT APPLIED BEFORE OPERATION*** (Refer to Section 11.3).

3. Connect the blower to the coil supply or return header at a point where there will be no reduction in pipe size for the blower to the coil. In Figure 13, the blower is shown connected to the return header. Figure 14 shows the blower connected to the supply headers. Do not attempt to blow the coil by connecting the blower to the air vent.
4. Close all outlets on the header to which the blower is connected and remove the plug from the other header.
5. Operate the blower for one-half hour and then check coil for dryness.
6. Jar the coil slightly during the blowing operation. This will free any water which may be trapped and may also dislodge the dirt or scale which is trapping the water. Do not damage the coil in this process.
7. Allow the coil to stand for a few minutes after it is blown down to give the moisture that adhered to the walls of the tube a chance to accumulate. Blow it down again, and if any water comes out, repeat the blowing operation.
8. Leave all drains open.

12.3.3 Equipment Required to Flush Coils with Antifreeze

The required portable equipment consists of a one-inch centrifugal pump operating at a speed of approximately 3500 rpm and having a capacity of 25 gpm at a 35 ft. head.

There are several antifreeze solutions that can be used, the best of which are relatively expensive. Alcohol must not be used due to fumes and the hazard of fire.

12.3.4 Ethylene Glycol Coils

The use of an antifreeze/water solution as the circulating coolant should be incorporated at the equipment design phase. Coil performance is modified by the use of such a solution. The level of freeze protection is the responsibility of the system design engineer.

13.0 FILTERS AND DAMPERS

13.1 FILTERS

Replace or clean panel, cube, cartridge, or roll-type filters periodically as prescribed by the manufacturer.

13.2 DAMPERS

1. Dampers must be kept free of dirt or other foreign matter that may impede normal free movement. Linkage pivot points should be lubricated regularly. Axles rotate in sleeve bearings, which should not require any lubrication. It is recommended that all linkage joints be inspected periodically to insure tightness of set screws.
2. On multi-zone units, periodic checks should be made of bearings and axles to insure proper operation. Do not overlook the center bearings and axles (Refer to Figure 15).

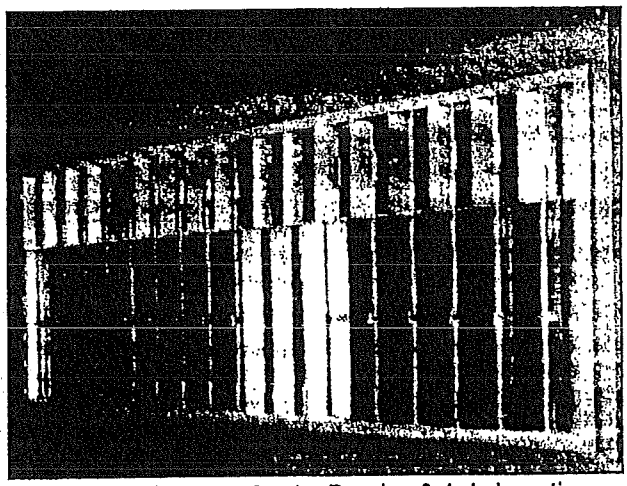

Figure 15. Damper Center Bearing & Axle Locations.

14.0 PREVENTATIVE MAINTENANCE AND LUBRICATION

14.1 GENERAL

Maintenance instructions will accompany the shipment of each air handling unit. All instructions and unit drawing should be kept for future reference. The following items are recommended to help maintain proper operation of the air handling unit:

1. A definite time schedule for inspecting all rotating parts should be established. The frequency of inspection depends on the severity of operation and the location of the equipment.
2. Fan bearing alignment should be checked at regular intervals. Misalignment can cause overheating, bearing failure and unbalance.

Units designed for wheel removal have been provided with adequate access. Other units require field modification.

Wheel should then be removed from the shaft. Ensure that all set screws are backed off before attempting to remove the wheel.

14.5 INSTALLATION OF NEW FAN WHEEL & SHAFT

New wheel and shaft are received disassembled. Follow these steps to install in the fan housing.

1. Remove the protective coating on shaft.
2. Remove keys from the shaft.
3. Carefully clean the inside of the wheel hub with solvent and lubricate bore for ease of shaft entrance.
4. Be sure that the set screws in the wheel hub are turned out to prevent possible scratching of the shaft. If three set screw holes appear in the hub, use only two - one over the key and the other leading key in direction of rotation.
5. Wheel and shaft are now ready for installation into the fan housing.
   a. Wheel should be placed into the fan housing, making sure the rotation arrow on the wheel agrees with the rotation arrow on the fan housing.
   b. After the wheel has been placed in the housing, they are blocked so that the wheel is centered in the fan inlet, with relation to the shaft center line.
   c. Slide the shaft into the wheel and tap key into the key way. Tighten the set screw over the key with only enough pressure to hold the wheel in position while placing the remaining parts in position.
   d. Slide the inlet bell/VIV into position and bolt to the housing.
   e. Mount the bearing supports in fan inlet.
   f. Mount the bearings on their supports, align the wheel with the inlet bell/VIV, align the bearings, shim pillow blocks where necessary, and tighten the nuts on all bolts.
   g. Tighten the set screws in the wheel hub over the key after final alignment. Then, tighten the set screw leading key in direction of air flow.
   h. If the fan has VIVs, assemble the main control shaft and mechanism per assembly drawing. Check its operating movement.
   i. Field balance **must** be anticipated any time a fan is disassembled for maintenance.

14.6 FAN BALANCING

Fan wheels are statically and dynamically balanced by the factory. The final balance of the fan is dependent on its installation and foundation.

Shut down the fan before personnel enters the air handling unit to place vibration pickups in place.

WARNING: Operation of any fan above alarm levels for a prolonged period of time or operation above shut down for **any** period of time, may cause equipment failure and extensive damage, as well as endangerment to personnel.

Refer to AMCA Standard 204-96, table 6.4, for guidance.

15.0 ORDERING SPARE PARTS

Contact your local Buffalo sales representative and supply the following information:

1. Shop order number stamped on the unit nameplate.
2. Size and type of unit, also stamped on nameplate.
3. Fan arrangement.
4. Description of the part required.
5. Special paints, coatings, or materials.

A bill of materials on the assembly drawing and a set of data sheets on your air handling unit was supplied before the unit was delivered. This information will be helpful when ordering spares.

RECOMMENDED SPARES

1. V-belts
2. Bearings
3. Filters

BEARINGS

1. State whether ball or roller
2. Manufacturer
3. Size and number
4. Fixed or floating
5. Parts required

BUFFALO
AIR HANDLING

RECOMMENDED SPARE PARTS LIST

J Moore & Co.
Newark Airport
AHU-11

Tag: JO# 11498/ SO# 100111-01
Purchase Order# 437-1050-21181

QTY REQUIRED		
3	**WHEEL**	**TWIN CITY** - 365 EPFN, SWSI, CLASS 3, ARRG'T 4; SERIAL# 453550-001-00
3	**MOTOR**	**WEG** - 365T FRAME, 75 HP, 1800 RPM, TEFC, 3/60/230-460 VOLT; PART# 07518ET3E365T
55	**FILTERS (1 SET)**	**FLANDERS** - PREPLEAT 40 LPD, 24X24X2 UL-900, MERV 7
55		**VILEDON** - MINI 95, 24X24X4 UL-900, MERV 14
55		**FLANDERS** - VAPORCLEAN 10756, 24X24X12 CARBON CARTRIDGE FILTERS

Minimum order value of $650.
Prices good for 30 days.
Prices do not include freight.

9/25/2012

BUFFALO
AIR HANDLING

Preliminary O&M

J. Moore & Co.
Newark Airport

Sales Order # 100111-01

Purchase Order # E1078

AHU-11

7/6/11

BUFFALO
AIR HANDLING

Buffalo Air Handling Contact Information

New Jersey Representative:	J. A. Lockwood Co., Inc.
Tony Lockwood	260 Route 202/31, Suite 100
Scott Engberg	Flemington, NJ 08822
	Tel: (908) 284-1478
	Fax: (908) 806-2750
Buffalo Air Handling Factory:	Buffalo Air Handling
	467 Zane Snead Drive
	Amherst, VA 24521
	Tel: (434) 946-7455
	Fax: (434) 946-0226

First contact for service or parts should be the New Jersey representatives.

Subject to Terms and Conditions which are attached

BUFFALO
AIR HANDLING

#SMPP009

TERMS AND CONDITIONS OF SALE

The following are the Standard Terms and Conditions of Sale of the Buffalo Air Handling Division of Air & Liquid Systems Corporation ("Seller").

1. **ACCEPTANCE OF SELLER'S TERMS AND CONDITIONS OF SALE.** Seller and Buyer agree that the following terms and conditions will apply to any order from Buyer accepted by Seller. No order or contract will be binding on Seller unless and until accepted, and acknowledged by Seller's office in Amherst, Virginia. Sales representatives are not authorized to bind Seller. No terms or conditions other than those stated herein, whether contained in Buyer's purchase order or shipping release or elsewhere, and no written or oral agreement that purports to vary these terms and conditions will be binding on Seller, unless hereafter set forth in writing and signed by an authorized officer of Seller. Buyer's assent to the terms and conditions set forth herein will be conclusively presumed from Buyer's receipt of this acknowledgement without prompt written objection or from Buyer's acceptance of all or any part of the equipment or material ordered.

2. **CHANGES.** Equipment changes by Buyer involving design and/ or drawing modifications, or after approval and release for manufacture, will result in an administrative charge, in addition to any price adjustment for the change, and may result in a delay of the scheduled shipping date.

3. **CANCELLATION CHARGES.** An order canceled prior to shipment will be subject to cancellation charges.

4. **INVOICING TERMS.** Payment terms: Net 30 days, with interest charges of 1.5% per month thereafter. All shipments will be subject to the approval of Seller's credit department. Quotations are subject to acceptance within 30 days from quotation date.

Seller will invoice, and payment will be due in accordance with the payment terms above, for : a) shipment of complete order; b) partial shipment of order; c) finished product or work in progress when any shipment delay is caused by Buyer for any reason including, but not limited to, change in requirements, components not received, rigging or staging not available, site not ready, etc. Seller will be entitled to reasonable storage charges for any such delay caused by Buyer.

5. **DELIVERY.** Seller will use its best efforts to deliver on a timely basis. Seller, however, will not guarantee or accept consequential losses associated with its inability to meet a specific time of day or specific date. FOB origin.

6. **ESCALATION TERMS.** Prices on equipment of Seller's manufacture are firm for shipments made within 6 months from date of purchase order; for shipments made beyond 6 months from date of purchase order, prices are protected for 6 months from any announced price increase occurring later than the date of the purchase order. Beyond that period, prices will be adjusted to Seller's prices at time of shipment with adjustment limited to 20% of the purchase order price. Contracts providing for escalation based on an index will be escalated from the date of purchase order to the date of shipment using 100% of the quoted price as the base. Prices on equipment not of Seller's manufacture are subject to adjustment to the prices in effect at the time of shipment.

7. **FORCE MAJEURE.** Neither party will be liable for any failure or delay in performance due to force majeure conditions, including, but not limited to, war, riot or civil disturbance, accident or equipment breakdown, strikes or disputes with employees, actions of any governmental authority, compliance with any law order, regulation or directive of any governmental authority, shortages of or inability to obtain materials, supplies, transportation, fuel or energy, or any cause beyond the reasonable control of Seller or Buyer, as the case may be.

8. **TAXES.** All taxes which Seller may be required to pay or collect under any existing or future laws with respect to the sale, purchase, delivery, storage, manufacture, processing, use, consumption or transportation of any equipment ordered by Buyer, including taxes upon or measured by receipts from sales (except net income and equity franchise taxes) will be for the account of Buyer.

9. **PATENTS.** If the equipment is to be manufactured in accordance with Seller's specifications. Seller agrees to defend any proceeding brought against Buyer on a claim that the equipment furnished to Buyer infringes any patent in the United States and Seller agrees to pay all direct and actual damages and costs awarded against Buyer in any such proceeding, provided that Seller is promptly notified in writing of any such proceeding and given authority, information and assistance for the defense thereof. If Buyer furnishes the specifications then Buyer shall hold Seller harmless against any such claim which arises out of compliance with specifications.

10. **NON-CONFORMANCE.** Seller will replace, at the original point of delivery, equipment or material which upon inspection before installation is found defective or not in conformity with the applicable specifications, provided that written notice has been given of such defect or non-conformity within 15 days of receipt of equipment by Buyer and Seller is given reasonable opportunity to inspect. No claims will be accepted by Seller for the cost of any labor expended on such equipment or material, or for any separate special indirect, incidental or consequential damages to anyone. If Buyer does not give such notice, the equipment or material shall be deemed to be in all respects in accordance with the specifications.

11. **BUYER'S EXCLUSIVE REMEDY; LIMITATION OF DAMAGES.** In case of an alleged breach, Seller's entire liability and Buyer's exclusive remedy shall be as follows:

In all situations involving the performance or non-performance of equipment, Buyer's remedy is (1) the adjustment or repair of the equipment or, at Seller's option, the replacement of the equipment or (2) if Seller is unable to repair the equipment or replace it with equipment in good working order, Buyer will be entitled to a refund or credit in the amount of purchase price paid by Buyer for the equipment.

Seller's liability for damages to Buyer for any cause whatsoever and regardless of the form of action or claim, whether in contract or in tort, including negligence, shall be limited to 110% of the purchase price of the equipment or part that is the subject matter of, or directly related to, the action or claim on which such liability is based. In no event will Seller be liable for any lost profits, lost savings or any special, indirect, incidental or consequential damages, even if Seller has been advised of the possibility of such damages, or for any claim by Buyer based on any third party claim, except as provided in the Section entitled Patents.

12. **DRAWINGS.** Unless otherwise stated in the quotation, prices include a set of customer interface contract drawings and service manuals. If additional drawings are needed or Buyer-initiated changes require additional drawings, they will be provided only upon receipt of a written order authorizing additional charges for such drawings.

WARRANTY

Seller warrants for a period not in excess of 18 months from date of shipment or 12 months from date of installation, whichever is earlier, the design, construction and materials of Seller's products to be free from defects in materials and workmanship. Seller's sole obligation and Buyer's exclusive remedy under this Warranty is limited to the repair or replacement without charge, f.o.b. Seller's factory, of any defective parts. Seller will not be responsible for damages of any nature, resulting from breach of the above stated Warranty or from any defect in Seller's products, either in materials, design, or construction, or arising from the use of such products. Seller does not guarantee against abrasion, corrosion or erosion.

The above stated warranty constitutes the only warranty made by Seller and is given expressly in lieu of all other warranties express or implied, including any implied warranties of merchantability or fitness for a particular purpose.

Warranties on equipment not of Seller's manufacture are limited to the terms of any warranties furnished by Seller's suppliers to the extent they may be made available to Buyer.

J. Moore & Co.

Newark Airport
AHU-11

Buffalo Air Handling
SO# 100111
Preliminary
O&M

Data Sheets & Drawings	1
Fans	2
Motors	3
Coils	4
Filters	5
Dampers	6
Calculations - Pressure Drop	7
Electrical	8
Test Procedures	9

BUFFALO AIR HANDLING UNIT

UNIT: AC-11

REP: J.A. LOCKWOOD

PHONE: 908-284-1478

BUFFALO
AIR HANDLING

BUFFALO AIR HANDLING UNIT SERVICE MANUAL

WARNING

IMPROPERLY INSTALLED OR OPERATED EQUIPMENT CAN BE DANGEROUS AND MAY CAUSE INJURY. IT IS YOUR RESPONSIBILITY TO FAMILIARIZE YOURSELF WITH THE CONTENTS OF THIS MANUAL AS WELL AS OTHER WRITTEN MATERIAL SHIPPED WITH THIS FAN BEFORE IT IS OPERATED. KEEP UNAUTHORIZED PERSONNEL AWAY FROM THE FAN.

INDEX

1.0	Introduction	1
2.0	Representative/Equipment Information	2
3.0	Shipping & Receiving	4
4.0	Handling	4
5.0	Storage	4
6.0	Foundations	4
7.0	Installation and Assembly	5
8.0	Safety and Operation	8
9.0	Motors	9
10.0	V-Belt Drives	10
11.0	Bearings	10
12.0	Coils	12
13.0	Filters and Dampers	13
14.0	Preventative Maintenance & Lubrication	13
15.0	Ordering Spare Parts	15
16.0	Warranty	16
17.0	Cleanliness	16

1.0 INTRODUCTION

This manual provides information necessary to install, operate, and service Buffalo Air Handling units. Maintenance guidelines and procedures are set so that your equipment will continue to efficiently and safely operate with minimum repair or replacement.

An assembly drawing containing all pertinent data and dimensions for your particular equipment has been supplied with your order.

You may find it helpful to have the catalog pertaining to your particular air handling unit. These may be obtained through your nearest Buffalo sales representative or by writing directly to the factory.

- ***IT IS STRONGLY ADVISED THAT AN EXPERIENCED ERECTOR SUPERVISE THE INSTALLATION OF THE EQUIPMENT.***

Servicemen are available by arrangement through any Buffalo sales representative. Products must be used in accordance with the information specified in this manual and cabinet assembly drawings.

Regular inspections must be made to warrant safe equipment operation. Strict compliance with all safety and maintenance procedures are the responsibility of the user and are necessary for safe and efficient operation. Failure to follow these installation operating and maintenance procedures can result in accidents endangering personnel or equipment.

2.0 CONTACT / EQUIPMENT INFORMATION

2.1 REPRESENTATIVE INFORMATION

It is recommended that the following information be recorded for future inquiries regarding your air handling equipment.

Buffalo Air Handling
Sales Representative _____

Address _____

Telephone (_____)_____

Fax (_____)_____

2.2 EQUIPMENT INFORMATION

When contacting your Buffalo sales representative, please have your assembly drawing and data sheets readily available for possible questions that he or she may have. The following information should be recorded in this manual for quick referral if the assembly drawing or data sheets are not available. This information can be found on a nameplate mounted on the outside of the air handling unit.

Buffalo Air Handling
Shop Order Number _____

Size _____

V-Belt Drive Type _____ Qty. & Size of Belts_____

Motor Sheave Size _____ Bore _____Kwy_____

Fan Sheave Size_____ Bore _____Kwy_____

NOTES

#SMPP010

START-UP PROCEDURES
BUFFALO AIR HANDLING UNITS
PRE-START UP CHECKLIST AND SERVICE REQUEST

Use this form to check for proper installation of Buffalo Air Handling units. If prepaid start-up service was ordered as part of the Air Handling order, return this completed form to your local Buffalo Air Handling Sales Representative to schedule start-up. If start-up service was not ordered, but is desired, contact your local Buffalo Air Handling Sales Representative for a quotation and then return this completed form with purchase order to schedule the start-up. Please allow 3 – 4 weeks for start-up service.

Job Name _____ Installing Contractor _____

Street _____ Contractor Contact _____

City _____ Phone _____

PRE-START UP CHECKLIST

Before attempting to start-up the Air Handling Unit, confirm that the following actions have been completed (or will be completed prior to scheduled start-up). Refer to Buffalo Air Handling Service Manual G-875-G.

		YES	NO
1.	Unit installed on Support structure, leveled and shimmed.	☐	☐
2.	Proper assembly of unit and proper sealing of all shipping splits (welded or bolted)	☐	☐
3.	If units supplied with inertia bases, has concrete been poured in base?	☐	☐
4.	Release all shipping hold down devices.	☐	☐
5.	Has ductwork been installed so fan can be run?	☐	☐
6.	Check for proper clearance of all rotating components and adjust as required.	☐	☐
7.	Check bearings for proper lubrication, cleanliness, moisture, alignment locking and clearances.	☐	☐
8.	Align all drive components.	☐	☐
9.	Check motor rotation.	☐	☐
10.	Has power been brought to unit (fan, lights, etc.)?	☐	☐
11.	Have filters been installed in units.	☐	☐
12.	Are the VIV's and damper operators operational?	☐	☐
13.	Have VFD's been started, checked and parameters set. Air balance and control done?	☐	☐
14.	Has unit been cleaned out including coils and drain pans?	☐	☐

Note: In the event service is purchased from Buffalo Air Handling, customer can disregard items 6, 7, and 8. These will be done by Buffalo Air Handling service technician.

REQUEST FOR SERVICE TECHNICIAN

I acknowledge that all of the above items have been completed. I understand that if upon job inspection these requirements are not met, no start-up work will be performed and travel time and expenses will be charged at current hourly rates.

Name: _____ Company _____ Date _____

3.0 SHIPPING & RECEIVING

Standard terms of sale shipments are F.O.B. factory with shipping and handling allowed or not allowed as stated in the proposal. Therefore, it is to the interest of the buyer to carefully inspect all shipments before they are accepted from the carrier. Upon delivery, be sure that all items listed on the bill have been received. (Partial shipments are often made.)

Even though all equipment is carefully inspected and prepared for shipment at the factory, rough handling en route may cause damage to the fan and drive parts.

Any shortage, breakage, or damage noticed at time of delivery must be indicated on the carrier's freight bill and signed by the driver or carrier's representative.

4.0 HANDLING

When lifting our air handling units with a hook at a single point, a lifting rig with spreader bars, shown in Figure 1, are required. This rig must be furnished by contractor.

● ***SPREADER BARS ARE ESSENTIAL TO PREVENT CRUSHING OF THE UNIT'S SIDES.***

Air handling units must be lifted vertically, on a level plane, to prevent distortion and stress on the components.

Maximum shipping dimensions may necessitate the substitution of removable lifting lugs (optional). Lugs and hardware will be shipped loose for field installation. Lugs may be removed after lifting unit into position.

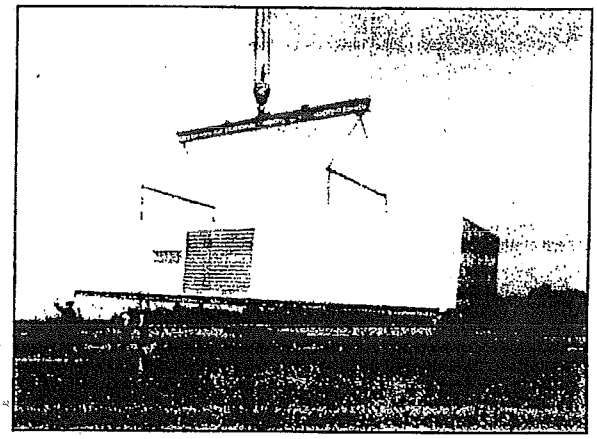

Figure 1. Proper Rigging.

5.0 STORAGE

●***STORE AIR HANDLING UNIT IN A DRY AND PROTECTED AREA, TO ENSURE THAT THE FAN COMPONENT'S SHAFT, BEARINGS, AND WHEEL ARE SHIELDED AGAINST DUST AND CORROSION.***

If it is necessary to store outdoors, special care must be taken to prevent moisture, corrosion, dust, or dirt accumulation. Coat the fan shaft with grease or rust preventive compound. Cover and seal bearings to prevent entrance of contaminants. The fan and motor shafts must be rotated every two weeks. Flexible plastic is suggested for covering. Use tarp or weatherproof paper to cover the exterior of the cabinet.

WARNING: EXTRA CAUTION MUST BE TAKEN TO PREVENT INTERNAL MOISTURE DAMAGE TO THE BEARINGS. IF AIR HANDLING UNITS ARE TO BE IN STORAGE OUTSIDE, THE FAN BEARINGS SHOULD BE COMPLETELY FILLED WITH GREASE. AFTER REMOVAL FROM STORAGE THE EXCESS GREASE MUST BE REMOVED AND PROPERLY RE-GREASED (Refer to Sections 11.3 and 11.6).

Also, care should be taken in the treatment of cooling and/or heating coils. Condensate or rain water moisture may lead to freezing, resulting in damage to the coils. If ıge is required, coils should be charged with nitrogen (optional).

6.0 FOUNDATIONS

A rigid level foundation is a must for every air handling unit. It assures permanent alignment of fan and driving equipment and freedom from excessive vibration, minimizing maintenance costs.

1. Floor mounted units, regardless of unit type or arrangement, are to be mounted on a level concrete floor pad. Pad to be sufficient height to allow for P-trap removal of condensate from unit drain pan. (Refer to Section 7.8).
2. Ceiling Mounted Units - *Small size units* can be suspended from structural supports using hanger rods supplied by others. *Larger size units* can only be suspended using a structural platform. For this type of installation, the platform must be rigid and level to assure permanent alignment of fan and coil section. It must be designed to carry the weight of the equipment with minimum deflection, plus the load imposed by the centrifugal forces set up by the rotating element.

3. Vibration Isolation - Rubber in shear or spring isolators (See Figure 2) may be provided to separate the vibration of rotating elements from the structure. Isolators for ceiling mounted units should be located between hanger rods and the air handling unit. Floor/platform mounted units may have internal (fan mounted on isolators in the unit) or external (below unit base) vibration isolators. When external vibration isolation is used, sheet metal, piping, and electrical flexible connectors must be installed by the installer. Internally isolated fans are secured for shipment with tie down bolts and shims.

● ***SHIPPING TIE DOWN BOLTS AND SHIMS MUST BE REMOVED BEFORE START-UP.***

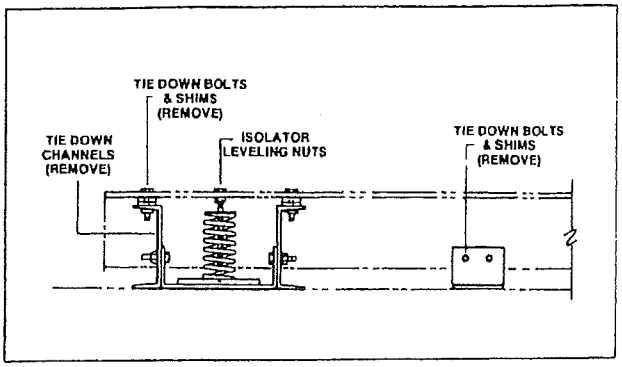

Figure 2. Tie-Down Bolts and Shims. (typical)

7.0 INSTALLATION

7.1 GENERAL

All air handling units are assembled with a test run at the factory. Units are shipped in either full, modular, or knocked down (special order) assemblies. Adjoining parts are numbered or lettered for easy field assembly. Gaskets, caulking, or sealers are furnished for use at the field assembly of joints. Omission of gasketing will cause leakage and improper alignment of the cabinet.

7.2 UNIT ASSEMBLY

Figure 3 on the following page illustrates a typical double-wall cabinet construction with a shipping split. The following assembly procedure is recommended:

1. Before removing shipping protection, complete unit should be moved into its proper location.
2. Blower section's motor and drive, if not factory mounted, should be mounted in place. Final alignment and adjustment of drive will be required before start-up. (Refer to Sections 10.0 and 11.0).
3. Coil Sections should be handled with care to prevent damage to the finned surface and piping connection. Internally piped units may have pipe supports that require removal prior to its installation.
4. Accessory sections, such as filter, damper, access, and humidifier sections may require field joining.

7.3 FAN ALIGNMENT

Fan has been aligned and balanced, at the factory.

● ***ALIGNMENT MUST BE CHECKED BECAUSE SHIPPING CAN ALTER FACTORY ALIGNMENT.***

To check alignment after shipment, spin wheel slowly by hand to see if fan wheel clears the fan inlets. It may be necessary to loosen wheel hub set screws and shift the wheel on the shaft to locate the wheel properly with the inlets. In most cases, the lip of the inlet bell or inlet cone should be even with or slightly extended into the wheel inlet. Generally, wheel-inlet bells are fitted for 70°F air as shown in Figure 4. However, consult with your Buffalo sales representative for proper lip alignment. (Refer to Section 8.1).

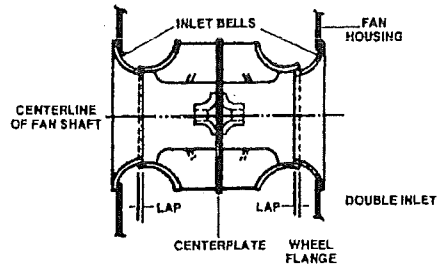

WHEEL FLANGES SHOULD OVERLAP EACH INLET BELL EQUALLY

NOTE: Refer to unit white print for wheel diameter.	
Wheel Diameter	**Lap (Inches)**
12¼-27"	⅛
30"	9/32
33-44½"	⅜
49-54½"	¼
60-66"	⅜

Figure 4. General Wheel-Inlet Bell Fits. (typical)

7.4 WATER COILS

Connection of the water coils to the unit system is by others. Refer to the unit drawing and instructions on the cabinet for correct orientation of the external piping.

7.5 DIRECT EXPANSION COILS

Connection of the direct expansion coils to the unit system is by others. Refer to the unit drawing and the instruction on the cabinet for correct orientation of the external piping.

Direct expansion coils require an expansion valve to be provided by others. Coil distributor has a factory sized orifice mounted on the coil.

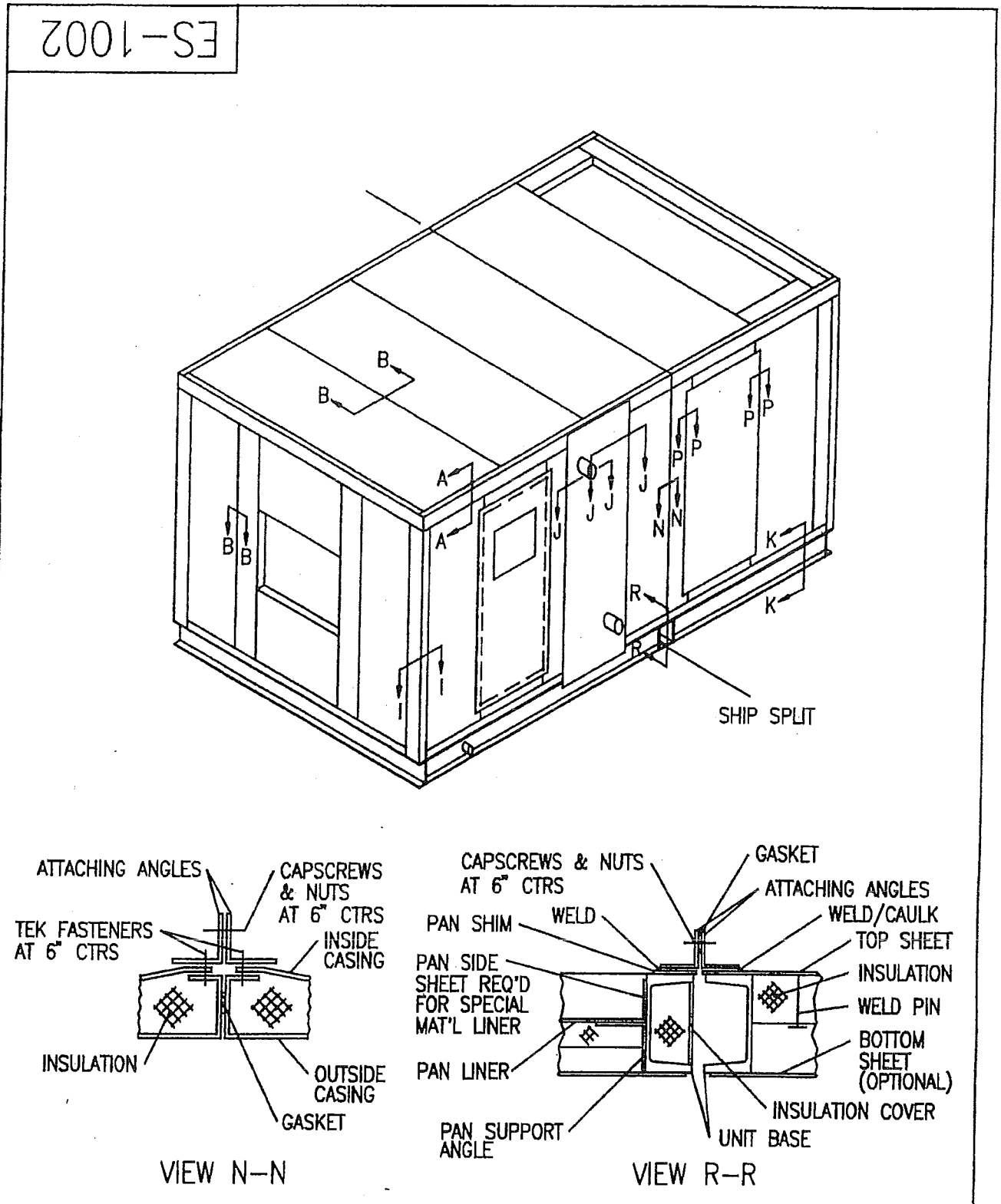

Figure 3. Air Handling Unit with Shipping Split.

7.6 STEAM COILS

Connection of steam coils to the steam system is by others. Refer to ASHRAE Fundamentals Guide for piping procedures. These general precautions are:

1. Make the supply pipe size and return pipe size the same as the coil connections.
2. Condensate should not be raised above coil return into overhead main or drain into mains under pressure except in step 3.
3. A pump and receiver or boiler return trap should be installed between coil condensate traps and overhead & return mains under pressure.
4. Provide all coils with proper air vents to eliminate non-condensate gases.
5. Steam piping should not be supported from steam coil. Both mains and coil should be supported separately.
6. Be sure piping is pitched to facilitate drainage of the coil.

7.7 ELECTRIC HEATING COILS

Electric coils are specifically designed to heat the air per customers specifications.

1. Full air flow over the electric coil must be continuously maintained without blockage of any part of the heating elements.
2. Do not operate below the design velocity.
3. The coil must be electrically interlocked with the fan to ensure that the fan is operating before the coil is energized.
4. For safe operation, make sure that no condensate or spray water is carried onto the electric coil.
5. The electric coil is installed similarly to the steam coil except for the extension of the terminal box from the unit side. Slide the electric coil into the unit so that the back of the terminal box is in contact with the unit side as shown in Figure 5. Attach the back of the terminal box to the unit side with sheet metal screws. Consult the unit drawings for details.

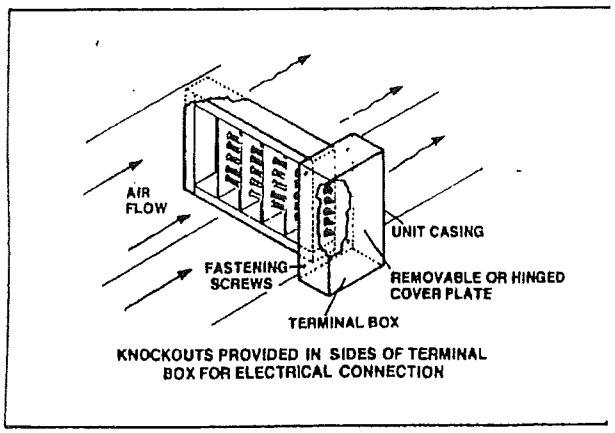

Figure 5. Electric Coil Installation.

7.8 CONDENSATE DRAIN CONNECTION AT PANS

External piping, including a trap for condensate, is required and furnished by others. To insure proper operation of an air handling cabinet and prevent property damage to a building, condensation from cooling coils must be collected in a drain pan and then carried away through the drain line. Improper sizing, trapping, or pitch are common causes of property damage. Refer to Figure 6 and 7 for correct drainage of condensate water.

Unit may require elevation on house keeping pad, roof curb, or structural steel.

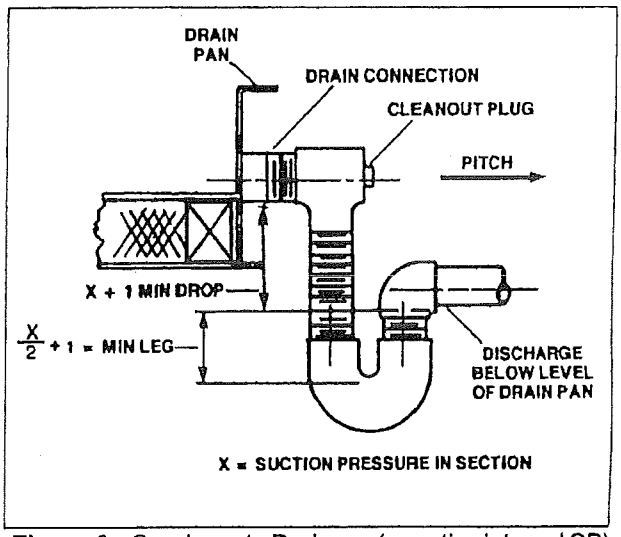

Figure 6. Condensate Drainage (negative internal SP) for Draw-Through Unit.

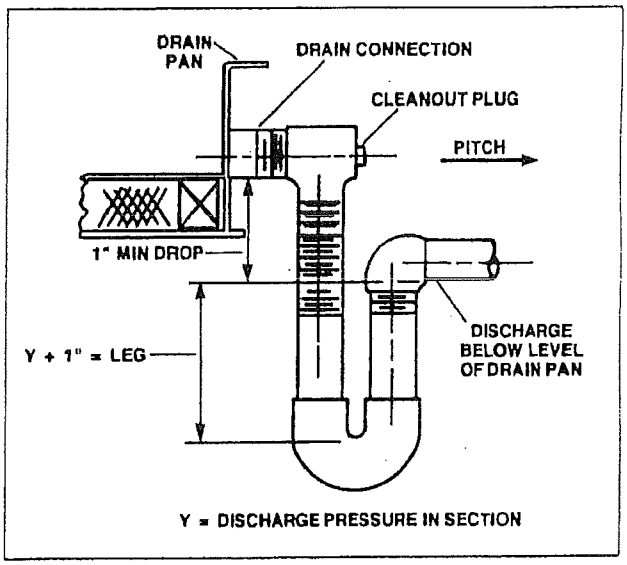

Figure 7. Condensate Drainage (positive internal SP) for Blow-Through Unit.

7.9 DAMPERS

Dampers are factory mounted and shipped as an integral part of the air handling unit. Damper motors are normally furnished by the temperature control contractor. However, in some cases, the damper motor may be supplied by the manufacturer.

1. When damper motors are furnished by the manufacturer, they are mounted on a rigid base and damper linkage is installed.

   ● *FINAL ADJUSTMENT OF LINKAGE IS TO BE DONE BY TEMPERATURE CONTROL CONTRACTOR.*

2. Damper motors, furnished by others, should be mounted on a rigid base. Do not mount on sheet metal that is not reinforced. Final adjustment of the damper linkage is to be performed by a temperature control contractor.

7.10 FILTER BOX AND FILTER CELLS

Filter boxes are manufactured in the factory to receive the filters. Filters are furnished when specified. When filters are specified, the filters, filter media, and hardware are packaged and shipped separately.

On side service panel filter boxes, it may be necessary to make a slight adjustment to the blank-off sheet. Filter service door will have a filter installation diagram.

7.11 FLEXIBLE CONNECTIONS

All equipment mounted on vibration isolators requires flexible connections. Internally isolated fans will have a factory mounted fan discharge flexible connection. Externally isolated sections require field mounted flexible connections into and out of the section. External flexible connections are furnished by others and are to be field fitted and mounted.

7.12 OPTIONAL ACCESSORIES

Optional accessories may include: humidifiers, roll filters, blenders, heat wheels, heat pipes, face & by-pass steam coils, motor starters, electrical controls, terminal boxes, junction boxes, internal lights, external lights, access platforms, railing, etc.

8.0 SAFETY AND OPERATION

8.1 BEFORE START-UP

Improperly installed or operated air handling unit is a hazard to both people and property. They must be installed by trained and experienced personnel. Installation must meet all pertinent state and local safety codes and Occupational Safety and Health Act (OSHA).

1. ● *FASTENINGS, ALL BOLTS, WHEEL HUB SET SCREWS, AND BEARING LOCKING COLLARS MUST BE CHECKED FOR TIGHTNESS.*
2. Bearings must be checked for alignment and make certain they are properly lubricated. Refer to sections 11.0 and 14.0.
3. Fan Wheel should be turned over by hand to see that it runs free and does not strike fan housing. If wheel strikes housing, the wheel may have to be moved on the shaft or the bearing pillow blocks moved and re-shimmed. Check location of wheel in relation to fan inlets. Be sure fan housing is not distorted. (Refer to Sections 7.2 and 7.3).
4. Fan Motor and wiring should be inspected.
5. V-belt Drive must be in alignment with belts at proper tension. Use a tension tester. Refer to Section 9.0.
6. All duct joints should be sealed to prevent air leaks. All debris should be removed from duct work, fan, and cabinet. Where feasible, access doors should be provided in the inlet and outlet ducts of the unit for servicing.
7. Dampers and VIV's should operate freely and blades closed tightly. Adjust linkage to close any open blades. VIV's should be partially closed during starting periods to reduce power requirements.

   NEVER CLOSE AN INLET DAMPER WHEN THE FAN IS RUNNING.

8. Coil and Accessory Sections require functional testing of mixing boxes, dampers, filters, drain, spray nozzles, piping, and pumping apparatus.
9. Access doors must be secured.
10. When required by unit operation and maintenance procedures, belt guards, shaft guards, and inlet screens are available from the factory. Insure that all guards are in place.

8.2 START-UP

1. Bump the fan motor to check for proper wheel rotation. The drive should be started in accordance with the manufacturer's recommendations.
2. The fan may now be brought up to speed. Watch for anything unusual, such as vibration, over-heating of bearings, motors, etc. Multi-speed motors should be started at the lowest speed and run at a high speed only after satisfactory slow speed operation. Check fan speed on V-belt driven units.

   ● *DO NOT EXCEED RPM SHOWN ON THE EQUIPMENT SUBMITTAL DATA SHEETS.*

3. At first indication of trouble or excessive vibration, shut down the fan and check for the source of the problem. (Refer to AMCA Standard 204-96, table 6.4, for guidance).

8.3 VARIABLE INLET VANES

Variable inlet vanes, VIV, regulate fan capacity through moveable vanes in the fan inlet. A linkage joins all vanes together, causing them to operate in unison when moving the control lever. The VIV is completely assembled and adjusted for proper operation at the factory. When the VIV is installed at the job site, make sure that the vanes will spin the air in the same direction as the wheel rotates.

Operate the control lever to ensure that the vanes move easily from open to closed positions. VIVs operated manually have a wing nut which locks the control lever in position on the quadrant. Automatic operation is accomplished by connecting a suitable control device to the VIV control lever.

On some fans, in order to limit the horsepower, a stop is used to control the maximum open position.
Do not remove this stop. Figure 8 illustrates a typical VIV. VIV's are serviced by removing the entire assembly.

8.4 ADJUSTABLE MOTOR BASE

Adjustable motor base facilitates tension adjustment of V-belt drive. Tension in V-belt drive should be checked before operation and periodically after initial operation.

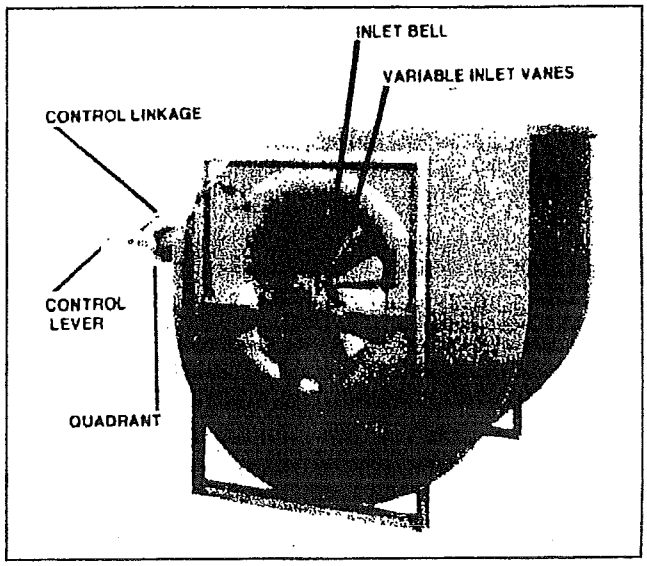

Figure 8. VIV Assembly.

9.0 MOTORS

After the motor has been mounted, aligned, and bolted down, wire to power supply through a disconnect switch, short circuit protection, and suitable magnetic starter with overload protection. All motors should be connected as shown on nameplate. Install all wiring and fusing in accordance with the National Electric Code and local requirements. Ensure that the power supply (voltage, frequency, and current carrying capacity of wires) is in accordance with the motor nameplate. Motors are received with bearings lubricated and require infrequent lubrication. Refer to the motor manufacturer, for lubrication.

9.1 TO REVERSE DIRECTION OF ROTATION

9.1.1 Single Phase Motors

Capacitor motors are reversed in rotation by interchanging connections to supply either the main or auxiliary winding.

9.1.2 Three Phase Motors

For three phase motors, interchange any two line leads. Normal operation of motors results in temperature rises according to motor insulation. The total motor operating temperature includes ambient temperature plus motor rise. The motor rise includes nameplate temperature rise, service factor allowance, and hot-spot allowance. The motor nameplate indicates the insulation class. The following is the maximum total operating temperature for each insulation class:

Insulation Class	°Fahrenheit	°Centigrade
A	221	105
B	266	130
F	311	155
H	356	180

9.2 MOTOR TROUBLESHOOTING

Various motor troubles can be caused by:

1. Low or high voltage.
2. Overload - high temperature - high amperage.
3. Armature unbalance - vibration and noise.
4. Worn bearings - armature rubs against stator.
5. Too much or not enough lubricant in bearings.
6. Commutator brushes on d-c motor worn or not seated under proper tension.
7. Loose hold down bolts - vibration and noise.
8. Dirt in windings - high temperature.
9. Low insulation resistance due to moisture - check resistance with megohm meter ("Megger") or similar instrument employing a 500 volt d-c potential. Resistance should read at least 1 megohm. If it is less, remove motor from service and send to a qualified motor repair shop.

10.0 V-BELT DRIVES

The V-belt drive is aligned at the factory before the cabinet is shipped. However, alignment must be rechecked prior to its operation.

V-belt drive assembly can be mounted as follows:

1. Clean the motor and fan shafts. Clean the bore of the sheaves and coat with a lubricant for ease of shaft entry.
2. Place fan sheave on the fan shaft and motor sheave on its shaft. Do not force the sheaves as this may damage bearings. Tighten the sheaves in place.
3. Move the motor on its slide base so the belts can be placed in the grooves of both sheaves without forcing. Do not roll belts or use a tool to force belts over the grooves.
4. Align the fan and motor shafts so they are parallel. The belts should be at right angles to the shafts. A straight edge or taut cord will aid in alignment.
5. Tighten the belts by sliding the motor on its base. Excessive tension causes undue bearing load.
6. Bump the fan and check motor rotation.
7. Start the fan and run at full speed.
8. Adjust the belt tension until only a slight bow appears on the slack side of the belts. If slippage occurs, an excessive squeal will be heard at start-up.
9. ● ***GIVE BELTS A FEW DAYS RUNNING TIME TO BECOME SEATED IN SHEAVE GROOVES - THEN READJUST BELT TENSION.***

NOTE: Belt tension on an adjustable pitch drive is obtained by moving the motor, not by changing the pitch diameter of the adjustable sheave.

11.0 BEARINGS

The fitting locations illustrated in Figure 9 are for air handling cabinets with centrifugal fans.

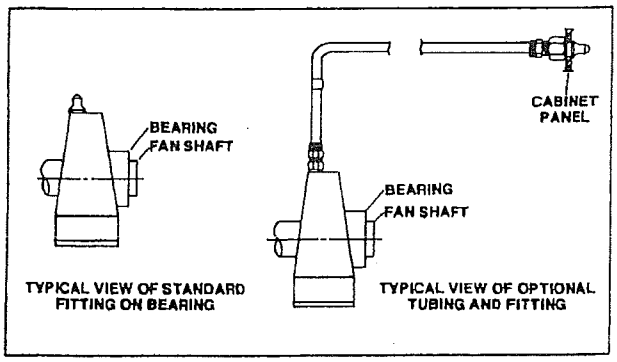

Figure 9. Cabinet Grease Fitting Locations.

11.1 CLEANING OF BEARINGS

Bearings removed from their shafts should be placed in a suitable container with a clean petroleum solvent and allowed to soak. Revolve each bearing by hand to help dislodge any dirt particles. All of the old grease and oil must be removed from bearing pillow block. A solvent may be used to clean. Sealed bearings cannot be cleaned and must be replaced if required.

11.2 BEARING LUBRICATION

● ***TO ENSURE SAFETY DURING RE-LUBRICATION, BE SURE THE DRIVE IS LOCKED OFF OR POWER IS DISCONNECTED FROM THE FAN MOTOR.***

IMPORTANT: It is recommended that only qualified personnel and proper equipment are used.

A good grade of lubricant is very important. Also, it is imperative to use the same product when re-lubricating the bearings because all greases are not chemically compatible.

Therefore, for the bearing lubricant used, refer to instructions on the fan housing label or fan manufacturer service manual. If neither can be located, contact your local Buffalo sales representative for the lubricant used.

Prior to the re-lubrication with a grease gun (adding of new grease), the fan should be in operation for at least two (2) hours to assure appropriate bearing and lubricant temperature.

NOTE: Just because a grease manufacturer states that a lubricant is good to a temperature (perhaps 350°F) does not mean the lubricant is suitable for bearing use. Bearings often require a SUS value of 70-100 at the operating temperature. Heaters can be used to raise the low temperatures into the correct operating range for a given lubricant.

NOTE: Motor bearings will often use a different lubricant than the fan. Refer to the motor manufacturer for recommendations.

11.3 GREASING PROCEDURE

Be careful to prevent any dirt from entering the bearing. Use a low-pressure gun. Fill the lower half housing with 1/3 to 1/2 full as well as packing the ring assembly housing the bearings with grease. Note that an excess amount of grease can cause bearings to overheat.

11.4 FREQUENCY OF RE-LUBRICATION

How often to re-lubricate can only be determined from your operating conditions. Determine the proper re-lubricant interval for your unit by setting up a schedule and visually examining the purged lubricant. If the lubricant is clean, lengthen the period between re-lubrications; if it is contaminated, shorten the interval. Refer to Table 2 for the recommended re-lubrication intervals.

Table 2. Bearing Re-lubrication Intervals.

Operating Condition		Operating Temperature	Grease Intervals
Dirt	Moisture	Degrees Fahrenheit	
Fairly Clean	None	35 to 120	6 to 12 Months
		120 to 160	1 to 12 Months
		160 to 200	1 to 4 Weeks
Moderate to Extremely Dirty	None	32 to 160	1 to 4 Weeks
		160 to 200	1 Week
Fairly Clean	Heavy Moisture & Direct Water Splash	32 to 200	1 Week

11.5 BEARING REPLACEMENT

1. Bearings should be inspected and thoroughly cleaned if necessary. If the bearing is disassembled, mark each part in relation to one another to avoid any error in re-assembly.
2. Note type of pillow block and location of the bearing.
3. Mount bearings in position on the shaft in accordance with the particular type of bearing furnished.
4. The shaft should be clean and free from burrs and other irregularities. Be sure bearing is not seated on worn flat sections.

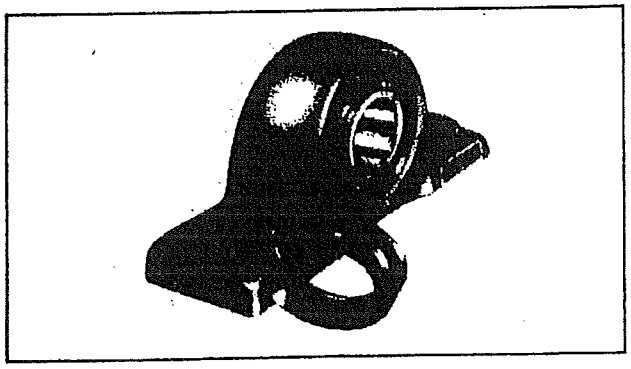

Figure 10. Ball Bearing.

11.5.1 Ball Bearing (See Figure 10)

1. This type of bearing is shipped assembled and ready for installation.
2. Slip each bearing pillow block and locking collar into position on the shaft.
3. Bolt pillow blocks in position on their mounting surfaces after shimming and aligning. They should be mounted so the fan wheel and shaft clear the fan housing.
4. Slide locking collar against end of inner ring. Turn collar in the direction of the shaft rotation until it grips the shaft and inner ring. Tighten the collar with a drift pin. Tighten all set screws or screws in collar.
5. To dismantle, reverse this procedure. Be sure to remove burr on shaft caused by set screw before removing pillow block from shaft. A honing stone will remove burr.

11.5.2 Spherical Roller Bearing (See Figure 11)

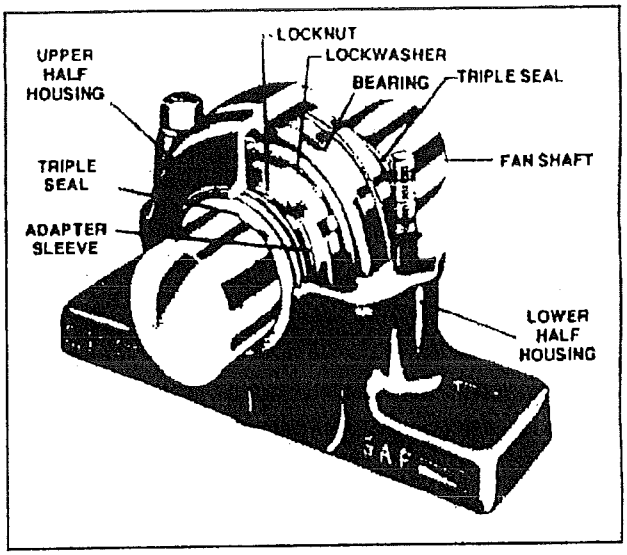

Figure 11. Spherical Roller Bearing.

The replacement of this type of bearing must be carefully installed per SKF procedures in order to obtain the correct bearing tolerances for proper operation. Contact your local Buffalo sales representative for this information.

11.6 Storage of Assembled Bearings

Equipment which is idle must be set in motion periodically in order to spread the lubricant over all bearing surfaces. Suitable intervals depend on ambient conditions. For storage of assembled bearings, they should be cleaned and packed full with petroleum or other suitable anti-rust agents.

● ***STORAGE GREASE MUST BE REMOVED THOROUGHLY AND THE PROPER AMOUNT OF A SUITABLE LUBRICANT APPLIED BEFORE OPERATION*** (Refer to Section 11.3).

12.0 COILS

12.1 HEATING AND COOLING COIL REMOVAL

Coils for the Air Handling Cabinet are mounted in cabinet section for horizontal air flow. When two or more coils are furnished, the larger coil is stacked on the bottom. To remove coil follow these steps:

1. Drain coil thoroughly and remove piping insulation adjacent to coils at side of cabinet.
2. Break threaded supply and return connections. Disconnect vent and drain fittings if present. For direct expansion coils, the inlet, and outlet connections are soldered or brazed.
3. Each coil bank has a separate removable side panel. Remove all fasteners and gaskets from the side panel. Remove any fasteners from internal cutoff sheets that would prevent coil removal.
4. Remove coil through the open side of cabinet. Do not lift or pull from the headers as damage may occur. Attach clamps or sling to the coil casing to remove coil.
5. When replacing coils reverse the above procedure.
6. Replace the gasket and reseal adjacent panels as required.

12.2 ELECTRIC COIL REMOVAL

Electric coils for Air Handling Cabinets are mounted in the cabinet section for horizontal air flow. The following steps should be followed Refer to Figure 12 and the following steps for the removal of this coil:

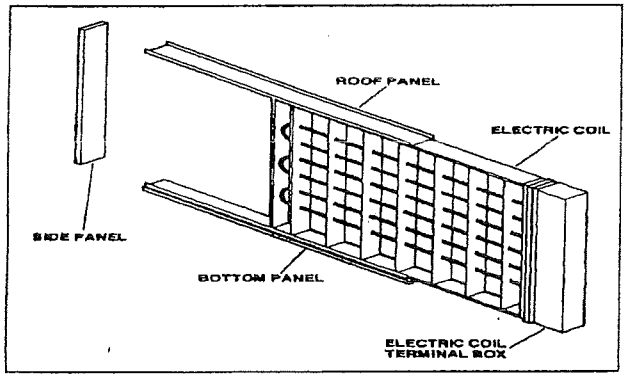

Figure 12. Electric Coil Removal.

1. Disconnect power to the unit from a remote location.
2. Remove the terminal box cover.
3. Remove all fasteners securing terminal box to unit side.
4. Remove all fasteners from internal cutoff sheets that would prevent coil removal.
5. Remove coil. Attach clamps or sling to the coil casing to remove coil.
6. When replacing the coil, reverse the above procedure.
7. Replace gasket. Reseal adjacent panels as required.

12.3 WATER COIL FLUSHING AND FREEZING PREVENTION

Water coils subject to freezing conditions, with the unit shut down, must be protected. There are three generally accepted methods of protection; blow all water from coil, flush coil with antifreeze, or use an antifreeze solution in the coil.

12.3.1 Equipment Required for Blowing Out Coils with Air

The blower recommended for this operation is the portable electric type commonly used on vacuum cleaners. The blower should supply 150 cfm at a static pressure of 45 inches of water. Do not use compressed air.

12.3.2 Procedure Using Air to Blow Down Coils

1. Shutoff the water supply.
2. Drain the coil, using vent and drain cocks provided. In Figure 13 and 14., this step would require opening of supply header vent or removing the plug from the supply header tee, and opening all drains.

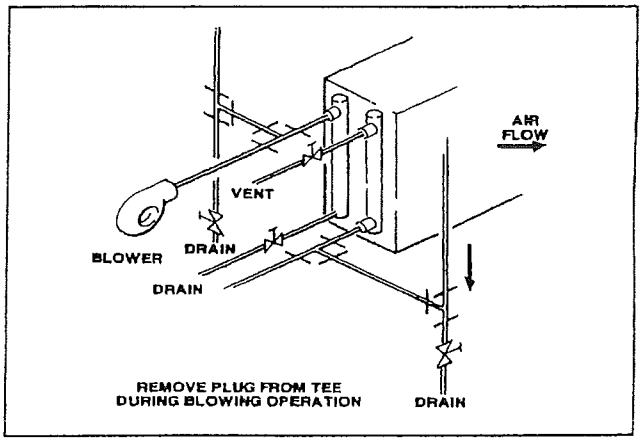

Figure 13. Horizontal Air Flow Coil (Blower Connected).

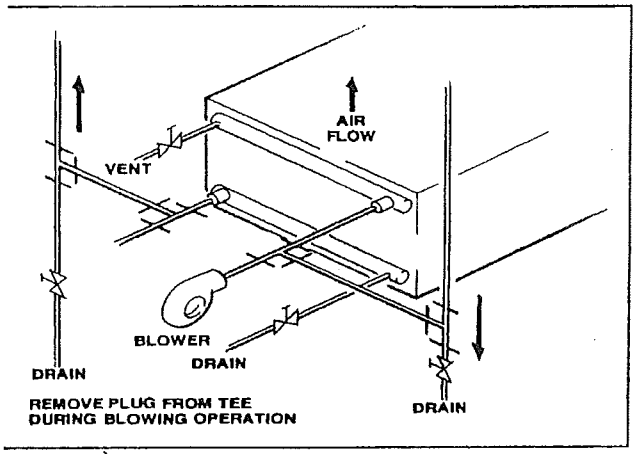

Figure 14. Vertical Air Flow Coil (Blower Connected).

3. Connect the blower to the coil supply or return header at a point where there will be no reduction in pipe size for the blower to the coil. In Figure 13, the blower is shown connected to the return header. Figure 14 shows the blower connected to the supply headers. Do not attempt to blow the coil by connecting the blower to the air vent.
4. Close all outlets on the header to which the blower is connected and remove the plug from the other header.
5. Operate the blower for one-half hour and then check coil for dryness.
6. Jar the coil slightly during the blowing operation. This will free any water which may be trapped and may also dislodge the dirt or scale which is trapping the water. Do not damage the coil in this process.
7. Allow the coil to stand for a few minutes after it is blown down to give the moisture that adhered to the walls of the tube a chance to accumulate. Blow it down again, and if any water comes out, repeat the blowing operation.
8. Leave all drains open.

12.3.3 Equipment Required to Flush Coils with Antifreeze

The required portable equipment consists of a one-inch centrifugal pump operating at a speed of approximately 3500 rpm and having a capacity of 25 gpm at a 35 ft. head.

There are several antifreeze solutions that can be used, the best of which are relatively expensive. Alcohol must not be used due to fumes and the hazard of fire.

12.3.4 Ethylene Glycol Coils

The use of an antifreeze/water solution as the circulating coolant should be incorporated at the equipment design phase. Coil performance is modified by the use of such a solution. The level of freeze protection is the responsibility of the system design engineer.

13.0 FILTERS AND DAMPERS

13.1 FILTERS

Replace or clean panel, cube, cartridge, or roll-type filters periodically as prescribed by the manufacturer.

13.2 DAMPERS

1. Dampers must be kept free of dirt or other foreign matter that may impede normal free movement. Linkage pivot points should be lubricated regularly. Axles rotate in sleeve bearings, which should not require any lubrication. It is recommended that all linkage joints be inspected periodically to insure tightness of set screws.
2. On multi-zone units, periodic checks should be made of bearings and axles to insure proper operation. Do not overlook the center bearings and axles (Refer to Figure 15).

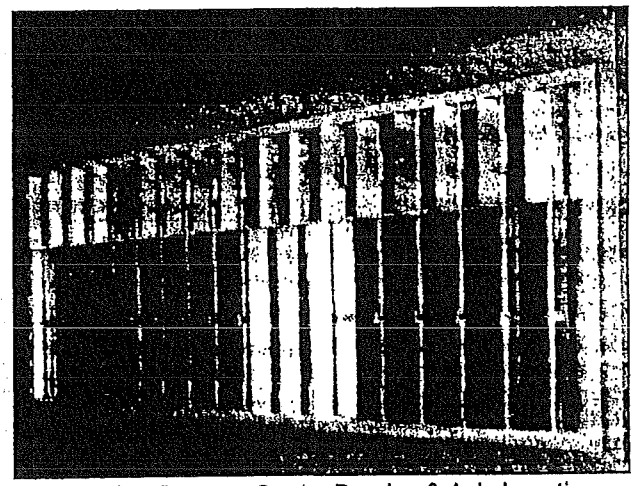

Figure 15. Damper Center Bearing & Axle Locations.

14.0 PREVENTATIVE MAINTENANCE AND LUBRICATION

14.1 GENERAL

Maintenance instructions will accompany the shipment of each air handling unit. All instructions and unit drawing should be kept for future reference. The following items are recommended to help maintain proper operation of the air handling unit:

1. A definite time schedule for inspecting all rotating parts should be established. The frequency of inspection depends on the severity of operation and the location of the equipment.
2. Fan bearing alignment should be checked at regular intervals. Misalignment can cause overheating, bearing failure and unbalance.

3. The fan bearing must be lubricated at regular intervals. Periodic inspections will be necessary. Refer to Section 11.4.

4. Bearings on high speed fans tend to run hot. Ball or roller bearing pillow blocks can have total temperatures of 180°F.

5. Foundation bolts and all set screws should be inspected for tightness.

6. Fans should be inspected for wear and dirt periodically. The wheel might have to be cleaned. A wash down with steam or water jet is usually sufficient. Cover the bearings so water won't enter the pillow block. Dirt accumulation in the housing should be removed. Fan wheels having worn blades should be replaced.

7. Check V-belt drives for belt wear, alignment and proper belt tension. Replace belts when worn with complete matched set.

8. Never run fan at higher speed that it was designed.

9. Lubricate motor bearings to the manufacturer's recommendations.

10. Eliminator plates should be washed annually.

11. Inspect the condition of the cabinet insulation and repair or replace as necessary.

14.2 INTEGRAL HORSEPOWER BALL BEARING MOTORS

1. Motors having pipe plugs or grease fittings should be re-lubricated while warm and at stand still.

2. Use a grease suitable for 15°F to 130°F temperatures.

3. Re-lubrication intervals must be selected to match your operating conditions. Table 3 provides a general guide for re-lubrication.

Table 3. Motor Re-lubrication Intervals.

HP Range	Standard Duty 8 Hrs. Per Day	Severe Duty 24 Hrs. Per Day Dirty, Dusty	Extreme Duty Very Dirty High Ambients
1.5 - 7.5	5 Years	3 Years	9 Months
10 - 40	3 Years	1 Year	4 Months
50 - 150	1 Year	9 Months	4 Months

14.3 FAN TROUBLES AND CORRECTIONS

The most common difficulties are listed below. These points should be checked in order to prevent needless delay and expense.

1. Capacity or pressure below rating
   a. Total resistance of system higher than anticipated.
   b. Speed too low.
   c. Dampers or VIV's not properly adjusted.
   d. Poor unit inlet or outlet conditions.
   e. Air leaks in system.
   f. Damaged wheel.
   g. Incorrect direction of rotation.
   h. Dirty filters.

2. Vibration and Noise
   a. Misalignment of bearings, wheel or V-belt drive.
   b. Unstable foundation.
   c. Foreign material in fan causing unbalance.
   d. Damaged wheel or motor.
   e. Broken or loose bolts and set screws.
   f. Bent shaft.
   g. Worn coupling.
   h. Fan wheel or driver unbalanced.
   I. Loose dampers or VIV's.
   j. Speed too high or fan rotating in wrong direction.
   k. Vibration transmitted to unit from some other source.

3. Overheated Bearings
   a. Too much grease.
   b. Damaged wheel or driver.
   c. Dirt in bearings.
   d. Excessive belt tension.

4. Overload on Driver
   a. Speed too high.
   b. Discharging over capacity due to existing system resistance being lower than original rating.
   c. Wrong direction of rotation.
   d. Electrical source - low voltage.
   e. Motor improperly wired.

14.4 REMOVAL OF FAN WHEEL AND SHAFT

Removal of fan wheels and shaft should be made through the inlet of the fan housing (Refer to Figure 16). To remove the wheel and shaft, the following must first be disassembled:

1. Belt guard (furnished only when specified)
2. V-belt drive
3. Bearings
4. Bearing supports
5. VIV linkage (if furnished)
6. Inlet bells or VIV's

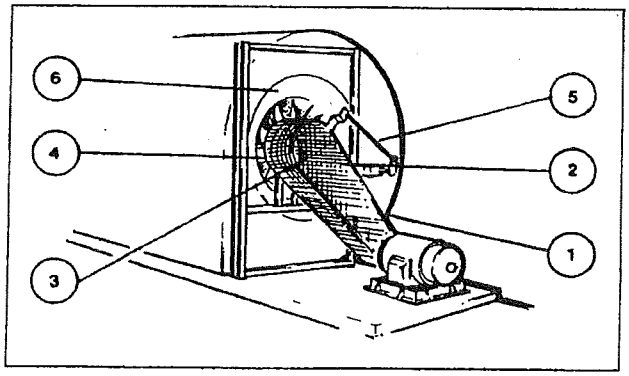

Figure 16. General Fan Wheel Assembly.

Units designed for wheel removal have been provided with adequate access. Other units require field modification.

Wheel should then be removed from the shaft. Ensure that all set screws are backed off before attempting to remove the wheel.

14.5 INSTALLATION OF NEW FAN WHEEL & SHAFT

New wheel and shaft are received disassembled. Follow these steps to install in the fan housing.

1. Remove the protective coating on shaft.
2. Remove keys from the shaft.
3. Carefully clean the inside of the wheel hub with solvent and lubricate bore for ease of shaft entrance.
4. Be sure that the set screws in the wheel hub are turned out to prevent possible scratching of the shaft. If three set screw holes appear in the hub, use only two - one over the key and the other leading key in direction of rotation.
5. Wheel and shaft are now ready for installation into the fan housing.
   a. Wheel should be placed into the fan housing, making sure the rotation arrow on the wheel agrees with the rotation arrow on the fan housing.
   b. After the wheel has been placed in the housing, they are blocked so that the wheel is centered in the fan inlet, with relation to the shaft center line.
   c. Slide the shaft into the wheel and tap key into the key way. Tighten the set screw over the key with only enough pressure to hold the wheel in position while placing the remaining parts in position.
   d. Slide the inlet bell/VIV into position and bolt to the housing.
   e. Mount the bearing supports in fan inlet.
   f. Mount the bearings on their supports, align the wheel with the inlet bell/VIV, align the bearings, shim pillow blocks where necessary, and tighten the nuts on all bolts.
   g. Tighten the set screws in the wheel hub over the key after final alignment. Then, tighten the set screw leading key in direction of air flow.
   h. If the fan has VIVs, assemble the main control shaft and mechanism per assembly drawing. Check its operating movement.
   i. Field balance **must** be anticipated any time a fan is disassembled for maintenance.

14.6 FAN BALANCING

Fan wheels are statically and dynamically balanced by the factory. The final balance of the fan is dependent on its installation and foundation.

Shut down the fan before personnel enters the air handling unit to place vibration pickups in place.

WARNING: Operation of any fan above alarm levels for a prolonged period of time or operation above shut down for **any** period of time, may cause equipment failure and extensive damage, as well as endangerment to personnel.

Refer to AMCA Standard 204-96, table 6.4, for guidance.

15.0 ORDERING SPARE PARTS

Contact your local Buffalo sales representative and supply the following information:

1. Shop order number stamped on the unit nameplate.
2. Size and type of unit, also stamped on nameplate.
3. Fan arrangement.
4. Description of the part required.
5. Special paints, coatings, or materials.

A bill of materials on the assembly drawing and a set of data sheets on your air handling unit was supplied before the unit was delivered. This information will be helpful when ordering spares.

RECOMMENDED SPARES

1. V-belts
2. Bearings
3. Filters

BEARINGS

1. State whether ball or roller
2. Manufacturer
3. Size and number
4. Fixed or floating
5. Parts required

16.0 WARRANTY

Seller warrants for a period not in excess of 18 months from date of shipment or 12 months from date of installation, whichever is earlier, the design, construction and materials of Seller's products to be free from defects in materials and workmanship. Seller's sole obligation and Buyer's exclusive remedy under this Warranty is limited to the repair or replacement without charge, F.O.B. Seller's factory, of any defective parts. Seller will not be responsible for damages of any nature, resulting from breach of the above stated Warranty or from any defect in Seller's products, either in materials, design or construction, or arising from the use of such products. Seller does not guarantee against abrasion, corrosion or erosion.

THE ABOVE STATED WARRANTY CONSTITUTES THE ONLY WARRANTY MADE BY SELLER AND IS GIVEN EXPRESSLY IN LIEU OF ALL OTHER WARRANTIES EXPRESS OR IMPLIED, INCLUDING ANY IMPLIED WARRANTIES OF MERCHANTABILITY OR FITNESS FOR A PARTICULAR PURPOSE.

Warranties on equipment not of Seller's manufacture are limited to the terms of any warranties furnished by seller's suppliers to the extent they may be made available to buyer.

Do not attempt to make any repair on fan equipment during its warranty period without the prior written approval of seller or its representatives; otherwise the warranty will be voided.

Seller shall not be liable for any injury to persons or property resulting from improper operation, installation, repair, or maintenance of equipment by customers or third parties. Experienced Service Representatives are available to supervise installation, or check over installation prior to start-up at reasonable charges. Arrangements can be made through your nearest Buffalo sales representative, or by phoning direct to the factory.

WARNING

Products must be used in accordance with the information specified in this manual and the manufactured-prepared fan assembly drawings. Regular inspections must be made to assure safe equipment operation. Strict compliance with all safety and maintenance procedures is the responsibility of the user and is necessary for safe and efficient operation of the fan. Failure to follow these fan installation, operation and maintenance procedures can result in accidents endangering personnel or equipment.

17.0 CLEANLINESS

Units **MUST** be inspected every three (3) months for cleanliness. Areas where dust or dirt can collect **MUST** be cleaned with an appropriate cleaning agent.

BUFFALO
AIR HANDLING

Telephone (434) 946-7455
FAX (434) 946-0226
www.buffaloair.com

BUFFALO AIR HANDLING
467 ZANE SNEAD DRIVE
AMHERST, VIRGINIA 24521

BUFFALO
AIR HANDLING

RECOMMENDED SPARE PARTS LIST

J Moore & Co.
Newark Airport
AHU-11

Tag: JO# 11498/ SO# 100111-01
Purchase Order# 437-1050-21181

QTY REQUIRED		
3	**WHEEL**	**TWIN CITY** - 365 EPFN, SWSI, CLASS 3, ARRG'T 4; SERIAL# 453550-001-00
3	**MOTOR**	**WEG** - 365T FRAME, 75 HP, 1800 RPM, TEFC, 3/60/230-460 VOLT; PART# 07518ET3E365T
55	**FILTERS (1 SET)**	**FLANDERS** - PREPLEAT 40 LPD, 24X24X2 UL-900, MERV 7
55		**VILEDON** - MINI 95, 24X24X4 UL-900, MERV 14
55		**FLANDERS** - VAPORCLEAN 10756, 24X24X12 CARBON CARTRIDGE FILTERS

Minimum order value of $650.
Prices good for 30 days.
Prices do not include freight.

9/25/2012

BUFFALO
AIR HANDLING

Preliminary O&M

J. Moore & Co.
Newark Airport

Sales Order # 100111-01

Purchase Order # E1078

AHU-11

7/6/11

BUFFALO
AIR HANDLING

Buffalo Air Handling Contact Information

New Jersey Representative:
Tony Lockwood
Scott Engberg

J. A. Lockwood Co., Inc.
260 Route 202/31, Suite 100
Flemington, NJ 08822
Tel: (908) 284-1478
Fax: (908) 806-2750

Buffalo Air Handling Factory:

Buffalo Air Handling
467 Zane Snead Drive
Amherst, VA 24521
Tel: (434) 946-7455
Fax: (434) 946-0226

First contact for service or parts should be the New Jersey representatives.

Subject to Terms and Conditions which are attached

BUFFALO
AIR HANDLING

#SMPP009

TERMS AND CONDITIONS OF SALE

The following are the Standard Terms and Conditions of Sale of the Buffalo Air Handling Division of Air & Liquid Systems Corporation ("Seller").

1. **ACCEPTANCE OF SELLER'S TERMS AND CONDITIONS OF SALE.** Seller and Buyer agree that the following terms and conditions will apply to any order from Buyer accepted by Seller. No order or contract will be binding on Seller unless and until accepted, and acknowledged by Seller's office in Amherst, Virginia. Sales representatives are not authorized to bind Seller. No terms or conditions other than those stated herein, whether contained in Buyer's purchase order or shipping release or elsewhere, and no written or oral agreement that purports to vary these terms and conditions will be binding on Seller, unless hereafter set forth in writing and signed by an authorized officer of Seller. Buyer's assent to the terms and conditions set forth herein will be conclusively presumed from Buyer's receipt of this acknowledgement without prompt written objection or from Buyer's acceptance of all or any part of the equipment or material ordered.

2. **CHANGES.** Equipment changes by Buyer involving design and/ or drawing modifications, or after approval and release for manufacture, will result in an administrative charge, in addition to any price adjustment for the change, and may result in a delay of the scheduled shipping date.

3. **CANCELLATION CHARGES.** An order canceled prior to shipment will be subject to cancellation charges.

4. **INVOICING TERMS.** Payment terms: Net 30 days, with interest charges of 1.5% per month thereafter. All shipments will be subject to the approval of Seller's credit department. Quotations are subject to acceptance within 30 days from quotation date.

Seller will invoice, and payment will be due in accordance with the payment terms above, for : a) shipment of complete order; b) partial shipment of order; c) finished product or work in progress when any shipment delay is caused by Buyer for any reason including, but not limited to, change in requirements, components not received, rigging or staging not available, site not ready, etc. Seller will be entitled to reasonable storage charges for any such delay caused by Buyer.

5. **DELIVERY.** Seller will use its best efforts to deliver on a timely basis. Seller, however, will not guarantee or accept consequential losses associated with its inability to meet a specific time of day or specific date. FOB origin.

6. **ESCALATION TERMS.** Prices on equipment of Seller's manufacture are firm for shipments made within 6 months from date of purchase order; for shipments made beyond 6 months from date of purchase order, prices are protected for 6 months from any announced price increase occurring later than the date of the purchase order. Beyond that period, prices will be adjusted to Seller's prices at time of shipment with adjustment limited to 20% of the purchase order price. Contracts providing for escalation based on an index will be escalated from the date of purchase order to the date of shipment using 100% of the quoted price as the base. Prices on equipment not of Seller's manufacture are subject to adjustment to the prices in effect at the time of shipment.

7. **FORCE MAJEURE.** Neither party will be liable for any failure or delay in performance due to force majeure conditions, including, but not limited to, war, riot or civil disturbance, accident or equipment breakdown, strikes or disputes with employees, actions of any governmental authority, compliance with any law order, regulation or directive of any governmental authority, shortages of or inability to obtain materials, supplies, transportation, fuel or energy, or any cause beyond the reasonable control of Seller or Buyer, as the case may be.

8. **TAXES.** All taxes which Seller may be required to pay or collect under any existing or future laws with respect to the sale, purchase, delivery, storage, manufacture, processing, use, consumption or transportation of any equipment ordered by Buyer, including taxes upon or measured by receipts from sales (except net income and equity franchise taxes) will be for the account of Buyer.

9. **PATENTS.** If the equipment is to be manufactured in accordance with Seller's specifications. Seller agrees to defend any proceeding brought against Buyer on a claim that the equipment furnished to Buyer infringes any patent in the United States and Seller agrees to pay all direct and actual damages and costs awarded against Buyer in any such proceeding, provided that Seller is promptly notified in writing of any such proceeding and given authority, information and assistance for the defense thereof. If Buyer furnishes the specifications then Buyer shall hold Seller harmless against any such claim which arises out of compliance with specifications.

10. **NON-CONFORMANCE.** Seller will replace, at the original point of delivery, equipment or material which upon inspection before installation is found defective or not in conformity with the applicable specifications, provided that written notice has been given of such defect or non-conformity within 15 days of receipt of equipment by Buyer and Seller is given reasonable opportunity to inspect. No claims will he accepted by Seller for the cost of any labor expended on such equipment or material, or for any separate special indirect, incidental or consequential damages to anyone. If Buyer does not give such notice, the equipment or material shall be deemed to be in all respects in accordance with the specifications.

11. **BUYER'S EXCLUSIVE REMEDY; LIMITATION OF DAMAGES.** In case of an alleged breach, Seller's entire liability and Buyer's exclusive remedy shall be as follows:

In all situations involving the performance or non-performance of equipment, Buyer's remedy is (1) the adjustment or repair of the equipment or, at Seller's option, the replacement of the equipment or (2) if Seller is unable to repair the equipment or replace it with equipment in good working order, Buyer will be entitled to a refund or credit in the amount of purchase price paid by Buyer for the equipment.

Seller's liability for damages to Buyer for any cause whatsoever and regardless of the form of action or claim, whether in contract or in tort, including negligence, shall be limited to 110% of the purchase price of the equipment or part that is the subject matter of, or directly related to, the action or claim on which such liability is based. In no event will Seller be liable for any lost profits, lost savings or any special, indirect, incidental or consequential damages, even if Seller has been advised of the possibility of such damages, or for any claim by Buyer based on any third party claim, except as provided in the Section entitled **Patents.**

12. **DRAWINGS.** Unless otherwise stated in the quotation, prices include a set of customer interface contract drawings and service manuals. If additional drawings are needed or Buyer-initiated changes require additional drawings, they will be provided only upon receipt of a written order authorizing additional charges for such drawings.

WARRANTY

Seller warrants for a period not in excess of 18 months from date of shipment or 12 months from date of installation, whichever is earlier, the design, construction and materials of Seller's products to be free from defects in materials and workmanship. Seller's sole obligation and Buyer's exclusive remedy under this Warranty is limited to the repair or replacement without charge, f.o.b. Seller's factory, of any defective parts. Seller will not be responsible for damages of any nature, resulting from breach of the above stated Warranty or from any defect in Seller's products, either in materials, design, or construction, or arising from the use of such products. Seller does not guarantee against abrasion, corrosion or erosion.

The above stated warranty constitutes the only warranty made by Seller and is given expressly in lieu of all other warranties express or implied, including any implied warranties of merchantability or fitness for a particular purpose.

Warranties on equipment not of Seller's manufacture are limited to the terms of any warranties furnished by Seller's suppliers to the extent they may be made available to Buyer.

J. Moore & Co.

Newark Airport
AHU-11

Buffalo Air Handling
SO# 100111
Preliminary
O&M

Data Sheets & Drawings	1
Fans	2
Motors	3
Coils	4
Filters	5
Dampers	6
Calculations - Pressure Drop	7
Electrical	8
Test Procedures	9

1
Data Sheets & Drawings & Service Bulletin

BUFFALO AIR HANDLING

Air Handling Unit Information

Sales Order: 100111-01 | Dwg. No.: E-11498-1
Job Order: 11498 | Revision: C

Data Sheets
AC2000 Data Sheets, Version 6.00

GENERAL

Customer:	J Moore & Co. Livingston, NJ	Qty/Size/Type:	1 | 87 | BF3GIPFQC3H
End User:	Newark Airport	Sales Office:	230 NJ - J.A. Lockwood Co., Inc.
Engineer:	RG Vanderweil / NY-NJ Port Authority	Sales Rep.:	Engberg
Mark:	AHU-11	Project Mgr.:	Dave Lewandowski
Cust. PO:	E1078	Designer:	Malcolm Childress

UNIT CONSTRUCTION

CASING: 3" Thick w/ polyurethane foam insulation — Design Pressure (+/-) 10 inches W.G.

Roof: Flat — Environment: Indoor construction

Exterior:	18	GA	G90 Galvanized Steel	Fasteners: Exterior	Zinc-plated	Interior: Zinc-plated
Interior:	18	GA	G90 Galvanized Steel	-	Entire unit except cooling coil section	
Interior:	18	GA	304 Stainless Steel	-	Cooling coil section	
Bulkhead:	18	GA	G90 Galvanized Steel	-	Double wall construction	

Exterior Painted: Yes — Paint Finish: Polyurethane — Color: Gray (Standard)

Interior Painted: Yes — Paint Finish: (See Notes) — Color: (See Notes)

Thermal Break Construction: Yes — Location: Entire unit

Knockdown Construction: Yes — KD Type: (See Notes)

Unit Installed On [1]: Housekeeping pad or building floor

[1] - *Provide level foundation under perimeter of each section.*

Insulation Type: Polyurethane foam - Entire unit

BASE [2]: C6 x 8.2 lb/ft Steel Structural — Polyurethane foam insul.*, 20 GA galv. steel coversheet & removable lifting lugs

Floor Sht.: 10 GA G90 galvanized steel - Entire unit except cooling coil section

Floor sheets are continuously welded with no turned-up perimeter lip.

Drain Pan: 16 GA IAQ sloped 304 Stainless steel - Cooling coil section

Drain Pan Connection Hand: RH & LH - Drain pan to be sloped to both sides with a drain on each side

[2] - *All black steel, Including unit base, shall be painted w/ epoxy mastic.*

* - *Base assembly meets NFPA 90A per UL723*

DOORS [3]:

[3] - *Refer to main assembly drawing for door locations.*

Qty:	Size:	Type [4]:	(Qty) Latches:	Dead Lights:
5	24 x 72	Dual-seal	(2) Alegis	12 x 12 Thermal pane
2	36 x 72	Dual-seal	(2) Alegis	12 x 12 Thermal pane

[4] - *Standard construction (Single-seal type) and Thermal break construction (Dual-seal type)*

Notes:
1. Unit interior to be painted with an antimicrobial finish.
2. Floor drains furnished in all sections without a drain pan.
3. Door handles to be Allegis with roller cam mechanisms
4. Provide a locking hasp for each door.
5. Doors to have pressure ports.
6. Base insulation to be 3" thick.
7. The unit will be complete knock down construction, with parts and components shipped on section bases and pallets as required.

7/6/2011 1:22 PM

BUFFALO AIR HANDLING

Air Handling Unit Information

Sales Order: 100111-01 | Dwg. No.: E-11498-1

Job Order: 11498 | Revision: C

Data Sheets

AC2000 Data Sheets, Version 6.00

WEIGHT

Unit shipped in N/A *sections.* *Max. weight/section:* ____ LB *Max. opening size:* 96 H x 96 W x ____ D *(In.)*

Sec.[5]	Description	Weight LB
1	Inlet	7,000
2	Final Filter	4,500
3	Cooling Coil	13,000

Sec.*	Description	Weight LB
4	Fan	16,000
5	Cooling Coil (Upper)	1,400
6	Fan (Upper)	1,800

[5] - *Section (Sec.) listed in direction of airflow.*

Total Estimated Weight (Less Water) LB: 43,700

FAN

**** Performance data is reflective of one fan ****

Duty	Qty	Mfr.	Model	Size	Dia IN	Rot./Dis.	Cl.	Arr.	ACFM	TSP IN WG	ESP IN WG	Fan BHP	RPM	MRPM	OV FPM
Supply	3	Twin City	EPFN	365	36.5	CW&CCW/Axia	3	4	29,000	8.80	4.50	52.73	1,547	1,884	N/A

☐ *Bolted Door* ☐ *Drain w/ plug* ☐ *Inlet Screen(s)* ☒ *100% diameter* ☒ *100 % Wheel Width* *HP w/ belt losses:* 0.00

☐ *Vinyl Fan Lube Lines (Std)* ☒ *Screen Enclos.* ☐ *SPB Bearings* ☐ *Bearing Life*

☐ *Monorail - Fan & Motor* ☐ *Removable Panel* *Large Enough to Remove:*

**** See attached curve(s) for additional performance data ****

Notes:
1. Fans to be elevated to centerline of unit height.
2. All fans to have piezometer rings. Transmitters furnished and installed by others.

MOTOR

Duty	Qty	Mfr.	Type	Efficiency	HP	Nom. RPM	Volt./Ph/Hz	Frame	Wgt. LB	Pos.
Supply	3	Weg	TEFC	Premium	75	1800	460/3/60	365T	840	Dir.

☐ *Extended vinyl motor lube line, if applicable* ☒ *Suitable for use w/ VFD*

Notes: 1. All motors to have AEGIS Shaft Grounding Rings.

VIBRATION ISOLATION

Duty	Mfr.	Qty	Deflect. IN	Base Type	Seismic Isolation	Series Type	% Eff.	Fan Thrust Restraints
Supply	Amber Booth	12	2	Structural	No	SW	99.3	Required

Notes:

FILTER

	Mfr.	Type	Model	MERV	Cl.	H	x	W	Size(s) IN	Serv.	Frame Mat'l	Gauge
A	Flanders	Panel	Pre Pleat 40 LPD	8	2	5	x	11	24x24x 2	Up	Galvanized Stl.	0-3" Magnehelic
A	Viledon	Panel	Mini 95 4" deep	14	1	5	x	11	24x24x 4	Up	Galvanized Stl.	
B	Flanders	Cube	Vaporclean 1076	N/A	-	5	x	11	24x24x 12	Up	Galvanized Stl.	0-1" Magnehelic

Ship Filters Direct to Job Site *BAH shall supply* 3 *set(s) of extra filters for* *Pre and Intermediate MERV 14 filters ONLY*

Notes:

BUFFALO AIR HANDLING

Air Handling Unit Information

Sales Order: 100111-01 | Dwg. No.: E-11498-1

Job Order: 11498 | Revision: C

Data Sheets

AC2000 Data Sheets, Version 6.00

COIL

Duty	Qty	Mfr.	Model	Fins / Mat'l.	Tube Size /Mat'l.	Csg. Mat'l.	Depth IN	Hdr/Con Mat'l.	Con/Pull Hand
Cooling	12	Aerofin	W-9.0AS-39.0 X 54.0-8-0.666	0.0095" Al	5/8" OD x .035" Cu	304 SS	12.5	Cu/RB	(See Notes)
Heating 11.1	1	Aerofin	HW-7.0AF-60.0 X 60.0-2-1	0.0095" Al	5/8" OD x .035" Cu	Galv. Stl.	6.0	Cu/RB	(See Notes)
Heating 11.2	1	Aerofin	HW-8.0AF-60.0 X 60.0-2-1	0.0095" Al	5/8" OD x .035" Cu	Galv. Stl.	6.0	Cu/RB	(See Notes)
Heating 11.3	1	Aerofin	HW-9.0AF-60.0 X 60.0-2-1	0.0095" Al	5/8" OD x .035" Cu	Galv. Stl.	6.0	Cu/RB	(See Notes)
Heating 11.4	1	Aerofin	HW-12.0AS-60.0 X 22.0-1-0.25	0.0095" Al	5/8" OD x .035" Cu	Galv. Stl.	6.0	Cu/RB	(See Notes)

*** See attached coil selections for performance data ***

CS = Carbon Steel
RB = Red Brass

Coil Racks: Yes | If 'Yes' for: cooling coils only | Rack Mat'l.: Stainless steel

Intermediate Drain Pans: Yes | If 'Yes' for: cooling coils only | Mat'l.: 304 Stainless Steel

Notes:
1. Intermediate drain pans to be double sloped.
2. Coil racks to be designed to allow face removal of coils.
3. Cooling coil connections to be turned 90° up and downstream. Supply connection to be turned downstream and the return connection to be upstream.
4. Extended cooling coil piping to be furnished and installed in the field by others.
5. Maximize the space between the coil headers to allow as much space for piping as possible.
6. Provide a coil pull panel on the RH side of unit only.
7. Heating coils to be removed for shipment.

MIXING & DISTRIBUTION

No.	Duty	Type	Mfr.	Model	Qty	W IN x H IN	Mat'l	Blade	Fail Pos.	Act. By	Type	Signal
1	Fan Inlet	Damper	Ruskin	OD-102	3	51 x 51	GV	Opposed	N/A	Others	N/A	N/A

Damper No. that have modulating operators: | or have two-position operators:

Notes:

ELECTRICAL

120V Single Point Wiring: Yes , Motor Single Point Wiring: Yes @ 460V | SPW NEMA Enclosure(s): 3R

*** Motor wiring may terminate at a junction box, disconnect and/or VFD ***

Receptacles: Yes | Qty: 1 | Type: GFCI 20A | 20A | 1 Hour Timer: Yes | Qty: 1

Lights: Yes | Qty: 6 | Type: Marine (Incandescent) | Bulbs Furnished By: BAH (Shipped Loose)

Duty	VFD Mfr.	Model No.	Qty	NEMA	Voltage	HP	Supplied By	Mounted By
							Others	Others

Switches	Qty	NEMA	Voltage	HP	Supplied By	Mounted By	Conduit Material
Mtr. Non-Fused Disconnect(s)	3	4	460V	75	BAH	BAH	EMT (Std)

Notes:
1. Mount light fixtures so that they are accessible from a ladder. IE: Do not mount over the fan scroll.
2. Provide disconnects with grounding lug and auxiliary contacts. BAH to seal conduit to prevent humid air from condensing inside the disconnect.

7/6/2011 1:22 PM

BUFFALO AIR HANDLING

Air Handling Unit Information

Sales Order: 100111-01 Dwg. No.: E-11498-1

Job Order: 11498 Revision: C

Data Sheets

AC2000 Data Sheets, Version 6.00

TESTING & SERVICES

BAH shall provide the following factory test(s) in presence of customer(s) with two (2) weeks notice:

- [ ] None
- [X] Performance (ES-8104)
- [ ] Velocity Profile (ES-8108)
- [ ] Sound Power (ES-8105)
- [ ] Sound Pressure (ES-8106)
- [ ]
- [X] Vibration (ES-8107) in accordance with ANSI S2.19, Grade G6.3, w/ 0.16 IPS filtered in maximum vibration allowed.
- [ ] Leakage* (ES-8110, Neg./Pos. Pressure - Orifice Plate) Max. 1/2 % of design CFM @ pressures shown below.

* - Minimum allowable leakage shall be 50 CFM. 435 Total CFM Allowed at negative 10.0 " WG & positive 10.0 " WG

- [X] Deflection (ES-8109) Test Pressure: Negative 10.0 " WG & positive 10.0 " WG Deflection not to exceed L/240

BAH shall provide the following field service(s) :

- [ ] None
- [X] Start-up
- [ ] Start-up Supervision
- [X] Training
- [X] Erection Supervision
- [ ] Deflection (ES-8109)
- [X] Leakage Test
- [ ] Vibration Test
- [ ]

Notes:
1. Vibration spectrum required from 10% to 100%.
2. Travel expenses for two Port Authority personnel to witness the testing is included.

MISCELLANEOUS NOTES

1.	Remove sharp edges from flex connection straps. Straps must have rounded edges.
2.	Unit to be ETL labeled.
3.	THE COOLING COIL DRAIN PAN CONDENSATE CONNECTIONS MUST BE PROVIDED ONBOTH SIDES OF THE UNIT DUE TO THE SPLIT IN THE CHANNEL BASE RUNNING THE LENGTH OF THE UNIT.J.MOORE & Co. HAS STATED THAT THEY WILL PROVIDED A FLOOR DRAIN ON BOTH SIDES OF THE UNIT.
4.	THE COOLING COIL PIPING IS TO BE PROVIDED BY J.MOORE & Co. AND THEY WILL PROVIDE THE PIPING DETAIL DRAWINGS.

REVISIONS

Rev.	Date of Change	Init.	Description of Change(s)
A.	12/30/10	I.J.	1. MAX. OPENING SIZE WAS 117H X 108W. 2. KNOCKDOWN CONSTRUCTION WAS NO. 3. UNIT CONSTRUCTION NOTE 7 - ADDED. 4. COOLING COIL MODEL WAS W-10.5AF-31.5 X 66.5-8-1. 5. UPDATED FAN RATINGS. 6. MOTOR WAS 60 HP. 7. FILTERS WERE 4H X 13W. 8. DISCONNECT SWITCHES WERE NEMA 12. 9. ELECTRICAL NOTE 2 - ADDED "BAH TO SEAL .....". 10. DELETED FACTORY LEAKAGE TEST. 11. ADDED FIELD LEAKAGE TEST. 12. UNIT WAS SHIPPED IN (4) SECTIONS. 13. UPDATED UNIT SECTION WEIGHTS. CHG'S PER C.O. #11782
B.	5/20/11	I.J.	1. UNIT CONSTRUCTION NOTE 7 - ONLY CERTAIN SECTIONS WERE SHIPPED KNOCK DOWN. 2. MAX. OPENING SIZE WAS 121H X 132W. 3. DISCONNECTS WERE 60 HP. 4. SPW NEMA ENCLOSURE(S) WAS 12. CHG'S PER C.O. #11958

BUFFALO
AIR HANDLING

Air Handling Unit Information

Sales Order: 100111-01 Dwg. No.: E-11498-1

Job Order: 11498 Revision: C

Data Sheets

AC2000 Data Sheets, Version 6.00

C.	7/6/11	M.C.	1. ADDED MISC. NOTES 3 & 4. PER C.O. 12020

E-11498-1

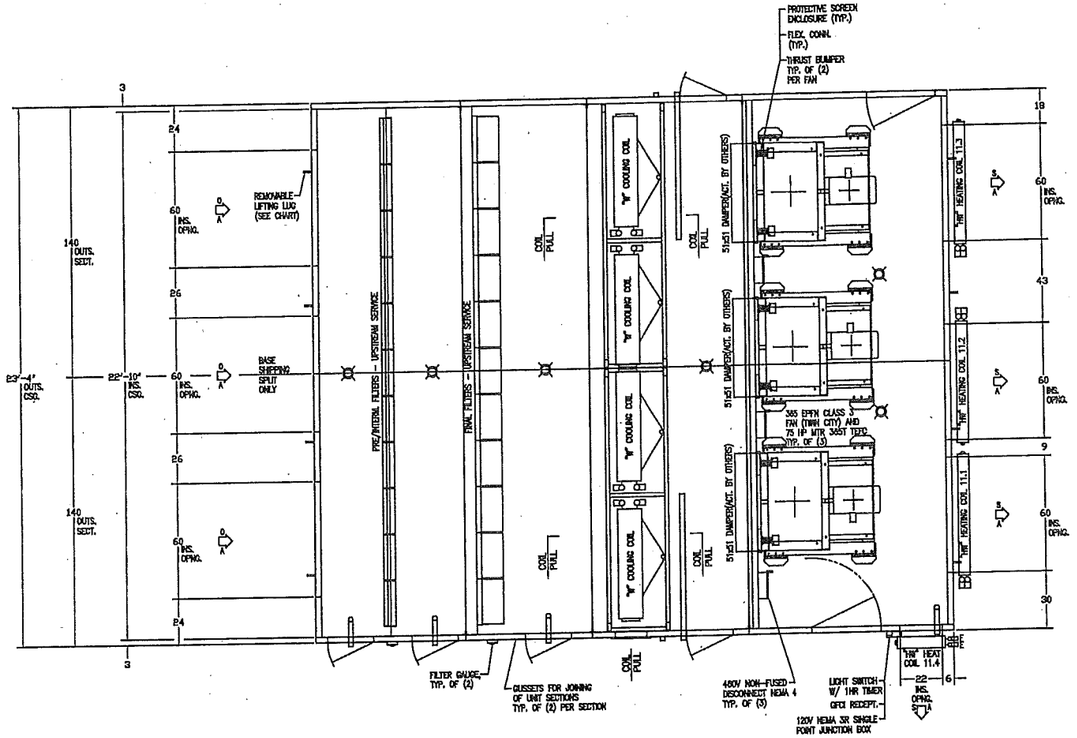

THE ENCLOSED DRAWINGS/DATA ARE SUBMITTED FOR APPROVAL. AN EXPEDIENT RETURN OF THESE DRAWINGS IS REQUIRED TO MEET THE QUOTED LEAD TIME FOR MANUFACTURE AND SHIPMENT OF THIS EQUIPMENT. REFER TO THE TRANSMITTAL NOTICE FOR REQUIRED RETURN DATE AND CORRESPONDING SHIP DATE. THE DRAWINGS SHOULD BE RETURNED TO THE BUFFALO AIR HANDLING SALES OFFICE WITH WHOM YOUR ORDER IS PLACED.

FINAL RECORD DRAWINGS WILL BE PREPARED UPON RETURN OF DRAWINGS MARKED "APPROVED" OR "APPROVED AS NOTED" WITH ALL CHANGES MARKED IN RED ALONG WITH YOUR RELEASE FOR FABRICATION. ANY REQUESTED CHANGES TO THE ORIGINAL SPECIFICATIONS WILL RESULT IN ADDITIONAL CHARGES AND SHIPMENT DELAY.

LIFTING LUGS	
SECTION	QTY
INLET	4
FINAL FILTER	4
COIL	4
S.A. FAN	4

COIL CONNECTIONS		
A	SUPPLY	2-1/2" MPT
B	RETURN	2-1/2" MPT
C	VENT	3/8" MPT
D	DRAIN	3/8" MPT
E	SUPPLY	1-1/2" MPT
F	RETURN	1-1/2" MPT

NOTES:
1. UNIT TO HAVE THERMAL BREAK CONSTRUCTION.
2. UNIT TO HAVE ETL LABEL.
3.
4. ALL ACCESS DOORS SHALL BE PROVIDED WITH A PADLOCKABLE HASP TO ALLOW DOORS TO BE LOCKED WITH AN EXTERNAL PADLOCK.
5. UNIT PIECES TO FIT THROUGH 96"W X 85"H OPENING. THE UNIT WILL BE COMPLETE KNOCK DOWN CONSTRUCTION, WITH PARTS AND COMPONENTS SHIPPED ON SECTION BASES AND PALLETS AS REQUIRED.
6. THE COOLING COIL DRAIN PAN CONDENSATE CONNECTIONS MUST BE PROVIDED ON BOTH SIDES OF THE UNIT DUE TO THE SPLIT IN THE CHANNEL BASE RUNNING THE LENGTH OF THE UNIT. J.MOORE & Co. HAS STATED THAT THEY WILL PROVIDED A FLOOR DRAIN ON BOTH SIDES OF THE UNIT.
7. THE COOLING COIL PIPING IS TO BE PROVIDED BY J.MOORE & Co. AND THEY WILL PROVIDE THE PIPING DETAIL DRAWINGS.

UNIT MUST BE INSTALLED AND OPERATED IN ACCORDANCE WITH MANUAL GB75G.

ENGINEER: RG WANDERMOR/JAY-NJ PORT AUTHORITY
MARK: AHU-11

GENERAL NOTES:
- UNIT MUST BE INSTALLED AND OPERATED IN ACCORDANCE WITH BUFFALO MANUAL GB29A.
- WHEN FANGS IN IN OPERATION, INLET OR OUTLET DAMPER(S) MUST BE OPEN TO PREVENT DAMAGE TO THE UNIT.
- UNIT TO BE INSTALLED ON LEVEL SURFACE.
- CEILING/RAIL MOUNTED UNITS 10'-0" AND MORE MUST HAVE INTERMEDIATE SUPPORT AND SUPPORT BENEATH EACH SHIPPING SPLIT.
- CEILING/RAIL MOUNTED UNITS OVER 15'-0" MAY REQUIRE ADDITIONAL SUPPORT. CONSULT FACTORY.
- SECTIONS MAY DEFLECT DURING RIGGING. SUPPLEMENTARY SUPPORT BENEATH AT SHIPPING SPLITS WILL FACILITATE REALIGNMENT OF SECTIONS.
- TRAPPING IN DRAIN LINES BY OTHERS. REFER TO TRAP DETAIL (RIGHT)

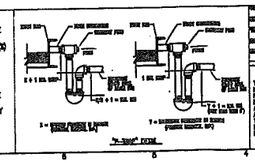

CUSTOMER:	J MOORE & CO. LIVINGSTON, NJ
JOB:	NEWARK AIRPORT
UNIT:	67 BB MAIN ASSEMBLY
DRAWN: M.S.	APPROVAL:
DATE: 11-2-10	
SCALE: 1/4"=1"	

BUFFALO AIR HANDLING

T00111-01

E-11498-1 C

11498

DWG. NO. C-11498-2

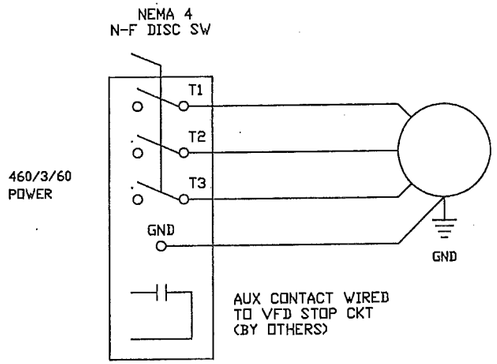

FAN MOTOR
75 HP 1800 RPM
460/3/60

120/1/60
POWER
(BY OTHERS)

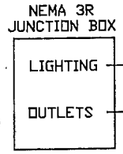

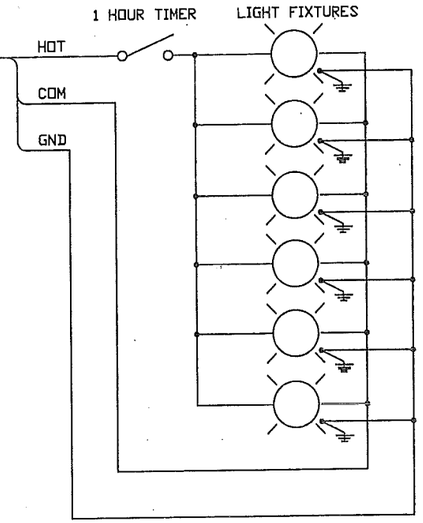

UNIT INLET/PRE FILTER SECTION

PRE FILTER/FINAL FILTER SECTION

FINAL FILTER/COOLING COIL SECTION

COOLING COIL/FAN INLETS SECTION

SUPPLY FANS SECTION

SUPPLY FANS SECTION

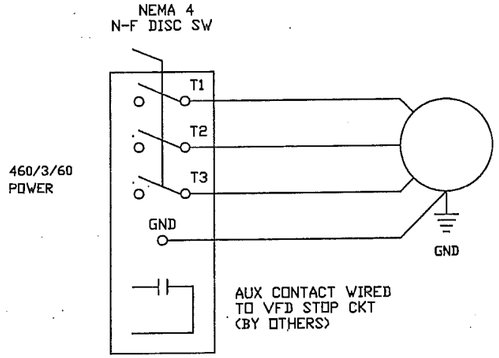

FAN MOTOR
75 HP 1800 RPM
460/3/60

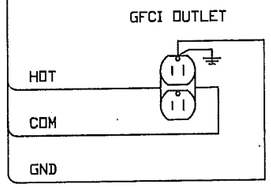

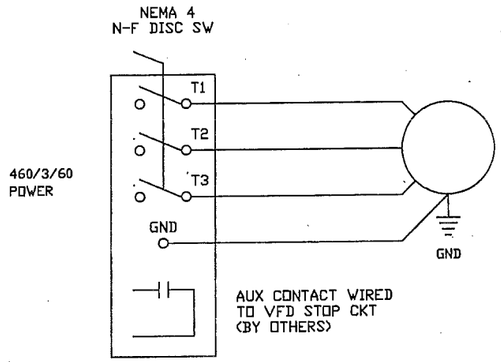

FAN MOTOR
75 HP 1800 RPM
460/3/60

NOTES
WIRE TO BE MINIMUN AWG #12 TYPE THWN, THHN OR MTW STRANDED COPPER
CONDUIT TO BE EMT WITH MAX 36" FLEXIBLE AT MOTORS
PROVIDE SEPARATE EQUIPMENT GROUNDING CONDUCTOR IN EACH SYSTEM CIRCUIT
WIRES TO BE MARKED BOTH ENDS WITH STICK ON MARKERS
75 HP MOTOR WITING TO BE MINIMUM AWG #1 IN 1-1/2" CONDUIT

-01	ITEM NO	DESCRIPTION	MODEL NUMBER	MANUFACTURER
	16			
	15			
	14			
	13			
	12			
	11			
1	10	NEMA 12 J/B (120V SPW)	A-80BCH	HOFFMAN
6	9	100W BULB	100A120	G. E.
6	8	LIGHT FIXTURE	VX200DG	RAB
2	7	BOX FOR SW'S & OUTLET	TP7074	CROUSE HINDS
1	6	COVER FOR OUTLET	TP7240	CROUSE HINDS
1	5	GFCI OUTLET	2095 (20A)	P & S
1	4	WP TIMER COVER	WP1110C	INTERMATIC
1	3	1 HOUR TIMER SWITCH	FF60MC	INTERMATIC
3	2	AUX CONTACT KIT	THAUX64D	G. E.
3	1	NEMA 4 NF DISC SWITCH	THN3364SS, 200A, 600V	G. E.

BILL OF MATERIAL

FIRST USED ON ORDER –

CUSTOMER: J MOORE & COMPANY, LIVINGSTON, NJ
USER: NEWARK AIRPORT
TITLE: WIRING DIAGRAM FOR AHU-11
NAME: G.E.K.
DATE: 01/05/11
DRAWN | DWG. STATUS | CHECKED | APPROVED
SCALE: NONE

THIS DRAWING IS THE PROPERTY OF BUFFALO AIR HANDLING AND IS RETURNABLE UPON REQUEST. IT IS FOR THE CONFIDENTIAL USE OF THE BUYER OF THIS EQUIPMENT AND MUST NOT BE COPIED, OR SHOWN TO ANY THIRD PARTY, WITHOUT PRIOR WRITTEN AUTHORIZATION OF BUFFALO AIR HANDLING. THE USE OF THIS DRAWING IN WHOLE OR IN PART FOR PROCURING PARTS FROM OTHERS IS PROHIBITED AND VOIDS OUR EQUIPMENT WARRANTY.

THIRD ANGLE PROJECTION
NEXT ASSEMBLY NO.
ID. NO. 100111-01
JOB NO. 11498

BUFFALO AIR HANDLING

DWG. NO. C-11498-2
REV.

REV.

21 20 19 18 17 16 15 14 13 12 11 10 9 8 7 6 5 4 3 2 1

Q P N M L K J H G F E D C B A

ES-1245

INTERIOR

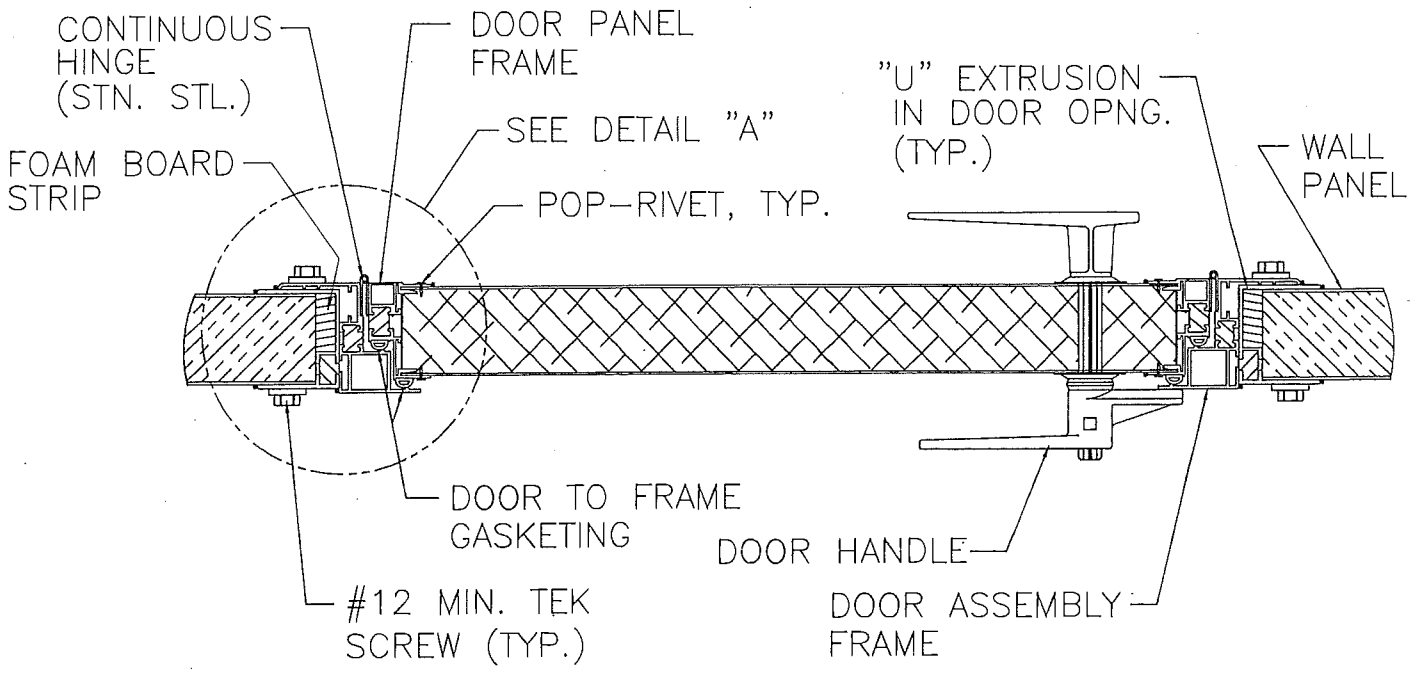

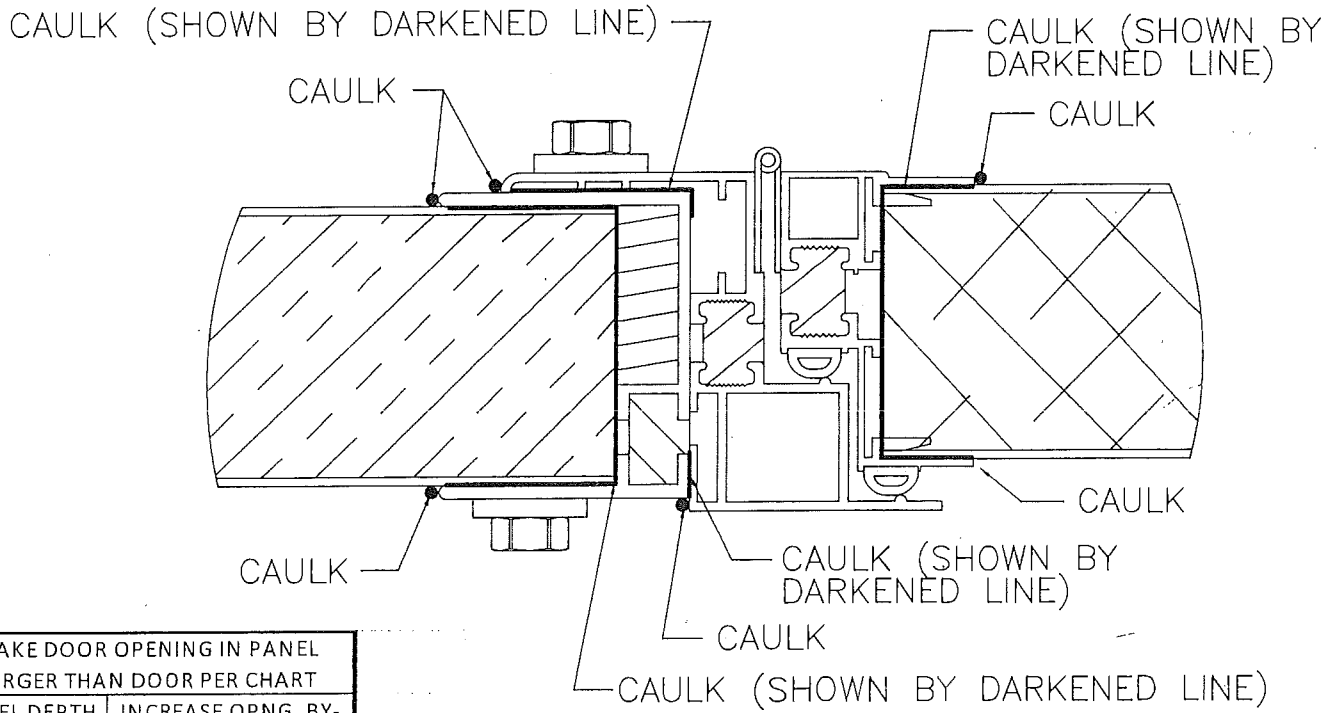

DETAIL "A"

MAKE DOOR OPENING IN PANEL LARGER THAN DOOR PER CHART	
PANEL DEPTH	INCREASE OPNG. BY-
2"	1"
2-1/2"	1-1/4"
3"	1-1/4"

REV.	DESCRIPTION	BY	JOB.
A	1. CHANGED TITLE BL		0

This drawing is the property of Buffalo Air Handling and is returnable upon request. It is for the confidential use of the buyer of the equipment and must not be reproduced, or shown to any third party, without prior written authorization of Buffalo Air Handling.

REFERENCE: –

TITLE: BLOW-THRU DOOR INSTALLATION

DRAWING STATUS	DESIGNER:	APPROVED BY:
COMPLETE	PHK/EKA	TRK
	DATE: 12/01/08	PAGE: 1 of 1

BUFFALO AIR HANDLING

DRAWING NO. (REF. JO#): ES-1245

REV.: A

BUFFALO
AIR HANDLING

BUFFALO AIR HANDLING UNIT SERVICE MANUAL

WARNING

IMPROPERLY INSTALLED OR OPERATED EQUIPMENT CAN BE DANGEROUS AND MAY CAUSE INJURY. IT IS YOUR RESPONSIBILITY TO FAMILIARIZE YOURSELF WITH THE CONTENTS OF THIS MANUAL AS WELL AS OTHER WRITTEN MATERIAL SHIPPED WITH THIS FAN BEFORE IT IS OPERATED. KEEP UNAUTHORIZED PERSONNEL AWAY FROM THE FAN.

INDEX

1.0 Introduction 1
2.0 Representative/Equipment Information 2
3.0 Shipping & Receiving 4
4.0 Handling 4
5.0 Storage 4
6.0 Foundations 4
7.0 Installation and Assembly 5
8.0 Safety and Operation 8
9.0 Motors 9
10.0 V-Belt Drives 10
11.0 Bearings 10
12.0 Coils 12
13.0 Filters and Dampers 13
14.0 Preventative Maintenance & Lubrication ... 13
15.0 Ordering Spare Parts 15
16.0 Warranty 16
17.0 Cleanliness 16

1.0 INTRODUCTION

This manual provides information necessary to install, operate, and service Buffalo Air Handling units. Maintenance guidelines and procedures are set so that your equipment will continue to efficiently and safely operate with minimum repair or replacement.

An assembly drawing containing all pertinent data and dimensions for your particular equipment has been supplied with your order.

You may find it helpful to have the catalog pertaining to your particular air handling unit. These may be obtained through your nearest Buffalo sales representative or by writing directly to the factory.

- ***IT IS STRONGLY ADVISED THAT AN EXPERIENCED ERECTOR SUPERVISE THE INSTALLATION OF THE EQUIPMENT.***

Servicemen are available by arrangement through any Buffalo sales representative. Products must be used in accordance with the information specified in this manual and cabinet assembly drawings.

Regular inspections must be made to warrant safe equipment operation. Strict compliance with all safety and maintenance procedures are the responsibility of the user and are necessary for safe and efficient operation. Failure to follow these installation operating and maintenance procedures can result in accidents endangering personnel or equipment.

2.0 CONTACT / EQUIPMENT INFORMATION

2.1 REPRESENTATIVE INFORMATION

It is recommended that the following information be recorded for future inquiries regarding your air handling equipment.

Buffalo Air Handling
Sales Representative _____

Address _____

Telephone (_____)_____

Fax (_____)_____

2.2 EQUIPMENT INFORMATION

When contacting your Buffalo sales representative, please have your assembly drawing and data sheets readily available for possible questions that he or she may have. The following information should be recorded in this manual for quick referral if the assembly drawing or data sheets are not available. This information can be found on a nameplate mounted on the outside of the air handling unit.

Buffalo Air Handling
Shop Order Number _____

Size _____

V-Belt Drive Type _____ Qty. & Size of Belts_____

Motor Sheave Size _____ Bore _____ Kwy_____

Fan Sheave Size_____ Bore _____ Kwy_____

NOTES

#SMPP010

START-UP PROCEDURES
BUFFALO AIR HANDLING UNITS
PRE-START UP CHECKLIST AND SERVICE REQUEST

Use this form to check for proper installation of Buffalo Air Handling units. If prepaid start-up service was ordered as part of the Air Handling order, return this completed form to your local Buffalo Air Handling Sales Representative to schedule start-up. If start-up service was not ordered, but is desired, contact your local Buffalo Air Handling Sales Representative for a quotation and then return this completed form with purchase order to schedule the start-up. Please allow 3 – 4 weeks for start-up service.

Job Name _____ Installing Contractor _____

Street _____ Contractor Contact _____

City _____ Phone _____

PRE-START UP CHECKLIST

Before attempting to start-up the Air Handling Unit, confirm that the following actions have been completed (or will be completed prior to scheduled start-up). Refer to Buffalo Air Handling Service Manual G-875-G.

		YES	NO
1.	Unit installed on Support structure, leveled and shimmed.	☐	☐
2.	Proper assembly of unit and proper sealing of all shipping splits (welded or bolted)	☐	☐
3.	If units supplied with inertia bases, has concrete been poured in base?	☐	☐
4.	Release all shipping hold down devices.	☐	☐
5.	Has ductwork been installed so fan can be run?	☐	☐
6.	Check for proper clearance of all rotating components and adjust as required.	☐	☐
7.	Check bearings for proper lubrication, cleanliness, moisture, alignment locking and clearances.	☐	☐
8.	Align all drive components.	☐	☐
9.	Check motor rotation.	☐	☐
10.	Has power been brought to unit (fan, lights, etc.)?	☐	☐
11.	Have filters been installed in units.	☐	☐
12.	Are the VIV's and damper operators operational?	☐	☐
13.	Have VFD's been started, checked and parameters set. Air balance and control done?	☐	☐
14.	Has unit been cleaned out including coils and drain pans?	☐	☐

Note: In the event service is purchased from Buffalo Air Handling, customer can disregard items 6, 7, and 8. These will be done by Buffalo Air Handling service technician.

REQUEST FOR SERVICE TECHNICIAN

I acknowledge that all of the above items have been completed. I understand that if upon job inspection these requirements are not met, no start-up work will be performed and travel time and expenses will be charged at current hourly rates.

Name: _____ Company _____ Date _____

3.0 SHIPPING & RECEIVING

Standard terms of sale shipments are F.O.B. factory with shipping and handling allowed or not allowed as stated in the proposal. Therefore, it is to the interest of the buyer to carefully inspect all shipments before they are accepted from the carrier. Upon delivery, be sure that all items listed on the bill have been received. (Partial shipments are often made.)

Even though all equipment is carefully inspected and prepared for shipment at the factory, rough handling en route may cause damage to the fan and drive parts.

Any shortage, breakage, or damage noticed at time of delivery must be indicated on the carrier's freight bill and signed by the driver or carrier's representative.

4.0 HANDLING

When lifting our air handling units with a hook at a single point, a lifting rig with spreader bars, shown in Figure 1, are required. This rig must be furnished by contractor.

● *SPREADER BARS ARE ESSENTIAL TO PREVENT CRUSHING OF THE UNIT'S SIDES.*

Air handling units must be lifted vertically, on a level plane, to prevent distortion and stress on the components.

Maximum shipping dimensions may necessitate the substitution of removable lifting lugs (optional). Lugs and hardware will be shipped loose for field installation. Lugs may be removed after lifting unit into position.

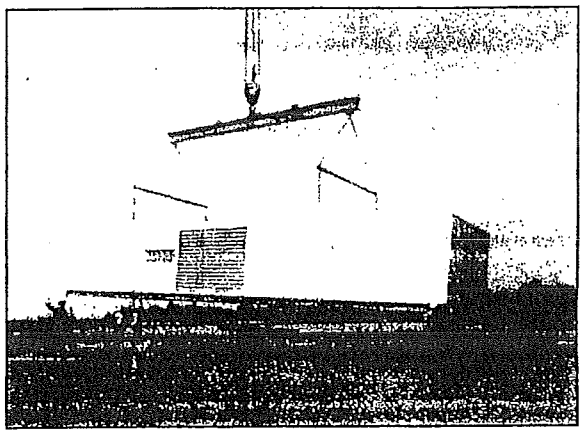

Figure 1. Proper Rigging.

5.0 STORAGE

● *STORE AIR HANDLING UNIT IN A DRY AND PROTECTED AREA, TO ENSURE THAT THE FAN COMPONENT'S SHAFT, BEARINGS, AND WHEEL ARE SHIELDED AGAINST DUST AND CORROSION.*

If it is necessary to store outdoors, special care must be taken to prevent moisture, corrosion, dust, or dirt accumulation. Coat the fan shaft with grease or rust preventive compound. Cover and seal bearings to prevent entrance of contaminants. The fan and motor shafts must be rotated every two weeks. Flexible plastic is suggested for covering. Use tarp or weatherproof paper to cover the exterior of the cabinet.

WARNING: EXTRA CAUTION MUST BE TAKEN TO PREVENT INTERNAL MOISTURE DAMAGE TO THE BEARINGS. IF AIR HANDLING UNITS ARE TO BE IN STORAGE OUTSIDE, THE FAN BEARINGS SHOULD BE COMPLETELY FILLED WITH GREASE. AFTER REMOVAL FROM STORAGE THE EXCESS GREASE MUST BE REMOVED AND PROPERLY RE-GREASED (Refer to Sections 11.3 and 11.6).

Also, care should be taken in the treatment of cooling and/or heating coils. Condensate or rain water moisture may lead to freezing, resulting in damage to the coils. If ıge is required, coils should be charged with nitrogen (optional).

6.0 FOUNDATIONS

A rigid level foundation is a must for every air handling unit. It assures permanent alignment of fan and driving equipment and freedom from excessive vibration, minimizing maintenance costs.

1. Floor mounted units, regardless of unit type or arrangement, are to be mounted on a level concrete floor pad. Pad to be sufficient height to allow for P-trap removal of condensate from unit drain pan. (Refer to Section 7.8).
2. Ceiling Mounted Units - *Small size units* can be suspended from structural supports using hanger rods supplied by others. *Larger size units* can only be suspended using a structural platform. For this type of installation, the platform must be rigid and level to assure permanent alignment of fan and coil section. It must be designed to carry the weight of the equipment with minimum deflection, plus the load imposed by the centrifugal forces set up by the rotating element.

3. Vibration Isolation - Rubber in shear or spring isolators (See Figure 2) may be provided to separate the vibration of rotating elements from the structure. Isolators for ceiling mounted units should be located between hanger rods and the air handling unit. Floor/platform mounted units may have internal (fan mounted on isolators in the unit) or external (below unit base) vibration isolators. When external vibration isolation is used, sheet metal, piping, and electrical flexible connectors must be installed by the installer. Internally isolated fans are secured for shipment with tie down bolts and shims.

● ***SHIPPING TIE DOWN BOLTS AND SHIMS MUST BE REMOVED BEFORE START-UP.***

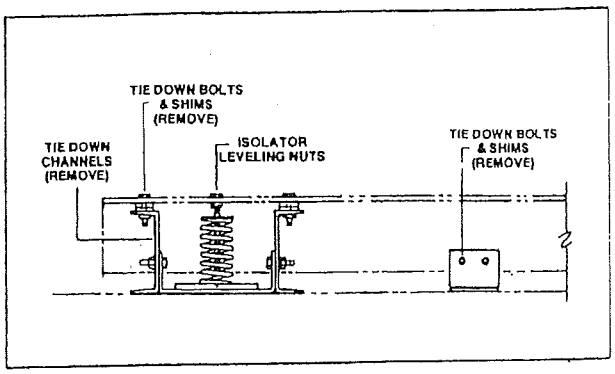

Figure 2. Tie-Down Bolts and Shims. (typical)

7.0 INSTALLATION

7.1 GENERAL

All air handling units are assembled with a test run at the factory. Units are shipped in either full, modular, or knocked down (special order) assemblies. Adjoining parts are numbered or lettered for easy field assembly. Gaskets, caulking, or sealers are furnished for use at the field assembly of joints. Omission of gasketing will cause leakage and improper alignment of the cabinet.

7.2 UNIT ASSEMBLY

Figure 3 on the following page illustrates a typical double-wall cabinet construction with a shipping split. The following assembly procedure is recommended:

1. Before removing shipping protection, complete unit should be moved into its proper location.
2. Blower section's motor and drive, if not factory mounted, should be mounted in place. Final alignment and adjustment of drive will be required before start-up. (Refer to Sections 10.0 and 11.0).
3. Coil Sections should be handled with care to prevent damage to the finned surface and piping connection. Internally piped units may have pipe supports that require removal prior to its installation.
4. Accessory sections, such as filter, damper, access, and humidifier sections may require field joining.

7.3 FAN ALIGNMENT

Fan has been aligned and balanced, at the factory.

● ***ALIGNMENT MUST BE CHECKED BECAUSE SHIPPING CAN ALTER FACTORY ALIGNMENT.***

To check alignment after shipment, spin wheel slowly by hand to see if fan wheel clears the fan inlets. It may be necessary to loosen wheel hub set screws and shift the wheel on the shaft to locate the wheel properly with the inlets. In most cases, the lip of the inlet bell or inlet cone should be even with or slightly extended into the wheel inlet. Generally, wheel-inlet bells are fitted for 70°F air as shown in Figure 4. However, consult with your Buffalo sales representative for proper lip alignment. (Refer to Section 8.1).

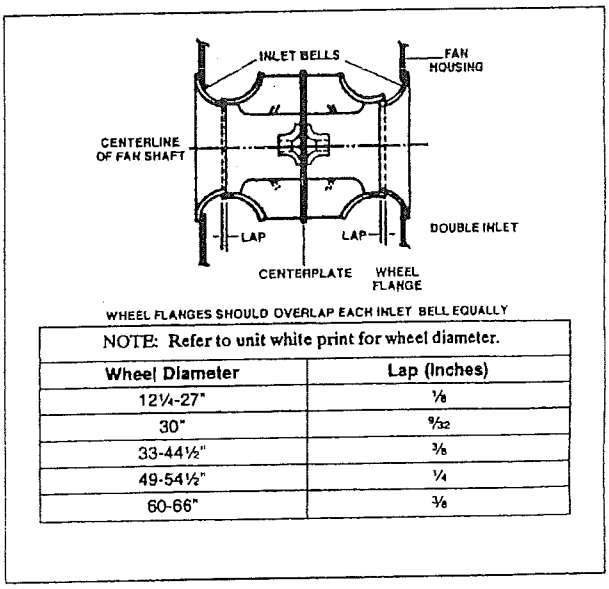

NOTE: Refer to unit white print for wheel diameter.

Wheel Diameter	Lap (Inches)
12¼-27"	⅛
30"	9/32
33-44½"	⅜
49-54½"	¼
60-66"	⅜

Figure 4. General Wheel-Inlet Bell Fits. (typical)

7.4 WATER COILS

Connection of the water coils to the unit system is by others. Refer to the unit drawing and instructions on the cabinet for correct orientation of the external piping.

7.5 DIRECT EXPANSION COILS

Connection of the direct expansion coils to the unit system is by others. Refer to the unit drawing and the instruction on the cabinet for correct orientation of the external piping.

Direct expansion coils require an expansion valve to be provided by others. Coil distributor has a factory sized orifice mounted on the coil.

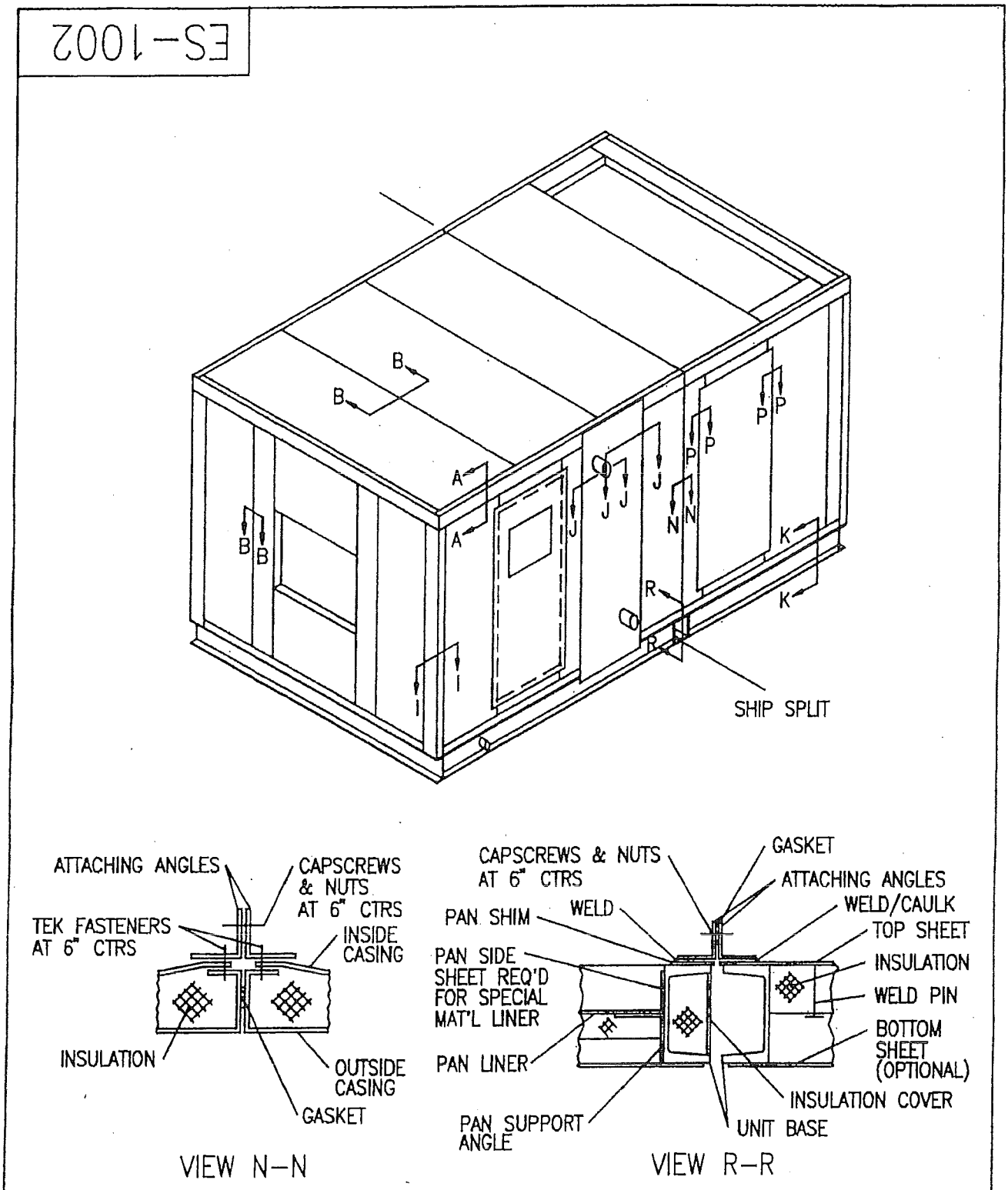

Figure 3. Air Handling Unit with Shipping Split.

7.6 STEAM COILS

Connection of steam coils to the steam system is by others. Refer to ASHRAE Fundamentals Guide for piping procedures. These general precautions are:

1. Make the supply pipe size and return pipe size the same as the coil connections.
2. Condensate should not be raised above coil return into overhead main or drain into mains under pressure except in step 3.
3. A pump and receiver or boiler return trap should be installed between coil condensate traps and overhead & return mains under pressure.
4. Provide all coils with proper air vents to eliminate non-condensate gases.
5. Steam piping should not be supported from steam coil. Both mains and coil should be supported separately.
6. Be sure piping is pitched to facilitate drainage of the coil.

7.7 ELECTRIC HEATING COILS

Electric coils are specifically designed to heat the air per customers specifications.

1. Full air flow over the electric coil must be continuously maintained without blockage of any part of the heating elements.
2. Do not operate below the design velocity.
3. The coil must be electrically interlocked with the fan to ensure that the fan is operating before the coil is energized.
4. For safe operation, make sure that no condensate or spray water is carried onto the electric coil.
5. The electric coil is installed similarly to the steam coil except for the extension of the terminal box from the unit side. Slide the electric coil into the unit so that the back of the terminal box is in contact with the unit side as shown in Figure 5. Attach the back of the terminal box to the unit side with sheet metal screws. Consult the unit drawings for details.

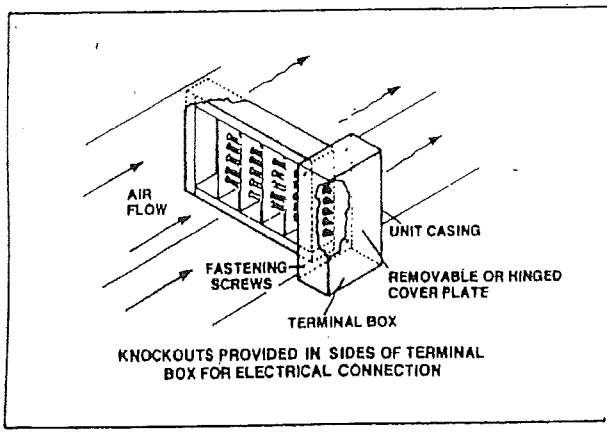

Figure 5. Electric Coil Installation.

7.8 CONDENSATE DRAIN CONNECTION AT PANS

External piping, including a trap for condensate, is required and furnished by others. To insure proper operation of an air handling cabinet and prevent property damage to a building, condensation from cooling coils must be collected in a drain pan and then carried away through the drain line. Improper sizing, trapping, or pitch are common causes of property damage. Refer to Figure 6 and 7 for correct drainage of condensate water.

Unit may require elevation on house keeping pad, roof curb, or structural steel.

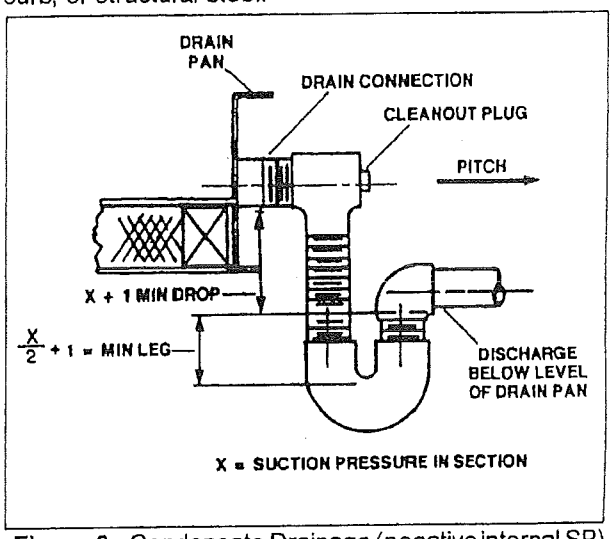

Figure 6. Condensate Drainage (negative internal SP) for Draw-Through Unit.

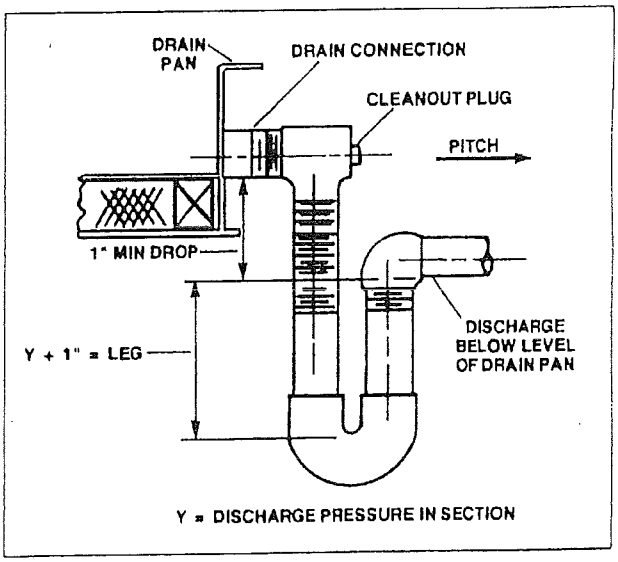

Figure 7. Condensate Drainage (positive internal SP) for Blow-Through Unit.

7.9 DAMPERS

Dampers are factory mounted and shipped as an integral part of the air handling unit. Damper motors are normally furnished by the temperature control contractor. However, in some cases, the damper motor may be supplied by the manufacturer.

1. When damper motors are furnished by the manufacturer, they are mounted on a rigid base and damper linkage is installed.

   ● *FINAL ADJUSTMENT OF LINKAGE IS TO BE DONE BY TEMPERATURE CONTROL CONTRACTOR*

2. Damper motors, furnished by others, should be mounted on a rigid base. Do not mount on sheet metal that is not reinforced. Final adjustment of the damper linkage is to be performed by a temperature control contractor.

7.10 FILTER BOX AND FILTER CELLS

Filter boxes are manufactured in the factory to receive the filters. Filters are furnished when specified. When filters are specified, the filters, filter media, and hardware are packaged and shipped separately.

On side service panel filter boxes, it may be necessary to make a slight adjustment to the blank-off sheet. Filter service door will have a filter installation diagram.

7.11 FLEXIBLE CONNECTIONS

All equipment mounted on vibration isolators requires flexible connections. Internally isolated fans will have a factory mounted fan discharge flexible connection. Externally isolated sections require field mounted flexible connections into and out of the section. External flexible connections are furnished by others and are to be field fitted and mounted.

7.12 OPTIONAL ACCESSORIES

Optional accessories may include: humidifiers, roll filters, blenders, heat wheels, heat pipes, face & by-pass steam coils, motor starters, electrical controls, terminal boxes, junction boxes, internal lights, external lights, access platforms, railing, etc.

8.0 SAFETY AND OPERATION

8.1 BEFORE START-UP

Improperly installed or operated air handling unit is a hazard to both people and property. They must be installed by trained and experienced personnel. Installation must meet all pertinent state and local safety codes and Occupational Safety and Health Act (OSHA).

1. ● *FASTENINGS, ALL BOLTS, WHEEL HUB SET SCREWS, AND BEARING LOCKING COLLARS MUST BE CHECKED FOR TIGHTNESS.*
2. Bearings must be checked for alignment and make certain they are properly lubricated. Refer to sections 11.0 and 14.0.
3. Fan Wheel should be turned over by hand to see that it runs free and does not strike fan housing. If wheel strikes housing, the wheel may have to be moved on the shaft or the bearing pillow blocks moved and re-shimmed. Check location of wheel in relation to fan inlets. Be sure fan housing is not distorted. (Refer to Sections 7.2 and 7.3).
4. Fan Motor and wiring should be inspected.
5. V-belt Drive must be in alignment with belts at proper tension. Use a tension tester. Refer to Section 9.0.
6. All duct joints should be sealed to prevent air leaks. All debris should be removed from duct work, fan, and cabinet. Where feasible, access doors should be provided in the inlet and outlet ducts of the unit for servicing.
7. Dampers and VIV's should operate freely and blades closed tightly. Adjust linkage to close any open blades. VIV's should be partially closed during starting periods to reduce power requirements.

   NEVER CLOSE AN INLET DAMPER WHEN THE FAN IS RUNNING.

8. Coil and Accessory Sections require functional testing of mixing boxes, dampers, filters, drain, spray nozzles, piping, and pumping apparatus.
9. Access doors must be secured.
10. When required by unit operation and maintenance procedures, belt guards, shaft guards, and inlet screens are available from the factory. Insure that all guards are in place.

8.2 START-UP

1. Bump the fan motor to check for proper wheel rotation. The drive should be started in accordance with the manufacturer's recommendations.
2. The fan may now be brought up to speed. Watch for anything unusual, such as vibration, over-heating of bearings, motors, etc. Multi-speed motors should be started at the lowest speed and run at a high speed only after satisfactory slow speed operation. Check fan speed on V-belt driven units.

   ● *DO NOT EXCEED RPM SHOWN ON THE EQUIPMENT SUBMITTAL DATA SHEETS.*

3. At first indication of trouble or excessive vibration, shut down the fan and check for the source of the problem. (Refer to AMCA Standard 204-96, table 6.4, for guidance).

8.3 VARIABLE INLET VANES

Variable inlet vanes, VIV, regulate fan capacity through moveable vanes in the fan inlet. A linkage joins all vanes together, causing them to operate in unison when moving the control lever. The VIV is completely assembled and adjusted for proper operation at the factory. When the VIV is installed at the job site, make sure that the vanes will spin the air in the same direction as the wheel rotates.

Operate the control lever to ensure that the vanes move easily from open to closed positions. VIVs operated manually have a wing nut which locks the control lever in position on the quadrant. Automatic operation is accomplished by connecting a suitable control device to the VIV control lever.

On some fans, in order to limit the horsepower, a stop is used to control the maximum open position.
Do not remove this stop. Figure 8 illustrates a typical VIV. VIV's are serviced by removing the entire assembly.

8.4 ADJUSTABLE MOTOR BASE

Adjustable motor base facilitates tension adjustment of V-belt drive. Tension in V-belt drive should be checked before operation and periodically after initial operation.

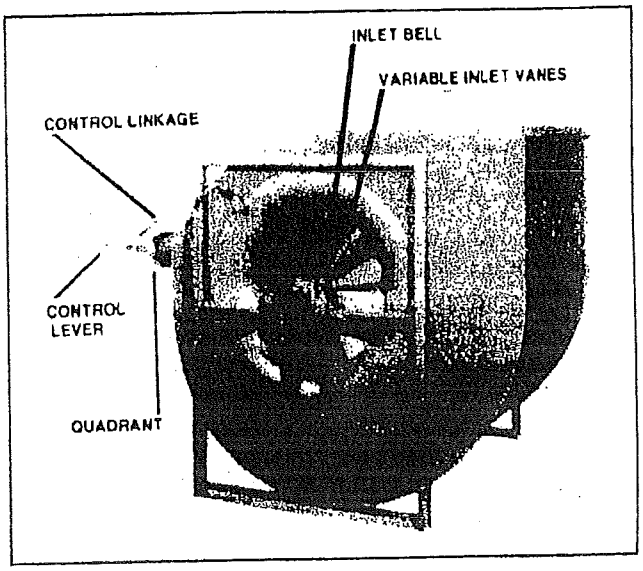

Figure 8. VIV Assembly.

9.0 MOTORS

After the motor has been mounted, aligned, and bolted down, wire to power supply through a disconnect switch, short circuit protection, and suitable magnetic starter with overload protection. All motors should be connected as shown on nameplate. Install all wiring and fusing in accordance with the National Electric Code and local requirements. Ensure that the power supply (voltage, frequency, and current carrying capacity of wires) is in accordance with the motor nameplate. Motors are received with bearings lubricated and require infrequent lubrication. Refer to the motor manufacturer, for lubrication.

9.1 TO REVERSE DIRECTION OF ROTATION

9.1.1 Single Phase Motors

Capacitor motors are reversed in rotation by interchanging connections to supply either the main or auxiliary winding.

9.1.2 Three Phase Motors

For three phase motors, interchange any two line leads. Normal operation of motors results in temperature rises according to motor insulation. The total motor operating temperature includes ambient temperature plus motor rise. The motor rise includes nameplate temperature rise, service factor allowance, and hot-spot allowance. The motor nameplate indicates the insulation class. The following is the maximum total operating temperature for each insulation class:

Insulation Class	°Fahrenheit	°Centigrade
A	221	105
B	266	130
F	311	155
H	356	180

9.2 MOTOR TROUBLESHOOTING

Various motor troubles can be caused by:

1. Low or high voltage.
2. Overload - high temperature - high amperage.
3. Armature unbalance - vibration and noise.
4. Worn bearings - armature rubs against stator.
5. Too much or not enough lubricant in bearings.
6. Commutator brushes on d-c motor worn or not seated under proper tension.
7. Loose hold down bolts - vibration and noise.
8. Dirt in windings - high temperature.
9. Low insulation resistance due to moisture - check resistance with megohm meter ("Megger") or similar instrument employing a 500 volt d-c potential. Resistance should read at least 1 megohm. If it is less, remove motor from service and send to a qualified motor repair shop.

10.0 V-BELT DRIVES

The V-belt drive is aligned at the factory before the cabinet is shipped. However, alignment must be rechecked prior to its operation.

V-belt drive assembly can be mounted as follows:

1. Clean the motor and fan shafts. Clean the bore of the sheaves and coat with a lubricant for ease of shaft entry.
2. Place fan sheave on the fan shaft and motor sheave on its shaft. Do not force the sheaves as this may damage bearings. Tighten the sheaves in place.
3. Move the motor on its slide base so the belts can be placed in the grooves of both sheaves without forcing. Do not roll belts or use a tool to force belts over the grooves.
4. Align the fan and motor shafts so they are parallel. The belts should be at right angles to the shafts. A straight edge or taut cord will aid in alignment.
5. Tighten the belts by sliding the motor on its base. Excessive tension causes undue bearing load.
6. Bump the fan and check motor rotation.
7. Start the fan and run at full speed.
8. Adjust the belt tension until only a slight bow appears on the slack side of the belts. If slippage occurs, an excessive squeal will be heard at start-up.
9. ● ***GIVE BELTS A FEW DAYS RUNNING TIME TO BECOME SEATED IN SHEAVE GROOVES - THEN READJUST BELT TENSION.***

NOTE: Belt tension on an adjustable pitch drive is obtained by moving the motor, not by changing the pitch diameter of the adjustable sheave.

11.0 BEARINGS

The fitting locations illustrated in Figure 9 are for air handling cabinets with centrifugal fans.

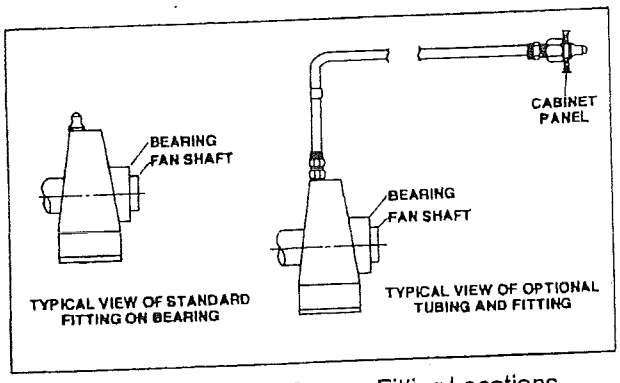

Figure 9. Cabinet Grease Fitting Locations.

11.1 CLEANING OF BEARINGS

Bearings removed from their shafts should be placed in a suitable container with a clean petroleum solvent and allowed to soak. Revolve each bearing by hand to help dislodge any dirt particles. All of the old grease and oil must be removed from bearing pillow block. A solvent may be used to clean. Sealed bearings cannot be cleaned and must be replaced if required.

11.2 BEARING LUBRICATION

● ***TO ENSURE SAFETY DURING RE-LUBRICATION, BE SURE THE DRIVE IS LOCKED OFF OR POWER IS DISCONNECTED FROM THE FAN MOTOR.***

IMPORTANT: It is recommended that only qualified personnel and proper equipment are used.

A good grade of lubricant is very important. Also, it is imperative to use the same product when re-lubricating the bearings because all greases are not chemically compatible.

Therefore, for the bearing lubricant used, refer to instructions on the fan housing label or fan manufacturer service manual. If neither can be located, contact your local Buffalo sales representative for the lubricant used.

Prior to the re-lubrication with a grease gun (adding of new grease), the fan should be in operation for at least two (2) hours to assure appropriate bearing and lubricant temperature.

NOTE: Just because a grease manufacturer states that a lubricant is good to a temperature (perhaps 350°F) does not mean the lubricant is suitable for bearing use. Bearings often require a SUS value of 70-100 at the operating temperature. Heaters can be used to raise the low temperatures into the correct operating range for a given lubricant.

NOTE: Motor bearings will often use a different lubricant than the fan. Refer to the motor manufacturer for recommendations.

11.3 GREASING PROCEDURE

Be careful to prevent any dirt from entering the bearing. Use a low-pressure gun. Fill the lower half housing with 1/3 to 1/2 full as well as packing the ring assembly housing the bearings with grease. Note that an excess amount of grease can cause bearings to overheat.

11.4 FREQUENCY OF RE-LUBRICATION

How often to re-lubricate can only be determined from your operating conditions. Determine the proper re-lubricant interval for your unit by setting up a schedule and visually examining the purged lubricant. If the lubricant is clean, lengthen the period between re-lubrications; if it is contaminated, shorten the interval. Refer to Table 2 for the recommended re-lubrication intervals.

Table 2. Bearing Re-lubrication Intervals.

Operating Condition		Operating Temperature	Grease Intervals
Dirt	Moisture	Degrees Fahrenheit	
Fairly Clean	None	35 to 120	6 to 12 Months
		120 to 160	1 to 12 Months
		160 to 200	1 to 4 Weeks
Moderate to Extremely Dirty	None	32 to 160	1 to 4 Weeks
		160 to 200	1 Week
Fairly Clean	Heavy Moisture & Direct Water Splash	32 to 200	1 Week

11.5 BEARING REPLACEMENT

1. Bearings should be inspected and thoroughly cleaned if necessary. If the bearing is disassembled, mark each part in relation to one another to avoid any error in re-assembly.
2. Note type of pillow block and location of the bearing.
3. Mount bearings in position on the shaft in accordance with the particular type of bearing furnished.
4. The shaft should be clean and free from burrs and other irregularities. Be sure bearing is not seated on worn flat sections.

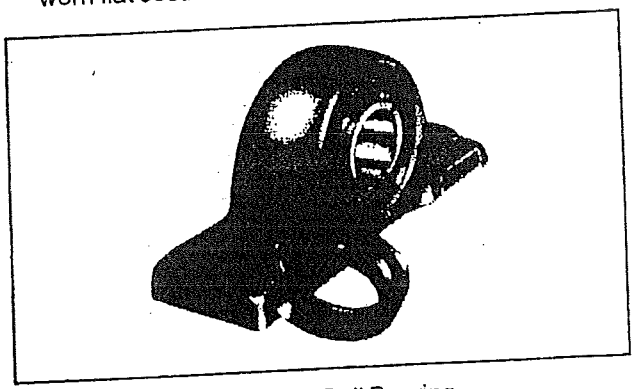

Figure 10. Ball Bearing.

11.5.1 Ball Bearing (See Figure 10)

1. This type of bearing is shipped assembled and ready for installation.
2. Slip each bearing pillow block and locking collar into position on the shaft.
3. Bolt pillow blocks in position on their mounting surfaces after shimming and aligning. They should be mounted so the fan wheel and shaft clear the fan housing.
4. Slide locking collar against end of inner ring. Turn collar in the direction of the shaft rotation until it grips the shaft and inner ring. Tighten the collar with a drift pin. Tighten all set screws or screws in collar.
5. To dismantle, reverse this procedure. Be sure to remove burr on shaft caused by set screw before removing pillow block from shaft. A honing stone will remove burr.

11.5.2 Spherical Roller Bearing (See Figure 11)

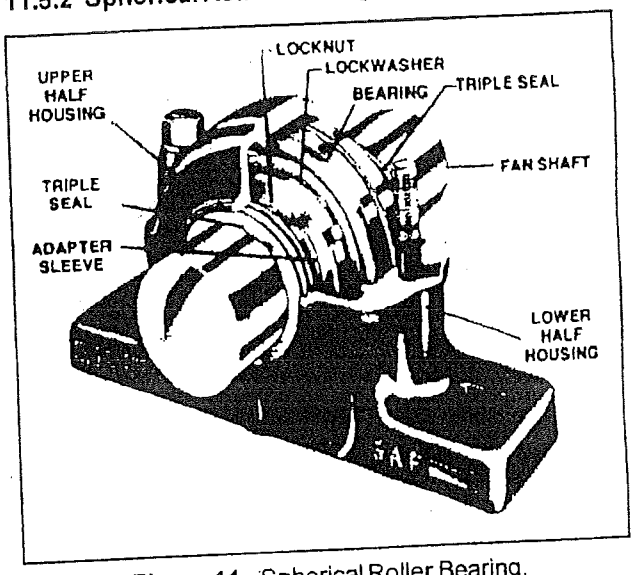

Figure 11. Spherical Roller Bearing.

The replacement of this type of bearing must be carefully installed per SKF procedures in order to obtain the correct bearing tolerances for proper operation. Contact your local Buffalo sales representative for this information.

11.6 Storage of Assembled Bearings

Equipment which is idle must be set in motion periodically in order to spread the lubricant over all bearing surfaces. Suitable intervals depend on ambient conditions. For storage of assembled bearings, they should be cleaned and packed full with petroleum or other suitable anti-rust agents.

● ***STORAGE GREASE MUST BE REMOVED THOROUGHLY AND THE PROPER AMOUNT OF A SUITABLE LUBRICANT APPLIED BEFORE OPERATION*** (Refer to Section 11.3).

12.0 COILS

12.1 HEATING AND COOLING COIL REMOVAL

Coils for the Air Handling Cabinet are mounted in cabinet section for horizontal air flow. When two or more coils are furnished, the larger coil is stacked on the bottom. To remove coil follow these steps:

1. Drain coil thoroughly and remove piping insulation adjacent to coils at side of cabinet.
2. Break threaded supply and return connections. Disconnect vent and drain fittings if present. For direct expansion coils, the inlet, and outlet connections are soldered or brazed.
3. Each coil bank has a separate removable side panel. Remove all fasteners and gaskets from the side panel. Remove any fasteners from internal cutoff sheets that would prevent coil removal.
4. Remove coil through the open side of cabinet. Do not lift or pull from the headers as damage may occur. Attach clamps or sling to the coil casing to remove coil.
5. When replacing coils reverse the above procedure.
6. Replace the gasket and reseal adjacent panels as required.

12.2 ELECTRIC COIL REMOVAL

Electric coils for Air Handling Cabinets are mounted in the cabinet section for horizontal air flow. The following steps should be followed Refer to Figure 12 and the following steps for the removal of this coil:

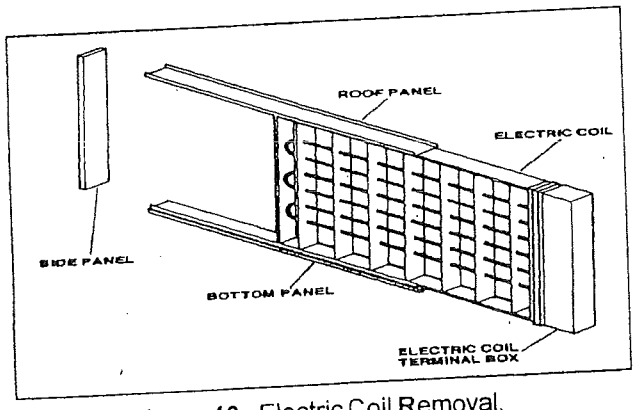

Figure 12. Electric Coil Removal.

1. Disconnect power to the unit from a remote location.
2. Remove the terminal box cover.
3. Remove all fasteners securing terminal box to unit side.
4. Remove all fasteners from internal cutoff sheets that would prevent coil removal.
5. Remove coil. Attach clamps or sling to the coil casing to remove coil.
6. When replacing the coil, reverse the above procedure.
7. Replace gasket. Reseal adjacent panels as required.

12.3 WATER COIL FLUSHING AND FREEZING PREVENTION

Water coils subject to freezing conditions, with the unit shut down, must be protected. There are three generally accepted methods of protection; blow all water from coil, flush coil with antifreeze, or use an antifreeze solution in the coil.

12.3.1 Equipment Required for Blowing Out Coils with Air

The blower recommended for this operation is the portable electric type commonly used on vacuum cleaners. The blower should supply 150 cfm at a static pressure of 45 inches of water. Do not use compressed air.

12.3.2 Procedure Using Air to Blow Down Coils

1. Shutoff the water supply.
2. Drain the coil, using vent and drain cocks provided. In Figure 13 and 14., this step would require opening of supply header vent or removing the plug from the supply header tee, and opening all drains.

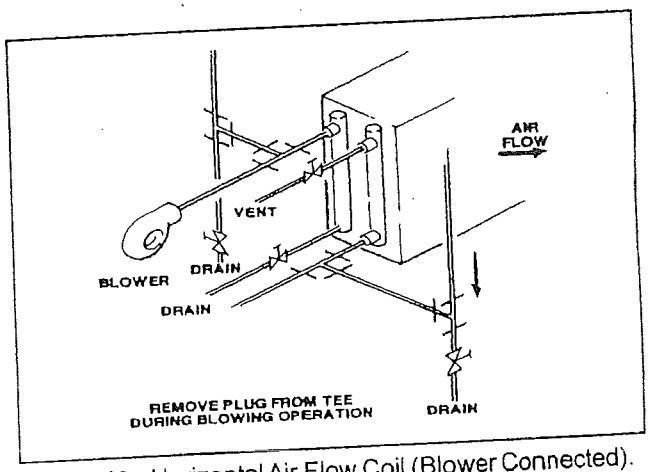

Figure 13. Horizontal Air Flow Coil (Blower Connected).

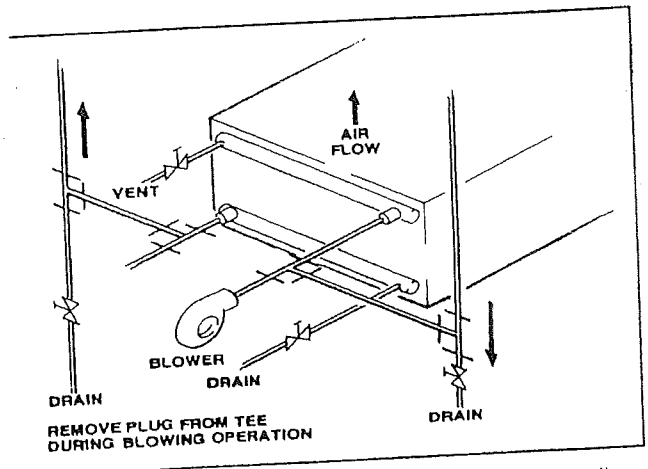

Figure 14. Vertical Air Flow Coil (Blower Connected).

3. Connect the blower to the coil supply or return header at a point where there will be no reduction in pipe size for the blower to the coil. In Figure 13, the blower is shown connected to the return header. Figure 14 shows the blower connected to the supply headers. Do not attempt to blow the coil by connecting the blower to the air vent.
4. Close all outlets on the header to which the blower is connected and remove the plug from the other header.
5. Operate the blower for one-half hour and then check coil for dryness.
6. Jar the coil slightly during the blowing operation. This will free any water which may be trapped and may also dislodge the dirt or scale which is trapping the water. Do not damage the coil in this process.
7. Allow the coil to stand for a few minutes after it is blown down to give the moisture that adhered to the walls of the tube a chance to accumulate. Blow it down again, and if any water comes out, repeat the blowing operation.
8. Leave all drains open.

12.3.3 Equipment Required to Flush Coils with Antifreeze

The required portable equipment consists of a one-inch centrifugal pump operating at a speed of approximately 3500 rpm and having a capacity of 25 gpm at a 35 ft. head.

There are several antifreeze solutions that can be used, the best of which are relatively expensive. Alcohol must not be used due to fumes and the hazard of fire.

12.3.4 Ethylene Glycol Coils

The use of an antifreeze/water solution as the circulating coolant should be incorporated at the equipment design phase. Coil performance is modified by the use of such a solution. The level of freeze protection is the responsibility of the system design engineer.

13.0 FILTERS AND DAMPERS

13.1 FILTERS

Replace or clean panel, cube, cartridge, or roll-type filters periodically as prescribed by the manufacturer.

13.2 DAMPERS

1. Dampers must be kept free of dirt or other foreign matter that may impede normal free movement. Linkage pivot points should be lubricated regularly. Axles rotate in sleeve bearings, which should not require any lubrication. It is recommended that all linkage joints be inspected periodically to insure tightness of set screws.
2. On multi-zone units, periodic checks should be made of bearings and axles to insure proper operation. Do not overlook the center bearings and axles (Refer to Figure 15).

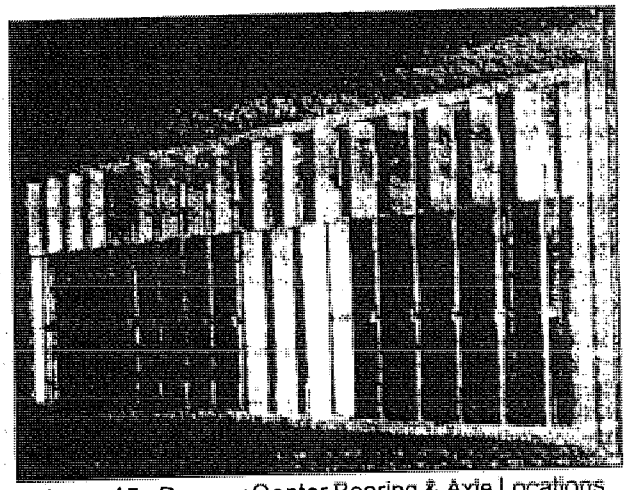

Figure 15. Damper Center Bearing & Axle Locations.

14.0 PREVENTATIVE MAINTENANCE AND LUBRICATION

14.1 GENERAL

Maintenance instructions will accompany the shipment of each air handling unit. All instructions and unit drawing should be kept for future reference. The following items are recommended to help maintain proper operation of the air handling unit:

1. A definite time schedule for inspecting all rotating parts should be established. The frequency of inspection depends on the severity of operation and the location of the equipment.
2. Fan bearing alignment should be checked at regular intervals. Misalignment can cause overheating, bearing failure and unbalance.

3. The fan bearing must be lubricated at regular intervals. Periodic inspections will be necessary. Refer to Section 11.4.

4. Bearings on high speed fans tend to run hot. Ball or roller bearing pillow blocks can have total temperatures of 180°F.

5. Foundation bolts and all set screws should be inspected for tightness.

6. Fans should be inspected for wear and dirt periodically. The wheel might have to be cleaned. A wash down with steam or water jet is usually sufficient. Cover the bearings so water won't enter the pillow block. Dirt accumulation in the housing should be removed. Fan wheels having worn blades should be replaced.

7. Check V-belt drives for belt wear, alignment and proper belt tension. Replace belts when worn with complete matched set.

8. Never run fan at higher speed that it was designed.

9. Lubricate motor bearings to the manufacturer's recommendations.

10. Eliminator plates should be washed annually.

11. Inspect the condition of the cabinet insulation and repair or replace as necessary.

14.2 INTEGRAL HORSEPOWER BALL BEARING MOTORS

1. Motors having pipe plugs or grease fittings should be re-lubricated while warm and at stand still.

2. Use a grease suitable for 15°F to 130°F temperatures.

3. Re-lubrication intervals must be selected to match your operating conditions. Table 3 provides a general guide for re-lubrication.

Table 3. Motor Re-lubrication Intervals.

HP Range	Standard Duty 8 Hrs. Per Day	Severe Duty 24 Hrs. Per Day Dirty, Dusty	Extreme Duty Very Dirty High Ambients
1.5 - 7.5	5 Years	3 Years	9 Months
10 - 40	3 Years	1 Year	4 Months
50 - 150	1 Year	9 Months	4 Months

14.3 FAN TROUBLES AND CORRECTIONS

The most common difficulties are listed below. These points should be checked in order to prevent needless delay and expense.

1. Capacity or pressure below rating
   a. Total resistance of system higher than anticipated.
   b. Speed too low.
   c. Dampers or VIV's not properly adjusted.
   d. Poor unit inlet or outlet conditions.
   e. Air leaks in system.
   f. Damaged wheel.
   g. Incorrect direction of rotation.
   h. Dirty filters.

2. Vibration and Noise
   a. Misalignment of bearings, wheel or V-belt drive.
   b. Unstable foundation.
   c. Foreign material in fan causing unbalance.
   d. Damaged wheel or motor.
   e. Broken or loose bolts and set screws.
   f. Bent shaft.
   g. Worn coupling.
   h. Fan wheel or driver unbalanced.
   I. Loose dampers or VIV's.
   j. Speed too high or fan rotating in wrong direction.
   k. Vibration transmitted to unit from some other source.

3. Overheated Bearings
   a. Too much grease.
   b. Damaged wheel or driver.
   c. Dirt in bearings.
   d. Excessive belt tension.

4. Overload on Driver
   a. Speed too high.
   b. Discharging over capacity due to existing system resistance being lower than original rating.
   c. Wrong direction of rotation.
   d. Electrical source - low voltage.
   e. Motor improperly wired.

14.4 REMOVAL OF FAN WHEEL AND SHAFT

Removal of fan wheels and shaft should be made through the inlet of the fan housing (Refer to Figure 16). To remove the wheel and shaft, the following must first be disassembled:

1. Belt guard (furnished only when specified)
2. V-belt drive
3. Bearings
4. Bearing supports
5. VIV linkage (if furnished)
6. Inlet bells or VIV's

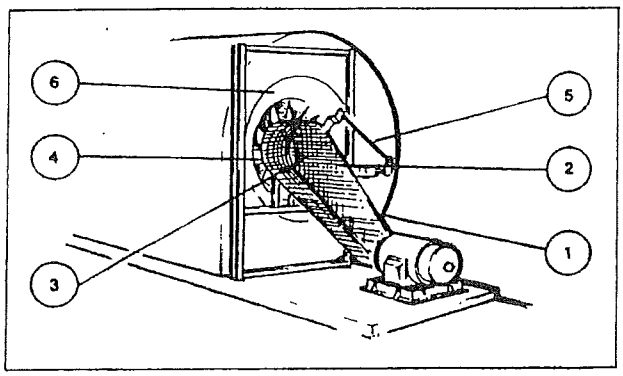

Figure 16. General Fan Wheel Assembly.

Units designed for wheel removal have been provided with adequate access. Other units require field modification.

Wheel should then be removed from the shaft. Ensure that all set screws are backed off before attempting to remove the wheel.

14.5 INSTALLATION OF NEW FAN WHEEL & SHAFT

New wheel and shaft are received disassembled. Follow these steps to install in the fan housing.

1. Remove the protective coating on shaft.
2. Remove keys from the shaft.
3. Carefully clean the inside of the wheel hub with solvent and lubricate bore for ease of shaft entrance.
4. Be sure that the set screws in the wheel hub are turned out to prevent possible scratching of the shaft. If three set screw holes appear in the hub, use only two - one over the key and the other leading key in direction of rotation.
5. Wheel and shaft are now ready for installation into the fan housing.
   a. Wheel should be placed into the fan housing, making sure the rotation arrow on the wheel agrees with the rotation arrow on the fan housing.
   b. After the wheel has been placed in the housing, they are blocked so that the wheel is centered in the fan inlet, with relation to the shaft center line.
   c. Slide the shaft into the wheel and tap key into the key way. Tighten the set screw over the key with only enough pressure to hold the wheel in position while placing the remaining parts in position.
   d. Slide the inlet bell/VIV into position and bolt to the housing.
   e. Mount the bearing supports in fan inlet.
   f. Mount the bearings on their supports, align the wheel with the inlet bell/VIV, align the bearings, shim pillow blocks where necessary, and tighten the nuts on all bolts.
   g. Tighten the set screws in the wheel hub over the key after final alignment. Then, tighten the set screw leading key in direction of air flow.
   h. If the fan has VIVs, assemble the main control shaft and mechanism per assembly drawing. Check its operating movement.
   i. Field balance **must** be anticipated any time a fan is disassembled for maintenance.

14.6 FAN BALANCING

Fan wheels are statically and dynamically balanced by the factory. The final balance of the fan is dependent on its installation and foundation.

Shut down the fan before personnel enters the air handling unit to place vibration pickups in place.

WARNING: Operation of any fan above alarm levels for a prolonged period of time or operation above shut down for **any** period of time, may cause equipment failure and extensive damage, as well as endangerment to personnel.

Refer to AMCA Standard 204-96, table 6.4, for guidance.

15.0 ORDERING SPARE PARTS

Contact your local Buffalo sales representative and supply the following information:

1. Shop order number stamped on the unit nameplate.
2. Size and type of unit, also stamped on nameplate.
3. Fan arrangement.
4. Description of the part required.
5. Special paints, coatings, or materials.

A bill of materials on the assembly drawing and a set of data sheets on your air handling unit was supplied before the unit was delivered. This information will be helpful when ordering spares.

RECOMMENDED SPARES

1. V-belts
2. Bearings
3. Filters

BEARINGS

1. State whether ball or roller
2. Manufacturer
3. Size and number
4. Fixed or floating
5. Parts required

16.0 WARRANTY

Seller warrants for a period not in excess of 18 months from date of shipment or 12 months from date of installation, whichever is earlier, the design, construction and materials of Seller's products to be free from defects in materials and workmanship. Seller's sole obligation and Buyer's exclusive remedy under this Warranty is limited to the repair or replacement without charge, F.O.B. Seller's factory, of any defective parts. Seller will not be responsible for damages of any nature, resulting from breach of the above stated Warranty or from any defect in Seller's products, either in materials, design or construction, or arising from the use of such products. Seller does not guarantee against abrasion, corrosion or erosion.

THE ABOVE STATED WARRANTY CONSTITUTES THE ONLY WARRANTY MADE BY SELLER AND IS GIVEN EXPRESSLY IN LIEU OF ALL OTHER WARRANTIES EXPRESS OR IMPLIED, INCLUDING ANY IMPLIED WARRANTIES OF MERCHANTABILITY OR FITNESS FOR A PARTICULAR PURPOSE.

Warranties on equipment not of Seller's manufacture are limited to the terms of any warranties furnished by seller's suppliers to the extent they may be made available to buyer.

Do not attempt to make any repair on fan equipment during its warranty period without the prior written approval of seller or its representatives; otherwise the warranty will be voided.

Seller shall not be liable for any injury to persons or property resulting from improper operation, installation, repair, or maintenance of equipment by customers or third parties. Experienced Service Representatives are available to supervise installation, or check over installation prior to start-up at reasonable charges. Arrangements can be made through your nearest Buffalo sales representative, or by phoning direct to the factory.

WARNING

Products must be used in accordance with the information specified in this manual and the manufactured-prepared fan assembly drawings. Regular inspections must be made to assure safe equipment operation. Strict compliance with all safety and maintenance procedures is the responsibility of the user and is necessary for safe and efficient operation of the fan. Failure to follow these fan installation, operation and maintenance procedures can result in accidents endangering personnel or equipment.

17.0 CLEANLINESS

Units **MUST** be inspected every three (3) months for cleanliness. Areas where dust or dirt can collect **MUST** be cleaned with an appropriate cleaning agent.

BUFFALO
AIR HANDLING

Telephone (434) 946-7455
FAX (434) 946-0226
www.buffaloair.com

BUFFALO AIR HANDLING
467 ZANE SNEAD DRIVE
AMHERST, VIRGINIA 24521

2
Fans

Twin City Fan & Blower

A Twin City Fan Company

5959 Trenton Lane · Minneapolis, MN 55442-3238
Phone (763) 551-7600 · Fax (763) 551-7601 · www.tcf.com

ISO 9001 CERTIFIED

Customer: Buffalo Air Handling
Job Name: Newark Airport
Job ID: 100111

December 20, 2010

Fan Description

Tag	AHU-11
Quantity	3
# fans per system	3
Type	EPFN
Size	365
Width	SWSI
Arrangement	4
Class	III
Rotation	W/A
Discharge	HOR
Wheel diameter (in.)	36.5
Drive method	60 Hz direct drive
Percentage width	100%
Percentage diameter	100%

Fan Performance

Total CFM	87,000
CFM/fan	29,000
Operating SP (in.wg)	8.8
Standard SP (in.wg)	8.8
RPM	1547
Tip Speed (fpm)	14,783
Oper. BHP/fan	52.73
Standard BHP/fan	52.73
Tot. Oper. BHP	158.20
Tot. Standard BHP	158.20
Outlet area (sq. ft)	N/A
Outlet Velocity (fpm)	N/A
Temperature (°F)	70
Altitude (ft)	0
Density (lb/ft³)	0.075
Max RPM for Class	1884
Static Efficiency	76.07
Mechanical Efficiency	76.07

Motor Data

HP	75
RPM	1800
Voltage	460V
Phase	3
Hz	60
Enclosure	TEFC
Efficiency	Prm.Eff.
Frame	365T
Design VFD Op. Freq.(hz)	52

Modifiers

3 fans operating in system

Sound

Individual Sound Power Levels in dB re. 10^{-12} Watts:

Octave Bands	1	2	3	4	5	6	7	8	LwA
Level at Inlet	98	102	104	86	86	85	79	75	97
Level at Outlet	96	100	102	95	93	90	85	80	99

Total Package Sound Power Levels in dB re. 10^{-12} Watts:

Octave Bands	1	2	3	4	5	6	7	8	LwA
Level at Inlet	103	107	109	91	91	90	84	80	102
Level at Outlet	101	105	107	100	98	95	90	85	104

Individual fan estimated sound pressure level in dBA (re: 0.0002 microbar) based on a single* ducted installation:

Distance in ft	1	3	5
dBA at Inlet	97	87	83
dBA at Outlet	99	89	85

*To estimate dBA level for ducted inlet and ducted outlet (into and out of the room) type installation, deduct 20 from the LwA value shown.

Using a directivity factor of 1.

Estimated Sound Pressure based on free field, spherical (Q = 1) radiation at the stated distance.

All quotations per Twin City Fan Terms and Conditions found at http://www.twincityfan.com/TC_TCF.pdf

102

Customer: Buffalo Air Handling	Fan Tag: AHU-11
Job ID: 100111	Model: 365 EPFN
Represented By: Buffalo Air Handling 434-946-7455	

TWIN CITY FAN AND BLOWER PERFORMANCE CURVE

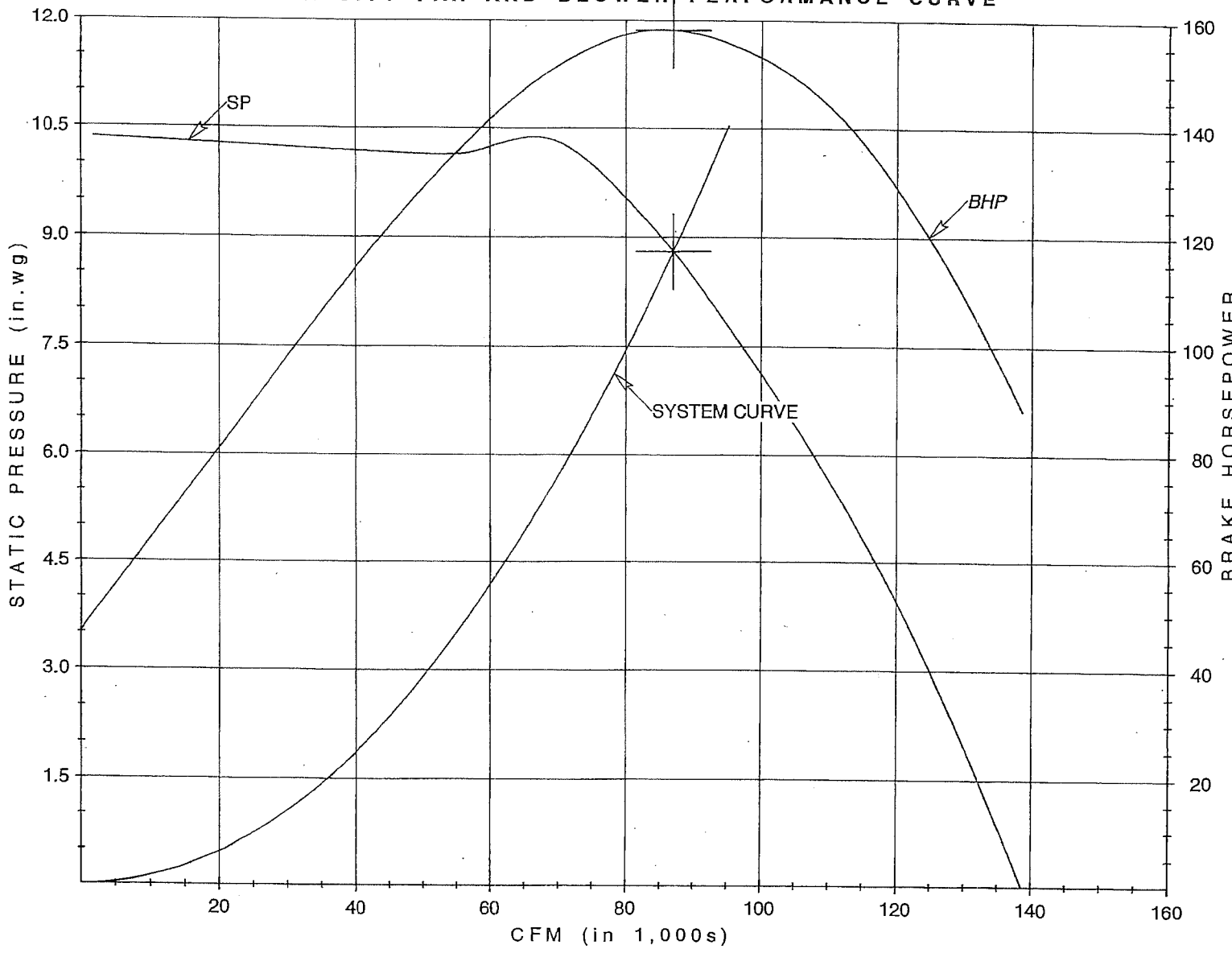

Total CFM:	87,000
SP:	8.8 in.wg
RPM:	1547
BHP:	52.73 / fan
Outlet Velocity:	N/A
Density:	0.075

Corrected for:
3 fans operating in system

Total Package Sound Power Level

Octave	In/Out
1	103 / 101
2	107 / 105
3	109 / 107
4	91 / 100
5	91 / 98
6	90 / 95
7	84 / 90
8	80 / 85

in db re 10^{-12} watts

12/20/2010

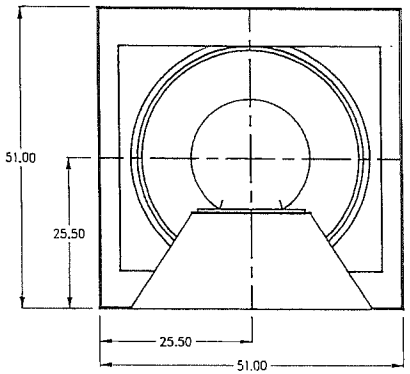

ORIVE SIDE VIEW

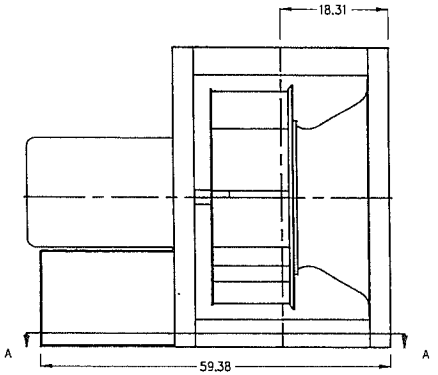

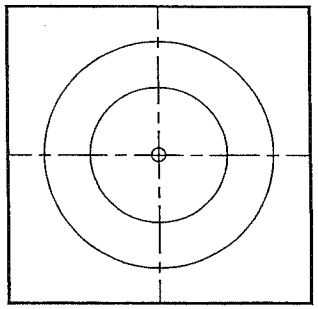

INLET SIDE VIEW

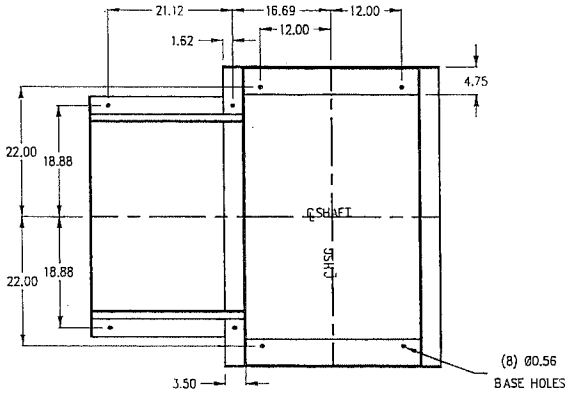

FOUNDATION PLAN

ACCESSORIES:
01. GUARD - PROTECTIVE ENCLOSURE
02. WHEEL - ALUMINUM
03. PIEZOMETER FLOW MEASUREMENT RING (D-180F)
04. SHAFT GROUNDING RING
05. MOTOR : 75 HP, 1800 RPM, 3/60/460V,
TEFC, PREM EFF., 365T FRAME
FURN BY OTHERS
MTD BY TCF

NOTES:
01. ROW NO. = FAN TAG, ROTATION
ROW 1 = 11498A / 100111, CCW
ROW 2 = 11498 / 100111, CW

JOB ID. 100111	CUSTOMER BUFFALO AIR HANDLING
CONTRACTOR	JOB NAME NEWARK AIRPORT
P.O.# D93316	S.O. 453550
	TAG UNIT (SEE NOTES, 01)

UNIT WEIGHT (APPROX.) IN POUND	
FAN WEIGHT	893
BASE WEIGHT	
MOTOR WEIGHT	816

BELT CENTER: MIN MAX ACTUAL

PERFORMANCE

C.F.M.	S.P.	R.P.M.	B.H.P.	T.S.	O.V.	DENS.LB/FT	TEMP DEG.F.	ALT. FEET
87,000	8.8"	1,547	52.73	1,783	N/A	0.075	70	0 To

Twin City Fan Company Ltd.
Aerovent Fiber Aire TC Axial TC Ventco Twin City Fan & Blower
Member of Air Movement and Control Association
5959 Trenton Lane Minneapolis, MN 55442 3238

TITLE SIZE 365 EPFN, ARR 4, CL III, DISCH HOR & NON-ROT (SEE NOTES, 01)

DWN BY	DATE	CHKD BY	DATE	FILE
TMS	07/05/11	DLH	07/06/11	BF453550-001-00

SCALE	DRAWING NO.	ROW	ITEM	REV
Scale	BF453550	001	00	

Twin City Fan & Blower

INSTALLATION, OPERATION & MAINTENANCE MANUAL

Centrifugal Fans

ENGINEERING SUPPLEMENT

ES-52

Issue Date: 1-1-94

Rev. Date: 7-1-10

Contents

Introduction 1
Shipping and Receiving 1
Handling 1
Short Term Storage 2
Long Term Storage 2
Foundations and Supporting Structures 2
Fan Installation 2
  Factory Assembled Units 2
  Disassembled Units 2
Fan Operation – Safety 4
Operation Checklist 4
Maintenance of Fans 5
  General Motor Maintenance 5
  Drive Maintenance 5
  Bearing Maintenance 6
  Lubrication 6
  Wheel and Shaft Maintenance 6
  Structural Maintenance 6
Troubleshooting Guidelines 6
Troubleshooting Performance Problems
  Air Capacity Problems 7
  Noise Problems 7
  Vibration Problems 7
  Motor Problems 7
  Drive Problems 7
  Bearing Problems 7
Limitation of Warranties and Claims 8

Introduction

The purpose of this manual is to provide instructions that complement good general practices when installing or operating fans manufactured by Twin City Fan & Blower. It is the responsibility of the purchaser to provide qualified personnel experienced in the installation, operation, and maintenance of air moving equipment.

Instructions given in the body of this manual are general in nature and apply to a variety of models manufactured by Twin City Fan & Blower. Most units can be installed and maintained with the instructions given.

Special applications may require additional information. These instructions are supplied in the form of attached appendices. Use the instructions in the appendix if the directions in this manual differ from instructions in the appendix.

As always, follow good safety practices when installing, maintaining and operating your air moving equipment. A variety of safety devices are available. It is the user's responsibility to determine adequate safety measures and to obtain the required safety equipment.

Shipping and Receiving

All Twin City Fan & Blower products are carefully constructed and inspected before shipment to insure the highest standards of quality and performance.

Compare all components with the bill of lading or packing list to verify that the proper unit was received.

Check each unit for any damage that may have occurred in transit. Any damage should be reported immediately to the carrier and the necessary damage report filed.

Handling

Handling of all air moving equipment should be conducted by trained personnel and be consistent with safe handling practices. Verify the lift capacity and operating condition of handling equipment. Maintain handling equipment to avoid serious personal injury.

Units shipped completely assembled may be lifted with slings and spreader bars. Use well-padded chains, cables or nylon straps. On most units, lifting lugs are provided for attaching chains (see Figure 1). Lift the fan in a fashion that protects the fan and fan coating from damage. Never lift a fan by the inlet or discharge flange, shafting or drives, wheel or impeller, motor or motor base, or in any other manner that may bend or distort parts.

Partial or disassembled units require special handling. All parts should be handled in a fashion which protects the coatings and parts from damage. Components should be handled such that forces are not concentrated and bending or distortion cannot occur.

Figure 1. Lifting Lug Locations

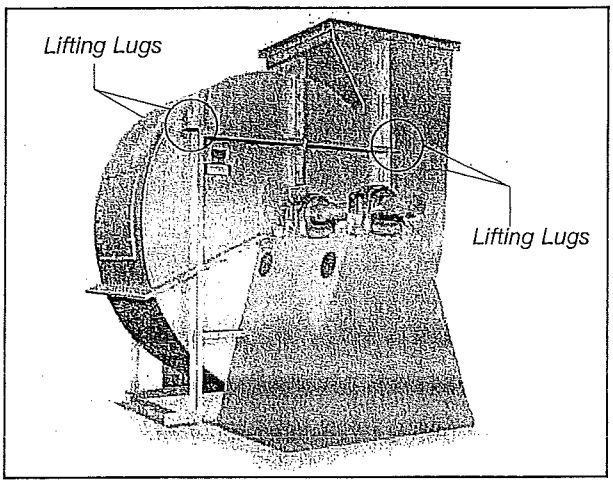

Housing should be lifted using straps and spreaders. Do not distort housing or side plates when lifting.

Bearing pedestals should be lifted using straps or padded chains. Under no circumstances should an attached or separated bearing pedestal be lifted by the shaft, bearings, drives, motor or wheel.

The shaft and wheel assembly may be lifted using a hoist and a spreader with a sling around the shaft at points nearest the wheel (see Figure 2). Take care not to scratch the shaft where the wheel or bearings will be mounted. Never lift or support the assembly by the wheel. Always support the assembly by the shaft when lifting or storing. Do not support the shaft or the wheel on housing

Figure 2. Moving Shaft and Wheel with Spreader Bar

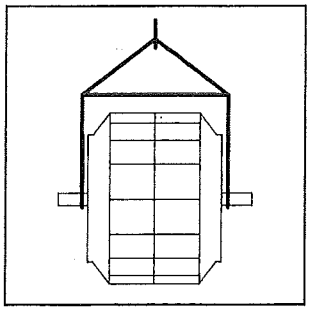

©2010 Twin City Fan Companies, Ltd.

sides. Use only the key provided with the shaft and wheel.

Wheels shipped separately can be lifted by slings running through the blades and around the hub. Never lift the wheel by blades or flanges. Always transport wheels by lifting. Do not roll the wheel as this can damage coatings and change the balance of the wheel.

Bent shafting is a source of vibration and bearing failure, so handle the shaft with care. Any scratches on the shaft may be removed with fine emery cloth or a stone.

Short Term Storage

If fan installation is to be delayed, store the unit in a protected area. Protect the fan and motor bearings from moisture and vibration (or shock loading).

Long Term Storage

Prior to Storage – Fan bearings (and motor bearings per the motor manufacturer's specifications) are to be greased at the time of going into extended storage. On belt drive units the belt tension should be reduced to less than half the specified value for the fan's design to prevent a sag/set from forming in the shafts and belts. If the unit was supplied with a motor, the motor windings should be measured at this time and recorded for comparison prior to placing in service. If the fan housing was supplied with a drain connection, this plug should be removed to prevent any moisture from accumulating in this portion of the unit during storage.

Storage Procedure – Fans should be stored indoors whenever possible where control over temperature, shock and dust is reasonably maintained. If units are to be stored outside in the elements, they should be covered with a water-resistant material. The bearings should be shielded individually from water and dirt; however, do not tightly seal to avoid trapping condensation. Stored equipment should be stored on a clean, dry floor or blocked up off the ground on blocks to prevent unit from setting in any water or directly on the ground. If shock or vibration will be present during storage, the unit may need to be placed on some type of vibration dampening material to aid in preventing brinelling of the bearing surfaces.

Periodic Check – On a monthly interval, the equipment should be checked to ensure that it has remained in an acceptable stored condition. The fan (and motor if supplied) should be rotated several times by hand while adding enough grease to replenish the bearing surfaces with fresh grease and to maintain a full bearing cavity. Grease used must be compatible with that already supplied in the motor and fan bearings. The fan impeller should be left at approximately 180 degrees from that of the previous month to prevent the shaft and impeller from taking a set in one position. Storage records should be maintained which indicate the above requirements have been followed. Consult the motor manufacturer for proper storage, space heater connection and lubrication if the unit was supplied with one.

Start-Up – When the unit is removed from storage, all bearing grease should be purged and replenished with fresh grease as per the lubrication decal. The motor should be measured to verify that the resistance is still at a satisfactory level compared to the value recorded prior to storage.

Foundations and Supporting Structures

Floor mounted fans should be installed on a flat, level, rigid concrete foundation with a mass at least three to five times that of the assembly supported as a guide, depending on the size and speed of the fan. Foundation shall be suitable for static and dynamic loads and foundation frequencies be separated at least 20% from the rotational speed/speed ranges. The plan area should be no more than twice that required by the equipment. Foundations with larger areas should have correspondingly larger mass. Anchor bolts should be "L" or "T" shaped with sufficient length for nuts, washers, shims, and threads for draw-down. Each bolt should be placed in a sleeve or pipe with a diameter larger than the bolt to allow for adjustment.

If the fans are mounted on a sub-structure, an inertia base with spring isolator system should be considered.

Fans mounted to or within a structure should be placed as close as possible to a rigid member such as a wall or column. The structure must be designed for rotating equipment; static design for strength is not sufficient to insure proper operation. Supports for suspended fans must be cross-braced to prevent side sway. Structural resonance should be at least 20% from fan operating speed. Vibration isolators should be used where applicable.

Any ducting should have independent support; do not use the fan to support ducting. Isolating the fan from ductwork with flex connections eliminates transmission of vibration. Fans handling hot gases require expansion joints at both the inlet and discharge to prevent excessive loads caused by thermal growth.

Fan Installation – Factory Assembled Units

Follow proper handling instructions given earlier.

1. Move the fan to the final mounting position.
2. Remove skid, crates, and packing materials carefully.
3. If supplied, place vibration pads or isolation base on mounting bolts. Line up holes in fan base with bolts.
4. Place fan on mounting structure. Carefully level unit using shims as required at all mounting hole locations. Bolt down the unit.
5. Any grout may now be used. Bolt the fan in position before applying grout. Do not depend upon grout to support rotating equipment.
6. Continue with Operations Checklist.

Additional instructions may be given for some fan models, components and accessories in the appendix.

Fan Installation – Disassembled Units

A unit is considered "disassembled" if any component required for proper operation is shipped or supplied separately or in pieces. Reference earlier instructions concerning proper handling of fan components.

Instructions for Mounting and Assembly of Unit:

1. Move lower housing/framework to mounting location.
2. If vibration pads or bases are used, place on bolts first. Place lower housing assembly onto bolts.
3. Level and shim if required. Bolt into place.
4. If separated pedestal or bearing pedestal:
   a. Bring bearing pedestal to desired location.
   b. Place any vibration base or pads into place. Set bearing pedestal on bolts.
   c. Never distort bearing pedestal by forcing it to align with a non-level surface. Shim beneath the pedestal as required.

d. Check bearing centerline height. Change centerline height to match centerline height of housing. High temperature units may require the housing centerline to be lower when cold so that it will be centered when hot.

e. Measure from housing to bearing pedestal to bring bearing pedestal into square with housing (a large square may also suffice).

f. Bolt into position.

5. Shaft and wheel assembly preparation:
   a. Clean protective coating off shaft with solvent. Do not touch clean areas of shaft with hands. Perspiration can cause rust or pitting over time.
   b. Remove keys from shaft.
   c. Clean inside of wheel bore with solvent. Make sure setscrews will not interfere when inserting shaft into wheel bore.
6. Arrangement 1, 9 or 10: Drive Component Assembly (See Figure 3):
   a. Insert shaft into wheel from back side of wheel.
   b. When shaft is flush with wheel hub, put key into keyway and tighten wheel setscrews.
   c. Insert shaft through opening in drive side. (If split housed unit, lower into position.)
   d. Install bearings onto shaft. Do not tighten bearing setscrews at this time. The bearing housing should be perpendicular and the bearing base parallel to the axis of the shaft to prevent loads caused by misalignment.
   e. Mount assembly, bolt bearings to drive stand. Shaft must be parallel with side of bearing pedestal. After aligning and bolting bearings to pedestal, tighten bearing setscrews. Continue with step 8.

Figure 3. Drive Component Assembly

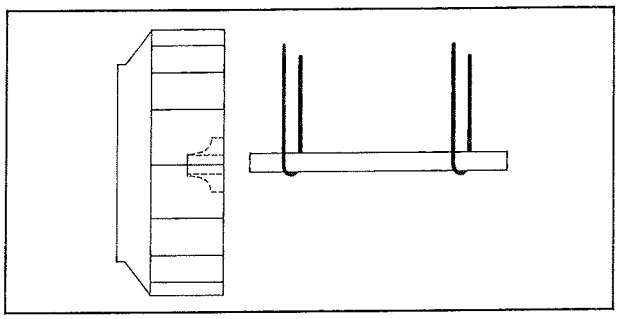

7. Arrangement 3 (Split-housed) units (See Figure 4):
   a. Parts on DWDI units are assembled in the following order as viewed from opposite drive side: Bearing bar assembly and opposite bearing, funnel, (housing side), wheel, (housing side), funnel, drive side bearing bar assembly, drive bearing and sheaves. Mount bearing bar assembly to housing. Center wheel in funnels.
   b. Parts on SWSI units are assembled in the following order as viewed from opposite drive side: Bearing bar assembly and opposite bearing, funnel, (housing side), wheel, (housing side), drive side bearing bar assembly, drive bearing and sheaves. Mount bearing bar assembly to housing. (See Figure 7 for wheel-funnel overlap.)
   c. Assemble parts in above order on shaft.
   d. Move assembly into position. Lightly bolt bearings into place.

Figure 4. Split-housed Drive Component Assembly

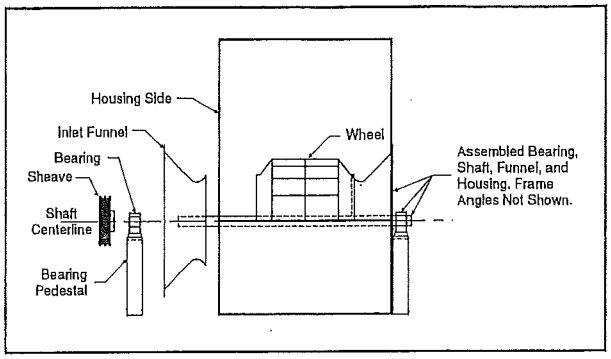

   e. Shaft should be parallel with discharge of housing. Move bearings to accommodate.
   f. Level shaft; shim bearings if required. Tighten bearing setscrews.
8. Install motor on base. Carefully align shafts for drive installation.
9. Mount drives as follows:
   a. Slip (do not pound) proper sheave onto corresponding shaft. CAUTION: PLACING FAN SHEAVE ON MOTOR CAN OVERSPEED WHEEL AND CAUSE STRUCTURAL FAILURE.
   b. Position sheaves so they are placed on motor shaft and fan shaft as close as possible to the motor and/or bearing. Sheave must be placed so that it does not rub on the bearing, motor guard or other structures. On keyed shafts, the key should be placed in the keyway pushed toward the bearing as far as the runout will allow without rubbing. The back of the sheave should be lined up with the end of the key (see Figure 5). For sheaves without a key, the sheave should be placed as close to motor and/or bearing as possible without rubbing. Typically the sheave should be at least ¼" away from the motor, bearing, guard, structures, etc.

Figure 5. Sheave Position

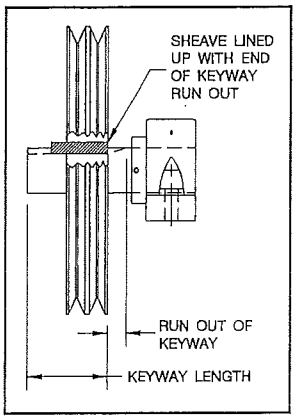

Figure 6. Sheave Alignment

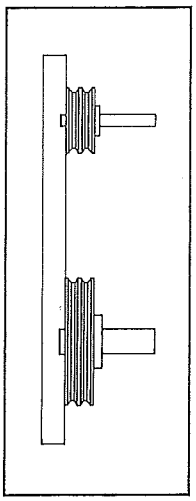

   c. Align sheaves with a straightedge extended along the perimeters of both sheaves, just making contact in two places on outside perimeters of both sheaves (see Figure 6).
   d. Tighten down sheave bolts.
   e. Install a matched set of belts. Slide the motor to obtain slack and tighten belts. Using a pry will damage belts.
   f. Tighten belts to proper belt tension. Ideal tension is just enough tension so that belts do not slip under peak load. Recheck sheave alignment.

Figure 7. Wheel-Funnel Overlap

HIB, RTF, HRT, BC, BCS, TSL, BAF, BAE, EPF & EPQ

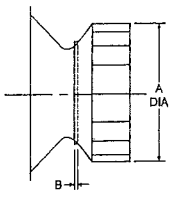

HIB, RTF, HRT* Wheel Placement

Size	A	B	B*		Size	A	B	B*	
			19	23				19	23
180	20.50	0.31	—	—	400	45.25	0.69	1.03	0.97
200	22.50	0.34	—	—	450	50.00	0.75	1.13	1.06
220	25.00	0.38	—	—	490	55.13	0.81	1.25	1.13
240	27.50	0.44	—	—	540	61.00	0.91	1.38	1.25
270	30.38	0.47	0.50	0.50	600	67.50	1.00	1.31	1.31
300	33.50	0.50	0.69	0.69	660	74.25	1.13	1.56	1.44
330	37.00	0.56	0.69	0.69	730	82.00	1.22	1.75	1.63
360	41.00	0.63	0.81	0.81	800	90.75	1.34	1.06	1.31

*Use second 'B' columns for HRT-19 and HRT-23 dimensions

BC-SW, BC-DW, BCS, TSL, BAF SWSI & DWDI Wheel Placement

Size	122	135	150	165	182	200	222	245	270	300	330
A	12.25	13.50	15.00	16.50	18.25	20.00	22.25	24.50	27.00	30.00	33.00
B	0.32	0.34	0.38	0.44	0.56	0.63	0.69	0.75	0.88	0.97	1.06

Size	365	402	445	490	542	600	660	730	807	890
A	36.50	40.25	44.50	49.00	54.25	60.00	66.00	73.00	80.75	89.00
B	0.94	1.03	1.13	1.25	1.38	1.56	1.69	1.88	2.09	2.28

EPF, EPQ Wheel Placement

Size	122	150	165
A	13.00	14.13	16.16
B	0.25	0.25	0.25

BAE SWSI & DWDI Wheel Placement

Size	122	135	150	165
A	12.25	13.50	15.00	16.50
B	0.31	0.34	0.38	0.44

EPF, EPQ, BAE SWSI & DWDI Wheel Placement

Size	182	200	222	245	270	300	330	365	402	445	490
A	19.00	20.82	23.16	25.51	28.11	31.23	34.36	38.00	41.90	46.33	51.01
B	0.38	0.41	0.46	0.50	0.55	0.62	0.68	0.75	0.83	0.91	1.01

Size	542	600	660	730	807
A	56.48	62.47	68.71	76.00	84.07
B	1.11	1.23	1.36	1.50	1.66

APF & APQ Wheel Placement

Size	121	141	161	181	201	221	251	281	321	351	391	441	491	551	631	711	791
A	13.00	14.13	16.16	18.44	19.94	22.78	25.06	28.25	31.81	35.81	39.81	44.56	50.06	55.75	63.69	71.69	79.63
B	0.25	0.25	0.25	0.31	0.31	0.31	0.50	0.50	0.56	0.63	0.63	0.75	0.78	0.81	1.03	1.28	1.38

RBA, RBO & RBR

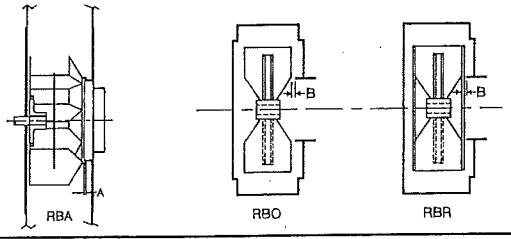

RBA Wheel Placement

Size	907	909	911	913	915	917	919	921	923	926	929	933	937	941	945	949	954	960
A	0.25	0.38	0.47	0.53	0.59	0.69	0.69	0.0	0.0	0.0	0.0	0.0	0.0	0.0	0.0	0.0	0.0	0.0

RBO, RBR Wheel Placement

Size	913	915	917	919	921	923	926	929	933	937	941	945	949	954	960
B	0.53	0.53	0.59	0.69	0.78	0.88	0.97	1.03	1.22	1.38	1.56	1.69	1.81	1.88	2.16

Note: On sizes 905-911 wheel is to be centered in housing.

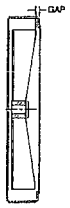

MBW, MBO & MBR

MBW, MBO, MBR Wheel Placement

Size	196	224	252	280	308	336	365	421	477	533	589
MBW	0.50	0.44	0.38	0.25	0.38	0.44	0.56	0.63	0.75	0.75	0.88
MBO	0.50	0.44	0.38	0.25	0.38	0.44	0.56	0.63	0.75	0.75	0.88
MBR	0.25	0.25	0.25	0.25	0.25	0.38	0.50	0.69	0.81	0.94	1.00

Note: On sizes 421-589 wheel is to be centered in housing.

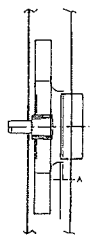

BCN

BCN Wheel Placement

Size	270	300	330	365	402	445	490	542	600	660	730
A	0.09	0.09	0.13	0.13	0.13	0.16	0.16	0.19	0.22	0.22	0.25

FC

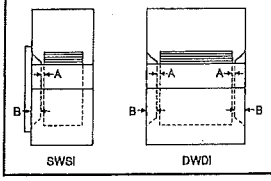

FC Wheel Placement

Size	A	B	Size	A	B
10.5	0.47	0.69	30	0.75	4.38
12	0.25	1.88	33	0.81	5.00
15	0.44	2.19	36	0.75	5.00
18	0.50	2.25	39	1.06	6.38
21	0.69	2.88	42	1.69	7.50
24	0.81	3.00	48	1.50	7.13
27	0.69	3.13	54	1.00	10.50

g. After initial installation of belts, recheck belt tension again after a few days to adjust belt tension. (New belts require a break-in period of operation.)

10. Install any safety devices or accessories supplied. (Accessories commonly used are inlet vanes, shaft seals and shaft coolers, plugs, dampers, and inlet or discharge screens. Refer to appropriate documents in appendix.)
11. Grout may now be applied. Grout is used to distribute loads and should not be used as the sole support of any rotating equipment.
12. When connecting the fan to the system, it is recommended that the inlet and discharge be isolated from the system with flex connections (where practical) to block transmitted vibration. All duct connections to the fan should be independently supported. Do not use fan to support duct.

Fan Operation - Safety

For general safety practices for air moving equipment, see AMCA Bulletin 410.

Twin City Fan & Blower has many safety accessories available. These safety devices include (but are not limited to) belt guards, shaft guards, inlet and discharge screens. The use, abuse, or non-use of safety devices is the responsibility of the purchaser.

Facility-related safety conditions include fan accessibility and location. How easily can non-service personnel access the unit? Is the fan in a hazardous duty environment? Was the unit ordered for this duty? Other concerns must also be addressed. All fans should be powered through switches which are easily accessible to service personnel from the fan. Every switch should have the ability to be "locked-off" by the service person and the key to be retained by this person to prevent accidental power of the fan while service is in process.

Operation Check List

Verify that proper safety precautions have been followed:
- ☐ Electrical power must be locked off.

Check fan mechanism components:
- ☐ System connections are properly made and tightened.
- ☐ Bearings are properly lubricated.
- ☐ Wheel, drives and fan surfaces are clean and free of debris.
- ☐ Rotate the impeller by hand to verify it has not shifted in transit.
- ☐ Check fan/wheel overlap. (See Figure 7.)
- ☐ Drives on correct shafts (not reversed).
- ☐ Check position of guards to prevent rubbing.

Check fan electrical components:
- ☐ Motor is wired for proper supply voltage.
- ☐ Motor was properly sized for power and rotational inertia of rotating assembly.
- ☐ Motor is properly grounded.
- ☐ All leads are properly insulated.

Trial "bump":
- ☐ Turn on power just long enough to start assembly rotating.
- ☐ Check rotation for agreement with rotation arrow. Does the assembly make any unusual noise? (See Figure 8.)
- ☐ Check drive alignment and tension. Does this meet with drive manufacturer's recommendations?
- ☐ Correct any problems which may have been found. (Follow safety guidelines - shut power off.) Perform checklist again until unit is operating properly.
- ☐ Run unit up to speed.

Figure 8. Proper Wheel Rotation

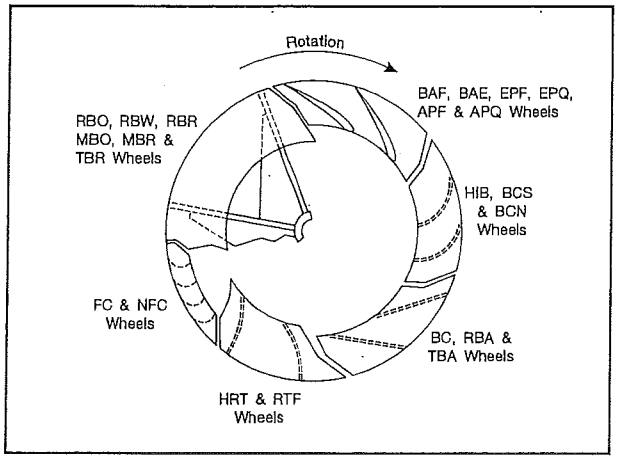

Verify fastener tightness. These may have loosened during shipment or installation.

- ☐ Setscrews attaching wheel hub to shaft.
- ☐ Setscrews in drive sheaves or coupling.
- ☐ Nuts on inlet funnel.
- ☐ Nuts and bolts holding motor.
- ☐ Nuts holding housing frame to base and base to ground.
- ☐ Nuts on accessories including shaft seal, access doors and pie-splits.
- ☐ Bolts in taper-lock bushings.
- ☐ Grease line connections.

After one week of operation, check all nuts, bolts and setscrews and tighten if necessary.

Maintenance of Fans

This section contains general maintenance instructions for your Twin City Fan & Blower unit. For specific information about maintenance of components, particularly for special application fans, see the attached documents.

General Motor Maintenance

The three basic rules of motor maintenance are keep the motor clean, dry and properly lubricated.

Keeping motors and windings clean is important because dirt and dust serve as thermal insulators. Heat normally dissipated by the motor is trapped causing overheating and/or premature failure. Blow dust and dirt out of windings and off the motor periodically. Use low pressure (50 psig) airstream so that winding damage does not occur. Keep the area surrounding the motor open so the air can circulate through the motor cooling fan. Follow normal maintenance schedule given to the right.

Motors should be kept dry to avoid electrical short circuits. Motors kept in storage for long periods of time can have moisture condense on the windings. Be certain the motor is dry before using.

Some smaller motors are lubricated for life. Motor bearing lubrication, if required, must follow a rigorous schedule. Motors less than 10 hp running about eight hours a day in a clean environment should be lubricated once every five years; motors 15 to 50 hp, every 3 years; and motors 50 to 150 hp, yearly. For motors in a dusty or dirty environment or running 24 hours a day, divide the service interval by 2. If the environment is very dirty or high temperatures exist, divide the service interval by 4. Lubrication requirements are normally attached to the motor. Do not overlubricate.

Figure 9. Safety & Lubrication Instructions for Fans with Ball Bearings

WARNING

1. This equipment must not be operated without proper guarding of all moving parts. While performing maintenance be sure remote power switches are locked off. See AMCA Publication 410 for recommended safety practices.
2. Before starting: Check all setscrews for tightness, and rotate wheel by hand to make sure it has not moved in transit.

Relubrication Schedule (Months)*
Ball Bearing Pillow Blocks

Speed (RPM)	500	1000	1500	2000	2500	3000	3500	4000	4500
Shaft DIA									
½" thru 1 11/16"	6	6	5	3	3	2	2	2	1
1 15/16" thru 2 7/16"	6	5	4	2	2	1	1	1	1
2 1/16" thru 2 15/16"	5	4	3	2	1	1	1		
3 7/16" thru 3 15/16"	4	3	2	1	1	1			

* Suggested initial greasing interval: Relubricate while running, if safety permits, until some purging occurs at seals. Adjust lubrication frequency depending on condition of purged grease. Hours of operation, temperature, and surrounding conditions will affect the relubrication frequency required.

1. Lubricate with a high quality NLGI No. 2 or No. 3 multipurpose ball bearing grease having rust inhibitors and antioxidant additives. Some greases having these properties are:

   Shell - Alvania No. 2 Mobil - Mobilith AW2/Mobilith SHC100
   Gulf - Gulfcrown No. 2 American - Rykon Premium 2

2. Lubricate bearings prior to extended shutdown or storage and rotate shaft monthly to aid corrosion protection.

Figure 10. Safety & Lubrication Instructions for Fans with Unit Roller Bearings

WARNING

1. This equipment must not be operated without proper guarding of all moving parts. While performing maintenance be sure remote power switches are locked off. See AMCA Publication 410 for recommended safety practices.
2. Before starting: Check all setscrews for tightness, and rotate wheel by hand to make sure it has not moved in transit.

Relubrication Schedule (Months)*
Spherical Roller Bearing - Solid Pillow Blocks

Speed (RPM)	500	1000	1500	2000	2500	3000	3500	4000	4500
Shaft DIA									
1 3/16" thru 1 7/16"	6	4	4	2	1	1	1	1	½
1 11/16" thru 2 3/16"	4	2	1½	1	½	½	½	½	½
2 7/16" thru 3 7/16"	3	1½	1	½	½	¼	¼		
3 15/16" thru 4 15/16"	2½	1	½	¼					

*Suggested initial greasing interval: Relubricate while running, if safety permits, until some purging occurs at seals. Adjust lubrication frequency depending on condition of purged grease. Hours of operation, temperature, and surrounding conditions will affect the relubrication frequency required.

1. Lubricate with a multipurpose roller bearing NLGI No. 2 having rust inhibitors and antioxidant additives, and a minimum oil viscosity of 500 SSU at 100°F. Some greases having these properties are:

   Shell - Alvania No. 2 Mobil - Mobilith AW2/Mobilith SHC100
   Texaco - Premium RB2 American - Rykon Premium 2

2. Lubricate bearings prior to extended shutdown or storage and rotate shaft monthly to aid corrosion protection.

Figure 11. Safety & Lubrication Instructions for Fans with Split Roller Bearings

WARNING

1. This equipment must not be operated without proper guarding of all moving parts. While performing maintenance be sure remote power switches are locked off. See AMCA Publication 410 for recommended safety practices.
2. Before starting: Check all setscrews for tightness, and rotate wheel by hand to make sure it has not moved in transit.

Relubrication Schedule (Months)* Spherical Roller Bearing - Split Pillow Blocks										Grease to be added at each interval
Speed (RPM)	500	750	1000	1500	2000	2500	3000	3500	4000	
Shaft DIA										
1 7/16" thru 1 15/16"	6	4½	4	4	3½	2½	2½	1	1	0.50 oz.
2 3/16" thru 2 11/16"	5	4½	4	2½	2½	1½	½	¼	¼	0.75 oz.
2 15/16" thru 3 15/16"	4½	4	3½	2½	1½	1	½			2.00 oz.
4 7/16" thru 4 15/16"	4	4	2½	1	½					4.00 oz.
5 7/16" thru 5 15/16"	4	2½	1½	1						7.00 oz.

*Suggested initial greasing interval - remove bearing cap and observe condition of used grease after lubricating. Adjust lubrication frequency as needed. Hours of operation, temperature, and surrounding conditions will affect the relubrication frequency required. Clean and repack bearings annually. Remove old grease, pack bearing full and fill housing reservoirs on both sides of bearing to bottom of shaft.

1. Lubricate with a multipurpose roller bearing NLGI No. 2 having rust inhibitors and antioxidant additives, and a minimum oil viscosity of 500 SSU at 100°F. Some greases having these properties are:

   Shell - Alvania No. 2 Mobil - Mobilith AW2/Mobilith SHC100
   Texaco - Premium RB2 American - Rykon Premium 2

2. Lubricate bearings prior to extended shutdown or storage and rotate shaft monthly to aid corrosion protection.

Static Oil Lubrication

1. Use only highest quality mineral oil with a minimum viscosity of 100 SSU at the oil's operating temperature. The oil's operating temperature is approximately 10° greater than the bearing's housing. SAE values having this viscosity at the following operating temperature are:

   150° - SAE 20 160° - SAE 30 180° - SAE 40

2. Static oil level should be at the center of the lower-most roller (Do not overfill.)
3. Complete lubrication change should be made annually.

Drive Maintenance

V-belt drives need periodic inspection and occasional belt replacement. When inspecting drives, look for dirt buildup, burrs or obstructions which can cause premature belt or drive replacement. If burrs are found, use fine emery cloth or a stone to remove the burr. Be careful that dust does not enter the bearings.

Check the sheaves for wear. Excessive slippage of belts on sheaves can cause wear and vibration. Replace worn sheaves with new ones. Carefully align sheaves to avoid premature sheave failure.

Observe belts for wear. If fraying or other wear is observed to be mostly on one side of the belts, the drives may be misaligned. Reinstall the drives according to instructions given for Fan Installation – Disassembled Units. Never use belt dressing on any belts.

When replacing belts, replace the entire set. After initial replacement and tensioning, recheck belt tension after a few days to adjust belt tension again. (New belts require a break-in period of operation.)

Bearing Maintenance

For instructions covering special lubrication intervals, bearing assembly or disassembly, or installation details, see attached documents. Any bearing which is disassembled should be kept separate from other bearing parts as components may not be interchangeable. Maintain cleanliness of components and bearings to prevent bearing contamination.

Bearing failure can occur from many causes. See Troubleshooting section for details.

Note: All speeds shown do not apply to all shaft sizes in that group. Consult the factory if in doubt of maximum speed for a particular bearing.

Lubrication

Proper lubrication of bearings helps assure maximum bearing life. All fans are equipped with decals indicating relubrication intervals for normal operating conditions. However, every installation is different and the frequency of lubrication should be established accordingly.

Experience has shown that airborne moisture and heavy dust will dramatically reduce the life of the bearing lubricant. If any of these adverse conditions exist, it is recommended that bearings be regreased after several days of operation. Lubrication intervals can then be adjusted based on the condition of the purged grease.

Figure 9 illustrates the decal for ball bearings, Figure 10 the decal for solid pillow block spherical roller bearings, and Figure 11 shows the decal for split pillow block spherical roller bearings. Observation of the condition of the grease expelled from the bearings at the time of relubrication is the best guide as to whether regreasing intervals and the amount of grease added should be altered. This observation is particularly important when bearings operate continuously over 160°F.

Greases are made with different bases. There are synthetic base greases, lithium base, sodium base, etc. Avoid mixing greases with different bases. They could be incompatible and result in rapid deterioration or breakdown of the grease.

All bearings are filled with grease before leaving the factory. When the fans are started, the bearings may discharge excess grease through the seals for a short period of time. Do not replace the initial discharge because leakage will cease when the excess grease has worked out. Sometimes the bearing has a tendency to run hotter during this period and one should not get alarmed unless it lasts over 48 hours or gets above 220°F. When relubricating, use a sufficient amount of grease to purge the seals. Rotate bearings during relubrication where good safety practice permits.

For bearings with oil lubrication, sight gauges are installed so that a proper level can be reviewed and maintained. Sight gauges should be read with bearings not rotating.

Wheel and Shaft Maintenance

Periodically inspect the shaft and wheel for dirt buildup, corrosion, and signs of excess stress or fatigue. Clean the components and, when appropriate, apply new coatings. (Any addition of coatings or weld can create an imbalance.) Check the balance of the assembly.

Structural Maintenance

All structural components or devices used to support or attach the fan to a structure should be checked at regular intervals. Vibration isolators, bolts, foundations, etc., are subject to failure from corrosion, erosion, and other causes. Improper mounting can lead to poor operation characteristics or fan fatigue and failure.

Check metallic components for corrosion, cracks, or other signs of stress. Concrete should be checked to ensure the structural integrity of the foundation.

Troubleshooting Guidelines

Use current safety practices when investigating fan or system performance problems. General safe practices and performance troubleshooting guidelines can be found in AMCA Publications 410 and 202, respectively. Fan application and field measurement procedures can be found in AMCA Publications 201 and 203.

Troubleshooting Performance Problems

The lists below indicate possible areas to check when air or sound values do not match expectations. Most fan problems can be pinpointed to one of these common causes.

Air Capacity Problems:

1. Resistance of system not at design rating. If resistance is lower than expected, both airflow and horsepower may be up. If resistance is higher than anticipated, air volume will be down.
2. Fan speed is not at design speed.
3. Air density not at design values. Also check air performance measurement techniques/procedures.
4. Devices for air modulation are closed or plugged. Also check filters.
5. Wheel mounted improperly or is rotating in reverse.
6. Parts of system or fan have been damaged or need cleaning.

Noise Problems:

1. Air performance is incorrect and fan is not at design point of operation. Fan forced to operate in an unstable flow region.
2. Bearing failure. Check bearings (lubrication).
3. Supply voltage high or inconsistent supply frequency. Adjustable frequency controllers can generate motor noise.
4. Objects which are installed in a high velocity airstream can generate noise. This includes flow sensors, turning vanes, etc.
5. Poor fan inlet conditions.
6. Acoustics or sound measurement procedure incorrect.

Vibration Problems:

1. Misalignment of drive components.
2. Poor foundations or mounting structure (resonances).
3. Foreign material attached to rotating components.
4. Damaged rotating components (bearings, shaft, fan, wheel, sheaves).
5. Broken, loose or missing setscrews.
6. Loose bolts.
7. Vibration transmitted by another source.
8. Water accumulating in airfoil blades.
9. Fan is operating in stall or unstable flow region.

NOTE: All fans manufactured by Twin City Fan & Blower are factory balanced prior to shipment. Handling and movement of the fan during shipment may cause the rotating assembly to shift. Balance should be checked once the fan is installed. If a final trim balance is required, it is the end user's responsibility to bring the fan back to factory specifications. Final trim balancing is not the responsibility of Twin City Fan & Blower.

Motor Problems:

1. Incorrect wiring.
2. Speed of fan too high.
3. Parts improperly installed - binding.
4. Bearings improperly lubricated.
5. WR^2 capability of motor too low for application.
6. Protection devices may be improperly sized.

Drive Problems:

1. Belts improperly tensioned.
2. Drive alignment is poor.

Bearing Problems:

Generally speaking, Twin City Fan & Blower uses three types of bearings:

1. Ball bearing with set screw lock.
2. Spherical roller bearings with set screw lock.
3. Spherical roller bearings with adapter lock/taper lock feature to attach them to the shaft.

Ball bearings – These are self-aligning bearings and should present no alignment problems with one exception: i.e., on Sealmaster bearings there is a pin beneath the grease fitting which prevents the bearings outer race from rotating. Should this pin jam, the bearing loses its alignment feature.

Common failure causes are (1) set screws loosening and shaft turning within the bearing, and (2) crowned bearing supports. Loosen one bolt and measure the clearance between the pillow block and the support. Add shim to compensate.

Spherical Roller Bearings with Set Screw Lock – The self-aligning characteristic of these bearings are inherent in the spherical roller design. The closer that these bearings are to perfect alignment, the cooler they will operate.

Common failure causes are the same as with ball bearings, mainly set screws loosening and crowned bearing supports.

Spherical Roller Bearings with Adapter Lock – Again, the self-aligning feature is inherent in the spherical design. Good alignment results in a cooler operating bearing. The faster the bearing operates the more critical this becomes.

A common cause of failure is improper installation practice. Removing too much clearance from the bearing can result in preloading the bearing, resulting in premature failure; and removing not enough can result in the shaft rotating within the bearing. Properly tightened, this method of attaching a bearing to a shaft is second only to a press fit. Crowned bearing supports can also preload these bearings and should be checked by loosening one side of the bearing and checking for clearance.

Lubrication – The major cause of bearing failure is contamination of grease, insufficient grease, or incompatibility of grease. If a fan is to be stored for any length of time at the job site, the bearings immediately should be filled with grease while rotating the shaft and then the bearings should be regreased and rotated monthly. This will prevent moisture, which condenses within the bearing, from corroding the raceways. Most greases used on fan pillow blocks are lithium base. Use the greases shown on the bearing decal. Do not mix the bases without completely purging out the initial grease.

Initially, follow the lubrication instruction on the side of the fan. The frequency of lubrication should be adjusted depending on the condition of the old grease being purged. This is the responsibility of the user. If the grease is dirty, the lubrication frequency should be more often.

a. Noise – If a bearing is increasing in noise intensity and/or vibration, it will probably result in failure.

b. Temperature – If a bearing temperature begins to gradually rise, it will generally result in failure. A bearing can operate up to 200 degrees and operate satisfactorily if the temperature remains constant and the bearing receives adequate lubrication. Remember that a roller bearing under the same load and speed will be somewhat more noisy and run warmer than a ball bearing. This is normal.

Rough handling and/or dropping a fan can result in brinelling the bearing. This appears as a clicking noise at first, then gradually worsens until failure.

When replacing a bearing, always align the bearings first, then bolt the pillow blocks to their support, rotate the shaft, fasten the bearings to it. If the bearing is fastened to the shaft first, tightening the pillow block bolts may bind the shaft and preload the bearings.

Limitation of Warranties and Claims

Seller warrants to the original purchaser that the goods sold hereunder shall be free from defects in workmanship and material under normal use and service (except in those cases where the materials are supplied by the buyer) for a period of one year from the date of original installation or eighteen (18) months from the date of shipment, whichever occurs first. The liability of seller under this warranty is limited to replacing, repairing, or issuing credit (at cost, F.O.B. factory and at seller's discretion) for any part or parts which are returned by buyer during such period provided that:

a. seller is notified in writing within ten (10) days following discovery of such defects by buyer, or within ten (10) days after such defects should reasonably have been discovered, whichever is less;

b. the defective unit is returned to seller, transportation charges prepaid by buyer.

c. payment in full has been received by seller or said products; and

d. seller's examination of such unit shall disclose to its satisfaction that such defects have not been caused by misuse, neglect, improper installation, repair, alteration, act of God, or accident.

e. seller cannot guarantee sound pressure levels or dBA.

No warranty made hereunder shall extend to any seller product whose serial number is altered, effaced or removed. Seller makes no warranty, express or implied, with respect to motors, switches, controls, or other components of seller's product, where such components are warranted separately by their respective manufacturers. THIS WARRANTY IS EXPRESSLY IN LIEU OF ALL OTHER WARRANTIES, EXPRESS OR IMPLIED, WHETHER STATUTORY OR OTHERWISE, INCLUDING ANY IMPLIED WARRANTY OF MERCHANTABILITY OR FITNESS FOR A PARTICULAR PURPOSE. In no event shall seller be liable to buyer for indirect, incidental collateral, or consequential damages of any kind. (BUYER'S FAILURE TO PAY THE FULL AMOUNT DUE WITHIN SIXTY (60) DAYS OF DATE OF INVOICE SHALL OPERATE TO RELEASE SELLER FROM ANY AND ALL LIABILITY OR OBLIGATION ARISING PURSUANT TO ANY WARRANTY, EXPRESS OR IMPLIED, WHETHER STATUTORY OR OTHERWISE, INCLUDING ANY IMPLIED WARRANTY OR MERCHANTABILITY OR FITNESS FOR A PARTICULAR PURPOSE, MADE IN CONNECTION WITH ANY CONTRACT FORMED HEREUNDER. BUYER AGREES THAT SUCH FAILURE TO PAY SHALL CONSTITUTE A VOLUNTARY WAIVER OF ANY AND ALL SUCH WARRANTIES ARISING PURSUANT TO SUCH CONTACT.)

Twin City Fan & Blower

A Twin City Fan Company

5959 Trenton Lane · Minneapolis, MN 55442-3237
Phone (763) 551-7600 · Fax (763) 551-7601 · www.tcf.com

MEMBER

ISO 9001 CERTIFIED

1.0 SCOPE

The purpose of this procedure is to aid and give guidance in minimizing possible damage of Twin City Fan & Blower supplied equipment due to prolonged storage.

2.0 PRIOR TO STORAGE

Fan bearings (and motor bearings per the motor manufacturer's specifications) are to be greased at the time of going into extended storage. On belt drive units the belt tension should be reduced to less than half of the specified value for that design to prevent a sag/set from forming in the shafts and belts. If the unit was supplied with a motor, the motor windings should be meggered at this time and recorded for comparison prior to placing in service. If the fan housing was supplied with a drain connection, this plug should be removed to prevent any moisture from accumulating in this portion of the unit during storage.

3.0 STORAGE PROCEDURE

Fans should be stored indoors whenever possible where control over temperature, shock and dust is reasonably maintained. If units are to be stored outside in the elements, they should be covered with a water-resistant material. The bearings should be shielded individually from water and dirt; however, do not tightly seal to avoid trapping condensation. Stored equipment should be stored on a clean, dry floor or blocked up off the ground on blocks to prevent unit from setting in any water or directly on the ground. If shock or vibration will be present during storage, the unit may need to be placed on some type of vibration dampening material to aid in preventing brinelling of the bearing surfaces.

4.0 PERIODIC CHECK

On a monthly interval, the equipment should be checked to ensure that it has remained in an acceptable stored condition. The fan (and motor if supplied) should be rotated several times while adding enough grease to replenish the bearing surfaces with fresh grease or to maintain a full bearing cavity. Grease used must be compatible with that already supplied in the motor and fan bearings. The fan should be left at approximately 180 degrees from that of the previous month to prevent the shaft and impeller from taking a set in one position. Storage records should be maintained which indicate the above requirements have been followed. Consult the motor manufacturer for proper storage, space heater connection and lubrication if the unit was supplied with one. Refer to Twin City Fan & Blower bulletins ES-52 or ES-995 for additional storage information.

5.0 START-UP

When the unit is removed from storage, all the bearing grease should be purged and replenished with fresh grease as per the lubrication decal. The motor should be meggered to verify that the resistance is still at a satisfactory level compared to the value recorded prior to storage. Then refer to the Twin City Fan & Blower Installation, Operation & Maintenance Manual for complete start-up procedure.

Twin City Fan & Blower

A Twin City Fan Company

5959 Trenton Lane · Minneapolis, MN 55442-3238
Phone (612) 551-7600 · Fax (612) 551-7601 · www.tcf.com

Piezometer Ring (Airflow Measuring System)

Twin City Fan is pleased to introduce The Piezometer Ring Airflow Measuring System, now available as an accessory for our housed and plenum fans. The system consists of a Piezometer ring mounted at the throat and a static pressure tap mounted on the face of the inlet cone. A differential pressure transducer and digital display can also be provided. Based on Twin City Fan laboratory tests, the system was determined to be accurate within +/-5%.

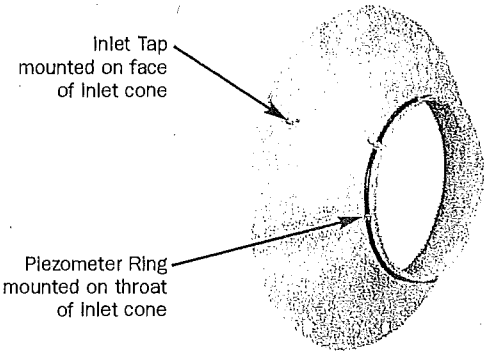

How it Works

The System is based on the principle of a flow nozzle. The inlet cone of the fan is used as the flow nozzle, and the flow can be calculated by measuring the static pressure drop through the inlet cone.

The pressure drop is measured from the tap located on the face of the inlet cone to the piezometer ring in the throat. The inlet tap is connected to the high-pressure side of the transducer and the piezometer ring is connected to the low-pressure side (see diagram at right).

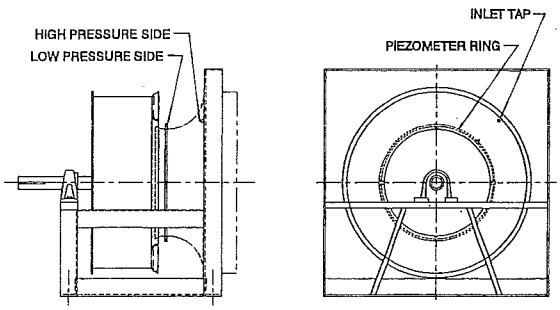

Demonstration

Shown below is a Twin City Fan model 165 BCV fitted with a Piezometer Ring Airflow Measuring System, operating at 1100 RPM. With an unobstructed inlet, the digital display indicates the fan is producing 1713 CFM, which closely matches rated performance (see photo A). After placing an obstruction in the inlet, the airflow is reduced to 1597 CFM (see photo B).

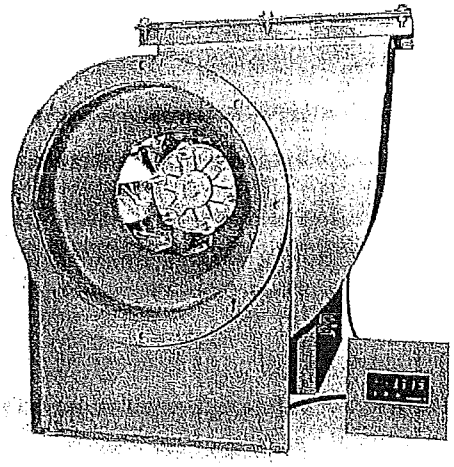

A. Fan operating with unobstructed inlet produces 1713 CFM

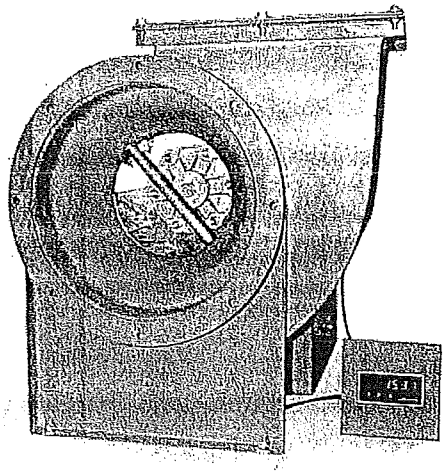

B. Fan operating with obstructed inlet produces 1597 CFM

Fans & Blowers
Twin City

Twin City Fan & Blower

INSTALLATION, OPERATION & MAINTENANCE MANUAL

Airflow Measuring System Using Piezometer Ring

ENGINEERING SUPPLEMENT

ES-105

Issue Date: 1-1-05
Rev. Date: 3-3-09

Twin City Fan now offers an air measuring device as an option on centrifugal fans. It is based on the principle of a flow nozzle. The inlet cone of the fan is used as the flow nozzle. By measuring the pressure drop through the inlet cone, the flow can be calculated. The system consists of a piezometer ring mounted in the throat and a static pressure tap mounted on the face of the inlet cone. A differential pressure transducer and a digital display can be provided. The display must be capable of performing the square root function in order to read out in CFM directly. By testing fans in the laboratory, Twin City Fan was able to determine flow coefficients for various fan types. The flow coefficients were combined to give the equations listed below by fan type. Based on testing performed in Twin City Fan's laboratory, the accuracy of the system was determined to be +/- 5%.

The pressure drop is measured from the tap located on the face of the funnel to the piezometer ring in the throat. The inlet tap is connected to the high-pressure side of the transducer and the piezometer ring is connected to the low-pressure side.

Measurement of Airflow

The equations below are accurate for flow estimation for flows from 40% to 100% of wide-open volume. According to testing done previously at Twin City Fan, several factors affect the accuracy of this method of determining flow. The equations below assume the following:

- There are no vanes or other obstructions in or near the inlet
- Even flow entering the funnel (no pre-swirl)
- Standard wheel to inlet cone overlap
- Accurate determination of air density at the inlet
- Free inlet (consult Twin City Fan for ducted inlet factors)

Non-Standard Density Method

One of the following equations is used to measure the flow:

$$ACFM = C1 * A * \sqrt{(\Delta P / \rho)}$$

where:
- A = Actual inlet funnel throat area (square feet) - from tables on page 2
- ΔP = The differential in static pressure from the piezometer ring and the front pressure tap (inches w.g.)
- ρ = Air density (pounds mass/cubic foot)
- C1 = Value from Table 1 below

Standard Density Method

The equations can be simplified by assuming standard density and assuming funnel dimensions match drawing dimensions. The following tables show the factor (F) for each fan size and type. The equation then becomes the following:

For standard air (ρ = 0.075 lb/ft3):

$$ACFM = F \sqrt{\Delta P}$$

where:
- F = factor from tables on page 2
- ΔP = The differential in static pressure from the piezometer ring and the front pressure tap (inches w.g.)

Table 1: C1 Values

Product	C1 Free Inlet	C1* Ducted Inlet
EPFN/EPQN (Arr. 1 or 4), Sizes 122-165	753.06	794.06
EPFN/EPQN (Arr. 1 or 4), Sizes 182-982	692.03	740.14
EPF/EPQ (Arr. 3), Sizes 122-165	726.39	765.94
EPF/EPQ (Arr. 3), Sizes 182-982	667.52	713.93
APF/APQ	753.06	794.06
BC/BCS/BAF SWSI	735.42	786.56
BC/BCS/BAF DWDI	1470.84	1573.12
TSL	735.42	753.56
QSL	696.00	735.83
BAE-SW **	720.4	735.8
BAE-DW**	1440.8	1471.6

* Values for ducted C1 factors are based on duct diameter matching standard inlet collar diameter.

** BAE sizes smaller than 182 use BC\BCS\BAF Factors.

©2009 Twin City Fan Companies, Ltd.

Table 2: EPF/EPQ (Arrangement 3) and EPFN/EPQN (Arrangement 1 & 4)

Size	EPF/EPQ Free Inlet F	EPFN/EPQN Free Inlet F	EPF/EPQ Ducted Inlet F	EPFN/EPQN Ducted Inlet F	A
122	911.46	944.92	961.07	996.36	0.344
150	1163.68	1206.40	1227.04	1272.08	0.439
165	1464.80	1518.58	1544.56	1601.26	0.552
182	1757.39	1821.92	1879.58	1948.58	0.721
200	2108.38	2185.80	2254.97	2337.76	0.865
222	2617.81	2713.93	2799.81	2902.60	1.074
245	3168.67	3285.02	3388.97	3513.39	1.300
270	3856.03	3997.61	4124.12	4275.53	1.582
300	4770.07	4945.21	5101.71	5289.01	1.957
330	5757.23	5968.62	6157.51	6383.56	2.362
365	7032.01	7290.21	7520.92	7797.03	2.885
402	8555.41	8869.55	9150.23	9486.16	3.510
445	10444.42	10827.92	11170.58	11580.68	4.285
490	12669.80	13135.01	13550.69	14048.16	5.198
542	15541.11	16111.75	16621.62	17231.84	6.376
600	19004.71	19702.52	20326.03	21072.24	7.797
660	22994.79	23839.12	24593.53	25496.41	9.434
730	28128.04	29160.84	30083.67	31188.11	11.54

Table 4: BC/BCS/BAF

Size	SWSI Free Inlet F	DWDI Free Inlet F	SWSI Ducted Inlet F	DWDI Ducted Inlet F	A
105	641.87	1283.74	686.51	1373.01	0.239
122	872.90	1745.81	933.61	1867.21	0.325
135	1058.21	2116.41	1131.79	2263.58	0.394
150	1305.20	2610.39	1395.96	2791.92	0.486
165	1587.21	3174.41	1697.58	3395.16	0.591
182	1936.99	3873.98	2071.69	4143.38	0.721
200	2321.58	4643.16	2483.02	4966.04	0.865
222	2883.02	5766.04	3083.50	6167.00	1.074
245	3491.62	6983.24	3734.42	7468.84	1.300
270	4247.77	8495.55	4543.16	9086.32	1.582
300	5254.03	10508.05	5619.38	11238.86	1.957
330	6342.73	12685.46	6783.80	13567.59	2.362
365	7747.97	15495.94	8286.75	16573.50	2.885
402	9426.99	18853.98	10082.53	20165.06	3.510
445	11507.43	23014.86	12307.64	24615.28	4.285
490	13957.43	27914.86	14928.01	29856.02	5.198
542	17121.05	34242.10	18311.62	36623.24	6.376
600	20938.50	41877.00	22394.53	44789.06	7.797
660	25334.37	50668.73	27096.08	54192.16	9.434
730	30991.88	61983.75	33147.00	66294.01	11.54
807	37901.44	75802.87	40537.05	81074.09	14.11
890	46079.00	92158.01	49283.27	98566.54	17.16
982	56192.01	112384.00	60099.52	120199.04	20.93

Table 3: APF/APQ

Size	Free Inlet F	Ducted Inlet F	A
121	944.92	996.36	0.344
141	1206.40	1272.08	0.439
161	1518.58	1601.26	0.552
181	1929.92	2035.00	0.702
201	2378.68	2508.19	0.865
221	2979.06	3141.26	1.083
251	3779.67	3985.45	1.375
281	4792.02	5052.92	1.743
321	6093.21	6424.95	2.216
351	7719.69	8139.98	2.807
391	9514.73	10032.75	3.460
441	11916.25	12565.02	4.334
491	14881.53	15691.74	5.412
551	18668.71	19685.12	6.789
631	24372.82	25699.79	8.864
711	30836.22	32515.09	11.21
791	38058.92	40131.02	13.84

Table 5: QSL

Size	Free Inlet F	Ducted Inlet F	A
150	1832.36	1937.23	0.721
165	2198.32	2324.14	0.865
182	2729.48	2885.70	1.074
200	3303.84	3492.93	1.300
222	4020.52	4250.63	1.582
245	4973.55	5258.21	1.957
270	6002.82	6346.39	2.362
300	7331.98	7751.62	2.885
330	8920.36	9430.92	3.510
365	10889.96	11513.24	4.285
402	13210.27	13966.36	5.198
445	16204.06	17131.49	6.376
490	19815.41	20949.54	7.797
542	23975.70	25347.94	9.434
600	29327.92	31006.49	11.54
660	35859.36	37911.75	14.11
730	43610.67	46106.71	17.16

Table 6: TSL

Size	Free Inlet F	Ducted Inlet F	A
122	872.75	894.27	0.325
150	1305.09	1337.28	0.486
165	1587.06	1626.20	0.591
182	1936.15	1983.91	0.721
200	2322.85	2380.14	0.865
222	2884.09	2955.23	1.074
245	3490.99	3577.10	1.300
270	4248.26	4353.05	1.582
300	5255.28	5384.90	1.957
330	6342.85	6499.31	2.362
365	7747.30	7938.40	2.885
402	9425.66	9658.16	3.510
445	11506.83	11790.66	4.285
490	13958.57	14302.88	5.198
542	17121.95	17544.28	6.376
600	20937.86	21454.32	7.797
660	25333.82	25958.71	9.434
730	30989.22	31753.60	11.54
807	37890.63	38825.25	14.11
890	46081.02	47217.66	17.16

Table 7: BAE-SW/BAE-DW

(Sizes smaller than 182 use Table 4: BC\BSC\BAF)

Size	SWSI Free Inlet F	DWDI Free Inlet F	SWSI Ducted Inlet F	DWDI Ducted Inlet F	A
182	1896.61	3793.22	1937.16	3874.31	0.721
200	2275.41	4550.82	2324.05	4648.10	0.865
222	2825.19	5650.38	2885.58	5771.16	1.074
245	3419.69	6839.38	3492.79	6985.58	1.300
270	4161.50	8322.99	4250.46	8500.91	1.582
300	5147.95	10295.89	5257.99	10515.99	1.957
330	6213.31	12426.62	6346.13	12692.26	2.362
365	7589.08	15178.15	7751.31	15502.62	2.885
402	9233.16	18466.31	9430.53	18861.07	3.510
445	11271.82	22543.63	11512.77	23025.55	4.285
490	13673.49	27346.98	13965.79	27931.57	5.198
542	16772.25	33544.50	17130.79	34261.59	6.376
600	20510.23	41020.47	20948.68	41897.36	7.797
660	24816.41	49632.82	25346.91	50693.82	9.434
730	30356.30	60712.61	31005.23	62010.46	11.540
807	37116.76	74233.52	37910.21	75820.42	14.110
890	45139.88	90279.75	46104.83	92209.66	17.160
982	55056.97	110113.94	56233.92	112467.85	20.930

Transducer Sizing for Piezometer Ring

Selecting a pressure transducer with the appropriate range is critical in order to get accurate measurements using the piezometer ring. Since most transducers list accuracy as a percent of full scale, if the range selected is too high, this can have a significant impact on the accuracy of the flow measurement. If the range is too low, there is risk of damaging the instrument and/or getting inaccurate readings or no reading at all.

The following steps are for sizing the pressure transducer for use with the piezometer ring flow measurement system:

1. Determine the maximum flow rate in CFM that the fan is expected to produce. This maximum should be the greater of normal, maximum, and/or emergency conditions.
2. Find the formula for calculating the actual flow rate from page 1 of this document for the corresponding size and type of fan being used.
3. Calculate the pressure drop corresponding to the maximum flow rate determined in Step 1.
4. Select the pressure transducer with the smallest range that includes the pressure drop calculated in Step 3.
5. Now take the maximum range from the pressure transducer selected in Step 4 and use that to calculate the maximum flow rate that could be measured with this transducer.
6. Determine an acceptable safety factor for sizing the transducer.
7. Multiply the maximum flow rate from Step 1 by the safety factor. If the maximum flow rate from Step 5 is less than the result, bump up the transducer to the next largest size. Otherwise, the transducer from Step 4 should be used.

Example:
Company XYZ has a size 270 BC SWSI fan to be installed with design conditions of 12,000 CFM at 5 inches w.g. and standard density. What size transducer should be used?

1. After speaking to the design engineer, it was determined that 12,000 CFM is the actual maximum and most of the time the fan will be running closer to 10,000 CFM. Therefore, 12,000 CFM will be used for the calculations.
2. The calculation for this fan type and size is:
   $ACFM = 4247.77 * \sqrt{(\Delta P)}$ for standard density
   Note that if the density was other than standard air, the formula would be different.
3. By rearranging the formula in Step 2, the following formula is obtained:
   $\Delta P = (ACFM/4247.77)^2$
   so, $\Delta P = (12000/4247.77)^2 = 7.98$ inches w.g.
4. For the pressure transducer models being considered, the ranges are 0-3, 0-6, 0-10, and 0-20. Therefore, for this flow rate the transducer model is the 0-10 inches w.g. model.
5. The maximum for this transducer is 10 inches, which corresponds to the following flow rate:
   $ACFM = 4247.77 * \sqrt{(10)} = 13433$ CFM
6. Since 12,000 CFM is the maximum and normal operating conditions are 10,000 CFM, a 10% safety factor should be plenty for this application
7. From step 1, 12000 CFM * 1.1 = 13200 CFM. This is less than 13433 CFM, so the 0-10 inch pressure transducer is acceptable.

3
Motors

	No.:
	Date: 6/23/2011

DATA SHEET
Three-phase induction motor - Squirrel cage rotor

Customer	:
Product line	: W22 NEMA Premium

Frame	: 364/5T
Output	: 75 HP
Frequency	: 60 Hz
Poles	: 4
Full load speed	: 1775
Slip	: 1.39 %
Voltage	: 208-230/460 V
Rated current	: 186-168/84.1 A
Locked rotor current	: 1180/589 A
Locked rotor current (Il/In)	: 7.0
No-load current	: 70.0/35.0 A
Full load torque	: 219 lb.ft
Locked rotor torque	: 240 %
Breakdown torque	: 260 %
Design	: B
Insulation class	: F
Temperature rise	: 80 K
Locked rotor time	: 14 s (hot)
Service factor	: 1.25
Duty cycle	: S1
Ambient temperature	: -20°C - +40°C
Altitude	: 1000 m
Degree of Protection	: IP55
Approximate weight	: 919 lb
Moment of inertia	: 23.251 sq.ft.lb
Noise level	: 67 dB(A)

	D.E.	N.D.E.
Bearings	6314 C3	6314 C3
Regreasing interval	12000 h	12000 h
Grease amount	27 g	27 g

Load	Power factor	Efficiency (%)
100%	0.86	95.4
75%	0.82	95.0
50%	0.73	94.5

Notes:

Performed by:	Checked:

	No.:
	Date: 6/23/2011

PERFORMANCE CURVES RELATED TO RATED OUTPUT

Three-phase induction motor - Squirrel cage rotor

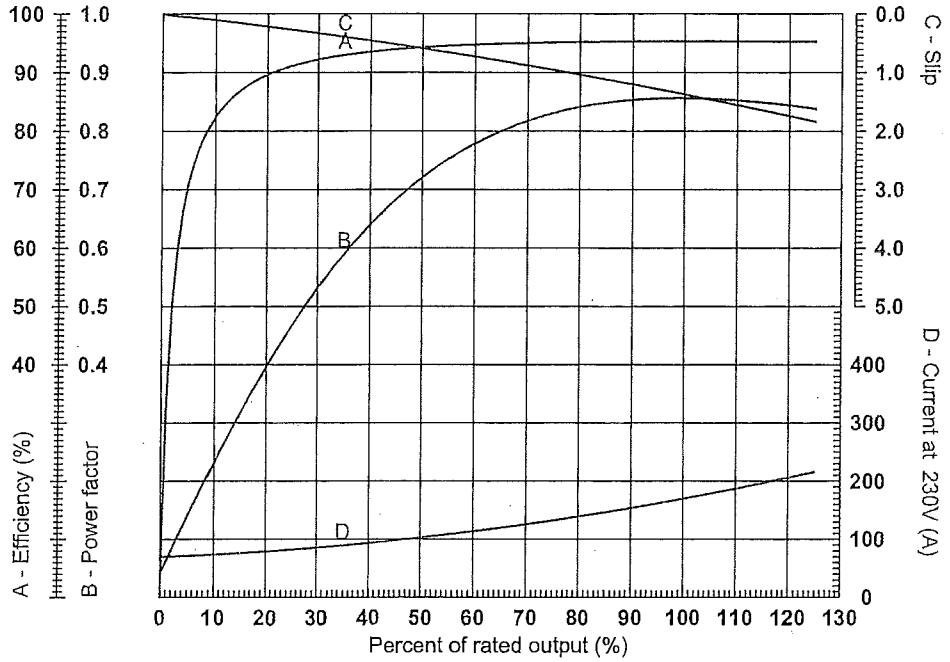

Customer	:
Product line	: W22 NEMA Premium

Output	: 75 HP	Locked rotor current (Il/In)	: 7.0
Frame	: 364/5T	Duty cycle	: S1
Full load speed	: 1775	Service factor	: 1.25
Frequency	: 60 Hz	Design	: B
Voltage	: 208-230/460 V	Locked rotor torque	: 240 %
Insulation class	: F	Breakdown torque	: 260 %
Rated current	: 186-168/84.1 A		

Notes:

Performed by:	Checked:

	No.:
	Date: 6/23/2011

CHARACTERISTIC CURVES RELATED TO SPEED

Three-phase induction motor - Squirrel cage rotor

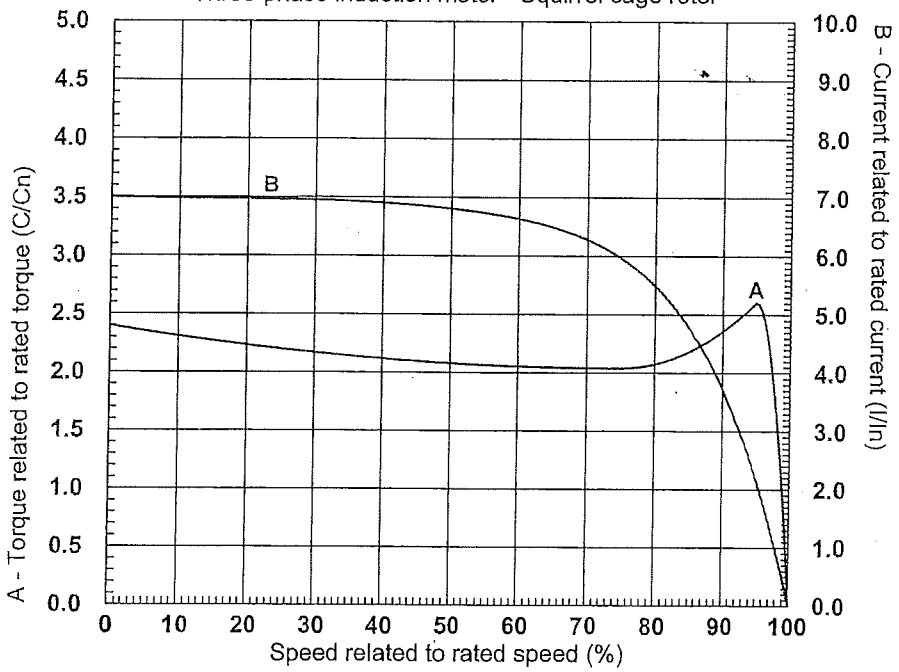

Customer	:
Product line	: W22 NEMA Premium

Output	: 75 HP	Locked rotor current (Il/In)	: 7.0
Frame	: 364/5T	Duty cycle	: S1
Full load speed	: 1775	Service factor	: 1.25
Frequency	: 60 Hz	Design	: B
Voltage	: 208-230/460 V	Locked rotor torque	: 240 %
Insulation class	: F	Breakdown torque	: 260 %
Rated current	: 186-168/84.1 A		

Notes:

Performed by:	Checked:

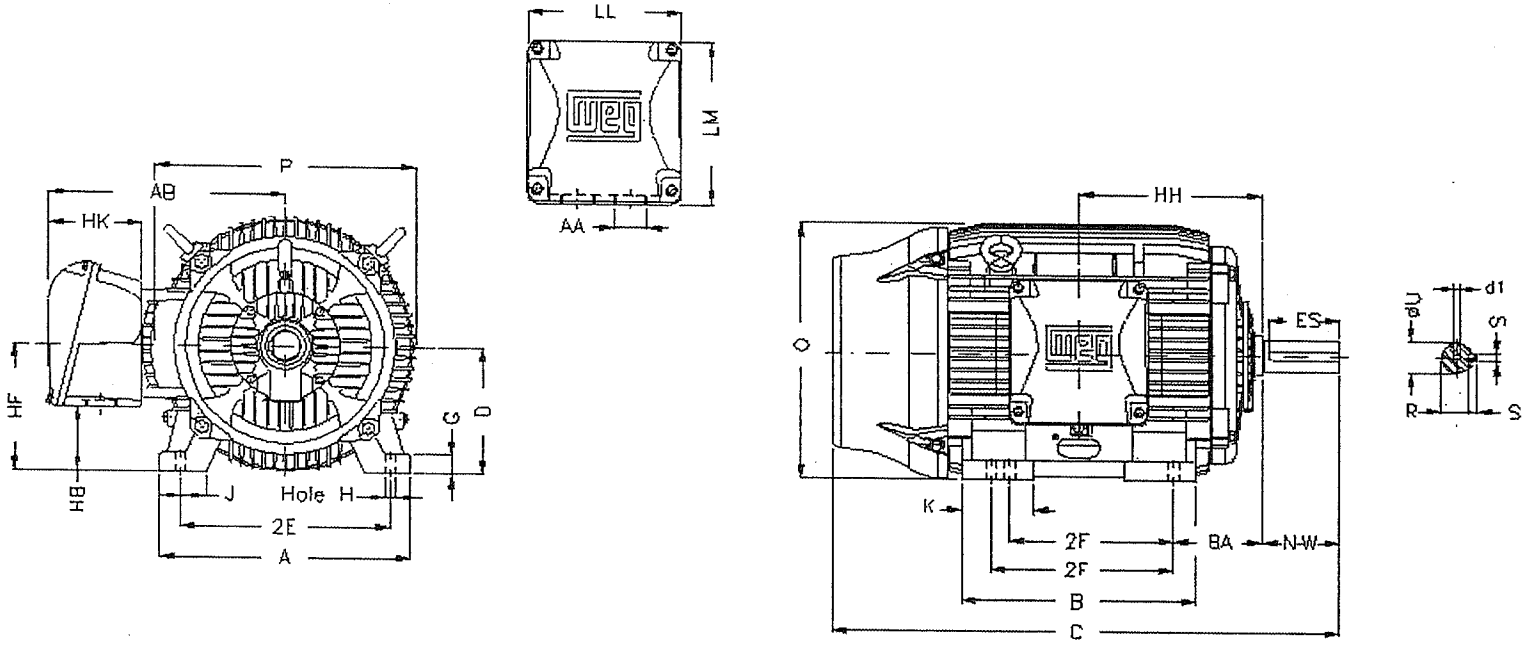

2E 14.016	J 3.150	A 17.165	P 17.914	AB 16.378	Notes:
2F 11.260/12.244	K 4.921	B 16.220	BA 5.875	U 2.375	Performed by:
N-W 5.874	ES 4.330	S 0.625	R 2.019	depth 0.625	Checked:
D 9.000	G 1.480	HB 4.055	O 17.957	T 3.578	Customer:
HH 12.362	HK 6.378	H 0.660	C 34.251	LL 9.646	W22 NEMA Premium
LM 10.119	AA NPT 3"	d1 DUNC 3/4"-10	d2 DUNC 3/4"-10	Flange FD-406	Three-phase induction motor Frame 364/5T - IP55
AJ 16.000	AK 14.000	BD 17.71	BF 0.828	BB 0.203	6/23/2011

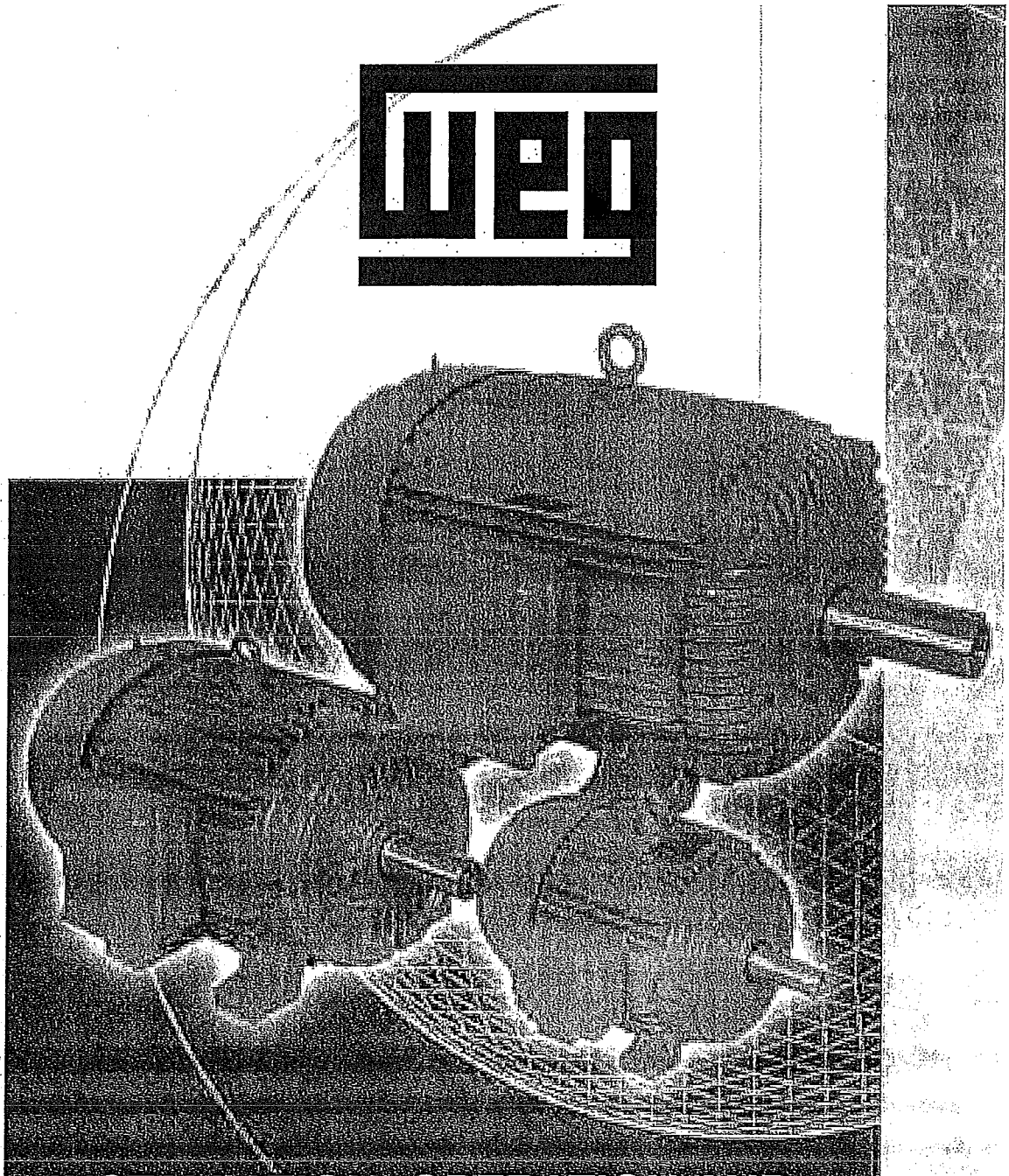

INSTALLATION, OPERATION AND MAINTENANCE INSTRUCTION MANUAL FOR INDUCTION MOTORS

Frame sizes 143/5T to 586/7 (02 - 21)

MANUAL DE INSTALACION, OPERACION Y MANTENIMIENTO PARA MOTORES DE INDUCCION

Carcasas 143/5t hasta 586/7 (23 - 43)

THIS MANUAL IS INTENDED TO SUPPLY IMPORTANT TOPICS THAT MUST BE FOLLOWED DURING TRANSPORTATION, INSTALLATION, OPERATION AND MAINTENANCE OF WEG MOTORS. THEREFORE, WE RECOMMEND READING CAREFULLY THIS MANUAL BEFORE INSTALLING AND OPERATING THE MOTOR. TO ENSURE PHYSICAL INTEGRITY TO THE OPERATION AND MATERIAL PROTECTION, ALL INFORMATION INCLUDED IN THIS MANUAL MUST BE STRICTLY FOLLOWED.

INDEX

1. HANDLING AND TRANSPORTATION	3
2. RECEIVING INSPECTION	3
3. STORAGE	4
4. INSTALLATION	6
4.1 - Safety	6
4.2 - Operating Conditions	7
4.3 - Foundation	7
4.4 - Drain Holes	8
4.5 - Balance	8
4.6 - Alignment	8
4.7 - Couplings	10
4.8 - Electrical Connection	10
4.9 - Starting Methods	11
4.10 - Protection Device	12
4.11 - Start-Up	12
5. MAINTENANCE	13
5.1 - Lubrication	13
5.1.1 - Machines without Grease Nipples	14
5.1.2 - Machines Fitted with Grease Fitting	14
5.1.3 - Compatibility of MOBIL Polirex EM grease with other types of grease	16
5.2 - Assembly and Disassembly	16
6. SPARE PARTS	17
7. VARIABLE FREQUENCY DRIVE MOTORS	17
7.1 - Standard Motors	17
7.2 - Inverter Duty Motors	18
7.3 - Bearing Insulation	18
8. ADDITIONAL INSTRUCTIONS	19
8.1 - Hazardous Area Motors	19
8.1.1 - General	19
8.1.2 - Installation	19
8.1.3 - Checking and maintenance	20
8.1.4 - Explosion Proof Motor Repairs	20
9. WARRANTY TERMS	21

1 - HANDLING AND TRANSPORTATION

MOTORS MUST NOT BE LIFTED BY THE SHAFT, BUT BY THE EYEBOLTS SPECIFIC FOR SUCH PURPOSE

Lifting devices, when supplied, are designed only to support the motor. If the motor has two lifting devices then a double chain must be used to lift it.
Lifting and lowering must be done gently without any shocks, to avoid bearing damaged.

DURING TRANSPORTATION, MOTORS FITTED WITH ROLLER OR ANGULAR CONTACT BEARINGS ARE PROTECTED AGAINST BEARING DAMAGES WITH A SHAFT LOCKING DEVICE

THIS LOCKING DEVICE MUST BE USED ON ANY FURTHER MOTOR TRANSPORTATION, EVEN WHEN THIS MEANS TO UNCOUPLE THE MOTOR FROM THE DRIVEN MACHINE

2. RECEIVING INSPECTION

When receiving the motor, check if any damage has occurred during transportation.

If anything has been noticed, notify immediately the carrier, the insurance company and WEG.
Failure in giving notice to the carrier, to the insurance company and to WEG may result in loosing product warranty.

Do not remove the existing protecting grease from the shaft end, nor the stoppers or plugs that close the terminal box holes, if any. These protection items must be kept in place until the final installation has been concluded.
After being removed from the package, a complete visual inspection on the motor should be made:

✓ Check if any damage has occurred during transportation.
✓ Check nameplate data.
✓ Rotate shaft with the hand to make sure it is turning freely.
✓ Make sure the motor was not exposed to excessive dirt and moisture during transportation and storage.

3 - STORAGE

If motors are not immediately installed, they must be stored in dry areas, free of dust, vibrations, gases, corrosive smokes, under constant temperature and in normal position free from other materials.

Motor storage temperature must remain between 41°F (5°C) to 140°F (60°C), with relative humidity not exceeding 50%.

If motors are stored for more than two years, bearings must be replaced or the lubrication grease must be totally removed after cleaning.

Single-phase motors when kept in stock for 2 years or more must have their capacitors replaced (if any).

WEG recommends to rotate the shaft (by hands) at least once a month, and to measure the insulation resistance before installing it, if motors are stored for more than 6 months or when subject to high humidity areas.

If motor is fitted with space heaters, it is recommended to switch them on during storage period if the relative humidity exceeds 50%.
If motor remains in stock for a long period without having the space heaters switched-on or when installed but not in operation, moisture/water inside the motor may condense. On these cases, water must be drained by removing the drain plugs. When drainage is done, switch-on the space heaters and make sure the motor is completely dry, then reinstall the drain plugs to ensure proper Degree of Protection (see figure 1).

The space heaters should NEVER be energized while motor is running.

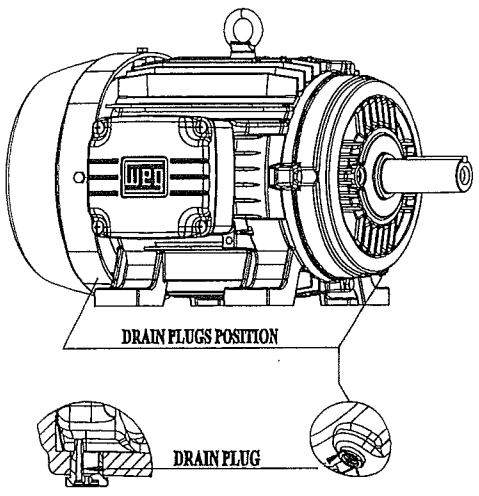

Picture 1

Insulation Resistance Checking

Disconnect motor from power supply before making any insulation resistance measurement.
To avoid electric discharge risks, discharge the terminals right after performing the measurement.

Measure the insulation resistance before operating the motor and/or when there is any sign of moisture in the winding.

The resistance measured at 77°F (25°C) must be:

$Ri \geq (20 \times U) / (1000 + 2P)$ [MΩ]
(measured with a MEGGER at 500 V d.c.)
where U = voltage (V); P = power (kW).

If the insulation resistance detected is less than 5 mega ohms, the winding must be dried according to the following procedure: Warm it up in an oven at a minimum temperature of 176°F (80°C) increasing 41°F (5°C) every hour until reaching 105°C (221°F), remaining under this temperature for at least one hour.

Check if the stator insulation resistance remains constant within accepted values. If not, stator must be reimpregnated. If necessary, replace bearings and seals.

Note:
1) All drains (if any) must be removed while drying.
2 - Measured the insulation resistance in ambient temperature. If different than 25°C it should be corrected using the following formula:

$$R_{(25°C)} = [(K+25) / (K + T_a)] . R_{(Ta)}$$

Where:
$R_{(25°C)}$ insulation resistance related to 25°C ambient temperature
K constant value 234.5 for copper
T_a ambient temperature where the resistance was measured
$R_{(Ta)}$ resistance value measured in ambient temperature T_a

4. INSTALLATION

4.1 - Safety

All personnel involved with electrical installations, either handling, lifting, operation, start up, maintenance or repair must be well informed and updated concerning safety standards and principles that govern the work and carefully follow them.

For practical reasons, it is not possible to include in this Manual detailed information that covers all constructive variables, nor covering all possible assembly, operation or maintenance alternatives.
For this reason, the present Manual only includes required information that allows qualified and trained personnel to carry out the work.

If you still have further doubts about this, specially in reference to specific product information, WEG is willing to provide such information via its network of authorized service agents and/or distributors.
In order to allow WEG to provide prompt service, within technical standards, the motor serial number that is available on the identification nameplate should be supplied.

Use always appropriate tools for installation and removal.

MAKE SURE THAT ELECTRIC MOTORS ARE SWITCHED OFF BEFORE STARTING ANY MAINTENANCE SERVICE

All rotating parts such as pulleys, couplings, outside fans, shaft, etc. must be protected against accidental contact.
Motors must be protected against unexpected starts.
When performing any maintenance service, disconnect the motor from the power supply. Make sure all accessories have been switched off and disconnected.
In order to prevent from penetrating dust and/or water into the terminal box, cable glands or threaded pipe in the lead holes passage must be installed. They must be of equal or higher IP rating than the motor.

LEAD CONNECTION INSULATION INSIDE THE TERMINAL BOX MUST BE DONE WITH AN INSULATING MATERIAL COMPATIBLE WITH MOTOR THERMAL CLASS WHICH IS SHOWN ON THE MOTOR NAMEPLATE

If installation and safety instructions are not followed accordingly, warranty may be void.

4.2 - Operating Conditions

In general electric motors are designed for operation up to an altitude of 1000m above sea level for an ambient temperature ranging from -4°F (-20°C) to 104°F (40°C). Any variation is stated on the nameplate.
The recommended installation distance between air inlet from the motor and the wall should be at least ¼ of the air inlet diameter. A person should have enough room to carry out cleaning services.
Machines that are cooled with ambient air, air inlet screens must be cleaned at regular intervals so as to ensure free air circulation.
Warm air can not return to the motor.
✓ For vertically mounted motors with air inlet on top, the air opening must be protected by a proper cover so as to avoid dropping of foreign materials on the motors.
✓ Considering that direct sun heat causes increase in temperature, externally installed motors should be always protected against weathering.

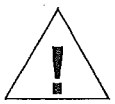

COMPARE THE CURRENT, VOLTAGE, FREQUENCY, SPEED, OUTPUT AND OTHER VALUES REQUIRED BY THE APPLICATION WITH MOTOR NAMEPLATE INFORMATION

ODP MOTORS – Open motors (IP21, IP23) are machines designed for operation in clean, dry areas, with enough air circulation for proper cooling. These motors should never be used in areas with flammable materials. Open motors may cause sparks and release cast particles under any eventual insulation failure (short-circuit).
TEFC MOTORS – Totally enclosed motors are machines suitable to operate in areas with moisture, dirt and/or corrosive materials either in enclosed or open environments.

4.3 - Foundation

Motors provided with feet must be installed on solid foundations to avoid excessive vibrations.
All motors must be fully fixed and aligned.
The purchaser is fully responsible for the foundation.
Metal parts must be painted to avoid corrosion.

The foundation must be uniform and sufficiently strong to support any shock. It must be designed in such a way to stop any vibration originated from resonance.

Note: Considering that rotation direction is important for correct operation, then check it carefully before connecting motor to the load.

4.4 - Drain Holes

Make sure drains are placed at the lower motor position when the mounting configuration differs from that specified on the motor purchase order.

4.5 – Balance

WHEN SPECIAL BALANCE IS REQUIRED, CONTACT THE FACTORY

All motors are dynamically balanced at the factory with half key.

Transmission elements such as pulleys, couplings etc must be dynamically balanced with half key before installation.

Always use appropriate tools for installation and removal.

4.6 – Alignment

ALIGN THE SHAFT ENDS AND USE FLEXIBLE COUPLING, WHENEVER POSSIBLE

Make sure that the motor mounting devices do not allow modifications on the alignment and further damages to the bearings.
When assembling a half-coupling, make sure to use suitable equipment and tools to protect the bearings.
Suitable assembly of half-coupling:
Specially in cases of direct couplings, motor shaft must be aligned axially and radially with the driven machine shaft.

Incorrect alignment can lead to bearing damage, vibrations or even cause shaft rupture.
Correct alignment can be ensured with the use of dial gauges, as shown in figures 4.6.1, 4.6.2 and 4.6.3.

If considering a complete shaft turn, misalignment should not exceed 0.05 mm.

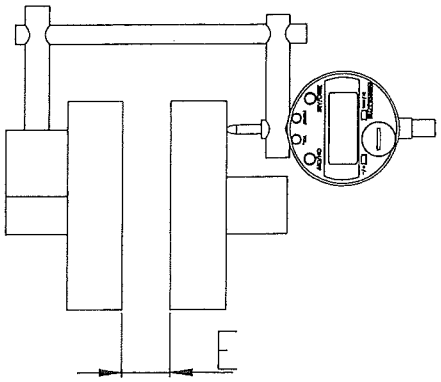

Fig. 4.6.1 - Axial reading (parallelism)

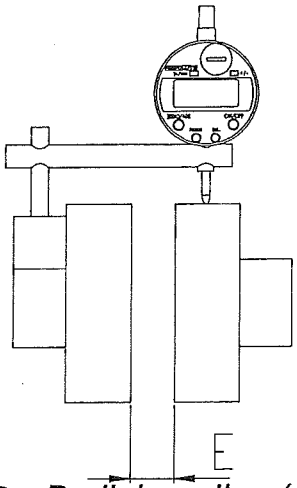

Fig. 4.6.2 – Radial reading (concentricity)

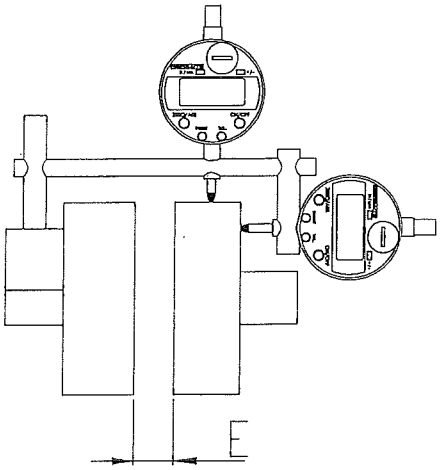

Fig. 4.6.3 – Axial and radial reading combined

The axial alignment ("E" dimension) between half couplings should be performed in accordance with manufacturer's recommendations.

If required, WEG can offer its personnel duly trained as well as a laser equipment to make motor and driven machine alignment/leveling.

Expansion effect of the components may change the alignment/ leveling conditions during performance.

4.7 – Couplings

When using pulley or belt drive (coupling), follow the instruction given below:

Remove shaft-locking device (if any) before installing the motor.

Belts must be tighten just enough to avoid slippage when running, according to the specifications stated on the belt supplier recommendation.

To make the installation of the pulley on the shaft easier, it is recommended to heat up the pulley at 176°F (80°C) and have it mounted at hot, using suitable tools.

To avoid bearing and shaft end damage, mounting and dismounting of pulleys must be made with suitable tools.

While mounting and dismounting a pulley, never make pressure or knocks on the bearings.

Always use flexible couplings; rigid couplings require special bearing arrangement as well as axial and radial alignment of the shafts.

WARNING:
EXCESSIVE BELT/CHAIN TENSION WILL DAMAGE THE BEARINGS AND LEAD TO A PROBABLE SHAFT RUPTURE

The couplings used must be suitable to withstand radial and axial vibrations during operation. Special care must be taken to avoid that the allowable load and speed limits given in the catalog are not exceeded.

4.8 – Electrical Connection

Make sure the motor is connected to the correct power supply.
The cable gauges and the protection devices must be designed based on motor rated current.

Voltage may be connected at motor standstill inside the terminal box for heating elements or direct winding heating

The capacitor on single-phase motors can retain a charge which appears across the motor terminals, even when the motor has reached standstill condition. So, avoid touching them at such condition

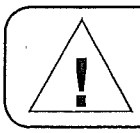

A WRONG CONNECTION CAN BURN OUT THE MOTOR.

Voltage and connection are indicated on the motor nameplate.
The acceptable voltage variation is ±10%;
the acceptable frequency variation is ±5% and the total acceptable variation for voltage and frequency is ± 10%.
Note: For rated voltage range (Tru Metric Line), the acceptable variation is ± 5% according to IEC 60034-1.

4.9 - Starting Methods

The motor is rather started through direct starting. In case this is not possible, use compatible start methods to the motor load and voltage.
When applying reduced voltage-starting method, remember that the starting torque will also reduce.

✓ 3 leads single voltage and 9 leads dual voltage motors can be started as follows:
- Full Voltage Direct online
- Auto-Transformer starting
- Electronic Soft-Starting
- VFD Starting – subject to verification and application analisys.
- Series - Parallel starting (only for 9 leads)

✓ 6 leads single and dual voltage motors and 12 leads dual voltage motors can be connected as follows:
- Full Voltage Direct online
- WYE/DELTA starting
- Auto-Transformer starting
- Electronic Soft-Starting
- VFD Starting – subject to verification and application analisys.
- Series - Parallel starting (only for 12 leads)

Rotation direction is clockwise when motor is viewed from Drive Endshields side and if the phases are connected according to sequence L1, L2, L3. This sequence and power system must be positive.

To change the rotation direction, reverse two of the connecting leads.
Note: For single-phase motors connections, please check the motor nameplate.

THE CONNECTION TO THE POWER SUPPLY MUST BE DONE BY QUALIFIED PERSONNEL AND WITH FULL ATTENTION TO ASSURE SAFE AND PERMANENT CONNECTION. AFTER CONNECTING THE MOTOR, CHECK FOR ANY STRANGE BODY INSIDE THE TERMINAL BOX. THE CABLE INLETS NOT IN USE MUST BE CLOSED.

Make sure to use correct cable gauge, based on the rated current stamped on the motor nameplate.

BEFORE ENERGIZING THE TERMINALS, CHECK IF THE GROUNDING IS MADE ACCORDING TO THE APPLICABLE STANDARDS. THIS IS ESSENTIAL TO AVOID ACCIDENTS.

4.10 – Protection Device

When the motor is supplied with protective or monitor temperature device such as thermostats, thermistors, thermal protector etc, connect their terminals to the corresponding devices on the control panel. If this procedure is not followed accordingly, warranty will be void.
Do not change protection devices settings as they may not operate.

Protection Device Diagram

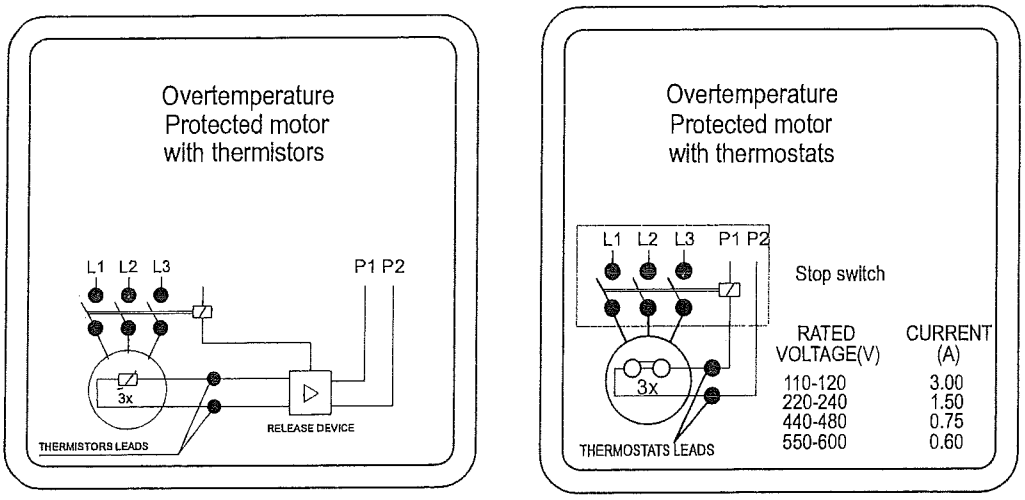

4.11 - Start-Up

IF THE MOTOR IS RUN BARE SHAFT, THE KEY MUST BE FASTENED OR REMOVED BEFORE STARTING.

a) The motor must start and operate smoothly. In case this does not occur, turn it off and check all connections and the mounting before starting it again.

b) In case there is excessive vibration, check if the fixing screws are correctly fastened.
Check also if the vibration comes from a neighbor machine.
Periodical vibration check must be done.

c) Run the motor under rated load for a short period of time and compare if the running current is in accordance to the nameplate current.

5 . MAINTENANCE

Any service on electric machines should only be carried out when it is completely stopped and all phases disconnected from the power supply.

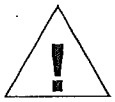

WARNING:
SAFETY CHECK LIST

General Inspection
✓ Check motor periodically.
✓ Keep motor clean and ensure free air flow.
✓ Check seals and replace them, if required.
✓ Check connections as well as supporting screws.
✓ Check bearing condition and pay attention to: Any excessive noise, vibration, bearing temperature and grease condition.
✓ When a change, under normal conditions is detected, check the motor and replace required parts.

DO NOT REUSE DAMAGED OR WORN PARTS. REPLACE THEM BY NEW ONES SUPPLIED BY THE FACTORY

Periodical inspection depends on motor type and on application conditions.

5.1 – Lubrication

FOLLOW REGREASING INTERVALS. THIS IS FUNDAMENTAL FOR PROPER MOTOR OPERATION

5.1.1 - Machines without Grease Nipples

Motors up to frame size 215T are normally fitted without grease fittings. In these cases the regreasing shall be done during preventive maintenance service paying attention to the following aspects:

✓ Take motor apart carefully.
✓ Take all the grease out.
✓ Wash the bearing with kerosene or diesel.
✓ Dry the bearings
✓ Regrease the bearing immediately.

5.1.2 - Motors Fitted with Grease Fitting

It is strongly recommended to grease the machine while running. This allows the grease renewal in the bearing housing. When this is not possible due to rotating parts by the grease device (pulleys, bushing, etc) that offer some risk to physical integrity of the operator, proceed as follows:

✓ Clean the area near the grease nipple.
✓ Put approximately half of the total grease and run the motor for 1 minute at full speed.
Then turn off the motor and pump in the rest of the grease.
✓ The injection of all the grease with the motor in standstill can make the grease penetrate into the motor, through the bearing housing inner seal.
Inspections intervals depend on motor type and on application conditions.

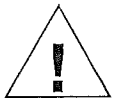

USE ONLY MANUAL GREASE GUN FOR LUBRICATION

RECOMMENDED RELUBRICATION INTERVALS – POLYREX EM GREASE (MOBIL)

Frame size	Amount of grease (g)	3600 rpm	3000 rpm	1800 rpm	1500 rpm	1200 rpm	1000 rpm	900 rpm	750 rpm	720 rpm	600 rpm	500 rpm
Relubrication intervals in hours - ball bearings												
254/6T	13	15700	18100	20000	20000	20000	20000	20000	20000	20000	20000	20000
284/6T	18	11500	13700	20000	20000	20000	20000	20000	20000	20000	20000	20000
324/6T	21	9800	11900	20000	20000	20000	20000	20000	20000	20000	20000	20000
364/5T	27	3600	4500	9700	11600	14200	17300	19700	19700	20000	20000	20000
404/5TS	27	3600	4500	9700	11600	14200	17300	19700	19700	20000	20000	20000
444/5TS	27	3600	4500	9700	11600	14200	17300	19700	19700	20000	20000	20000
504/5TS	27	3600	4500	9700	11600	14200	17300	19700	19700	20000	20000	20000
586/7TS	27	3600	4500	9700	11600	14200	17300	19700	19700	20000	20000	20000
Relubrication intervals in hours – cylindrical roller bearings												
324/5T	21	9800	11900	20000	20000	20000	20000	20000	20000	20000	20000	20000
364/5T	27			9700	11600	14200	17300	19700	19700	20000	20000	20000
404/5T	34			6000	7600	9500	13800	15500	15500	15500	17800	20000
444/5T	45			4700	6000	7600	12200	13700	13700	13700	15700	20000
447/5T	45			4700	6000	7600	12200	13700	13700	13700	15700	20000
504/5T	45			4700	6000	7600	12200	13700	13700	13700	15700	20000
586/7T	60			3300	4400	5900	10700	11500	11500	11500	13400	17300

Note:

The table above is specifically intended for relubrification with MOBIL Polyrex EM grease and bearing absolute operating temperature of:

✓ 70°C (158°F) for 254/6T to 324/6T frame size motors

✓ 85°C (185°F) for 364/5T to 586/7T frame size motors

For every 15°C (59°F) above these limits, relubrification intervals must be reduced by half. Shielded bearing (ZZ) are lubricated for bearing life as long are they operate under conditions and temperature of 70°C (158°F).

✓ Relubrication periods given above are for those cases applying MOBIL Polyrex® EM grease.

✓ When motors are used on the vertical position, their relubrication interval is reduced by half if compared to horizontal position motors.

✓ On applications with high or low temperatures, speed variation etc., the type of grease and relubrication intervals is given on an additional nameplate attached to the motor.

WE RECOMMENDED TO USE BALL BEARINGS FOR MOTORS DIRECTLY COUPLED TO THE LOAD

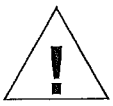

WARNING:
EXCESS OF GREASE CAN CAUSE BEARING OVERHEATING RESULTING IN COMPLETE DAMAGE.

5.1.3 - Compatibility of MOBIL Polirex EM grease with other types of grease

Containing polyurea thickener and mineral oil, the MOBIL Polyrex EM grease is compatible with other types of grease that contain:

✓ Lithium base or complex of lithium or polyurea and highly refined mineral oil.
✓ Inhibitor additive against corrosion, rust and anti-oxidant additive.

Note:
✓ Although MOBIL Polyrex EM is compatible with the types of grease given above, we do not recommend mixing it with any other types of grease.
✓ If you intend to use a type of grease different than those recommended above, first contact WEG.

BEFORE USING STANDARD MOTORS IN SPECIFIC AREAS OR ON SPECIAL APPLICATIONS, FIRST CONTACT THE GREASE MANUFACTURER OR WEG

5.2 - Assembly and Disassembly

Disassembly and assembly must be done by qualified personnel using only suitable tools and appropriate methods.

The bearing extractor grips must be applied over the side face of the inner ring to be disassembled or over an adjacent part.

It is essential to assemble bearings under clean conditions to ensure good operation and to avoid damages. New bearings shall only be taken out from their packages when assembling them.

Before installing a new bearing it is required to check the shaft fitting for any sharp edge or strike signals.

For bearing assembly warm their inner parts with suitable equipment – inductive process – or use suitable tools.

6. SPARE PARTS

When ordering spare parts, please specify the full type designation and product code as stated on the motor nameplate. Please also inform the motor serial number stated on the nameplate.

7 - VARIABLE FREQUENCY DRIVE MOTORS

7.1 - Standard Motors Line

Motors with voltages up to 575V do not require filters if follow the criteria bellow:

Rated Voltage	Insulation System	TECHNICAL CRITERIA FOR VFD APPLICATION			
		Voltage Spikes **motor terminals (maximum)**	dV/dt **inverter terminals (maximum)**	Rise Time(*) **inverter terminals (minimum)**	MTBP(*) **Minimum Time Between Pulse**
$V_{rated} \leq 460V$	**Standard Insulation**	**≤ 1430V**	**≤ 5200 V/µs**	**≥ 0,1 µs**	**≥ 6 µs**
$460V < V_{rated} \leq 575V$	**Reinforced Insulation**	**≤ 1780V**	**≤ 6500 V/µs**		

(*) Informed by the drive manufacturer.

Note:
1) Motors with nameplate showing voltage 380-415V / 660-690V - 50Hz and 440-480V - 60Hz, and fed by VFD on voltage 660-690V - 50Hz or 480V - 60Hz require filters.
2) Motors in frame sizes 504/5T and 586/7T* when uded with VFD's, require insulated bearings.

* Other frame sizes, under request.

IF SUCH RECOMMENDATIONS AND CRITERIA ARE NOT FOLLOWED ACCORDINGLY, MOTOR WARRANTY WILL BE VOID

7.2 - Inverter Duty Motors Line

Motors with voltages above 575V and equal or below 690V and fed by VFD do not require filters when following the criteria below:

Rated Voltage	Insulation System	TECHNICAL CRITERIA FOR VFD APPLICATION			
		Voltage Spikes **motor terminals (maximum)**	dV/dt **inverter terminals (maximum)**	Rise Time(*) **inverter terminals (minimum)**	MTBP(*) **Minimum Time Between Pulse**
575V < V_{rated} ≤ 690V	**Reinforced Insulation**	**≤ 2140V**	**≤ 7800 V/µs**	**≥ 0,1 µs**	**≥ 6 µs**

(*) Informed by the drive manufacturer.

✓ Check power supply voltage of the forced cooling set.

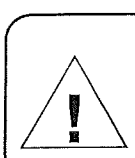

IF SUCH RECOMMENDATIONS AND CRITERIA ARE NOT FOLLOWED ACCORDINGLY, MOTOR WARRANTY WILL BE VOID

7.3– Bearing insulation

Inverter Duty Motors line in frame sizes 504/5T and 586/7T* are supplied with ground system between the shaft and frame on Drive Endshield. Also, on request can be supplied with insulated bearings.

For other lines, in frame sizes 504/5T and 586/7T* when used with VFD's it is required ground system between the shaft and frame or insulated bearings.
(*) Other frame sizes, under request.

8 - ADDITIONAL INSTRUCTIONS

8.1 - Hazardous Area Motors

8.1.1 General

Besides the recommendations given above, these recommendations must be also followed.
Motors for hazardous area are manufactured according to specific Standards for such environments.
Motors supplied for hazardous area (classified areas) must be installed in areas that comply with those specified on the motor nameplate.

Notes:
- Motors of Division I are also suitable for Division 2.
- Motors of a given class of temperature are suitable also for combustible environments of a greater class of temperature (example, T4 motors are suitable for environments of class T3, T2, T1).

8.1.2 Installation

A complete installation must follow procedures given by local legislation in effect.

THE INSTALLATION OF HAZARDOUS AREA MOTORS MUST BE CARRIED OUT BY SKILLED PEOPLE

THE SPECIFICATION OF THE MOTOR INSTALLATION SITE IS FOR CUSTOMER'S RESPONSIBILITY, WHO WILL ALSO DETERMINE THE ENVIRONMENT CHARACTERISTICS

When cable entrance is made by a cable gland, this must be suitable to the unit and to the type of cable; the cable gland has to be assembled, completely screwed in order to get the necessary pressure on the sealing rings, so as to:
- Avoid transmission of mechanical vibrations to the motor terminals.
- Guarantee mechanical protection "IP" to the terminal box.

8.1.3 Checking and Maintenance

Maintenance must be carried out by repair shops authorized and accredited by WEG.

Repair shops and people without WEG's authorization who will perform any service on hazardous area motors will be fully responsible for such service as well as for any consequential damage.
When performing maintenance, installation or relubrication, follow these instructions:

✓ Electric connections must be correctly locked to avoid resistance-increases, with consequent contact overheating.
✓ Insulation air-distance and surface-distance between conductors, required by the Standards, must be respected.
✓ All screws, used to assemble parts motor and terminal box, must be completely screwed.
✓ Seals and components replacement for cable entrance would be made using spare parts, supplied from the manufacturer, in order to guarantee the original type of protection.
✓ Explosion Proof motors joint surfaces have not to be machined and it is not allowed to insert, between them, any kind of seals, not foreseen or supplied by the manufacturer. Joint surfaces have just to be cleaned and, in order to avoid corrosion or water penetration; they can be oiled by means of a thin coat of silicon grease.
✓ Check if all components are free of edges, knocks or dirt.
✓ Make sure all parts are in perfect conditions.
✓ Lubricate the surfaces of the endshield fittings with protective oil to make the assembly easier.
✓ Use only rubber hammer to fit the parts.
✓ Check the correct bolts fastening.
✓ Use clearance calibrator for correct connection terminal box fitting (less than 0.05mm).

8.1.4 Explosion Proof Motor Repairs

Repairing of Explosion Proof motors can only be performed by authorized companies. Please get in contact with nearest WEG office/distributor.

9. WARRANTY TERMS

WEG warrants its products against defects in workmanship and materials for eighteen (18) months from the invoice date issued by the factory, authorized distributor or agent limited to twenty four (24) months from manufacturing date independent of installation date as long as the following items are fulfilled accordingly:

- Proper transportation, handling and storage;

- Correct installation based on the specified ambient environmental conditions;

- Operation under motor capacity limits;

- Observation of the periodical maintenance services;

- Repair and/or replacement effected only by personnel duly authorized in writing by WEG;

- The failed product be available to the supplier and/or repair shop for a required period to detect the cause of the failure and corresponding repair;

- Immediate notice by the purchaser about failures occurred and that these are accepted by WEG as manufacturing defects.

This warranty does not include disassembly services at the purchaser facilities, transportation costs with product, tickets, accommodation and meals for technical personnel when requested by the customer.

The warranty service will be only carried out at WEG Authorized Repair Shops or at WEG's facilities.

Components whose useful life, under normal use, is shorter than the warranty period are not covered by these warranty terms.

The repair and/or replacement of parts or components, when affected by WEG and/or any WEG Authorized Repair Shop, will not give warranty extension.

This constitutes WEG's only warranty in connection with this sale and the company will have no obligation or liability whatsoever to people, third parties, other equipment or installations, including without limitation, any claims for consequential damages or labor costs.

Electro Static Technology™
An ITW Company

AEGIS SGR™
BEARING PROTECTION RING™

AEGIS SGR™ Bearing Protection Ring Kit for NEMA & IEC Motors

- *Protects motors from catastrophic failure*
- *Safely channels harmful VFD induced shaft currents to ground*
- *Easy to order and install for any NEMA or IEC frame size*

PROBLEM:
VFD Induced Shaft Voltages Damage Bearings

The use of variable frequency drives (VFD) with AC motors induce electrical voltages on the motor shaft. Once they exceed the resistance of the bearing lubricant, these voltages discharge to ground (typically the motor housing), causing fusion craters in the bearings. Over time, these craters increase in size and number, resulting in frosting, pitting, fluting, and eventually bearing failure. This type of premature bearing failure can cost thousands of dollars in increased maintenance and lost production.

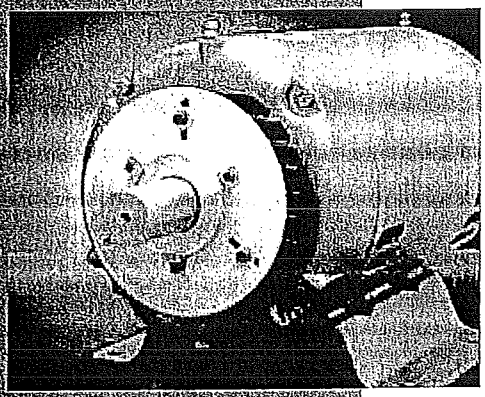

SOLUTION:
AEGIS SGR™ - Electrical Bearing Damage Protection

The new AEGIS SGR Conductive MicroFiber™ Bearing Protection Ring™ prevents electrical damage to motor bearings by safely channeling harmful currents to ground. Using proprietary Electron Transport Technology, the conductive microfibers inside the AEGIS SGR provide the path of least resistance for damaging bearing currents, preventing electrical damage to motor bearings and dramatically extending motor life.

Easy to install on motor end bell

- Clears any slinger, shaft shoulder or protrusion
- Adjustable slots adapt to most end bells
- Rigid mounting plate ensures alignment
- Slim design, uses less than ½" usable shaft length

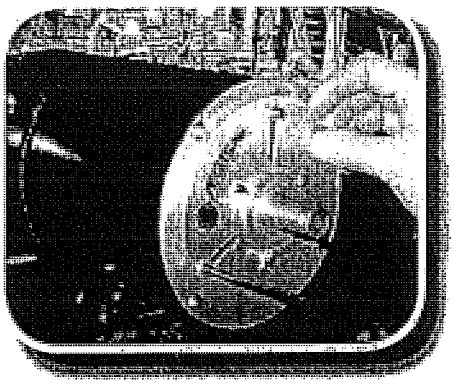

www.est-aegis.com

EST-ITW Copyright © 2007 Form 200-6

Patented Technology

AEGIS SGR™
BEARING PROTECTION RING™

NEMA/IEC Bearing Protection Ring Kit

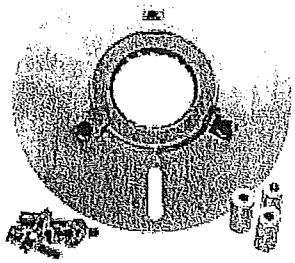

1 Aegis SGR
1 mounting plate
3 screws (inches or metric)
3 washers
3 lock washers
3 spacers*

* spacer lengths: 1/4", 1/2", and 1" for NEMA kits and 7mm, 17mm, and 27mm for IEC kits.

NEMA Motors

Catalog Number	Motor shaft diameter "u"	NEMA Frame	Plate OD
SGR-0.625-NEMA	0.625	56	3.75"
SGR-0.875-NEMA	0.875	143T, 145T	5.60"
SGR-1.125-NEMA	1.125	182T, 184T	5.60"
SGR-1.375-NEMA	1.375	213T, 215T	5.60"
SGR-1.625-NEMA	1.625	254T, 256T	6.30"
SGR-1.875-NEMA	1.875	284T, 286T, 324TS, 326TS, 364TS, 365TS	6.30"
SGR-2.125-NEMA	2.125	324T, 326T, 404TS, 405TS	6.60"
SGR-2.375-NEMA	2.375	364T, 365T, 444TS, 445TS, 447TS, 449TS	6.60"
SGR-2.875-NEMA	2.875	404T, 405T	7.30"
SGR-3.375-NEMA	3.375	444T, 445T, 447T, 449T	7.60"

IEC Motors

Catalog Number	IEC shaft diameter	IEC Frame	Plate OD
SGR-19-IEC	19mm	IEC 80 (2, 4, 6, 8 pole)	142mm
SGR-24-IEC	24mm	IEC 90S, 90L (2, 4, 6, 8 pole)	142mm
SGR-28-IEC	28mm	IEC 100L, 112M (2, 4, 6, 8 pole)	142mm
SGR-38-IEC	38mm	IEC 132S, 132M (2, 4, 6, 8 pole)	160mm
SGR-42-IEC	42mm	IEC 160M, 160L (2, 4, 6, 8 pole)	160mm
SGR-48-IEC	48mm	IEC 180M, 180L (2, 4, 6, 8 pole)	160mm
SGR-55-IEC	55mm	IEC 200L (2, 4, 6, 8 pole) ; IEC 225S, 225M (2 pole)	168mm
SGR-60-IEC	60mm	IEC 225S, 225M (4, 6, 8 pole) ; IEC 250M (2 pole)	168mm
SGR-65-IEC	65mm	IEC 250M (4, 6, 8 pole); IEC 280M, 280S, 315S, 315M, 315L (2 pole)	185mm
SGR-75-IEC	75mm	IEC 280S, 280M (4, 6, 8 pole); IEC 355M, 355L (2pole)	193mm
SGR-80-IEC	80mm	IEC 315S, 315M, 315L (4, 6, 8 pole)	193mm
SGR-95-IEC	95mm	IEC 335L, 335M, 355L, 355M (4, 6, 8, 10 pole)	211mm

Instructions:

1. Shaft must be clean & free of any coatings, paint, or other nonconductive material.
2. Slide SGR and mounting plate over motor shaft with even clearance around the shaft. Conductive MicroFibers must be in contact with conductive metal surface of the shaft. NOTE: SGR microfibers should not come in contact with the keyway during operation.
3. Mark drill points on motor housing then drill and tap.
4. Secure mounting kit in place with screws, washers, and spacers.
5. In occasions where SGR is exposed to excessive debris, additional protection of the SGR fibers may be necessary. Call technical support at 207-998-5140 or email techsupport@est-aegis.com

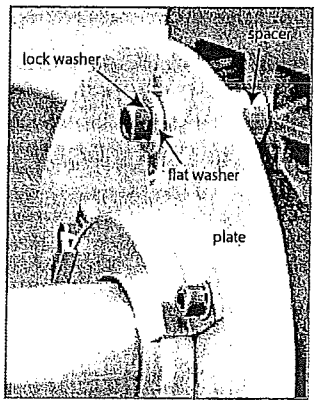

Learn more about protecting motors from VFD-induced bearing damage at:

www.est-aegis.com

Electro Static Technology™
An ITW Company
Tel: 1-866-738-1857
Fax: 1-207-998-5143
sales@est-aegis.com
www.est-aegis.com

EST-ITW Copyright © 2007 Form 200-6

Patented Technology

Fits Shaft Diameter: 2.375"
NEMA FRAME
364 T
365 T
444 TS
445 TS
447 TS
449 TS

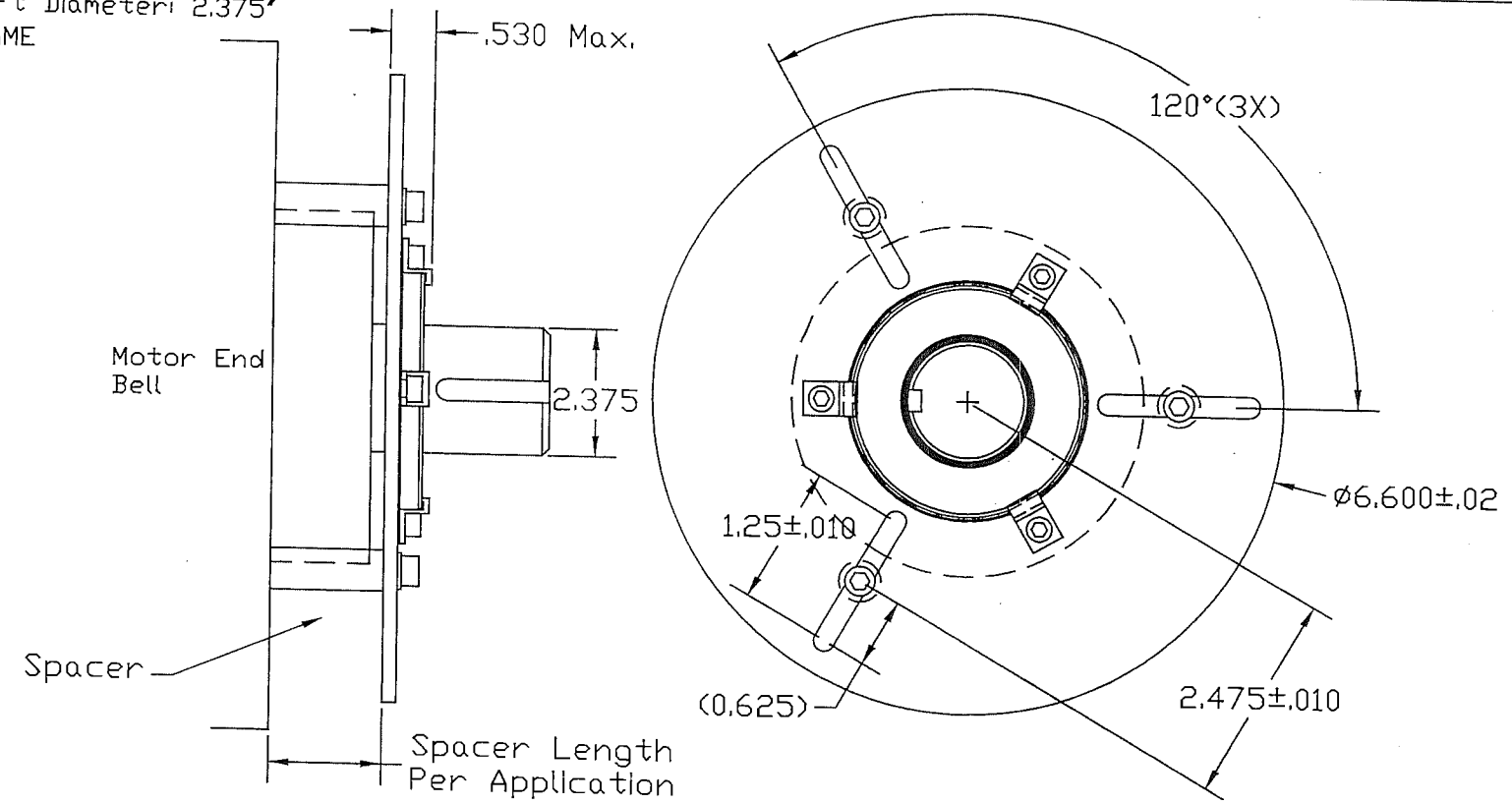

Mounting Plate: Aluminum

Flat Washers: #8 SAE Zinc- Plated Steel (rust resistant)

Lock Washer: #8 medium Steel Split-plain steel

Screws: 8-32 Socket Head Cap Screws-Alloy Steel

Spacer: 3/8" OD #8 Screw Clearance -Aluminum Unthreaded Round Spacer

THEREIN, ARE THE EXCLUSIVE PROPERTY OF ELECTRO STATIC TECHNOLOGY ISSUED IN STRICT CONFIDENCE AND SHALL NOT WITHOUT CONSENT, BE REPRODUCED, COPIED OR USED FOR ANY PURPOSE WHATSOEVER, EXCEPT BUSINESS WITH E.S.T.

UNLESS OTHERWISE SPECIFIED		
DIMENSIONS ARE IN.		
MILLIMETERS ☐		
INCHES ☒		
UNTOLERANCED DIMENSIONS		
OVER	TO	TOLERANCE
DATE: 4/18/07		
ENGINEER: J. Richardson		

ELECTRO STATIC TECHNOLOGY
AN ITW COMPANY
31 WINTERBROOK ROAD, MECHANIC FALLS, MAINE 04256
PHONE (207)998-5140 FAX (207)998-5143

AEGIS NEMA SHAFT GROUNDING KIT

DWG NO. SGR-2.375-NEMA | Rev. *B

us Patent No 7,136,271 & 7,193,836 Other patents pending

4
Coils

AEROFIN
Heat Transfer Products

Date: 12/21/2010
Job Name: Newark Airport
System ID: RHC-11.1 revA
Quote No. 100111-01

Model No.	Qty. In Face	FL INCH	Total Weight LBS.
HW-7.0AF-60.0 X 60.0-2-1	1	60.00	255
Totals:	1		255

Coil HW
TF: 40
Row: 2
Fin: 7.00 / IN
Circuit: Full

Tube: 0.625 inch X 0.035 inch Copper Seamless Tubes , Belled
Fin Material: Aluminum Flat **Thickness:** 0.0095 IN.
Csg Material: 1-1/2" Leg with Galvanized Casings
Connection: (1) 2.5" (Center) Threaded Non-Ferrous
Hdr Material: Standard Non-Ferrous with Brazed Joints

Dwg: CA-HW-101

Performance NV

Pressure: 29.92 IN HG Elevation: Sea Level

Airflow:	29,100.0	SCFM	**Water**		
System Face Area:	25.0	FT^2	Flow Rate:	112.14	GPM
Standard Face Velocity:	1,164.0	FPM	Entering Temp:	200.0	°F
Entering Dry Bulb Temp:	38.0	°F	Leaving Temp:	180.0	°F
			Tube Velocity:	3.3	FPS
Leaving Dry Bulb Temp:	72.4	°F	Inside Surface Fouling:	0.0000	$HR{\cdot}FT^2{\cdot}°F/BTU$
Outside Surface Fouling:	0.0000	$HR{\cdot}FT^2{\cdot}°F/BTU$			
Sensible Heat Load:	1,080.9	MBH			
Total Heat Load:	1,080.9	MBH			

Losses

Air Friction:	0.43	IN H2O	Pressure Drop:	3.9	FT H2O

Comments:

Notes & Warnings:

56 Rated in accordance with AHRI Standard 410.
13 Pressure drop shown is based on belled tube ends.

AEROFIN
Heat Transfer Products

Date: 12/21/2010
Job Name: Newark Airport
System ID: RHC-11.2 revA
Quote No. 100111-01

Model No.	Qty. In Face	FL INCH	Total Weight LBS.
HW-8.0AF-60.0 X 60.0-2-1	1	60.00	265
Totals:	1		265

Coil	HW	**Tube:**	0.625 inch X 0.035 inch Copper Seamless Tubes , Belled
TF:	40	**Fin Material:**	Aluminum Flat **Thickness:** 0.0095 IN.
Row:	2	**Csg Material:**	1-1/2" Leg with Galvanized Casings
Fin:	8.00 / IN	**Connection:**	(1) 2.5" (Center) Threaded Non-Ferrous
Circuit:	Full	**Hdr Material:**	Standard Non-Ferrous with Brazed Joints

Dwg: CA-HW-101

Performance NV

Pressure: 29.92 IN HG Elevation: Sea Level

Airflow:	22,200.0	SCFM	**Water**		
System Face Area:	25.0	FT^2	Flow Rate:	107.95	GPM
Standard Face Velocity:	888.0	FPM	Entering Temp:	200.0	°F
Entering Dry Bulb Temp:	38.0	°F	Leaving Temp:	180.0	°F
			Tube Velocity:	3.2	FPS
Leaving Dry Bulb Temp:	81.4	°F	Inside Surface Fouling:	0.0000	$HR{\cdot}FT^2{\cdot}°F/BTU$
Outside Surface Fouling:	0.0000	$HR{\cdot}FT^2{\cdot}°F/BTU$			
Sensible Heat Load:	1,040.5	MBH			
Total Heat Load:	1,040.5	MBH			

Losses

Air Friction:	0.28	IN H2O	Pressure Drop:	3.7	FT H2O

Comments:

Notes & Warnings:

56 Rated in accordance with AHRI Standard 410.
13 Pressure drop shown is based on belled tube ends.

AEROFIN
Heat Transfer Products

Date: 12/21/2010
Job Name: Newark Airport
System ID: RHC-11.3 revA
Quote No. 100111-01

Model No.	Qty. In Face	FL INCH	Total Weight LBS.
HW-9.0AF-60.0 X 60.0-2-1	1	60.00	275
Totals:	1		275

Coil	HW	**Tube:**	0.625 inch X 0.035 inch Copper Seamless Tubes , Belled
TF:	40	**Fin Material:**	Aluminum Flat
Row:	2	**Csg Material:**	1-1/2" Leg with Galvanized Casings
Fin:	9.00 / IN	**Connection:**	(1) 2.5" (Center) Threaded Non-Ferrous
Circuit:	Full	**Hdr Material:**	Standard Non-Ferrous with Brazed Joints

Thickness: 0.0095 IN.

Dwg: CA-HW-101

Performance NV

Pressure: 29.92 IN HG Elevation: Sea Level

Airflow:	29,700.0	SCFM	**Water**		
System Face Area:	25.0	FT^2	Flow Rate:	140.76	GPM
Standard Face Velocity:	1,188.0	FPM	Entering Temp:	200.0	°F
Entering Dry Bulb Temp:	38.0	°F	Leaving Temp:	180.0	°F
			Tube Velocity:	4.1	FPS
Leaving Dry Bulb Temp:	80.3	°F	Inside Surface Fouling:	0.0000	$HR{\cdot}FT^2{\cdot}°F/BTU$
Outside Surface Fouling:	0.0000	$HR{\cdot}FT^2{\cdot}°F/BTU$			
Sensible Heat Load:	1,356.7	MBH			
Total Heat Load:	1,356.7	MBH			

Losses

Air Friction:	0.48	IN H2O	Pressure Drop:	6.2	FT H2O

Comments:

Notes & Warnings:

56 Rated in accordance with AHRI Standard 410.
13 Pressure drop shown is based on belled tube ends.

AEROFIN
Heat Transfer Products

Date: 12/21/2010
Job Name: Newark Airport
System ID: RHC-11.4 revA
Quote No. 100111-01

Model No.	Qty. In Face	FL INCH	Total Weight LBS.
HW-12.0AS-60.0 X 22.0-1-0.25	1	22.00	71
Totals:	1		71

Coil	HW	**Tube:**	0.625 inch X 0.035 inch Copper Seamless Tubes , Belled		
TF:	40	**Fin Material:**	Aluminum Star	**Thickness:** 0.0095	IN.
Row:	1	**Csg Material:**	1-1/2" Leg with Galvanized Casings		
Fin:	12.00 / IN	**Connection:**	(1) 1.5" (Center) Threaded Non-Ferrous		
Circuit:	1/4	**Hdr Material:**	Standard Non-Ferrous with Brazed Joints		

Dwg: CA-HW-101

Performance NV

Pressure: 29.92 IN HG Elevation: Sea Level

Airflow:	6,300.0	SCFM	**Water**		
System Face Area:	9.2	FT^2	Flow Rate:	29.01	GPM
Standard Face Velocity:	687.3	FPM	Entering Temp:	200.0	°F
Entering Dry Bulb Temp:	38.0	°F	Leaving Temp:	180.0	°F
			Tube Velocity:	3.4	FPS
Leaving Dry Bulb Temp:	79.1	°F	Inside Surface Fouling:	0.0000	$HR{\cdot}FT^{2}{\cdot}°F/BTU$
Outside Surface Fouling:	0.0000	$HR{\cdot}FT^{2}{\cdot}°F/BTU$			
Sensible Heat Load:	279.6	MBH			
Total Heat Load:	279.6	MBH			

Losses

Air Friction:	0.15	IN H2O	Pressure Drop:	2.2	FT H2O

Comments:

Notes & Warnings:

56 Rated in accordance with AHRI Standard 410.
13 Pressure drop shown is based on belled tube ends.

CA-771

AEROFIN
Heat Transfer Products ®

INSTALLATION, OPERATION AND MAINTENANCE INSTRUCTIONS

HELICAL FIN TYPE: C, CP, CPU, CD, CDP, CDPU, CB & CT

PLATE FIN TYPE: W & WD

FOR USE WITH HOT WATER OR GLYCOL

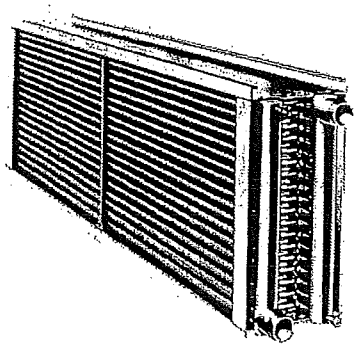

Type C, CB, CP
(Helical Fins)

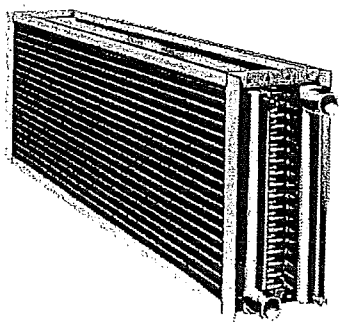

Type W
(Plate Fins)

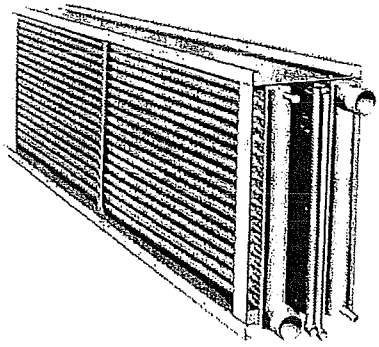

Type CD & CDP
(Helical Fins)

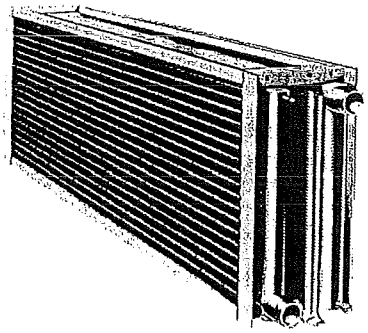

Type WD
(Plate Fins)

AEROFIN
Heat Transfer Products ®
4621 MURRAY PLACE, LYNCHBURG VA 24506
TEL: (434) 845-7081 FAX: (434) 528-6242

http://www.aerofin.com

INSTALLATION, OPERATION, AND MAINTANENCE INSTRUCTIONS FOR HELICAL FIN RETURN BEND TYPE C, CP, CPU, CD, CDP, CDPU, CB, & CT COILS AND PLATE FIN RETURN BEND TYPE W & WD COILS FOR USE WITH HOT WATER OR GLYCOL

Return bend type C, CP, CPU, CD, CDP, CDPU, CB, CT, W, and WD coils have no moving parts and therefore require no adjustment of any kind within the units themselves. The tubes are supported in the casing with each tube capable of expansion and contraction independent of the others.

Aerofin water coils should be installed with the casings level and with the top up for proper drainage. Aerofin CD, CDP, CDPU, and WD coils must be installed pitched towards the drain headers to insure complete drainage of these coils.

Coils should be firmly and adequately supported with a minimum of three supports; one at the center and one at each end of the coil. If coils are to be stacked vertically, the upper coils must be independently supported so that the weight of the upper coils does not rest on the bottom coil, unless the coils have been fabricated with additional bracing for stacking. Coils should be securely fastened to or inside the duct or unit. All ducts or unit walls should be adequately insulated and sealed to minimize heat losses. Flashing should be used to prevent by-pass of air around fin surface.

The most common ways to regulate the heating load are by the use of a control valve and/or dampers. For better control of the fluid flow, the control valve should be installed in the return piping.

When coils are heating freezing air using hot water, do not modulate the water flow through the coils. The minimum recommended water flow rate for heating freezing air is 1.7 gpm per tube circuit (2.0 ft/sec tube velocity) with a minimum leaving water temperature of 75°F. The number of tube circuits would be the number of tubes being supplied with water.

Air filters should be located on the entering air side of the coil to filter out oil, dust, lint and soil which could foul the fin surface of the coil.
A strainer should be provided on the entering water side of the coil for filtering out foreign particles.

For high temperature systems caution should be taken to maintain adequate pressures to prevent the flashing of steam during operation.

When draining the coils caution should be exercised to guard against the possibility of flashing of water to steam. To completely drain the coils, it is necessary to drain from the bottom of both headers, when airflow is horizontal and from the lowest point for vertical airflow.

When coils using water are not in operation and freezing temperatures are expected and to insure proper protection of the coils, remove water from the coils as described in Aerofin Bulletin CA-194 entitled "Protection of Water Coils to Prevent Freezing Damage", or add anti-freeze similar to Prestone™ (Ethylene Glycol) as mentioned in this bulletin.

Maintenance Instructions

External Cleaning of Coils:

Fins should be either steam cleaned or sprayed with non-corrosive solvents or cleaners such as Simple Green™ to remove oil, lint, dust, and soil. Direct high-pressure blast on the fin surface should be avoided.

Internal Cleaning of Coils:

The coils may be internally cleaned by flushing them out with non-corrosive cleaning solvents or steam cleaning, or flushing with clean water.

Spare Parts

There are no spare parts available for these heat exchangers.
To order replacement coils contact the Aerofin home office at (434) 845-7081 or visit our website at http://www.aerofin.com for the location of the nearest Aerofin regional sales office.

AEROFIN
Heat Transfer Products

Date: 12/30/10
Job Name: Newark Airport
System ID: AC-11 CC Rev B
Quote No. 100111-01

Model No.	Qty. In Face	FL INCH	Total Weight LBS.
W-9.0AS-39.0 X 54.0-8-0.666	12	54.00	6,753
Totals:	12		6,753

Coil	W	**Tube:**	0.625 inch X 0.035 inch Copper Seamless Tubes , Belled		
TF:	26	**Fin Material:**	Aluminum Star	**Thickness:** 0.0095	IN.
Row:	8	**Csg Material:**	3/4" Leg with Stainless Stl Casings		
Fin:	9.00 / IN	**Connection:**	(1) 2" (Center) Threaded Non-Ferrous		
Circuit:	2/3	**Hdr Material:**	Standard Non-Ferrous with Brazed Joints		

Dwg: CA-W-101-6

Performance NV

Pressure: 29.92 IN HG Elevation: Sea Level

Airflow:	87,000.0	SCFM	**Water**		
System Face Area:	175.5	FT^2	Flow Rate:	604.00	GPM
Standard Face Velocity:	495.7	FPM	Entering Temp:	42.0	°F
Entering Dry Bulb Temp:	80.6	°F	Leaving Temp:	57.2	°F
Entering Wet Bulb Temp:	69.0	°F	Tube Velocity:	3.5	FPS
Leaving Dry Bulb Temp:	52.2	°F	Inside Surface Fouling:	0.0000	$HR{\cdot}FT^2{\cdot}°F/BTU$
Leaving Wet Bulb Temp:	51.9	°F			
Outside Surface Fouling:	0.0000	$HR{\cdot}FT^2{\cdot}°F/BTU$			
Sensible Heat Load:	2,669.6	MBH			
Total Heat Load:	4,570.7	MBH			

Losses

Air Friction:	0.74	IN H2O	Pressure Drop:	8.8	FT H2O

Comments:

Notes & Warnings:

56 Rated in accordance with AHRI Standard 410.
13 Pressure drop shown is based on belled tube ends.

CA-494

AEROFIN
Heat Transfer Products ®

INSTALLATION, OPERATION AND MAINTENANCE INSTRUCTIONS

HELICAL FIN TYPE: C, CP, CPU, CD, CDP, CDPU, CB & CT

PLATE FIN TYPE: W & WD

FOR USE WITH CHILLED WATER OR GLYCOL

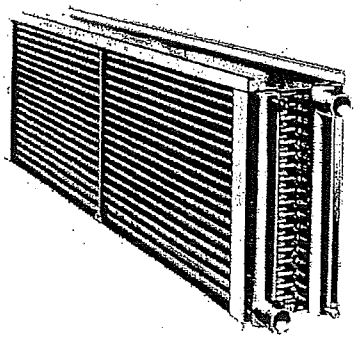

Type C, CB & CP
(Helical Fins)

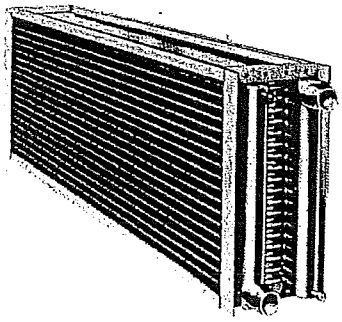

Type W
(Plate Fins)

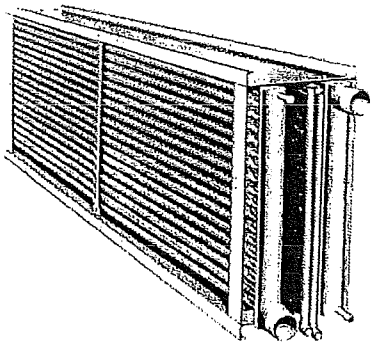

Type CD & CDP
(Helical Fins)

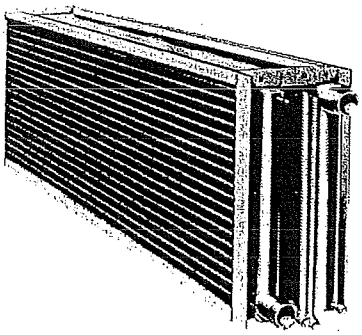

Type WD
(Plate Fins)

AEROFIN
Heat Transfer Products
4621 MURRAY PLACE, LYNCHBURG VA 24506
TEL: (434) 845-7081 FAX: (434) 528-6242
http://www.aerofin.com

INSTALLATION, OPERATION AND MAINTENANCE INSTRUCTIONS FOR HELICAL FIN RETURN BEND TYPE C, CP, CPU, CD, CDP, CDPU, CB, & CT COILS AND PLATE FIN RETURN BEND TYPE W & WD COILS FOR USE WITH CHILLED WATER OR GLYCOL

Return bend type C, CP, CPU, CD, CDP, CDPU, CB, CT, W, and WD coils have no moving parts and therefore require no adjustment of any kind within the units or ducts themselves. The tubes are supported in the casing with each tube capable of expansion and contraction independent of the others.

Aerofin chilled water coils should be installed with the casings level and with the top up for proper drainage. Aerofin CD, CDP, CDPU, and WD coils must be installed pitched towards the drain headers to insure complete drainage of these coils.

Chilled water coils should be firmly and adequately supported with a minimum of three supports; one at the center and one at each end of the coil. If coils are to be stacked vertically, the upper coils must be independently supported so that the weight of the upper coils does not rest on the bottom coil, unless the coils have been purchased and fabricated with additional bracing for stacking. Coils should be securely fastened to or inside the duct or unit. All ducts or unit walls should be adequately insulated and sealed to prevent sweating and minimize heat losses. Flashing should be used to prevent by-pass of air around fin surface.

The most common ways to regulate the cooling load are by the use of a control valve and/or dampers. For better control of the fluid flow, the control valve should be installed in the return piping.

Drain pans should be provided on the leaving air side of each dehumidifying coil to collect condensate. At 500 FPM, the drain pan should extend a minimum of 8" inch beyond the base of the coil, 12" inch at 525 FPM and 16" inch at 550 FPM. At higher velocities moisture eliminators may be used. When coils are stacked vertically, each coil should have a separate drain pan.

Air filters should be located on the entering air side of the coil to filter out oil, dust, lint and soil which could foul the fin surface of the coil.
A strainer should be provided on the entering water side of the coil for filtering out foreign particles.

Piping should be adequately insulted to prevent sweating and minimize heat losses.

The coils should be vented either through the vent connections provided on each header or through the return piping.

To completely drain the coils, it is necessary to drain from the bottom of both headers, when airflow is horizontal and from the lowest point for vertical airflow. For CD, CDP and WD coils, drain connections are provided on the intermediate drain headers. To insure complete drainage, disconnect the lower connection from piping and drain through the connection.

When coils using water are not in operation and freezing temperatures are expected and to insure proper protection of the coils, remove water from the coils as described in Aerofin Bulletin CA-194 entitled "Protection of Water Coils to Prevent Freezing Damage" or add anti-freeze similar to Prestone (Ethylene Glycol) as mentioned in this bulletin.

Maintenance Instructions

External Cleaning of Coils:

Fins should be either steam cleaned or sprayed with non-corrosive solvents or cleaners such as Simple Green™ to remove oil, lint, dust, and soil. Direct high-pressure blast on the fin surface should be avoided.

Internal Cleaning of Coils:

The coils may be internally cleaned by flushing them out with non-corrosive cleaning solvents or steam cleaning, or flushing with clean water.

Spare Parts

There are no spare parts available for these heat exchangers.
To order replacement coils contact the Aerofin home office at (434) 845-7081 or visit our website at http://www.aerofin.com for the location of the nearest Aerofin regional sales office.

5
Filters

Flanders®
FOREMOST IN AIR FILTRATION

Pre Pleat™ 40 LPD

Low Pressure Drop
MERV 8 Pleated Filter

PB700-0510

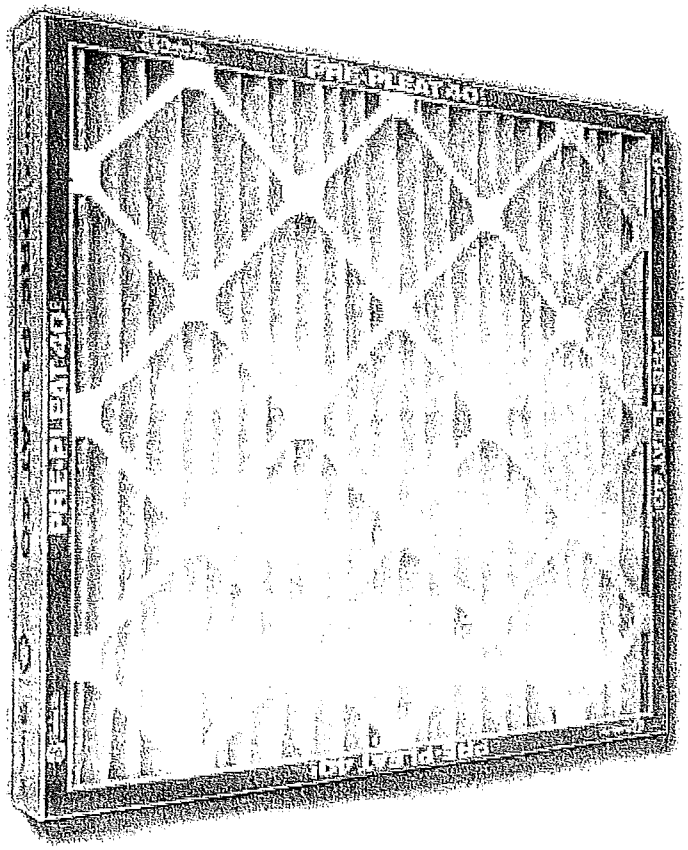

Pre Pleat 40™ LPD

- **MERV 8**
- **40% Lower Pressure Drop**
- **Industries Highest Dust Holding Capacity**

Pre Pleat™ 40 LPD - MERV 8 Pleated Filter

Highest Dust Holding and Lowest Pressure Drop in the Industry!

Flanders has led the world in filter media development and the application of high efficiency filtration for over 50-years. Originally introduced in 2004, the industry's first MERV 8 filter operating solely on mechanical means has now been improved! Since 2004, other manufacturers have altered media blends to meet the LEED® and market driven demand for non-electret MERV 8 filters. This has led to pressure drop increases in their filters of 25% or more!

Utilizing a unique new fiber technology, our Research & Development Team has now achieved the multiple goals of maintaining MERV 8 performance at a resistance that is 40% lower than competition. At the same time, the LPD's Dust Holding Capacity remains the highest in the industry. All this while operating on 100% mechanical principles - *Remarkable!*

Construction / Physical Data

Media

100% synthetic non-woven, proprietary media that can be recycled. Engineered with a gradient density composition achieving a MERV 8 using the mechanical method of particle capture. Media does not rely on an electrostatic charge to capture particulate which will dissipate over time and during use.

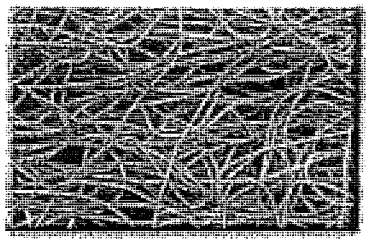

Media Support

Newly designed expanded metal is continuously laminated on the air leaving side to provide pleat stability while eliminating flutter during operation.

Pleat Design

V-Pleat design aides in pressure drop while reducing energy cost. Design allows for total media usage and provides maximum airflow and dust holding capacity during the life of the filter

Frame

Heavy-duty two piece moisture-resistant frame includes diagonal and horizontal support members bonded to the media on the air entering and leaving sides for unsurpassed frame strength. Interlocking corners and positive media-to-frame seal reduces the possibility of air-bypass.

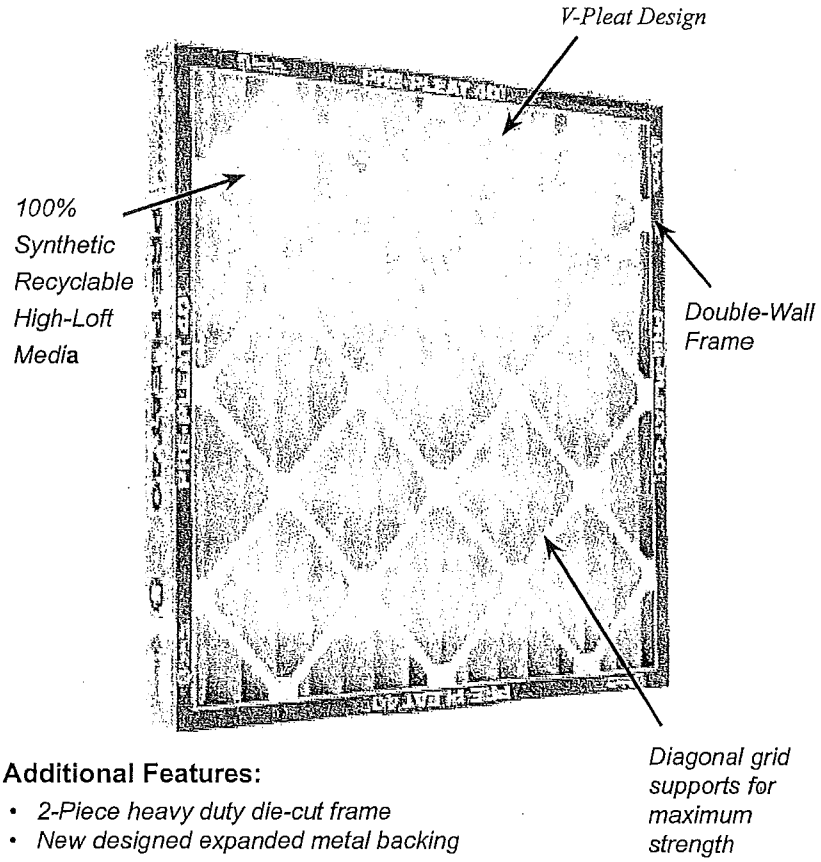

Additional Features:

- *2-Piece heavy duty die-cut frame*
- *New designed expanded metal backing*

General

Air filters are designed for dust holding, pressure drop and MERV. Flanders Pre Pleat™ 40 LPD achieves the highest **dust holding capacity** and the **lowest pressure drop** in the industry, while maintaining a mechanical MERV 8 per ASHRAE Standard 52.2-2007. Classified UL 900 Class 2.

Installation Considerations

Distinctions can be made in air filter technology. Flanders is committed to continuously developing new and improved products to assist in an environmentally responsible, healthy, and prosperous environment.

The Pre Pleat™ 40 LPD high and standard capacity pleated panel filters are suitable as pre filters but are best suited for heavy duty commercial, industrial, pharmaceutical, as well as other industrial applications where high dust holding is required. The Pre Pleat 40 LPD can be installed in PF-1 Holding Frames, K-Trac Framing Modules, Surepleat Side Access Housings and Bag-In / Bag-Out Containment housings.

Operating Temperature Limits

Maximum operating temperature is 180°F (82.22°C).

Capacities and Dimensions

Nominal Depth (in.)	Nominal Size WxHxD (in.)	Standard Capacity						High Capacity					
		300 FPM		500 FPM		Media Area (sq. ft.)	Wt. Each (lbs.)	300 fpm		500 FPM		Media Area (sq. ft.)	Wt. Each (lbs.)
		CFM	PD	CFM	PD			cfm	PD	CFM	PD		
1" Standard Capacity 13 ppf / High Capacity 15 ppf	10x10x1	208	0.17	347	-	1.1	0.2	208	0.15	347	-	1.3	0.2
	10x20x1	417	0.17	694	-	2.3	0.3	417	0.15	694	-	2.7	0.3
	12x20x1	500	0.17	833	-	2.7	0.3	500	0.15	833	-	3.1	0.3
	12x24x1	600	0.17	1000	-	3.2	0.3	600	0.15	1000	-	3.7	0.4
	14x20x1	583	0.17	972	-	3.3	0.3	583	0.15	972	-	3.7	0.4
	14x25x1	729	0.17	1215	-	4.1	0.4	729	0.15	1215	-	4.6	0.5
	15x20x1	625	0.17	1042	-	3.5	0.4	625	0.15	1042	-	3.9	0.4
	16x20x1	667	0.17	1111	-	3.7	0.4	667	0.15	1111	-	4.1	0.4
	16x25x1	833	0.17	1389	-	4.6	0.5	833	0.15	1389	-	5.2	0.5
	18x24x1	900	0.17	1500	-	4.9	0.5	900	0.15	1500	-	5.7	0.6
	18x25x1	938	0.17	1563	-	5.2	0.5	938	0.15	1563	-	5.9	0.6
	20x20x1	833	0.17	1389	-	4.5	0.5	833	0.15	1389	-	5.1	0.5
	20x24x1	1000	0.17	1667	-	5.4	0.5	1000	0.15	1667	-	6.2	0.6
	20x25x1	1042	0.17	1736	-	5.7	0.6	1042	0.15	1736	-	6.4	0.6
	24x24x1	1200	0.17	2000	-	6.4	0.6	1200	0.15	2000	-	7.4	0.7
	25x25x1	1302	0.17	2170	-	7.2	0.7	1302	0.15	2170	-	8.3	0.8
2" Standard Capacity 10 ppf / High Capacity 15 ppf	10x20x2	417	0.10	694	0.20	4.3	0.4	417	0.09	694	0.19	6.2	0.5
	12x20x2	500	0.10	833	0.20	4.8	0.5	500	0.09	833	0.19	7.2	0.5
	12x24x2	600	0.10	1000	0.20	5.8	0.6	600	0.09	1000	0.19	8.7	0.6
	14x20x2	583	0.10	972	0.20	5.8	0.5	583	0.09	972	0.19	8.6	0.6
	14x25x2	729	0.10	1215	0.20	7.2	0.7	729	0.09	1215	0.19	10.8	0.8
	15x20x2	625	0.10	1042	0.20	6.2	0.6	625	0.09	1042	0.19	9.1	0.7
	16x20x2	667	0.10	1111	0.20	6.7	0.6	667	0.09	1111	0.19	9.6	0.7
	16x25x2	833	0.10	1389	0.20	8.4	0.7	833	0.09	1389	0.19	12.0	0.9
	18x24x2	900	0.10	1500	0.20	8.7	0.8	900	0.09	1500	0.19	13.3	0.9
	18x25x2	938	0.10	1563	0.20	9.0	0.8	938	0.09	1563	0.19	13.8	1.0
	20x20x2	833	0.10	1389	0.20	8.2	0.7	833	0.09	1389	0.19	12.0	0.9
	20x24x2	1200	0.10	2000	0.20	9.8	0.9	1200	0.09	2000	0.19	14.4	1.0
	20x25x2	1042	0.10	1736	0.20	10.2	0.9	1042	0.09	1736	0.19	15.0	1.1
	24x24x2	1200	0.10	2000	0.20	11.5	1.0	1200	0.09	2000	0.19	17.3	1.2
	25x25x2	1302	0.10	2170	0.20	12.6	1.1	1362	0.09	2170	0.19	19.3	1.3
4" Standard Capacity 9 ppf / High Capacity 13 ppf	12x24x4	600	0.07	1000	0.14	11.1	1.0	600	0.06	1000	0.12	16.5	1.0
	16x20x4	667	0.07	1111	0.14	12.3	1.0	667	0.06	1111	0.12	18.0	1.2
	16x25x4	833	0.07	1389	0.14	15.5	1.3	833	0.06	1389	0.12	22.6	1.4
	18x24x4	900	0.07	1500	0.14	17.3	1.4	900	0.06	1500	0.12	24.2	1.5
	20x20x4	833	0.07	1389	0.14	15.4	1.3	833	0.06	1389	0.12	22.3	1.4
	20x24x4	1000	0.07	1667	0.14	18.6	1.5	1000	0.06	1667	0.12	24.0	1.7
	20x25x4	1042	0.07	1736	0.14	19.3	1.6	1042	0.06	1736	0.12	27.7	1.8
	24x24x4	1200	0.07	2000	0.14	22.3	1.8	1200	0.06	2000	0.12	28.8	2.0
	25x29x4	1510	0.07	2517	0.14	28.4	2.4	1510	0.06	2517	0.12	28.4	2.7
	28x30x4	1750	0.07	2917	0.14	33.2	2.8	1750	0.06	2917	0.12	42.6	3.1

Notes:

1. PD represents clean pressure drop in inches w.g. The recommended final pressure drop for all models is 1.0 in. w.g. System design may dictate a lower change-out point.
2. Actual filter face size for 12x24 and 24x24 filters is 5/8 in. under on height and width. Actual face size on all other sizes is 1/2 in. under on height and width.
3. Actual filter depth is 1/4 inch under for these nominal 1-inch, 2-inch and 4-inch deep filters. For capacities other than those shown, ratio the face velocities.
4. Efficiency is not affected by the conditioning steps outlined in ASHRAE 52.2-2007 per Appendix J.

Dust Loading / Resistance Curve

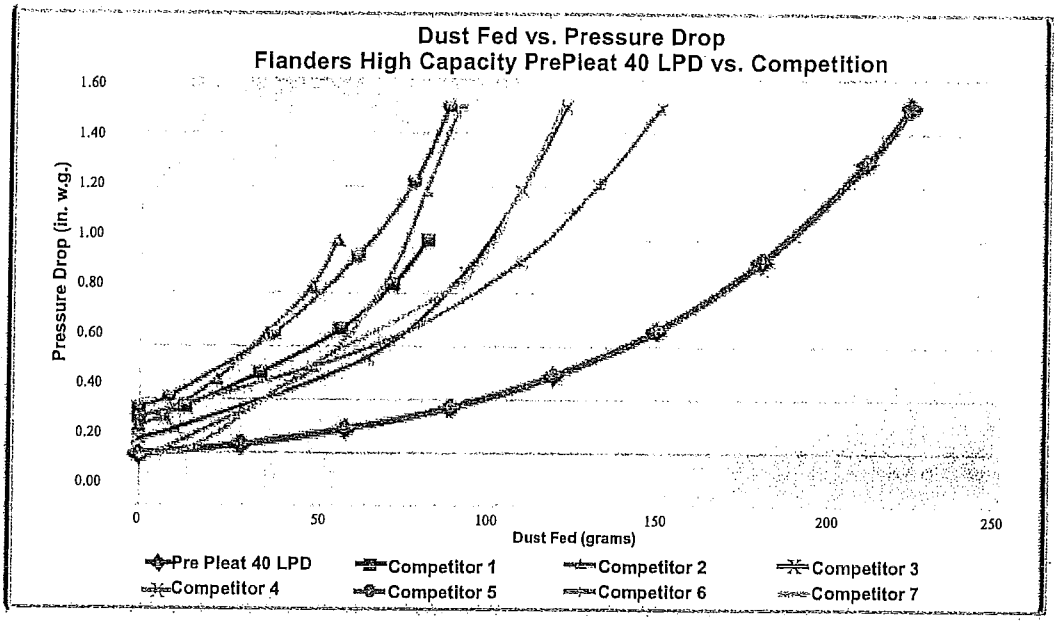

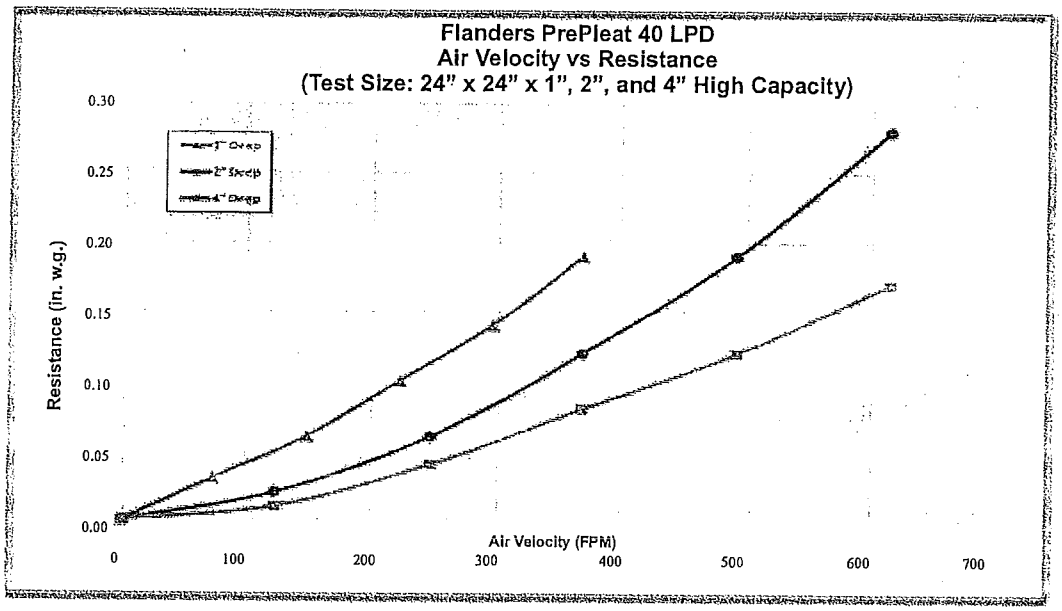

Notes:

1. The Pre Pleat 40 LPD maintains efficiency values during conditioning tests.
2. A nominal 24" x 24" x 2" High Capacity pleat has a dust holding capacity of 195 grams.
3. All data per ASHRAE 52.2, latest revision. Independent test reports are available upon request.

Flanders
FOREMOST IN AIR FILTRATION

Flanders Corporation
531 Flanders Filters Road
Washington, NC 27889

Phone: (252) 946-8081
Fax: (252) 946-3425
Toll Free: (800) 637-2803
Website: www.flanderscorp.com

REPRESENTED BY:

viledon® Mini 95

GREENGUARD INDOOR AIR QUALITY CERTIFIED®

Pleated Filter — MERV 14

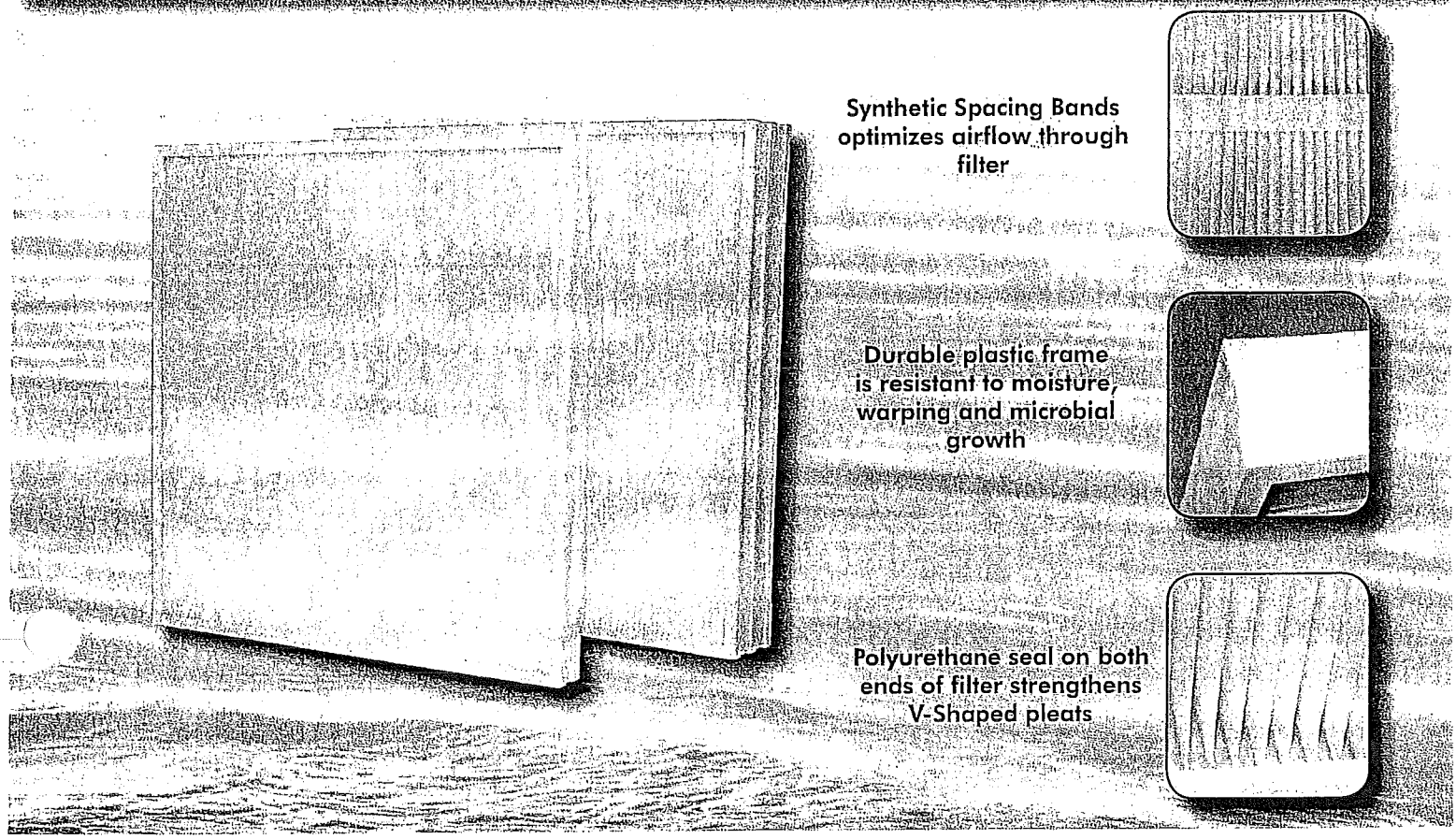

viledon Mini pleated filter meets all requirements of standard air handling systems as to frame dimensions, depth and filter performance. viledon's filtration superiority, known as the **viledon difference**, is highlighted by the following:

▶The viledon Mini 95 is specifically designed for applications where maximum filtration efficiency and performance are required in a light weight small package.

▶viledon develops and manufactures its own organic synthetic filter media. The large media area of the filter provides an exceptionally low pressure drop.

▶The 100% synthetic media will not absorb moisture and maintains integrity even in wet conditions. The media is also resistant to most common chemicals.

▶The lightweight all-plastic filter is free of metal parts, thus eliminating the risk of corrosion and punctures and is completely incinerable.

▶Temperature Resistance: 160°F, peaks 175°F

▶UL 900 Class 1

▶Covered by U.S. patent 646745

▶NYC MEA 438:00-M:11 Certification

Freudenberg
Filtration Technologies

Freudenberg

Technical Data- viledon MINI 95-24x24

viledon®

Particle Size Efficiency

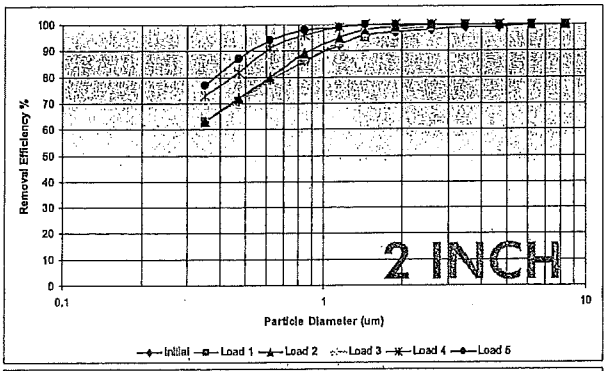

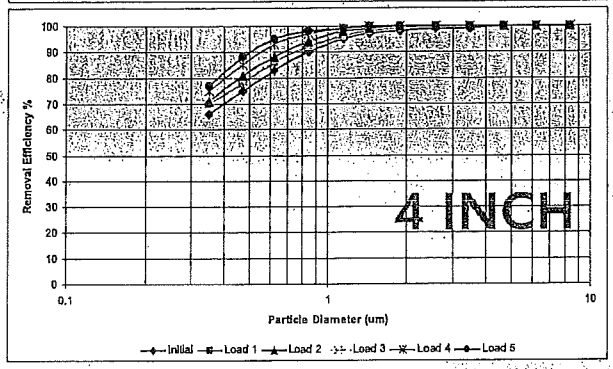

Resistance Curve

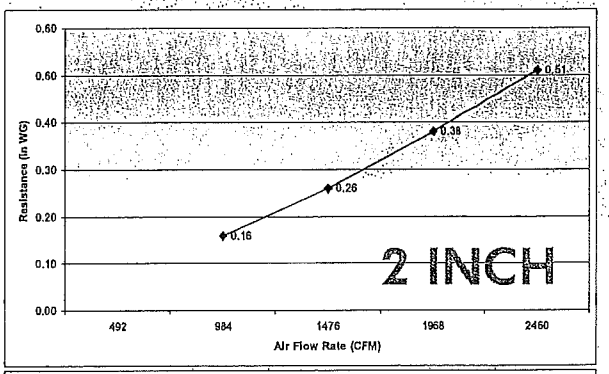

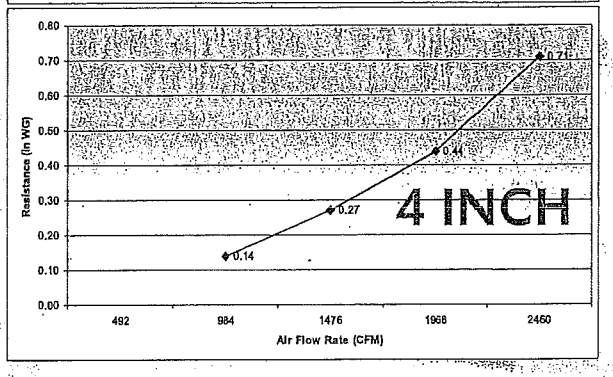

ASHRAE 52.2

MINI 95 2" RTI-AY03160101
MINI 95 4" RTI-AY03140102

Performance	Unit	MINI 95-2"	MINI 95-4"
Rated Air Flow	CFM	1968	1968
Initial Resistance	"w.g.	.38	.44
Final Resistance*	"w.g.	1.5	1.5
MERV@1968	1-16	14	14
ASHRAE 52.1 Equivalent Efficiency*	%	90-95%	90-95%
Media Area	ft²	52	83

Performance	Unit	MINI 95
Burst Strength	"w.g.	>4

MINI 95 Characteristic Chart

Sizes	Unit	24x24	12x24	20x24	20x25	20x20	16x25	16x20
Actual Size (HxW)	in	23-3/8x23-3/8	11-3/8x23-3/8	19-3/8x23-3/8	19-3/8x24-3/8	19-3/8x19-3/8	15-3/8x24-3/8	15-3/8x19-3/8
Depth 2"	in	1 3/4	1 3/4	1 3/4	1 3/4	1 3/4	1 3/4	1 3/4
Depth 4	in	3-3/4	3-3/4	3-3/4	3-3/4	3-3/4	3-3/4	3-3/4

The figures given are mean values subject to tolerances due to normal production fluctuations. Our explicit written confirmation is always required for the correctness and applicability of the information involved in any particular case.

viledon® is a registered trademark of Freudenberg

Freudenberg Filtration Technologies LP
2975 Pembroke Road
Hopkinsville, Ky 42240
Tel: 1-270-887-5145
Fax: 1-270-890-0743
www.freudenberg-filter.com

Flanders/FFI®

FOREMOST IN AIR FILTRATION

Vaporclean

Vapor Phase Air Filter

Bulletin PB1209-1206

Vaporclean

The Flanders Vaporclean vapor phase adsorbers are designed for removal of molecular contaminants at low concentration levels while utilizing the proven technology of dry processed carbon composite media, (DPCC). The adsorbers provide high efficiency removal of multiple contaminants for applications within museums, archive storage facilities, airports and semiconductor fabrication facilities.

Technical Description

The carbon media is manufactured with a dry processed carbon composite of ultrafine 30 x 50 mesh activated carbon with a minimum carbon tetrachloride activity of 90% per ASTM D-3467. The high efficiency carbon granules are thermally bonded to polyester nonwoven bicomponent fibers. The pleated media pack is contained within a 24 ga corrosion resistant steel casing and bonded with a polymide hot melt adhesive to maintain rigidity and eliminate air bypass. Pleat spacing and alignment is maintained with high impact polystyrene plastic separators installed on both air entering and leaving sides.

Product Options

The Vaporclean adsorbers are available with five contaminant specific dry processed carbon composites.

DPCC Grade	Application
1501	Effective removal of gas mixtures consisting of aldehyde, acid gases and hydrocarbons.
1076	Effective removal of ozone,hydrocarbons & volatile organic compounds.
1073	Effective removal of acid gases such as SO2 and NO2.
1209	Multipurpose blend for both alkaline and acid gases.
1090	Effective removal of alkaline gases such as ammonia and other light organic ammine compounds.

Important Features

- Maximized carbon surface area
- Increased efficiency and capacity
- Low initial static pressure
- Consistent carbon distribution
- Non-dusting media

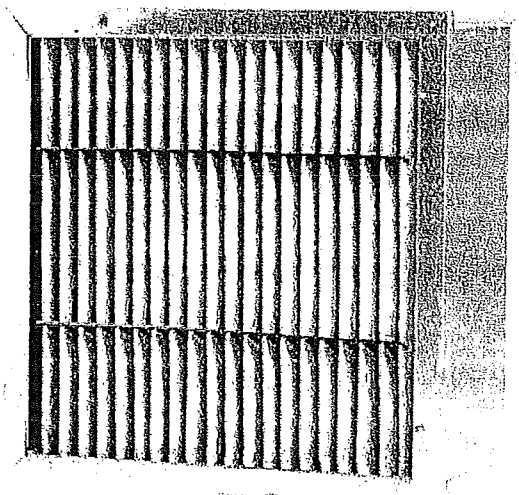

Vaporclean Performance

The pressure drop of the Vaporclean is 0.35 inch w.g. at a face velocity of 500 fpm. The initial efficiency of the adsorber under the following conditions shall be met.

Contaminant	Challenge Concentration	Efficiency	Capacity @ 50% Efficiency
Toluene	25 ppm	>90%	560 grams
SO2	30 ppm	>90%	60 grams
NO2	5 ppm	>70%	100 grams
Formaldehyde	500 ppb	>80%	4 grams

Contaminant Matching

Match the Vaporclean media type to the contaminant of concern.

HC Hydrocarbons HCOH Formaldehyde AG	Acid
Gases NH3 Ammonia O3	Ozone

Application Media	
Animal Odors	1090
Diesel Exhaust	1501
Cooking Odors	1501
Museums	1073
Sewer Odors	1075

Relative Effectiveness of Different Vaporclean Adsorbers on Different Contaminants

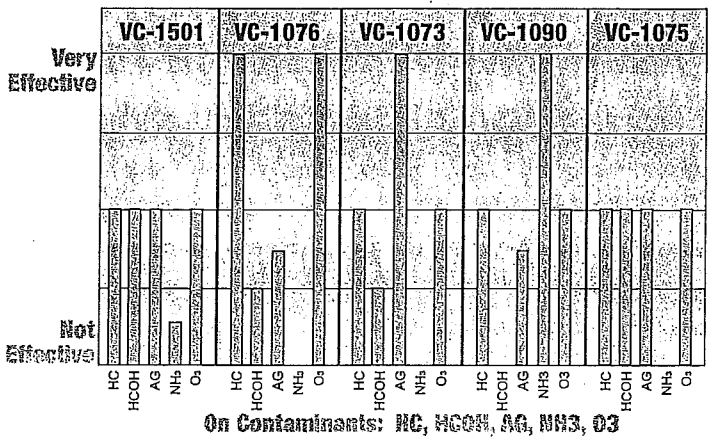

Sample Model Number

VC					
Vaporclean	Media type	24 ga	Frame Style	Size	Gasket

Represents a Vaporclean, 24 ga corrosion resistant steel frame, single header style, gasketed downstream, with 1501 media. Actual filter size is 23-3/8 x 23-3/8 x 11-1/2"

NOTE:

1. The 17-01 indicates a header style filter and 17-00 indicates a box style filter. Other frame materials, frame styles and sizes are available. Consult the factory.
2. Maximum operating temperature is 120°F.
3. Frame Style: 01 for Single Header or 00 for Box Style.
4. Gasket: 00 for no gasket or GU for gasket upstream or GD for gasket downstream.

Flanders/FFI ®

Flanders Filters, Inc.
531 Flanders Filter Road
Washington, NC 27889

Phone: (252) 946-8081
Toll Free: (800) 637-2803
Fax: (252) 946-3425

Website: www.flanderscorp.com

REPRESENTED BY:

type 8 frame

ASHRAE Filter Holding Frame for Built-Up Bank

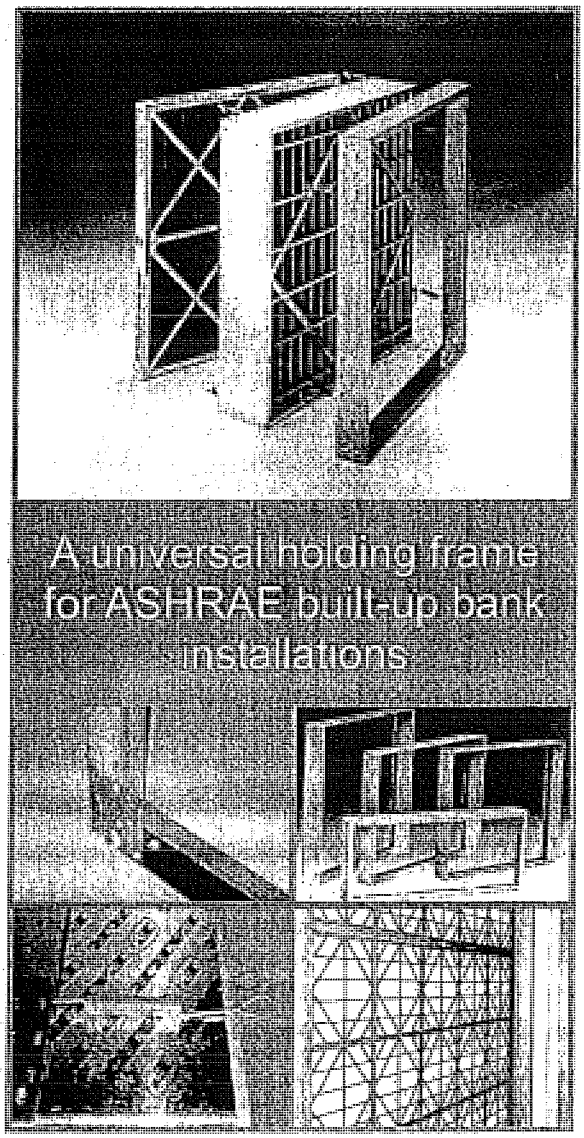

Top: Type 8 corner showing centering dimples, lances, welded construction and filter sealing gasket

Top: Available in various sizes and in stainless steel

Bottom: C-80 fastener and rigid filter installed, applying 25 pounds of filter sealing pressure

Bottom: Built-up bank, may be assembled to 6 units high

camfil FARR

Universal Application

The Camfil Farr Type 8 filter holding frame, with a variety of fasteners, will allow the installation of various combinations of ASHRAE prefiltration and final filtration. The installation may include any, or combinations of the following:

- Any 1" deep panel or pleated filter
- Any 2" deep panel or pleated filter
- Any 4" deep panel or pleated filter
- Any 6" or 12" deep rigid filter
- Any headered style rigid or pocket filter

System Integrity

The Camfil Farr Type 8 holding frame includes:

- 16-gauge welded galvanized steel construction.
- A 3/4" filter sealing flange to assure proper filter seating and sealing.
- Filter centering dimples for ease of installation and to assure proper filter to gasket alignment.
- Polyurethane gasketing on the frame to filter sealing surface to assure leak free performance in the most demanding of applications.
- Pre-drilled holes for riveting or bolt-together installation of built-up banks.
- Multiple lances for the application of various fasteners to install a wide variety of standard size air filter.

The Camfil Farr Type 8 holding frame:

- May be assembled in banks up to six units high and any number of units wide (flat stock vertical stiffener bars are required for banks 4 to 6 units high alternating every other filter frame).
- May be applied in applications to remove water or oil mist.
- May be assembled in a V-bank configuration to reduce filter face velocity.

Camfil Farr	Product sheet
Type 8 Frame	2301 - 0606
Camfil Farr—clean air solutions	

PERFORMANCE DATA

Type 8 Frame

Part Number	Actual Depth (inches)	Actual Dimensions (inches)		Weight (lbs)
		Height	Width	
Standard Built-up Bank Application				
079473-004	2.69	24	12	4.3
079473-006		20	16	4.4
079473-005		25	16	5.0
079473-002		20	20	4.9
079473-003		25	20	5.5
079473-007		24	20	5.4
079473-001		24	24	6.0
Frames for HP Basket Assembly Applications				
050028-001	2.69	24	24	6.0
050028-004		24	12	4.3

Available options:

Available with or without gasket (standard units include gasket).

Available in 20-gauge stainless steel, 304, 304L, 316, 316L and 430.

For fasteners please consult Camfil Farr Bulletin 2902-0302.

DATA NOTES:
Flat-stock stiffener bars are required for every other vertical row on filter banks 4 to 6 units high. Stiffener bars, screws, nuts, and rivets are not supplied by Camfil Farr. Consult drawing B-073617.
For V-bank assembly consult drawing C-093248.
For mist removal installation consult drawing C-067125.

SPECIFICATIONS

1.0 General

1.1 - Air filter holding frames shall be 16-gauge galvanized steel with filter sealing flange, centering dimples, sealing gasket and lances for appropriate air filter fasteners.

1.2 - Sizes shall be noted on drawings or other supporting materials.

2.0 Construction

2.1 - Filter holding frame shall be constructed of 16-gauge galvanized steel. The frame shall be assembled from two corner sections and welded to assure a rigid and durable frame assembly.

2.2 - The frame shall include a variety of pre-punched lances for filter fastener attachment. Fastener shall be capable of being installed without the use of tools, nuts or bolts. Lance penetrations shall be upstream of filter flange to assure leak-free integrity.

2.3 - The frame shall include filter centering dimples on each frame wall to facilitate ease of filter installation and assure filter centering against filter sealing flange.

2.4 - A 3/4" filter sealing flange shall be an integral component of the holding frame. All corners shall be flush mitered and a permanently mounted polyurethane foam gasket shall be mounted on the sealing flange to assure filter to frame sealing integrity.

3.0 Performance

3.2 - Manufacturer shall provide evidence of facility certification to ISO 9001:2000.

Camfil Farr has a policy of uninterrupted research, development and product improvement. We reserve the right to change designs and specifications without notice.

Camfil Farr, Inc.
United States Tel: (973) 616-7300 Fax: (973) 616-7771
Canada Tel: (450) 629-3030 Fax: (450) 662-6035
E-mail: camfilfarr@camfilfarr.com

© Camfil Farr

http://www.camfilfarr.info
http://www.camfilfarr.com

Series 2000

Magnehelic® Differential Pressure Gages

Indicate Positive, Negative or Differential, Accurate within 2%

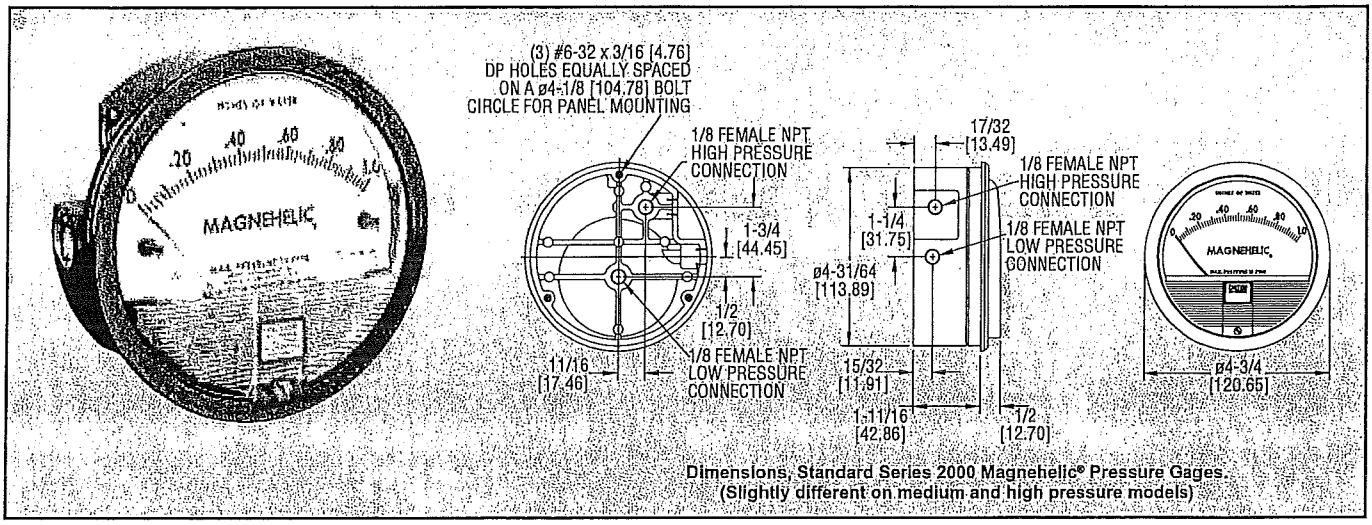

Dimensions, Standard Series 2000 Magnehelic® Pressure Gages. (Slightly different on medium and high pressure models)

Select the Dwyer® Magnehelic® gage for high accuracy – guaranteed within 2% of full scale – and for the wide choice of 81 models available to suit your needs precisely. Using Dwyer's simple, frictionless Magnehelic® gage movement, it quickly indicates low air or non-corrosive gas pressures – either positive, negative (vacuum) or differential. The design resists shock, vibration and over-pressures. No manometer fluid to evaporate, freeze or cause toxic or leveling problems. It's inexpensive, too.

The Magnehelic® gage is the industry standard to measure fan and blower pressures, filter resistance, air velocity, furnace draft, pressure drop across orifice plates, liquid levels with bubbler systems and pressures in fluid amplifier or fluidic systems. It also checks gas-air ratio controls and automatic valves, and monitors blood and respiratory pressures in medical care equipment.

Note: May be used with Hydrogen. When ordering a Buna-N diaphragm pressures must be less than 35 psi.

Mounting

A single case size is used for most models of Magnehelic® gages. They can be flush or surface mounted with standard hardware supplied. With the optional **A-610** Pipe Mounting Kit they may be conveniently installed on horizontal or vertical 1-1/4" - 2" pipe. Although calibrated for vertical position, many ranges above 1" may be used at any angle by simply re-zeroing. However, for maximum accuracy, they must be calibrated in the same position in which they are used. These characteristics make Magnehelic® gages ideal for both stationary and portable applications. A 4-9/16" hole is required for flush panel mounting. Complete mounting and connection fittings plus instructions are furnished with each instrument.

Flush...Surface... or Pipe Mounted

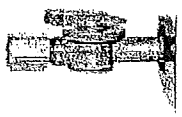

Vent Valves

In applications where pressure is continuous and the Magnehelic® gage is connected by metal or plastic tubing which cannot be easily removed, we suggest using Dwyer A-310A vent valves to connect gage. Pressure can then be removed to check or re-zero the gage.

High and Medium Pressure Models

Installation is similar to standard gages except that a 4-13/16" hole is needed for flush mounting. The medium pressure construction is rated for internal pressures up to 35 psig and the high pressure up to 80 psig. Available for all models. Because of larger case, the medium pressure and high pressure models will not fit in a portable case size. Installation of the A-321 safety relief valve on standard Magnehelic® gages often provides adequate protection against infrequent overpressure.

SPECIFICATIONS

Service: Air and non-combustible, compatible gases. (Natural Gas option available.)
Wetted Materials: Consult factory.
Housing: Die cast aluminum case and bezel, with acrylic cover. Exterior finish is coated gray to withstand 168 hour salt spray corrosion test.
Accuracy: ±2% of full scale (±3% on - 0, -100 Pa, -125 Pa, 10MM and ±4% on - 00, -60 Pa, -6MM ranges), throughout range at 70°F (21.1°C).
Pressure Limits: -20" Hg. to 15 psig.† (-0.677 bar to 1.034 bar); MP option: 35 psig (2.41 bar), HP option: 80 psig (5.52 bar).
Overpressure: Relief plug opens at approximately 25 psig (1.72 bar), standard gages only.
Temperature Limits: 20 to 140°F.* (-6.67 to 60°C).
Size: 4" (101.6 mm) Diameter dial face.
Mounting Orientation: Diaphragm in vertical position. Consult factory for other position orientations.
Process Connections: 1/8" female NPT duplicate high and low pressure taps - one pair side and one pair back.
Weight: 1 lb 2 oz (510 g), MP & HP 2 lb 2 oz (963 g).
Standard Accessories: Two 1/8" NPT plugs for duplicate pressure taps, two 1/8" pipe thread to rubber tubing adapter and three flush mounting adapters with screws. (Mounting and snap ring retainer substituted for 3 adapters in MP & HP gage accessories.)

*Low temperature models available as special option.
†For applications with high cycle rate within gage total pressure rating, next higher rating is recommended. See Medium and High pressure options at lower left.

OPTIONS AND ACCESSORIES

Transparent Overlays

Furnished in red and green to highlight and emphasize critical pressures.

Adjustable Signal Flag

Integral with plastic gage cover. Available for most models except those with medium or high pressure construction. Can be ordered with gage or separate.

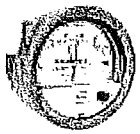

LED Setpoint Indicator

Bright red LED on right of scale shows when setpoint is reached. Field adjustable from gage face, unit operates on 12-24 VDC. Requires MP or HP style cover and bezel.

A-432 Portable Kit

Combine carrying case with any Magnehelic® gage of standard range, except high pressure connection. Includes 9 ft (2.7 m) of 3/16" I.D. rubber tubing, standhang bracket and terminal tube with holder.

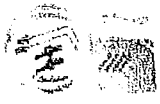

A-605 Air Filter Gage Accessory Kit

Adapts any standard Magnehelic® gage for use as an air filter gage. Includes aluminum surface mounting bracket with screws, two 5 ft (1.5 m) lengths of 1/4" aluminum tubing two static pressure tips and two molded plastic vent valves, integral compression fittings on both tips and valves.

Quality design and construction features

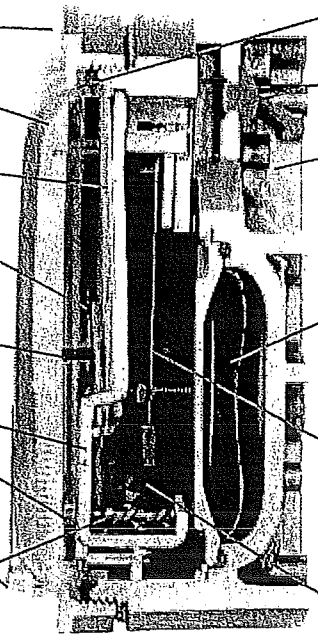

Bezel provides flange for flush mounting in panel.

Clear plastic face is highly resistant to breakage. Provides undistorted viewing of pointer and scale.

Precision litho-printed scale is accurate and easy to read.

Red tipped pointer of heat treated aluminum tubing is easy to see. It is rigidly mounted on the helix shaft.

Pointer stops of molded rubber prevent pointer over-travel without damage.

"Wishbone" assembly provides mounting for helix, helix bearings and pointer shaft.

Jeweled bearings are shock-resistant mounted; provide virtually friction-free motion for helix. Motion damped with high viscosity silicone fluid.

Zero adjustment screw is conveniently located in the plastic cover, and is accessible without removing cover. O-ring seal provides pressure tightness.

Helix is precision made from an alloy of high magnetic permeability. Mounted in jeweled bearings, it turns freely, following the magnetic field to move the pointer across the scale.

O-ring seal for cover assures pressure integrity of case.

Blowout plug of silicone rubber protects against overpressure on 15 psig rated models. Opens at approximately 25 psig.

Die cast aluminum case is precision made and iridite-dipped to withstand 168 hour salt spray corrosion test. Exterior finished in baked dark gray hammerloid. One case size is used for all standard pressure options, and for both surface and flush mounting.

Silicone rubber diaphragm with integrally molded O-ring is supported by front and rear plates. It is locked and sealed in position with a sealing plate and retaining ring. Diaphragm motion is restricted to prevent damage due to overpressures.

Calibrated range spring is flat spring steel. Small amplitude of motion assures consistency and long life. It reacts to pressure on diaphragm. Live length adjustable for calibration.

Samarium Cobalt magnet mounted at one end of range spring rotates helix without mechanical linkages.

Series 2000 Magnehelic® Gage — Models and Ranges

Page V shows examples of special models built for OEM customers. For special scales furnished in ounces per square inch, inches of mercury, metric units, square root scales for volumetric flow, etc., contact the factory.

Model	Range Inches of Water
2000-00N†••	.05-0-.2
2000-00†••	0-.25
2000-0†•	0-.50
2001	0-1.0
2002	0-2.0
2003	0-3.0
2004	0-4.0
2005	0-5.0
2006	0-6.0
2008	0-8.0
2010	0-10
2012	0-12
2015	0-15
2020	0-20
2025	0-25
2030	0-30
2040	0-40
2050	0-50
2060	0-60
2080	0-80
2100	0-100
2120	0-120
2150	0-150
2160	0-160
2180	0-180
2250	0-250
Zero Center Ranges	
2300-00†••	0.125-0-0.125
2300-0†•	.25-0-.25
2301	.5-0-.5
2302	1-0-1
2304	2-0-2
2310	5-0-5
2320	10-0-10
2330	15-0-15

Model	Range PSI
2201	0-1
2202	0-2
2203	0-3
2204	0-4
2205	0-5
2210*	0-10
2215*	0-15
2220*	0-20
2230**	0-30

Model	Range, CM of Water
2000-15CM	0-15
2000-20CM	0-20
2000-25CM	0-25
2000-50CM	0-50
2000-80CM	0-80
2000-100CM	0-100
2000-150CM	0-150
2000-200CM	0-200
2000-250CM	0-250
2000-300CM	0-300
Zero Center Ranges	
2300-4CM	2-0-2
2300-10CM	5-0-5
2300-30CM	15-0-15

†These ranges calibrated for vertical scale position.
• Accuracy +/-3%
•• Accuracy +/-4%
*MP option standard
**HP option standard

Model	Range MM of Water
2000-6MM†••	0-6
2000-10MM†•	0-10
2000-15MM	0-15
2000-25MM	0-25
2000-30MM	0-30
2000-50MM	0-50
2000-80MM	0-80
2000-100MM	0-100
2000-125MM	0-125
2000-150MM	0-150
2000-200MM	0-200
2000-250MM	0-250
2000-300MM	0-300
Zero Center Ranges	
2300-6MM†••	3-0-3
2300-10MM†•	5-0-5
2300-20MM†•	10-0-10

Model	Range, Pa
2000-60NPA†••	10-0-50
2000-60PA†••	0-60
2000-100PA†•	0-100
2000-125PA†•	0-125
2000-250PA	0-250
2000-300PA	0-300
2000-500PA	0-500
2000-750PA	0-750
2000-1000PA	0-100 x 10
Zero Center Ranges	
Model	Range, Pa
2300-60PA†••	30-0-30
2300-100PA†•	50-0-50
2300-120PA	60-0-60
2300-200PA	100-0-100
2300-250PA	125-0-125
2300-300PA	150-0-150
2300-500PA	250-0-250
2300-1000PA	500-0-500

Model	Range, kPa
2000-0.5KPA	0-0.5
2000-1KPA	0-1
2000-1.5KPA	0-1.5
2000-2KPA	0-2
2000-2.5KPA	0-2.5
2000-3KPA	0-3
2000-4KPA	0-4
2000-5KPA	0-5
2000-8KPA	0-8
2000-10KPA	0-10
2000-15KPA	0-15
2000-20KPA	0-20
2000-25KPA	0-25
2000-30KPA	0-30
Zero Center Ranges	
2300-1KPA	.5-0-.5
2300-2KPA	1-0-1
2300-2.5KPA	1.25-0-1.25
2300-3KPA	1.5-0-1.5

Dual Scale Air Velocity Units For use with pitot tube	
Model	Range in W.C./ Velocity F.P.M.
2000-00AV†••	0-.25/300-2000
2000-0AV†•	0-.50/500-2800
2001AV	0-1.0/500-4000
2002AV	0-2.0/1000-5600
2005AV	0-5.0/2000-8800
2010AV	0-10/2000-12500

Dual Scale English/Metric Models		
Model	Range, In. W.C.	Range, Pa or kPa
2000-OOD†••	0-.25	0-62 Pa
2000-OD†•	0-0.5	0-125 Pa
2001D	0-1.0	0-250 Pa
2002D	0-2.0	0-500 Pa
2003D	0-3.0	0-750 Pa
2004D	0-4.0	0-1.0 kPa
2005D	0-5.0	0-1.25 kPa
2006D	0-6.0	0-1.5 kPa
2008D	0-8.0	0-2.0 kPa
2010D	0-10	0-2.5 kPa
2015D	0-15	0-3.7 kPa
2020D	0-20	0-5 kPa
2025D	0-25	0-6.2 kPa
2050D	0-50	0-12.4 kPa
2060D	0-60	0-15 kPa

ACCESSORIES

A-299, Surface Mounting Bracket
A-300, Flat Flush Mounting Bracket
A-310A, 3-Way Vent Valve
A-321, Safety Relief Valve
A-432, Portable Kit
A-448, 3-piece magnet kit for mounting Magnehelic® gage directly to magnetic surface
A-605, Air Filter Kit
A-610, Pipe Mount Kit

OPTIONS — To order, add suffix: I.E. 2001-ASF
ASF, Adjustable Signal Flag
HP, High Pressure Option
LT, Low Temperatures to -20°F
MP, Med. Pressure Option
SP, Setpoint Indicator
Scale Overlays, Red, Green, Mirrored or Combination, Specify Locations

Series 2000 Magnehelic® Air Filter Gages

Specifications - Installation and Operating Instructions

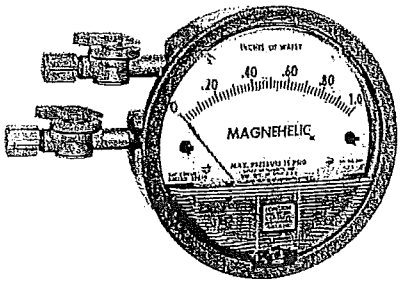

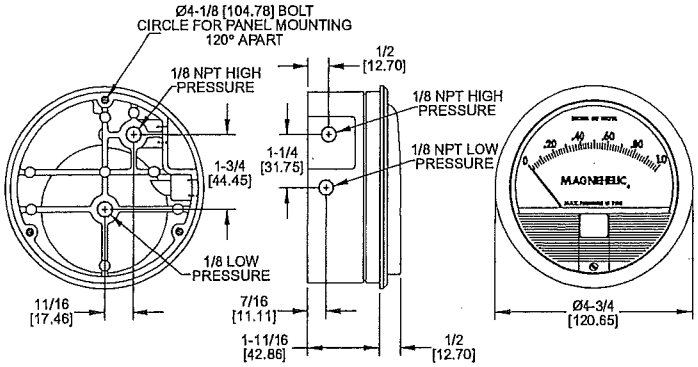

The Magnehelic® gage consists of two pressure-tight compartments separated by a molded flexible diaphragm.

The interior of the gage case serves as the "high" pressure compartment and a sealed chamber behind the diaphragm serves as the "low" pressure compartment.

Differences in pressure between the "high" and "low" sides of the diaphragm cause the diaphragm to assume a balanced position between the two pressures. The front support plate of the diaphragm is linked to a leaf spring which is anchored at one end. The spring provides calibrated resistance to the diaphragm motion. Motion of the spring is transmitted through an exclusive magnetic linkage to the pointer.

The Magnehelic® gage requires no maintenance. The only field adjustment required is occasional zero setting of the pointer which is done by opening the plastic vent valves and turning the adjustment of the gage.

STANDARD ACCESSORIES FURNISHED

Two 1/8" NPT plugs for duplicate pressure taps, two 1/8" pipe thread to rubber tubing adapter and three flush mounting adapters with screws. (Mounting and snap ring retainer substituted for 3 adapters in MP & HP gage accessories.)

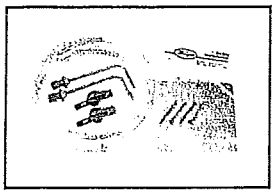

Air Filter accessories furnished are mounting panel with necessary screws, two static pressure tips with integral compression fittings, two five foot lengths of 1/4" aluminum tubing and the two molded plastic vent valve with compression fittings.

The Magnehelic® gage with molded plastic vent valves for easy zeroing. Available with adjustable signal flag (not shown; option "ASF" at extra cost) for immediate visual reference to maximum allowable pressure drop; External front screw for zero adjustment. Red and green scale overlays to highlight safe and dangerous readings are also available.

FEATURES

- Easiest reading for personnel accustomed to dial type gages.
- Lowest cost pointer type gage.
- Easy zeroing with molded plastic vent valves.
- Sensitivity to 0.01" w.c.
- Withstands vibration.
- Unaffected by over range pressure surges.

SPECIFICATIONS

Service: Air and non-combustible, compatible gases. (Natural Gas option available.)
Wetted Materials: Consult Factory.
Housing: Die cast aluminum case and bezel, with acrylic cover, Exterior finish is coated gray to withstand 168 hour salt spray corrosion test.
Accuracy: ±2% of full scale (±3% on - 0 and ±4% on - 00 ranges), throughout range at 70°F (21.1°C).
Pressure Limits: -20" Hg. to 15 psig.† (-0.677 bar to 1.034 bar); MP option; 35 psig (2.41 bar), HP option; 80 psig (5.52 bar).
Overpressure: Relief plug opens at approximately 25 psig (1.72 kPa), standard gages only.
Temperature Limits: 20 to 140°F.* (-6.67 to 60°C).
Size: 4" (101.6 mm) Diameter dial face.
Mounting Orientation: Diaphragm in vertical position. Consult factory for other position orientations.
Process Connections: 1/8" female NPT duplicate high and low pressure taps - one pair side and one pair back.
Weight: 1 lb 2 oz (510 g), MP & HP 2 lb 2 oz (963 g).

* Low temperature models available as special option.
† For applications with high cycle rate within gage total pressure rating, next higher rating is recommended. See Medium and High pressure options at lower left.

OPERATING RANGES AVAILABLE

Model Number	Range	Minor Divisions
2000-0-AF	0-.5" water	0.01"
2001-AF	0-1" water	0.02"
2002-AF	0-2" water	0.05"
2003-AF	0-3" water	0.10"
2004-AF	0-4" water	0.10"

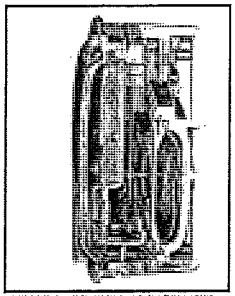

Cutaway view of the Magnehelic® gage showing the actuating diaphragm, the leaf spring with magnet, the helix which turns the indicating pointer in response to the position of the magnet without mechanical linkages.

DWYER INSTRUMENTS, INC.
P.O. BOX 373 • MICHIGAN CITY, INDIANA 46361, U.S.A.
Phone: 219/879-8000
Fax: 219/872-9057
www.dwyer-inst.com
e-mail: info@dwyer-inst.com

Options Not Shown:
- Automatic signal flag integral with plastic gage cover.
- Not shown Scale plate overlays in green and red.

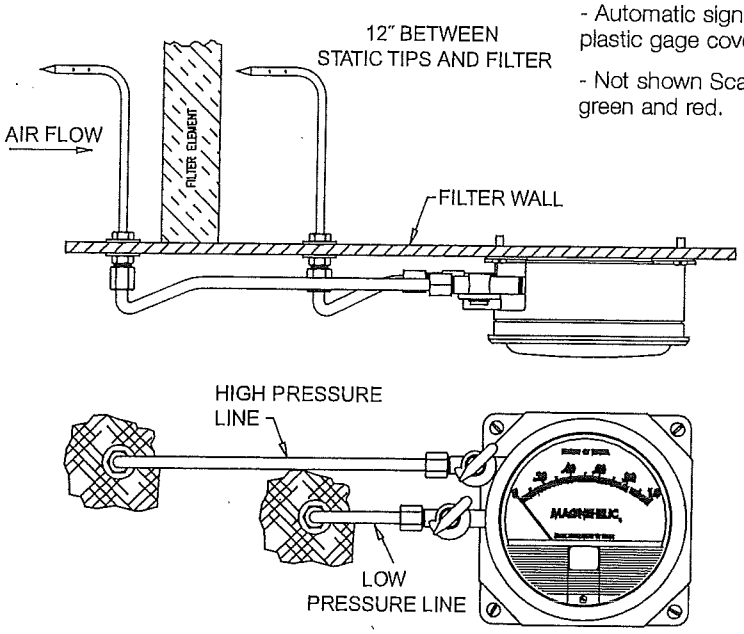

INSTALLATION PROCEDURE

1. Screw vent valves into side connections of gage. Be sure back connections of gage are sealed with plugs provided with the gage. Attach gage to mounting plate with three No. 6-32 screws provided.

2. Select a convenient location on filter wall and punch or drill four 1/8" dia. max. holes for mounting plate as shown in drawing above. Attach mounting plate to filter wall with four self-tapping screws provided. If gage is to be flush mounted in control panel, refer to Bulletin No. A-27.

3. Drill two 7/16" holes in the duct, one on each side of the filter and at least 12" distant*. Secure the static pressure tips as in the drawing above, with the tips directed into the air flow.

4. Connect 1/4" metal tubing from the static pressure tips to the gage. The tip on the downstream side of the filter is connected to the vent valve in the low pressure connection of the gage. The tip on the upstream side is connected to the vent valve in the high pressure connection.

5. Turn both vent valves to "VENT" position and adjust the gage pointer to zero by means of the external adjustment screw in the face of the gage. After zeroing, turn vent valves to "LINE" position.

***NOTE On location of static pressure tips:** The location of static pressure tips is of primary importance in securing reliable readings. For maximum accuracy, it is essential that the influence of the velocity of the air be eliminated to permit sensing the true static pressure. Note that some installations do not provide a straight duct approach to the filter bank which may cause air to swirl and eddy.

Tips should be located as recommended by the specifying engineer or by the filter manufacturer. In the absence of such recommendations, locate the tips at least 12" upstream and downstream from the filters in a zone of minimum turbulence.

INSTALLATION CHECK AND TROUBLE SHOOTING

Before putting your air filter gage into service or in the event of initial pressure drop readings that do not agree with the filter manufacturer's specified pressure drop, make the following checks:

1. Check zero adjustment of the gage as described above.
2. Check all tubing connections for tightness from the gage to the static tip or fitting connection.
3. Check plastic cover of gage to be sure it is securely in place and air tight.
4. Check static pressure tips or fittings to be sure they are not plugged.
5. Check installation of static tips or fittings*. Be sure static pressure tips point directly into the air stream. A velocity pressure error can be created if the air blows directly into the opening.

OPERATION

With vent valves in "LINE" position the gage will indicate pressure drop across the filter. If the reading varies substantially from the filter manufacturer's rating for a clean filter, check the system for proper setting of controls, air balancing of system, leakage in system and whether or not the correct filter has been installed.

When pressure drop across the filter reaches the minimum recommended by the manufacturer, the filter should be serviced or replaced.

©Copyright 2003 Dwyer Instruments, Inc.
Printed in U.S.A. 8/03 FR# 12-440238-00 Rev. 2

DWYER INSTRUMENTS, INC.
P.O. BOX 373 • MICHIGAN CITY, INDIANA 46361, U.S.A.
Phone: 219/879-8000 Fax: 219/872-9057
www.dwyer-inst.com e-mail: info@dwyer-inst.com

6
Dampers

RUSKIN®

3900 Dr. Greaves Rd. • Kansas City, MO 64030 • (816) 761-7476 • FAX (816) 765-8955

CD102 CONTROL DAMPER
OD102 FAN OUTLET DAMPER
Aluminum Airfoil Blades

STANDARD CONSTRUCTION

FRAME
8" x 2" x 12 gage (203 x 51 x 2.8) steel channel.

BLADES
7¾ " (197) wide, .080 (2.1) thick, 6063T5 extruded aluminum airfoil blade.

AXLES
¾ " (19) diameter plated steel.

BEARINGS
CD102 - Stainless steel sleeve pressed into frame.
OD102 - Stainless steel bolted to frame.

LINKAGE
Side linkage out of airstream; 10 gage (3.5) galvanized steel clevis-type arms, 3/16 " x ¾ " (4.8 x 19) plated steel tie bars and ⅜ " diameter (9.5) stainless steel pivot pins with lock-type retainers.

OPERATING LEVER
Hand Quadrant for manual operation. A crank lever for motor operation is available at no extra cost.

FINISH
Mill galvanized frame with mill finish blades.

MAXIMUM TEMPERATURE
300°F (149°C) maximum.

MINIMUM SIZE
Single blade damper – 6"w x 6"h (152 x 152).
Multiple blade damper – 6"w x 14"h (152 x 356).

MAXIMUM SIZE
60"w x 96"h (1524 x 2438).

VARIATIONS

The CD/OD102 can be furnished with a number of variations to meet special requirements. These variations, available at additional cost include:

- 10" (254) deep frame.
- Special finishes.
- Electric and pneumatic actuators.
- Other frame materials.

NOTE: Dimensions in parentheses ( ) indicate millimeters.

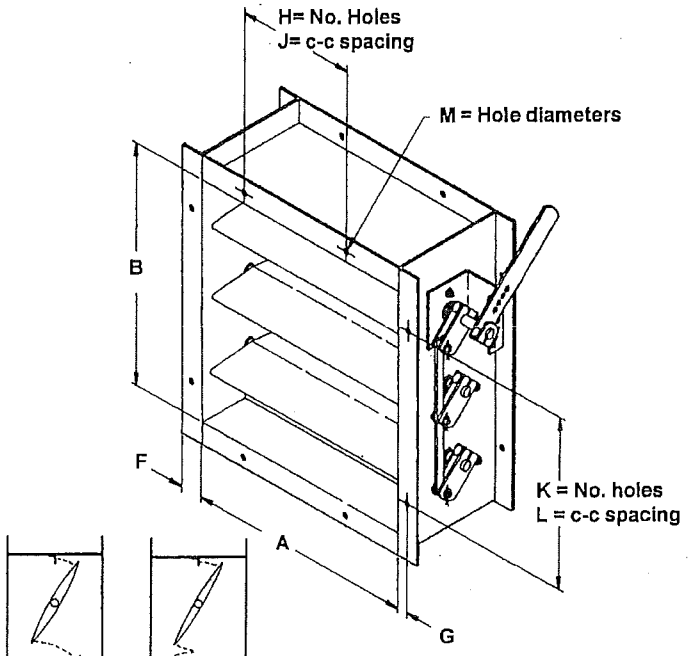

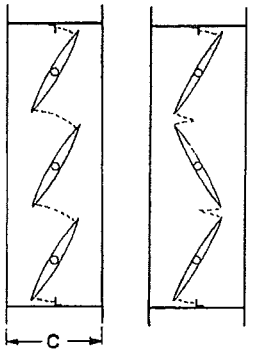

8" (203) Std. PARALLEL (PB)

OPPOSED (OB)

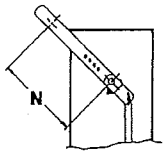

CRANK LEVER (CL)

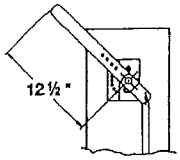

HAND QUADRANT (HQ)

FRAME	BLADES	AXLES	BEARINGS	LINKAGE	SEALS (OPT)	ACCESSORIES
8" x 2" x 12 GA (203 x 51 x 2.8) GALVANIZED STEEL	7¾" (197) WIDE .080" (2.1) THK 6063T6 EXTRUDED ALUMINUM AIRFOIL	¾" (19) DIA. 'D' PLATED STEEL	SS SLEEVE PRESSED INTO FRAME (STD ON CD102)	SIDE LINKAGE (CONCEALED)	BLADE SEALS SILICONE 400°F (204°C) MAX	HAND QUADRANT (HQ)
8" x 2" x 10 GA (203 x 51 x 3.5) GALVANIZED STEEL		¾" (19) DIA. 'D' STAINLESS STEEL (OPT)	SS SLEEVE IN CAST HSG BOLTED TO FRAME (STD ON OD102 OPT ON CD102)		SS JAMB SEALS	CRANK LEVER (CL)
8" x 2" .125 (203 x 51 x .3.2) ALUMINUM		¾" (19) DIA. 'D' ALUMINUM (OPT)	BOLT ON BRGS W/INTEGRAL SHAFT SEALS (OPT)			BOLT HOLES ONE FLANGE (OPT)
						BOLT HOLES BOTH FLANGES (OPT)
						PNEUMATIC ACTUATOR (OPT)
						ELECTRIC ACTUATOR (OPT)
						1½" (38) TO 4" (1D2) FLANGES (OPT)

QTY.	BLADE ACTION		DIMENSIONS										LEVER TYPE		COMMENTS	TAG
	PB	OB	A	B	C	F	G	H	J	K	L	M	HQ	CL		

JOB LOCATION

ARCH./ENGR. CONTRACTOR

REPRESENTATIVE DATE

ALL STATED SPECIFICATIONS ARE SUBJECT TO CHANGE WITHOUT NOTICE OR OBLIGATION. ©Ruskin 2005

PRESSURE DROP INFORMATION

AREA FACTOR TABLE

B Dimension Height in Inches (mm)	A Dimension—Width in Inches (mm)																		
	6" (152)	9" (229)	12" (305)	15" (381)	18" (457)	21" (533)	24" (610)	27" (686)	30" (762)	33" (838)	36" (914)	39" (991)	42" (1067)	45" (1143)	48" (1219)	51" (1295)	54" (1372)	57" (1448)	60" (1524)
6" (152)	6.65	4.43	3.33	2.66	2.22	1.90	1.66	1.48	1.33	1.21	1.11	1.02	.95	.89	.83	.85	.80	.76	.72
9" (229)	3.93	2.62	1.96	1.57	1.31	1.12	.98	.87	.79	.71	.65	.60	.56	.52	.49	.48	.46	.43	.41
12" (305)	2.75	1.84	1.38	1.10	.92	.79	.69	.61	.55	.50	.46	.42	.39	.37	.34	.34	.33	.31	.29
15" (381)	2.05	1.37	1.02	.82	.68	.59	.51	.46	.41	.37	.34	.32	.29	.23	.26	.25	.24	.23	.21
18" (457)	1.74	1.16	.87	.69	.58	.50	.43	.39	.35	.32	.29	.27	.25	.27	.22	.22	.20	.19	.18
24" (610)	1.27	.85	.63	.51	.42	.36	.32	.28	.25	.23	.21	.20	.18	.17	.16	.16	.15	.14	.13
30" (762)	.96	.64	.48	.39	.32	.28	.24	.21	.19	.18	.16	.15	.14	.13	.12	.12	.11	.11	.10
36" (914)	.80	.53	.40	.32	.27	.23	.20	.18	.16	.15	.13	.12	.11	.11	.10	.10	.09	.09	.08
42" (1067)	.68	.46	.34	.27	.23	.20	.17	.15	.14	.12	.11	.11	.10	.09	.09	.08	.08	.08	.07
48" (1219)	.60	.40	.30	.24	.20	.17	.15	.13	.12	.11	.10	.09	.09	.08	.07	.07	.07	.07	.06
54" (1372)	.53	.35	.26	.21	.18	.15	.13	.12	.11	.10	.09	.08	.08	.07	.07	.07	.06	.06	.06
60" (1524)	.47	.31	.23	.19	.16	.13	.12	.10	.09	.08	.08	.07	.07	.06	.06	.06	.05	.05	.05
66" (1676)	.42	.28	.21	.17	.14	.12	.11	.09	.08	.08	.07	.07	.06	.06	.05	.05	.05	.05	.04
72" (1829)	.39	.26	.19	.16	.13	.11	.10	.09	.08	.07	.06	.06	.06	.05	.05	.05	.04	.04	.04
78" (1981)	.36	.24	.18	.14	.12	.10	.09	.08	.07	.07	.06	.06	.05	.05	.04	.04	.04	.04	.04
84" (2134)	.33	.22	.17	.13	.11	.10	.08	.07	.07	.06	.06	.05	.05	.04	.04	.04	.04	.04	.03
90" (2286)	.31	.21	.16	.12	.10	.09	.08	.07	.06	.06	.05	.05	.04	.04	.04	.04	.04	.03	.03
96" (2438)	.29	.19	.14	.12	.10	.08	.07	.06	.06	.05	.05	.04	.04	.04	.04	.04	.03	.03	.03

DETERMINING PRESSURE DROP

Use the Area Factor Table and Pressure Drop Chart to determine pressure drop through Ruskin CD/OD102 Dampers.

1. Determine area factor for damper by entering the Area Factor Table through duct width and height.
2. Find the conversion velocity (CV) by multiplying the selected size damper's area factor by the flow rate in CFM:
   CV = Area Factor x CFM
3. Enter the Pressure Drop Chart at the determined area factor and proceed up to appropriate conversion velocity (CV) line. Then, read across to static pressure drop at left side of chart.

Example:

1. Find the pressure drop across an 18" wide x 18" high Model CD/OD102 Damper handling 8570 CFM. From the Area Factor Table, area factor is determined to be .58.
   CFM x AREA FACTOR EQUALS CONVERSION VELOCITY
2. Therefore, CV (Conversion Velocity) = 8570 CFM x .58 = 5000. Using the Pressure Drop Chart, pressure drop = .28 inches water gage.

NOTES:

1. Ratings are based on AMCA Standard 500 using Test Setup Apparatus Figure 5.3 (damper is installed with duct upstream and downstream).
2. Static Pressure and Conversion Velocities are corrected to .075 lb./cu. ft. air density.

CD/OD 102 PRESSURE DROP CHART

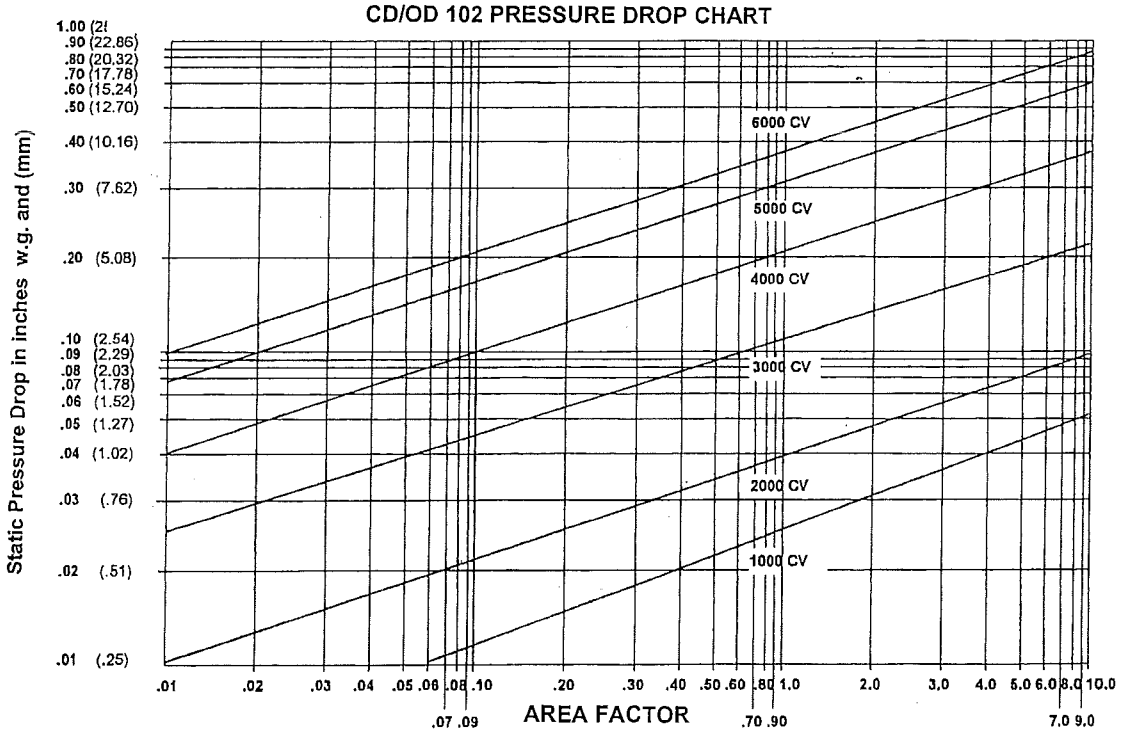

CD/OD102 PERFORMANCE DATA

PRESSURE LIMITATIONS

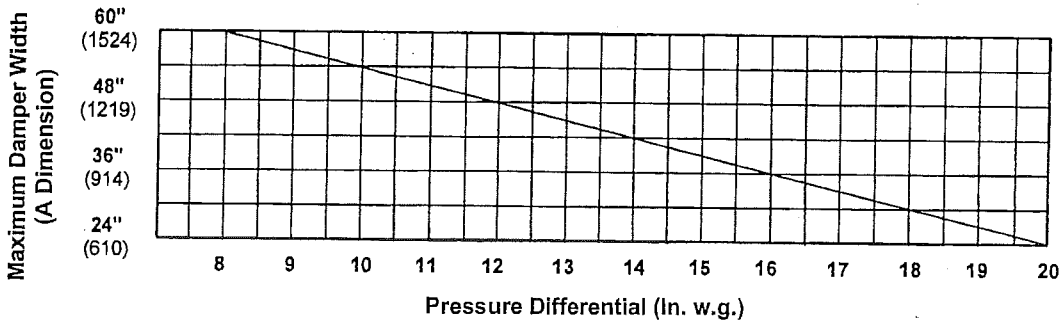

The OD102 damper can be mounted in any position for fan discharge. Ideal for medium to heavy duty commercial or industrial appl ications, the OD102 can be used to control or modulate the volume of air delivered by the fan, to shut off fan air flow and to balance the system.

The graph shows the maximum allowable pressure differentials across a closed CD/OD102 damper. Dampers with a 60" (1524) width (A dimension) can withstand 8 in. w.g. Dampers with smaller widths (A dimension) can withstand higher pressures. For example, a 48" (12 19) A dimension damper can withstand a maximum of 12 in. w.g. and a 36" (914) A dimension damper can withstand a maximum of 16" w.g.

Note that CD/OD102 dampers are not recommended for use in abrasive or high temperature atmospheres due to the aluminum blade co nstruction. Consult your Ruskin representative for a listing of Ruskin models suited to abrasive environments.

TOTAL CFM LEAKAGE AT ONE INCH WATER GAGE STATIC PRESSURE DIFFERENTIAL (For Damper Equipped with Optional Seals)

DAMPER WIDTH	DAMPER HEIGHT														
	12" (305)	18" (457)	24" (610)	30" (762)	36" (914)	42" (1067)	48" (1219)	54" (1372)	60" (1524)	66" (1676)	72" (1829)	78" (1981)	84" (2134)	90" (2286)	96" (2438)
12" (305)	15	23	30	38	45	53	60	68	75	83	90	98	105	113	120
24" (610)	20	30	40	50	60	70	80	90	100	110	120	130	140	150	160
36" (914)	24	36	48	60	72	84	96	108	120	132	144	156	168	180	192
48" (1219)	32	48	64	80	96	112	128	144	160	176	192	208	224	240	256
60" (1524)	40	60	80	100	120	140	160	180	200	220	240	260	280	300	320

LEAKAGE CORRECTION FACTOR

Static Pressure (in.w.g.)	1	2	3	4	5	6	7	8	9	10	11	12	13	14	15	16	17	18	19	20
Correction Factor	1.0	1.4	1.7	2.0	2.2	2.4	2.6	2.8	3.0	3.2	3.3	3.5	3.6	3.7	3.9	4.0	4.1	4.2	4.4	4.5

DETERMINING LEAKAGE

To determine leakage at static pressure differentials higher than one inch water gage, multiply leakage at one inch (determined from table) by correction factor for higher static pressure (determined from the Leakage Correction Factor Table).

Example:
Find leakage for a 36" wide x 24" high damper at 3 inches water gage: 48 CFM x 1.7 = 81.6 CFM leakage at 3 inches water gage.

Leakage ratings are based on AMCA Standard 500 using Test Setup Apparatus Figure 5.5. Torque applied holding damper closed at 10 in. lbs. per sq. ft. of damper with minimum of 20 in. lbs.

INSTALLATION

For proper operation, damper must be installed square and free from racking. Opposed blade dampers must be operated from a power blade or drive axle.

NOTE:

Dampers are designed for operation with blades running horizontally. Dampers to be installed with vertical blades require thrust collars be added at time of damper manufacture and at additional cost. Some standard features are not available with vertical bladed dampers.

CD102 SUGGESTED SPECIFICATION

Furnish and install, at locations shown in plans or in accordance with schedules, industrial grade control dampers meeting the following construction standards: Frames shall be minimum 8" deep x 2" flanged 12 gage steel channel (203 x 51 x 2.8). The blades shall be maximum 7 3/4" (197) wide, minimum .080" (2) thick, 6063T5 extruded aluminum airfoil shaped with integral structural reinforcing tube running full length of each blade. Axles shall be minimum 3/4" (19) diameter with machined edge to provide positive locking connection to blades and linkage. Full round axles are not acceptable. Bearings shall be stainless steel sleeve pressed into frame. Linkage shall be located in jamb out of airstream and constructed of 10 gage (3.5) galvanized steel clevis type arms, 3/16" x 3/4" (4.7 x 19) plated steel tie bars and 3/8" (9.5) diameter stainless steel pivot pins with lock type retainers.

Submittal must include leakage, pressure drop and maximum pressure data based on AMCA Publication 500 testing. Damper shall be Ruskin model CD102 Control Damper.

ADD TO SPECIFICATION IF REQUIRED:
Dampers shall be equipped with blade and jamb seals for low leakage application. Blade seals shall be extruded silicone rubber mechanically locked into extruded blade slots. Adhesive type seals are not acceptable. Jamb seals shall be flexible stainless steel located between blade edge and jamb for maximum sealing compression. Wind stop type seals are not acceptable.

OD102 SUGGESTED SPECIFICATION

Furnish and install, at locations shown in plans or in accordance with schedules, fan outlet dampers meeting the following construction standards: Frames shall be minimum 8" deep x 2" flanged 12 gage steel channel (203 x 51 x 2.8). The blades shall be maximum 7 3/4" (197) wide, minimum .080" (2) thick, 6063T5 extruded aluminum airfoil shaped with integral structural reinforcing tube running full length of each blade. Axles shall be minimum 3/4" (19) diameter with machined edge to provide positive locking connection to blades and linkage. Full round axles are not acceptable. Bearings shall be stainless steel sleeve bolted to frame. Bearings pressed nto frame are not acceptable. Linkage shall be located in jamb out of airstream and constructed of 10 gage (3.5) galvanized steel clevis type arms, 3/16" x 3/4" (4.7 x 19) plated steel tie bars and 3/8" (9.5) diameter stainless steel pivot pins with lock type retainers.

Submittal must include leakage, pressure drop and maximum pressure data based on AMCA Publication 500 testing. Damper shall be capable of being mounted in any position for fan discharge and shall be capable of controlling or modulating the volume of air delivered by the fan, to shut off fan air flow and balance the system. Damper shall be Ruskin model OD102 Control Damper.

ADD TO SPECIFICATION IF REQUIRED:
Dampers shall be equipped with blade and jamb seals for low leakage application. Blade seals shall be extruded silicone rubber mechanically locked into extruded blade slots. Adhesive type seals are not acceptable. Jamb seals shall be flexible stainless steel located between blade edge and jamb for maximum sealing compression. Wind stop type seals are not acceptable.

RUSKIN®
3900 Dr. Greaves Rd.
Kansas City, MO 64030
(816) 761-7476
FAX (816) 765-8955
www.ruskin.com

RUSKIN®

3900 Dr. Greaves Rd. • Kansas City, MO 64030 • (816) 761-7476 • FAX (816) 765-8955

COMMERCIAL CONTROL DAMPER OPERATION & MAINTENANCE

MODELS: COMMERCIAL CONTROL DAMPERS

Regular maintenance is essential to ensure that a building's air control system will perform as intended under normal conditions. Regular maintenance should include periodic testing of all equipment associated with the air control system such as initiating devices, fans, dampers, controls, etc. Ruskin recommends each damper be cycled and tested every 6 months and in accordance with actuator manufacture recommendations (if damper has actuator) and local codes.

MAINTENANCE

- Clean damper blades and other working parts if necessary.
- Lubricate linkage, bearings and other moveable parts with a silicone lubricant. **Do not use petroleum-based products as they could cause excessive dust collection.**
- Operate (open and close) the damper via the actuator or extended shaft.
- Check the blades to make sure they completely close and re-open.
- Consult Ruskin if problems are encountered.

CLOSURE CONCERNS

- Remove any foreign material from the blade operating path.
- Verify that hardware used to install damper does not contact moving parts of the damper.

OPERATION

• Operate damper through full cycle, verify that all blades open and close completely. Check for loose linkage from actuator (if used) through jackshafting (if multi-section) and damper side linkage. Tighten linkage where required or Call Ruskin.

ALL STATED SPECIFICATIONS ARE SUBJECT TO CHANGE WITHOUT NOTICE OR OBLIGATION. ©Ruskin Sound Control 2006

7
Calculations - Pressure Drop

Buffalo Air Handling, Pressure Drop Program
Results Page

Version 3.04

Program User Name:	Dave L
Date:	12/09/2010
Order Number:	100111-01
Mark:	AHU-11
Customer Name:	J Moore & Co. Livingston, NJ Newark Airport
Engineer:	RG Vanderweil / NY-NJ Port Authority
Design AirFlow (CFM):	87000
Fan Quantity:	3
Additional Information:	Rev A

Upstream External Losses (in. W.G.):	0.50
Downstream External Losses (in. W.G.):	4.00

**NOTE: A pressure drop value followed by "*" indicates a user defined value.*

UpStream Components

Face Velocity	Pressure Drop	Component
1160	0.01	Inlet - Wall or Ceiling
418	0.80*	Filter - 2" Pleated, Cleanliness = Dirty
418	1.50*	Filter - 4" Pleated, Cleanliness = Dirty
418	0.40*	Special Component, Carbon Filter
498	0.70*	Cooling Coil - Plate, 8 Rows

Section Total	3.41	

Fan Components

Face Velocity	Pressure Drop	Component
	0.22	Inlet damper reduction
	0.02	Outlet screen reduction
	0.13	Last component reduction
	0.04	Fan Extra Pressure

4105	0.41	Fan - Supply, Plenum, Arrangement 4, 36.50 Wheel dia.

DownStream Components

Face Velocity	Pressure Drop	Component
1188	0.48*	Heating Coil - Standard, Plate Fin, 2 Rows

Section Total	0.48	

Summary

Fan Static Pressure = 8.80

Total Internal Losses (in. W.G.):	4.30
Total External Losses (in. W.G.):	4.50

Total:	8.80

(Extra Static Pressure = 0.04, Fan Section)

Disclaimer: This program is based on performance estimates provided by original equipment manufacturers. It should be applied with reasonable engineering assumptions and the results verified.

8
Electrical

ES-7102

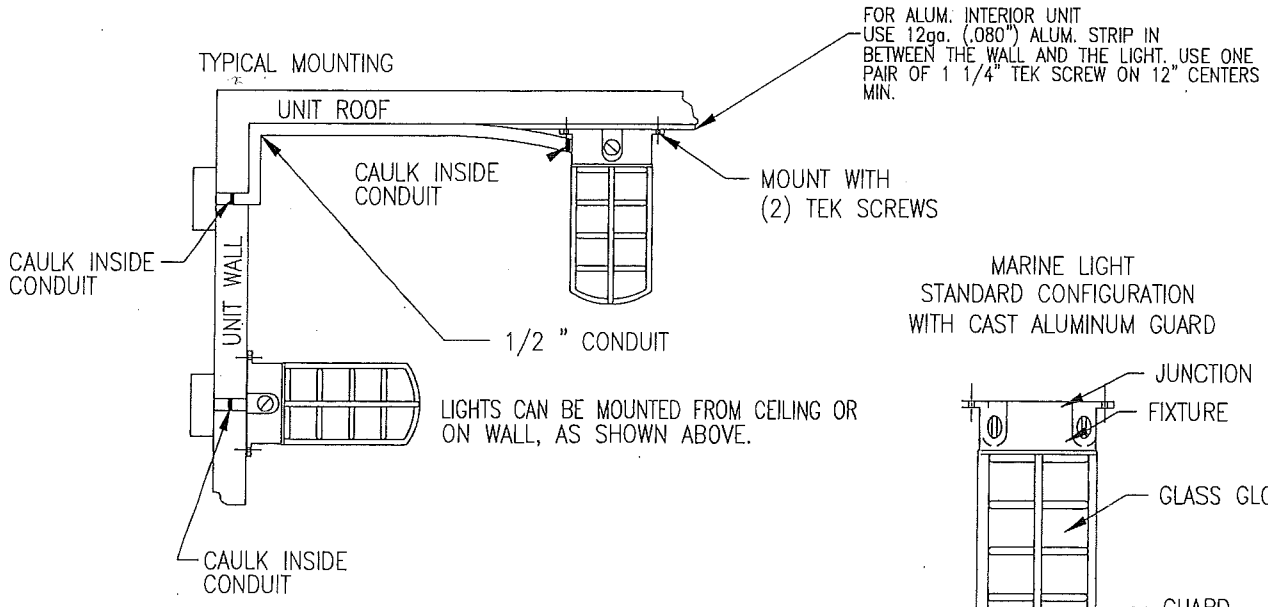

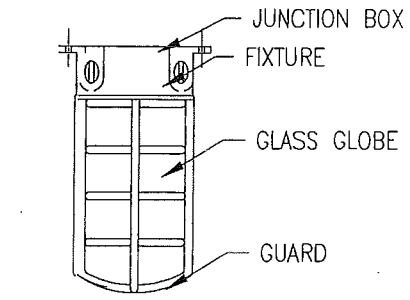

FEATURES:

CAST ALUMINUM CONSTRUCTION.
FULLY THREADED GLASS GLOBE
THREADED CAST ALUMINUM GUARD

SPECIFICATIONS:

VAPORPROOF INCANDESCENT

200 WATT MAXIMUM INCANDESCENT LAMP (NOT INCLUDED)
120 VOLTS, 60 Hz, 1.66 AMPERE

300 WATT MAXIMUM INCANDESCENT LAMP (NOT INCLUDED)
120 VOLTS, 60 Hz, 2.5 AMPERE

CLASSIFICATIONS:

UL LISTED FOR WET LOCATIONS UL STANDARD 1571
FOR HAZARDOUS LOCATIONS, CONSULT FACTORY

WIRING PER NATIONAL ELECTRICAL CODE

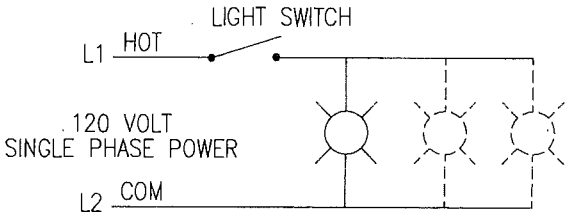

WIRE LIGHTS IN PARALLEL
MAXIMUM OF 9 PER SWITCH (BASED ON 200 WATT BULB)
MAXIMUM OF 6 PER SWITCH (BASED ON 300 WATT BULB)

REV.	DESCRIPTION	DATE
A	1. REMOVED REFERE[illegible] SPECIFIC MANUFAC[illegible]CRS.	7/01
B	1. REMOVED HAZARDOUS LOCATION CLASSIFICATIONS.	09/09/03
C	1. ADDED INFORMATION ON 300 WATT BULBS. 2. ADDED NOTE FOR ALUM STRIP.	11/24/08
D	1. ADDED NOTES ABOUT CAULKING INSIDE CONDUIT. 2. CHANGED LINES #3 & 5 UNDER SPECIFICATIONS SECTION.	6/10/09
E	1. CHANGED TITLE BLOCK LOGO.	11/22/10

This drawing is the property of Buffalo Air Handling and is returnable upon request. It is for the confidential use of the buyer of the equipment and must not be reproduced, or shown to any third party, without prior written authorization of Buffalo Air Handling.

REFERENCE: –

TITLE: MARINE LIGHT

DRAWING STATUS	DESIGNER:	APPROVED BY:
–	MPV	–
	DATE: 10/20/96	PAGE: 1 of 1

BUFFALO AIR HANDLING

DRAWING NO. (REF. JO#): ES-7102

REV.: E

VAPORPROOF CEILING FIXTURES

Durable, versatile and economical.
RAB vaporproof incandescent or fluorescent lighting for non-hazardous locations

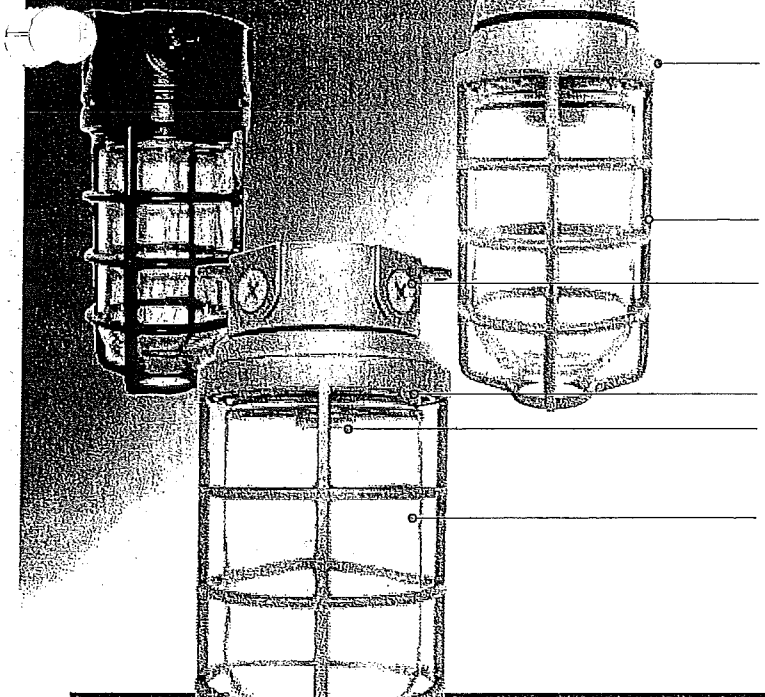

Die cast aluminum for superior durability

Set screw keeps guard securely in place

All stainless steel hardware

Close-up plugs allow Phillips or slotted screwdrivers for easy installation

One piece die cast aluminum guards threaded for secure fit

Junction box with sturdy mounting lugs

UL Listed for use with 90°C supply wiring OK for use in dwellings and wet locations

High temperature silicone internal gaskets

Adapter plate included with VC fixtures

Premium porcelain socket with 150°C 8" long leads

Clear heat resistant glass globes standard Polycarbonate Permaglobes available

Packed partially assembled for fast installation

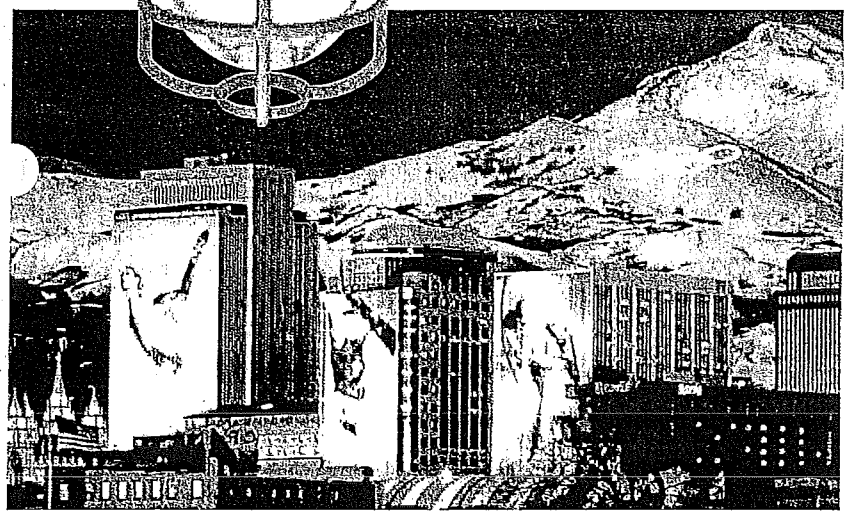

1,850 RAB Vaporproof Lights formed the Olympic Rings in the mountains above Salt Lake City

Product Information

Natural Fixture with:

- clear glass & die cast guard
- clear glass & wire clamp guard
- clear glass globe (no guard)
- clear Permaglobe (no guard)
- white Permaglobe (no guard)
- Fixture less globe

CFL
13 watt Fluorescent, 120 Volt
Lamp supplied

New! CFL
22 watt Fluorescent, 120 Volt
Lamp supplied

23 watt Self ballasted Fluorescent
Lamp supplied

3/4" tapped hubs

Finish- Add suffix:
- S Silver Gray
- W White
- B Black

Specifications

UL Listing:
Suitable for wet locations.
Suitable for use in dwellings.
Suitable for use with 90°C supply wiring.
Complies with UL Standard 1598. For non-hazardous locations where the lamp, socket and wiring require protection from rain, corrosive fumes, non-combustible dusts, moisture, non-explosive vapors and gases. For lamp base up installation only when outdoors.

Wattage:
See catalog number chart for maximum wattage with clear glass, colored glass and Permaglobes.

Size:
or 3/4" NPS. Metric size hub taps available. Consult factory.

Globes:
Clear thermal shock resistant soda lime glass standard. Colored and white glass globes available. Unbreakable RAB Permaglobes available in clear and in color. See page 162.

Reflectors:
Customize fixture with a highly reflective white baked polyester epoxy powder finish over a heavy gauge aluminum base. Reflectors thread onto fixtures. See page 164.

Finish:
Natural unpainted finish standard. Painted finishes of Silver Gray (add suffix S), White (add W) and Black (add B). Other finish colors available. Consult factory.

Construction:
Die cast aluminum with brass screws

Guard:
One piece die cast aluminum with set screw

Socket:
Incandescent: Premium porcelain with 150°C 8" leads attached. Fastened with 2 brass screws.

CFL Lamp Base:
13w: G23-2 Base • 22w: GX32d-2 Base
23w: Self Ballasted, Medium Base Spiral FL

CFL Ballast:
NPF 120V

Wire Guard:
8 gauge steel wire with silver powder coat

Patents:
The configuration and design of RAB Vaporproof fixtures are a U.S. registered trademark and protected under U.S. and international intellectual property laws.

www.rabweb.com
Wiring Diagrams
Installation Instructions
Product Specifications

Special Globes

Colored globes (White, Red, Blue, Green or Amber) in cylindrical or ball shapes are available in glass or polycarbonate. Order a vaporproof fixture less globe and combine it with a Globe from page 162.

Glass

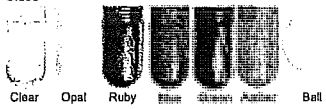

Clear Opal Ruby Blue Green Amber Ball

Unbreakable Polycarbonate

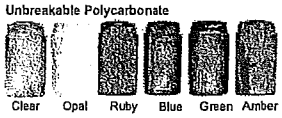

Clear Opal Ruby Blue Green Amber

RAB® TEL 888 RAB 1000
FAX 888 RAB 1232
www.rabweb.com

VX 4" Box

Box mount, die cast aluminum with built-in junction box and sturdy mounting lugs. Medium base socket, 1/2" or 3/4" NPS hub size and a variety of globes. Incandescent lamp A21 for 100 Series, PS25 for 200 Series. Lamp not supplied.
CFL: 13, 22, 23 watt lamp supplied.

Finish:
- ○ Natural
- ◎ Silver Gray
- ○ White
- ● Black

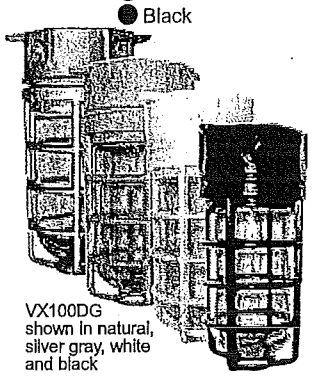

VX100DG shown in natural, silver gray, white and black

VP Pendant

Pendant mount, die cast aluminum construction. Medium base socket, 1/2" or 3/4" NPS pendant thread and a variety of globes. Incandescent lamp A21 for 100 Series, PS25 for 200 Series. Lamp not supplied.
CFL: 13, 22, 23 watt lamp supplied.

Finish:
- ○ Natural
- ◎ Silver Gray
- ○ White
- ● Black

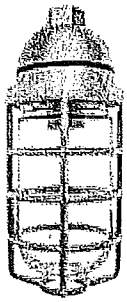

VP100DG shown in natural

VC Ceiling

Die cast aluminum construction. Mounts to existing surface or recessed 4" boxes. Adapter plate provided. Medium base socket and a variety of globes. Incandescent lamp A21 for 100 Series, PS25 for 200 Series. Lamp not supplied.
CFL: 13, 22, 23 watt lamp supplied.

Finish:
- ○ Natural
- ◎ Silver Gray
- ○ White
- ● Black

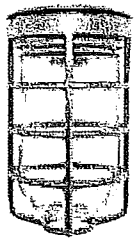

VC100DG shown in natural

VLX 3" Box

Die cast aluminum with built-in 3" junction box and sturdy mounting lugs. Medium base socket, 1/2" or 3/4" NPS hub size and a variety of globes. Incandescent lamp A21 for 100 Series, PS25 for 200 Series. Lamp not supplied.
CFL: 13, 22, 23 watt lamp supplied.

Finish:
- ○ Natural
- ◎ Silver Gray
- ○ White
- ● Black

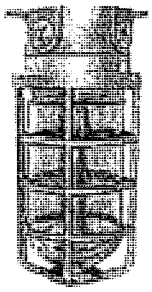

VLX100DG shown in natural

Catalog Numbers

100 Series Max Watts	200 Series Max Watts
150w Clear Glass	300w Clear Glass
100w Colored Glass	200w Colored Glass
75w Permaglobe	100w Permaglobe
VX100DG	VX200DG
VX100G	VX200G
VX100	VX200
VX100P	VX200P
VX100PW	VX200PW
VX1	VX2
add /F13	
	add /F22
add /FS23	
add /-3/4	add /-3/4
add S	add S
add W	add W
add B	add B

For Natural & 1/2" taps, no suffix needed.

100 Series Max Watts	200 Series Max Watts
150w Clear Glass	200w Clear Glass
100w Colored Glass	150w Colored Glass
75w Permaglobe	100w Permaglobe
VP100DG	VP200DG
VP100G	VP200G
VP100	VP200
VP100P	VP200P
VP100PW	VP200PW
VP1	VP2
add /F13	
	add /F22
add /FS23	
add /-3/4	add /-3/4
add S	add S
add W	add W
add B	add B

For Natural & 1/2" taps, no suffix needed.

100 Series Max Watts	200 Series Max Watts
100w Clear Glass	150w Clear Glass
100w Colored Glass	100w Colored Glass
75w Permaglobe	100w Permaglobe
VC100DG	VC200DG
VC100G	VC200G
VC100	VC200
VC100P	VC200P
VC100PW	VC200PW
VC1	VC2
add /F13	
	add /F22
add /FS23	
add /-3/4	add /-3/4
add S	add S
add W	add W
add B	add B

For Natural, no suffix needed.

100 Series Max Watts	200 Series Max Watts
150w Clear Glass	200w Clear Glass
100w Colored Glass	150w Colored Glass
75w Permaglobe	100w Permaglobe
VLX100DG	VLX200DG
VLX100G	VLX200G
VLX100	VLX200
VLX100P	VLX200P
VLX100PW	VLX200PW
VLX1	VLX2
add /F13	
	add /F22
add /FS23	
add /-3/4	add /-3/4
add S	add S
add W	add W
add B	add B

For Natural, no suffix needed.

Dimensions

VX100DG & VX200DG

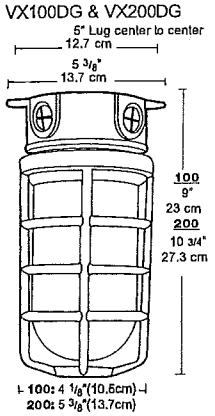

VP100DG & VP200DG

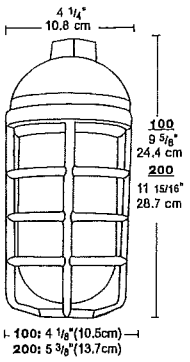

VC100DG & VC200DG

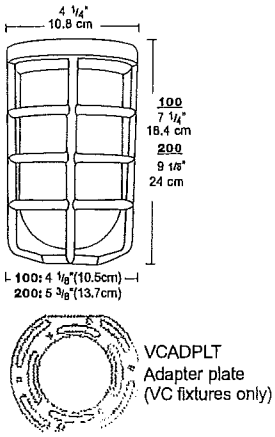

VCADPLT
Adapter plate
(VC fixtures only)

VLX100DG & VLX200DG

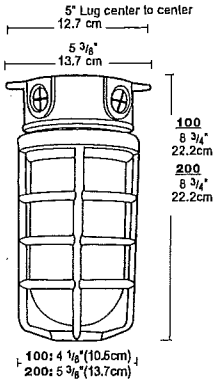

TEL 888 RAB 1000
FAX 888 RAB 1232
www.rabweb.com

ES-7104

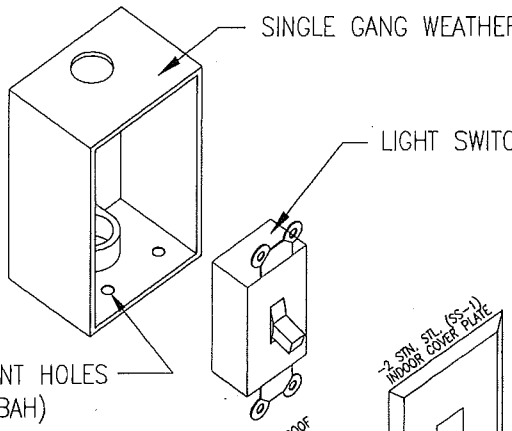

ES ITEM NO.	SWITCH RATING AMP.
-1	20 A

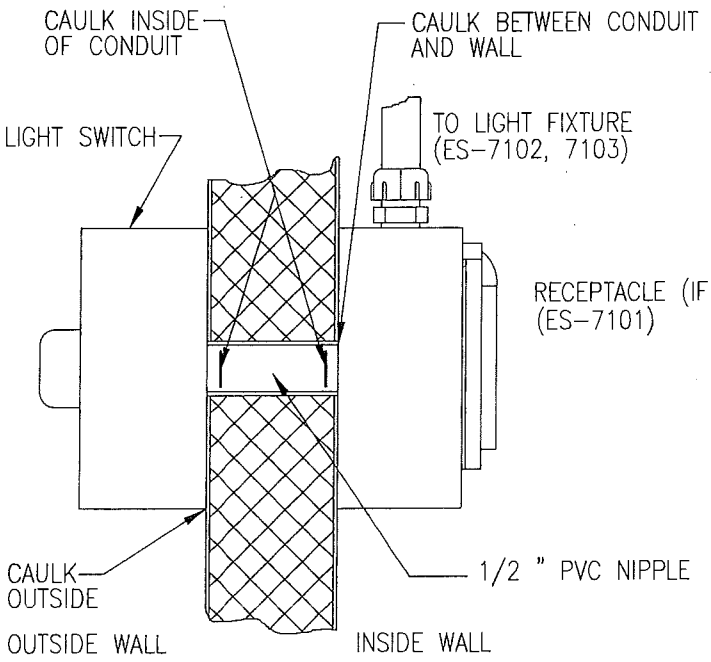

SPECIFICATIONS:
HEAVY DUTY SPECIFICATION GRADE
120-277VAC, 20A (STANDARD)
LIGHTED RED IN ON POSITION

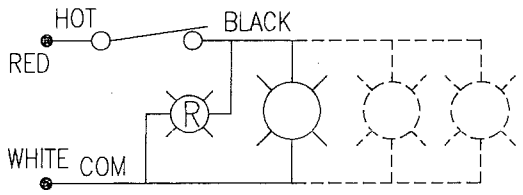

SINGLE POLE SWITCH
WIRED TO BREAK 1 LEG

MOUNTING:
MOUNT LIGHT SWITCH ON OUTSIDE WALL NEXT TO ACCESS DOOR, OPPOSITE HINGE SIDE (UNLESS OTHERWISE SPECIFIED).

WIRING TO BE #12 MINIMUM FOR 20 A SWITCH

WIRING PER NATIONAL ELECTRICAL CODE

REV.		
REV. A	2/01	1. CHANGES UNKNO.
REV. B	11/21/08	1. DELETED 15 AMP SWITCH
REV. C	6/10/09	1. ADDED VENT HOLE TO LIGHT SWITCH BOX.
REV. D	1/22/10	1. CHANGED TITLE BLOCK LOGO.

This drawing is the property of Buffalo Air Handling and is returnable upon request. It is for the confidentiol use of the buyer of the equipment and must not be reproduced, or shown to any third party, without prior written authorization of Buffalo Air Handling.

REFERENCE: -

TITLE: LIGHT SWITCH

DRAWING STATUS	DESIGNER:	APPROVED BY:
-	G.K.	-
	DATE: 08/02/01	PAGE: 1 of 1

BUFFALO AIR HANDLING

DRAWING NO. (REF. JO#): ES-7104

REV.: D

FF Commercial Series Auto-Off Timers

These energy saving commercial timers use no electricity to operate. These timers are designed to replace any standard wall switch, single or multi-gang, and automatically limit the "ON" time of fans, lights, motors, heaters and other energy consuming loads. Time limits of 5, 15, 30 and 60 minutes and 2, 4, 6 and 12 hours are available. The "hold feature" allows the user to override the automatic shut-off function for extended use of the load as required. Rugged time-dial plate takes the abuse encountered in commercial environments. Time saving "up front" terminal connection with teeter type terminals and an easy "press-on" knob design ensure quick and easy installation.

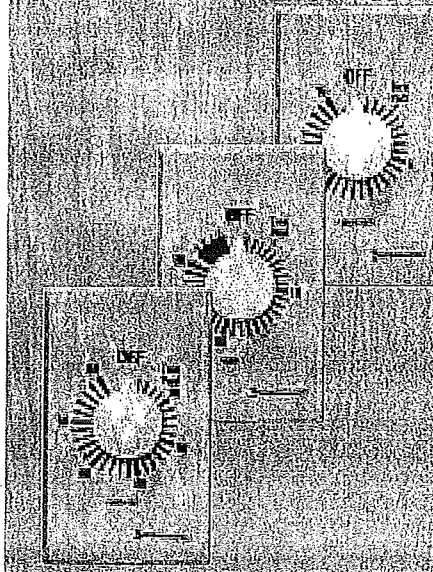

Specifications

Switch Rating –

Inductive: 20 Amp 125 VAC 50/60 Hz; 10 Amp 250 VAC 50/60 Hz; 10 Amp 277 VAC 50/60 Hz,
Tungsten: 7 Amp 125 VAC,
Motor: 1 HP 125 VAC 50/60 Hz; 2 HP 250 VAC 50/60Hz

Caution: Do not use for sunlamps, sauna, etc...

Colors – Commercial "brush metal" look.

Style – New simulated metal finish meets NEC requirements.

UL916 E76987 | C22.2-177 LR3730 | 2.5 lbs 1.1 kg | -40°F (-40°C) to 155°F (68°C)

Engineering Specification

Spring Wound Auto Shut-Off Timer (a.k.a. Interval Timer).
Provide and install as indicated a mechanical spring wound timer that requires no electricity to operate the timing mechanism. The timer shall be supplied with a threaded shaft. The timer must be able to fit a standard 2-1/2 inch deep wall box with commercial wall plate or be capable of mounting easily in a panel board. Timer contacts shall break current at the end of timed cycle. Various timing ranges and switch contact arrangements shall be available up to 12 hours, with or without "HOLD" feature for constant ON. Timer shall be Intermatic Model FF_____ (Fill in for required time range and contact arrangement).

Time Cycle	Switch	Hold	Intermatic	Grasslin
5 Min	SPST	No	FF5M	KLT5M-A
5 Min	SPST	No	FF5MH	KLT5MH-A
15 Min	SPST	No	FF15MC	KLT15M-A
15 Min	SPST	Yes	FF15MH	KLT15MH-A
30 Min	SPST	No	FF30MC	KLT30M-A
30 Min	SPST	Yes	FF30MH	KLT30MH-A
60 Min	SPST	No	FF60MC	KLT60M-A
60 Min	SPST	Yes	FF60MHC	KLT60MH-A
2 Hr	SPST	No	FF2H	KLT2H-A
4 Hr	SPST	No	FF4H	KLT4H-A
6 Hr	SPST	No	FF6H	KLT6H-A
6 Hr	SPST	Yes	FF6HH	KLT6HH-A
12 Hr	SPST	No	FF12HC	KLT12H-A
12 Hr	SPST	Yes	FF12HHC	KLT12HH-A

Time Cycle	Switch	Hold	Intermatic	Grasslin
15 Min	SPDT	No	FF315M	KLT15MH-A
30 Min	SPDT	No	FF330M	KLT30MH-A
60 Min	SPDT	No	FF360M	KLT60MH-A
2 Hr	SPDT	No	FF32H	KLT2H-A
2 Hr	SPDT	Yes	FF32HH	—
4 Hr	SPDT	No	FF34H	KLT4H-A
4 Hr	SPDT	Yes	FF34HH	—
6 Hr	SPDT	No	FF36H	KLT6H-A
12 Hr	SPDT	No	FF312H	KLT12H-A
12 Hr	SPDT	Yes	FF312HH	KLT12HH-A
15 Min	DPST	No	FF415M	—
30 Min	DPST	No	FF430M	—
60 Min	DPST	No	FF460M	—
6 Hr	DPST	No	FF46H	—
12 Hr	DPST	No	FF412H	—

ES-7105

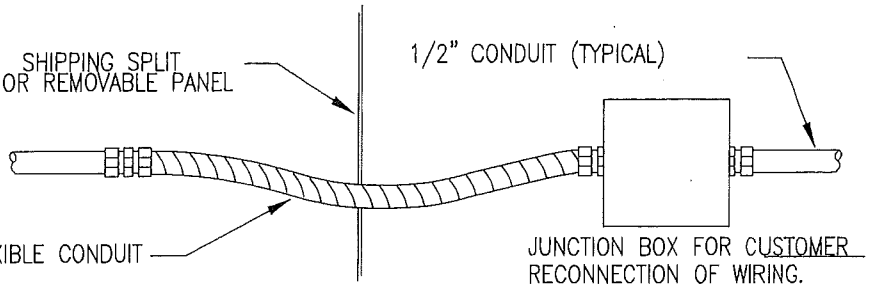

TYPICAL SHIPPING SPLIT
OR REMOVEABLE PANEL INSTALLATION

1. ALL WIRING MATERIALS AND DEVICES ARE U.L. APPROVED, AND WIRING METHODS CONFORM TO THE N.E.C.,(NATIONAL ELECTRICAL CODE), AND ANSI/NFPA-79 SPECIFICATIONS.
2. ALL WIRING WILL BE RUN IN E.M.T. THINWALL CONDUIT WITH COMPRESSION TYPE FITTINGS FOR INDOOR UNITS, EXCEPT WHEN LOCATED IN WET SECTIONS, ANY FLOORS WHERE TRAFFIC IS LIKELY OR WHEN OTHERWISE SPECIFIED.
   * WET SECTIONS INCLUDE COOLING COILS, HUMIDIFIER, HEAT RECOVERY COILS, AEROFILS, AIR WASHERS & WASH DOWN AREAS.
3. RIGID CONDUIT WILL BE USED ON THE EXTERIOR OF ALL OUTDOOR UNITS. EMT THIN WALL CONDUIT WITH COMPRESSION TYPE FITTINGS CAN BE RUN IN THE INTERIOR OF THE UNIT EXCEPT WHEN LOCATED IN THE WET SECTIONS, ON ANY FLOORS WHERE TRAFFIC IS LIKELY OR WHEN OTHERWISE SPECIFIED.
4. CONDUIT SHALL BE RUN ON THE EXTERIOR OF THE UNIT WHENEVER POSSIBLE IN ORDER TO TIE SWITCHES AND RECEPTACLES TOGETHER TO PROVIDE A SINGLE POINT CONNECTION FOR INCOMING POWER. SINGLE POINT CONNECTION WILL BE LABELED – WIRE HERE 120V.
5. FLEXIBLE CONDUIT WILL BE USED TO CROSS OVER SHIPPING SPLITS AND REMOVABLE PANELS, SUCH AS THOSE AT COIL SECTIONS. A JUNCTION BOX WILL BE LOCATED ON ONE SIDE OF THE SPLIT FOR CUSTOMER RECONNECTION OF WIRING.
6. ALL CONDUIT SHALL BE FASTENED DIRECTLY TO UNIT CASING USING PLASTIC STANDOFF CLAMPS TO PREVENT THE CONTACT OF DISSIMILAR METALS. PLASTIC STANDOFF CLAMPS SHOULD BE MATCHED TO THE TYPE & SIZE OF CONDUIT.
7. CONDUIT PENETRATIONS THROUGH THE UNIT CASING WILL BE SEALED ON THE OUTSIDE WITH A SEALING RING AND ON THE INSIDE WITH SILICONE CAULKING TO PREVENT AIR LEAKAGE AND BYPASS
8. WIRE WILL BE STRANDED COPPER, TYPE THWN, THHN, OR MTW. 12 GAUGE MINIMUM FO 460 VOLT MOTORS, 12 GAUGE MINIMUM FOR LIGHTS AND RECEPTACLES, 16 GAUGE MINIMUM FOR CONTROL WIRING.
9. WIRING FROM MOTOR CONDUIT BOXES TO WALLS, SINGLE POINT JUNCTION BOXES OR DISCONNECTS WILL BE IN CONDUIT WITH MAXIMUM 36" FLEXIBLE METAL CONDUIT.
10. DRILL (2) 3/16" VENT HOLES IN THE BOTTOM OF ALL LIGHT SWITCH AND RECEPTACLE BOXES.

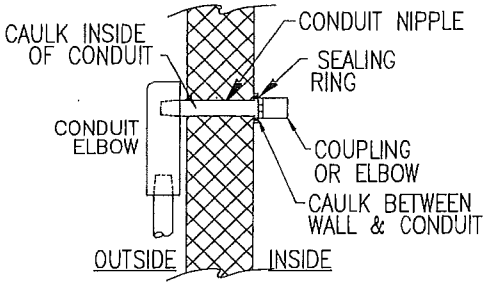

TYPICAL CONDUIT PENETRATION
THROUGH EXTERIOR WALL

REV.	DESCRIPTION	DATE
A	1. REMOVED NIPPLE & ACCOMODATE 2" CONSTRUCTION 1 TO WALL	2/01
B	1. CHANGED CONDUIT ON EXTERIOR OF OUTDOOR UNITS AND INTERIOR WET SECTIONS TO RIGID AND 36" MAXIMUM LENGTH TO FLEXIBLE CONDUIT AT MOTOR	09/09/03
C	1. MODIFIED NOTE # 2,5,7,8	11/24/08
D	1. ADDED NOTE #10. REWROTE NOTE #3 2. CHANGED NUMBERS OF ALL NOTES EXCEPT #1.	6/10/09
E	1. CHANGED TITLE BLOCK LOGO.	1/22/10

This drawing is the property of Buffalo Air Handling and is returnable upon request. It is for the confidential use of the buyer of the equipment and must not be reproduced, or shown to any third party, without prior written authorization of Buffalo Air Handling.

REFERENCE: –

TITLE: WIRING METHODS

DRAWING STATUS	DESIGNER:	APPROVED BY:
–	M.P.V.	–
	DATE: 5/31/95	PAGE: 1 of 1

BUFFALO AIR HANDLING

DRAWING NO. (REF. JO#): ES-7105

REV.: E

ES-7108

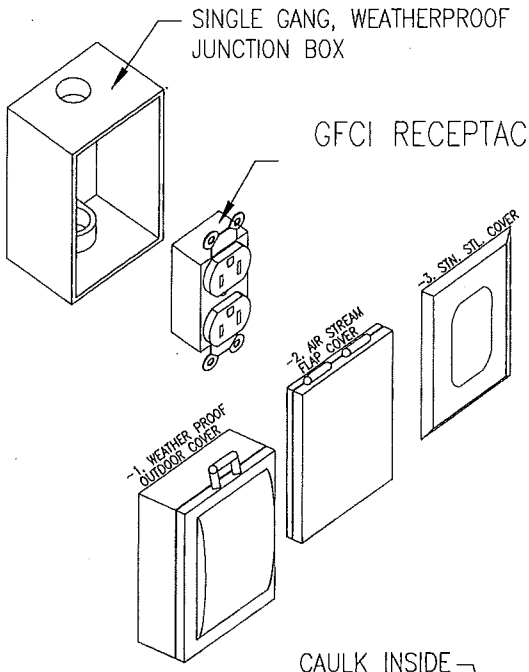

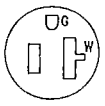

NEMA
5-20R

NEMA 5-20R (OPTIONAL)
125VOLT, 2-POLE, 3-WIRE, 20 AMPERE

ES ITEM NO.	OUTLET RATING AMP.	NEMA TYPE NO.
-1	20 A	5-20R

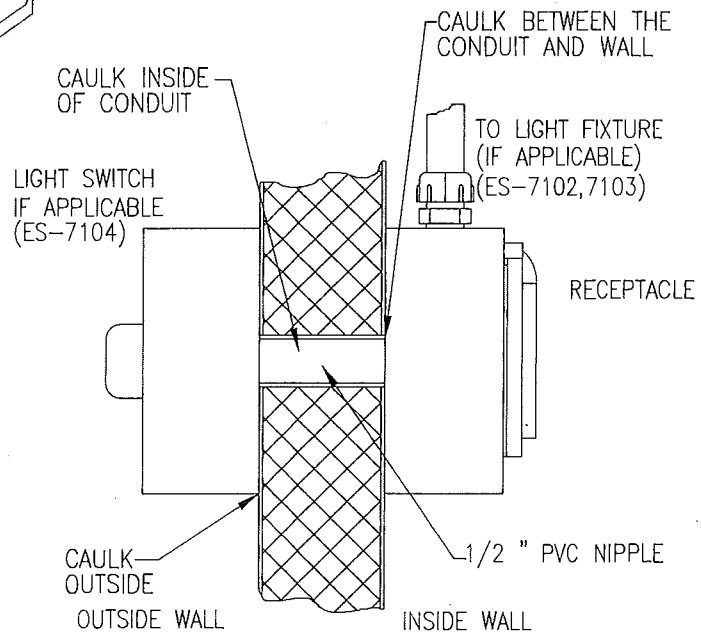

MOUNTING:
RECEPTACLE MOUNTED ON INSIDE WALL
UNLESS OTHERWISE SPECIFIED.

RECEPTACLE WIRED TO LIGHT SWITCH (IF APPLICABLE),
ELSE WIRED TO SINGLE POINT JUNCTION BOX
(IF APPLICABLE), OR NOT WIRED.

WIRING TO BE #12 MINIMUM FOR 20 A RECEPTACLE

RECEPTACLES SUITABLE FOR USE IN WET OR DRY LOCATIONS
INDOOR OR OUTDOOR

WIRING PER NATIONAL ELECTRICAL CODE

120V/1/60

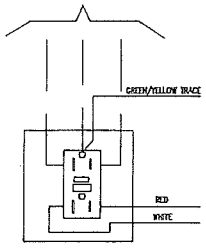

GFCI OUTLET
GFCI PROTECTED

REV.	DESCRIPTION	BY	DATE
A	1. CHANGES UNKNOWN.		/01
B	1. ADD TWO MORE SELECTIONS FOR FOR THE COVER OF THE GFCI 2. DELETED THE 15 AMP SELECTION 3. DELETED WIRING FOR THE DUPLEX RECEPTACLE	J.S.	11/25/08
C	1. CHANGED TITLE BLOCK LOGO.		1/22/10

This drawing is the property of Buffalo Air Handling and is returnable upon request. It is for the confidential use of the buyer of the equipment and must not be reproduced, or shown to any third party, without prior written authorization of Buffalo Air Handling.

REFERENCE:
—

TITLE GFCI RECEPTACLE

DRAWING STATUS	DESIGNER:	APPROVED BY:
—	G.K.	—
	DATE: 08/02/01	PAGE: 1 of 1

BUFFALO AIR HANDLING

DRAWING NO. (REF. JO#) ES-7108

REV. C

Innovative features **add safety, speed installation** and **ensure durability.**

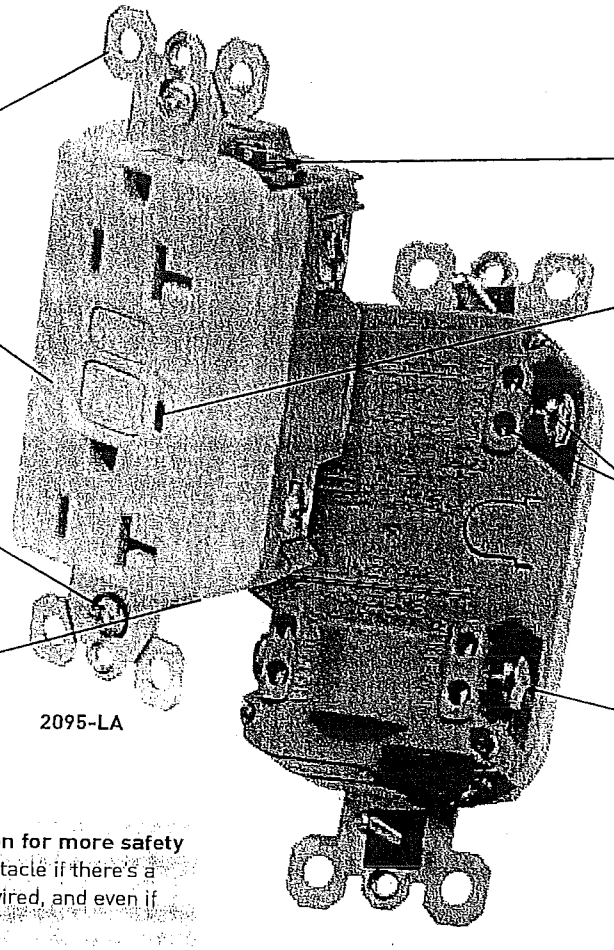

Nickel post-plated mounting strap for superior corrosion resistance.

High-impact-resistant, thermoplastic construction for superior strength and durability.

Captive screws for easier installation — won't get lost.

1/4" thinner than competitors' GFCIs to leave more room in the box.

2095-LA

Ground terminal back-wire clamp for fast installation.

Trip indicator light makes it easy to identify a tripped condition.

Two back-wire holes per termination add wiring flexibility, eliminate pigtailing and save box space.

Side or internal screw-pressure-plate back-wire termination speeds installation; takes #14-#10 AWG stranded or solid, copper or copper-clad conductors.

Patented SafeLock™ Protection for more safety — shuts off power to the receptacle if there's a ground fault, if the GFCI is miswired, and even if the GFCI fails.

The most durable GFCI available — exceeds UL943 voltage surge requirements; survives 100X the required UL 3kA/6kV voltage surge test cycles.

All P&S GFCI Duplex Receptacles meet Fed Spec requirements — FSUL Listed (Federal Specification WC596).

Meets 2006 UL® requirements.

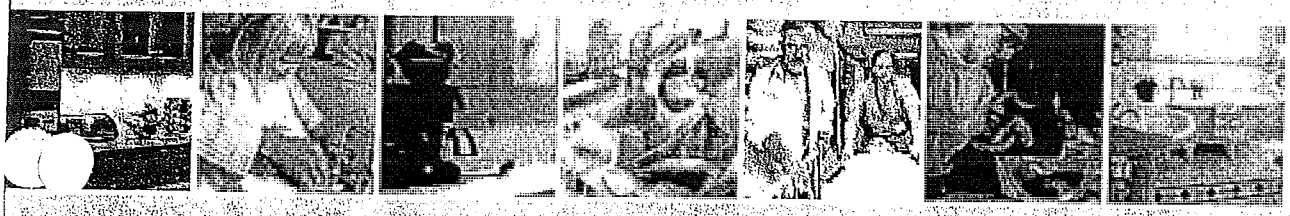

1595-W

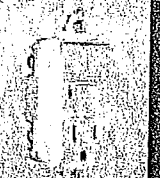

1595-2SWTWCC4

1595-NTLWCC4

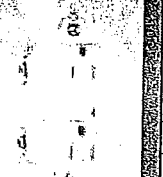

1595-TRWCC4

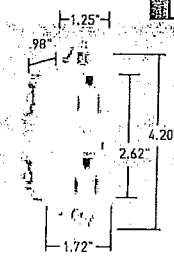

Catalog Number	Rating A.	VAC	Colors	Description	NEMA	3rd Party Compliance: UL943/C22.2 No. 144	UL498/C22.2 No. 42	FSUL/ WC596	UL20/C22.2 No. 111
GFCI Receptacles									
1595-*	15	125	Brown, I, LA, W, BK, GRY, RED	Spec Grade 15 Amp Duplex	5-15R	•	•	•	
2095-*	20	125	Brown, I, LA, W, BK, GRY, RED	Spec Grade 20 Amp Duplex	5-20R	•	•	•	
2085-*	20	125	I, LA, W, BK	Spec Grade 20 Amp Dead Front		•	(UL508/C22.2 No. 14)		
1595-HG*	15	125	Brown, I, LA, W, GRY, RED	Hospital Grade 15 Amp Duplex	5-15R	•	•	•	
2095-HG*	20	125	Brown, I, LA, W, GRY, RED	Hospital Grade 20 Amp Duplex	5-20R	•	•	•	
Auto-Ground GFCI Receptacles									
1595-S*	15	125	I, LA, W	Spec Grade 15 Amp Duplex	5-15R	•	•	•	
2095-S*	20	125	I, LA, W	Spec Grade 20 Amp Duplex	5-20R	•	•	•	
Decorator Switch/GFCI Combination Receptacles									
1595-SWT*CC4 Switch: GFCI:	 15 15	 120 125	I, LA, W, BK	Spec Grade 15 Amp Single-Pole Switch	5-15R	•	•		•
1595-2SWT*CC4 2 Switches: GFCI:	 15 15	 120 125	I, LA, W, BK	Spec Grade 15 Amp Two Single-Pole Switches	5-15R	•	•		•
Decorator LED Nightlight/GFCI Combination Receptacles									
1595-NTL*CC4	15	125	I, LA, W, BK	Spec Grade 15 Amp	5-15R	•	•	•	
2095-NTL*	20	125	I, LA, W, GRY, RED	Spec Grade 20 Amp	5-20R	•	•	•	
1595-HGNTL*	15	125	Brown, I, LA, W, GRY, RED	Hospital Grade 15 Amp	5-15R	•	•	•	
2095-HGNTL*	20	125	Brown, I, LA, W, GRY, RED	Hospital Grade 20 Amp	5-20R	•	•	•	
Tamper-Resistant GFCI Receptacles									
1595-TR*CC4	15	125	I, LA, W, BK	Spec Grade 15 Amp Duplex	5-15R	•	•	•	
1595-HGTR*	15	125	Brown, I, LA, W, GRY, RED	Hospital Grade 15 Amp Duplex	5-15R	•	•	•	
2095-TR*	20	125	Brown, I, LA, W, BK, GRY, RED	Spec Grade 20 Amp Duplex	5-20R	•	•	•	
2095-HGTR*	20	125	Brown, I, LA, W, GRY, RED	Hospital Grade 20 Amp Duplex	5-20R	•	•	•	
Illuminated GFCI Receptacles Light is on when power is available									
1595-*L	15	125	Brown, I, LA, W	Spec Grade 15 Amp Duplex	5-15R	•	•	•	
2095-*L	20	125	Brown, I, LA, W, GRY	Spec Grade 20 Amp Duplex	5-20R	•	•	•	
1595-HG*L	15	125	Brown, I, LA, W, GRY, RED	Hospital Grade 15 Amp Duplex	5-15R	•	•	•	
2095-HG*L	20	125	Brown, I, LA, W, GRY, RED	Hospital Grade 20 Amp Duplex	5-20R	•	•	•	

*** Color Designation**

—	Brown	BK	Black
I	Ivory	GRY	Gray
LA	Light Almond	RED	Red
W	White		

For additional technical or application-specific information, call 800-223-4185 or visit our website at www.passandseymour.com. We're eager to put our expertise to work for you.

Distributed by:

USA
P.O. Box 4822
Syracuse, NY 13221-4822
800-611-7277

Canada
570 Applewood Crescent
Vaughan, ON, L4K 4B4
905-738-9195

Pass & Seymour

legrand®

www.passandseymour.com/gfci

BR1241 2/06
©2006, Pass & Seymour/Legrand EMA/DG

ES-7204A

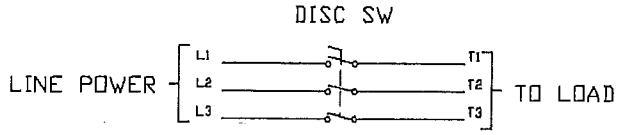

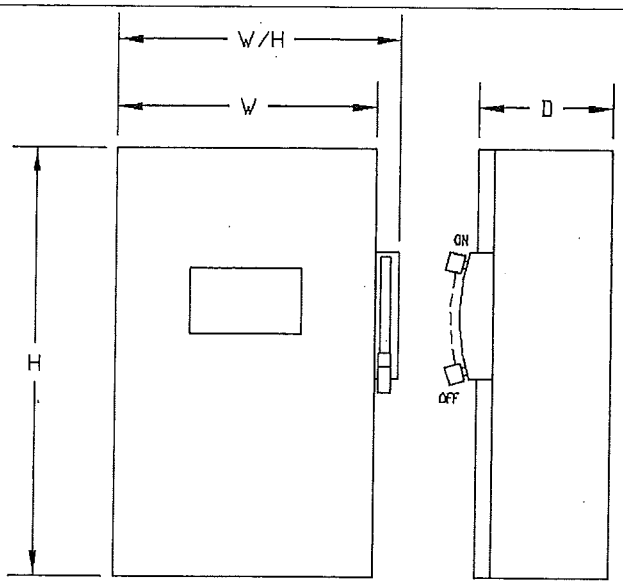

ES ITEM NO.	SWITCH RATING AMP.	MAX. H.P.		H	W	D	W/H	APPROX WT. LBS.
		230V	460V					
-1	30	10	20	14.8	6.80	5.00	7.70	17.0
-2	60	20	50	16.7	8.20	6.20	9.00	23.0
-3	100	40	75	20.7	10.4	6.50	11.5	38.0
-4	200	60	125	27.6	13.2	8.00	14.3	54.0
-5	400	125	250	46.3	26.3	10.2	27.7	175.0

575-600V 60Hz - AVAILABLE, HOWEVER HP RATINGS MAY VARY (CONSULT FACTORY)
200-208V 60Hz - AVAILABLE AT REDUCED HORSEPOWER RATINGS (CONSULT FACTORY).
SUITABLE FOR 50 Hz APPLICATIONS, HOWEVER HP RATINGS MAY VARY (CONSULT FACTORY)

MOUNTING:
MOUNTED INSIDE OR OUTSIDE OF UNIT NEXT TO THE COMPONENT BEING SWITCHED.

HEIGHT MUST NOT EXCEED 60" FROM TOP OF HANDLE IN HIGHEST POSITION TO SURFACE ON WHICH OPERATOR WILL STAND WHEN OPERATING DISCONNECT HANDLE. THIS SURFACE WILL BE THE FLOOR OF THE UNIT IF MOUNTED INTERNALLY, AND THE BOTTOM OF THE CHANNEL BASE IF MOUNTED EXTERNALLY, UNLESS OTHERWISE NOTED.

HEAVY DUTY, NON-FUSED DISCONNECT SWITCH
THREE-POLE 600VAC, 250VDC

AUXILIARY CONTACT KITS AVAILABLE
AUXILIARY CONTACTS OPEN BEFORE SWITCH BLADES.

NEMA 4/4X - OUTDOOR ENCLOSURE TO PROVIDE A DEGREE OF PROTECTION AGAINST CORROSION, WINDBLOWN DUST, RAIN AND HOSE DIRECTED WATER, UNDAMAGED BY FORMATION OF ICE ON ENCLOSURE.

THIS DRAWING IS THE PROPERTY OF BUFFALO AIR HANDLING, AND MUST NOT BE COPIED OR REPRODUCED WITHOUT PERMISSION.

Buffalo Air Handling

NAME: G.K.

APPROVED:

TITLE: NEMA 4/4X - OUTDOOR ENCLOSURE SAFETY SWITCH\DISCONNECT

DATE: 08/09/01

PAGE 1 OF 1

ES-7204A

Heavy Duty, Type TH

Spec-Setter Safety Switches
30-1200 Amperes
240, 480, 600 Volts AC
600 Volts DC

Two-pole, 600 Volts dc, No Fuse

Ampere Rating	Enclosure Type	HP, 240 Vac, NEC Std, 1-ph	HP, 240 Vac, NEC Std, 3-ph	HP, 480 Vac, Time Delay, 3-ph	HP, 600 Vac, Time Delay, 3-ph	HP, 125 Vdc	HP, 250 Vdc	HP, 600 Vdc
30A	NEMA Type 1	–	–	–	–	–	–	15
60A	NEMA Type 1	–	–	–	–	–	–	25
100A	NEMA Type 1	–	–	–	–	–	–	25
30A	NEMA Type 3R	–	–	–	–	–	–	15
60A	NEMA Type 3R	–	–	–	–	–	–	25
100A	NEMA Type 3R	–	–	–	–	–	–	25
30A	NEMA Type 4/4X	–	–	–	–	–	–	15
60A	NEMA Type 4/4X	–	–	–	–	–	–	25
100A	NEMA Type 4/4X	–	–	–	–	–	–	25
30A	NEMA Type 5, 12	–	–	–	–	–	–	15
60A	NEMA Type 5, 12	–	–	–	–	–	–	25
100A	NEMA Type 5, 12	–	–	–	–	–	–	25

Three-pole, 480 and 600 Volts ac - 250 Volts dc or Two-pole with Switching Neutral, No Fuse

Ampere Rating	Enclosure Type	HP, 240 Vac, NEC Std, 1-ph	HP, 240 Vac, NEC Std, 3-ph	HP, 480 Vac, Time Delay, 3-ph	HP, 600 Vac, Time Delay, 3-ph	HP, 125 Vdc	HP, 250 Vdc	HP, 600 Vdc
30A	NEMA Type 1	3	10	–	–	3	5	–
30A	NEMA Type 1	3	10	20	30	3	5	–
60A	NEMA Type 1	10	20	50	60	5	10	–
100A	NEMA Type 1	20	40	75	100	–	20	–
200A	NEMA Type 1	30	60	125	150	–	40	–
400A	NEMA Type 1	–	125	250	350	–	50	–
600A	NEMA Type 1	–	200	400	500	–	50	–
800A	NEMA Type 1	–	–	–	–	–	–	–
1200A	NEMA Type 1	–	–	–	–	–	–	–
30A	NEMA Type 3R	3	10	20	30	3	5	–
30A	NEMA Type 3R	3	10	20	30	3	5	–
60A	NEMA Type 3R	10	20	50	60	5	10	–
60A	NEMA Type 3R	10	20	50	60	5	10	–
100A	NEMA Type 3R	20	40	75	100	–	20	–
200A	NEMA Type 3R	30	60	125	150	–	40	–
400A	NEMA Type 3R	–	125	250	350	–	50	–
600A	NEMA Type 3R	–	200	400	500	–	50	–
30A	NEMA Type 4/4X	3	10	20	30	3	5	–
60A	NEMA Type 4/4X	10	20	50	60	5	10	–
100A	NEMA Type 4/4X	20	40	75	100	–	20	–
200A	NEMA Type 4/4X	30	60	125	150	–	40	–
400A	NEMA Type 4/4X	–	125	250	350	–	50	–
600A	NEMA Type 4/4X	–	200	400	500	–	50	–
30A	NEMA Type 5, 12	3	10	20	30	3	5	–
60A	NEMA Type 5, 12	10	20	50	60	5	10	–
100A	NEMA Type 5, 12	20	40	75	100	–	20	–
200A	NEMA Type 5, 12	30	60	125	150	–	40	–
400A	NEMA Type 5, 12	–	125	250	350	–	50	–
600A	NEMA Type 5, 12	–	200	400	500	–	50	–

For Type 1 Enclosure: 200-600 amp devices available factory reversed for bottom feed. Add "B" suffix to product number (e.g., TH33365B).
For Type 3R Enclosure: 30-200 amp devices have removable closing cap. Order hubs for these devices separately on page 2-30. Larger amp devices require field cut openings and customer-supplied hub.
Use molded case switch in circuit breaker enclosure.
[1]250 volts ac or 250 volts dc only. Compact enclosure.
[2]Class "L" fuses are only applicable when used with 800 and 1200A Type TC Safety Switches (e.g. TC72367).
[3]Not available with neutral.
[4]RF-version provides for vertically-hinged NEMA 3R door.

Accessories and Lug Sizes: See pages 2-25 to 2-30
Outlines, Dimensions and Knockouts: See pages 2-31 to 2-39

Prices and data subject to change without notice

9
Test Procedures

ES-8104

Factory Performance Test Procedure

Introduction

This report outlines the test procedure to be used in the performance evaluation of a production air-handling unit. The test will be performed at the factory of Buffalo Air Handling, Amherst, Virginia. The in accordance with AMCA Publication 203-90, Field Performance Measurements of Fan Systems. The test will form the basis for production qualification or acceptance by determining the unit air performance for comparison with acceptance criteria in accordance with the established Buffalo Air Handling policy. The tests may be witnessed at the discretion of the parties involved.

Scope

A completed air handling unit which has passed mechanical run tests will be set up for the performance test. This test will determine unit flow rate, total static pressure across the fan, available external static pressure to overcome system losses, fan speed, input power to the fan(s) and air density. The test results shall be compared to acceptance criteria. If corrective action is required the preliminary test results will be projected to the revised operating speed based upon Fan Laws.

Test Setup

AMCA 203-90 utilizes the concept of a pitot tube traverse of the velocity pressures in a short section of straight ductwork. A test duct shall be attached to either inlet or discharge opening(s) of the air handling unit. The duct will be sized to increase the air velocity to approximately 2,500 ft/min. The test duct shall not induce non-uniform airflow resulting in an additional system effects on the fan or other components.

The test setup will not include filters. Filter losses, component losses and external losses shall be simulated by reducing the cross sectional area of a component such as the heating coil, cooling coil or another component. Throttling shall minimize non-uniform airflow to the fan resulting in an additional system effect.

The test shall include two performance test points (test pressures). The test points shall be achieved by throttling the unit as stated above.

Test Measurements and Calculations:

The test data and the calculation of results shall be as contained in AMCA Publication 203-90 as applied to an air-handling unit. In general, the planes of pressure measurement are designated as follows:

Plane 1:	Plane of the fan inlet.
Plane 2:	Plane of the fan outlet.
Plane 3:	Plane of the pitot tube traverse for flow rate (for calculation of the air density during the test).

REV.		
A	1. REVISED ENTIRE	
B	1. CHANGED TITLE BLOCK LOGO.	1/22/10

This drawing is the property of Buffalo Air Handling and is returnable upon request. It is for the confidential use of the buyer of the equipment and must not be reproduced, or shown to any third party, without prior written authorization of Buffalo Air Handling.

REFERENCE:

TITLE: Factory Performance Test Procedure			
DRAWING STATUS: Complete	DESIGNER: D.M. /T.R.K.	APPROVED BY: TRK	
BUFFALO AIR HANDLING	DATE: 6/18/09	PAGE: 1 of 7	
	DRAWING NO. (REF. JO#): ES-8104	REV.: B	

In addition to flow rate and pressure, the fan speed and input power will be measured for each test point. Brake horsepower values may either be calculated using input electrical measurements to the motor in conjunction with established motor efficiency values or, in cases where the motor is powered through a Variable Speed Drive, a Load Control meter shall be used. The Load Control meter shall be located across the line upstream of the Variable Speed Drive so that it will not be effected by the distorted sine wave. An allowance for V-belt drive loss, when applicable, shall be taken from Appendix L of AMCA 203.

Fan System Effect

Buffalo Air Handling shall submit an Air Handling Unit Pressure Drop Calculation. This calculation shall include internal static pressure losses for each component, external static pressure requirement, fan system effects, and extra static pressure.

For a fan in a system to perform as rated in a catalog it is necessary for the system to be constructed in such a way that the airflow pathways into and out of the fan are similar to the conditions present during the tests performed to develop the fan manufacturer's ratings. This means that the fan's inlet and outlet are free from immediate obstruction. Due to accessory requirements or space limitations their effect upon fan performance must be taken into account during fan selection.

System effects may be encountered from the proximity of walls to the fan inlet, fan inlet screens, flow measuring devices, belt guards, V-belt drives, attenuators, dampers mounted directly on a fan inlet or outlet, etc. These fan losses have been calculated from component catalog data and system effect estimates taken from AMCA Bulletin 201, Fan and Systems. These un-measurable performance losses (appurtance losses) and system effects are listed in the Air Handling Unit Pressure Drop Calculation.

Establishing Performance Point of Rating

The performance test point of rating shall be the fan rating point minus the fan system effect and extra static pressure. Refer to the Air Handling Unit Pressure Drop Calculation for the fan system effect(s) and extra static pressure. The point of rating is the combination of the internal component static pressure losses and the external static pressure requirement.

AMCA Tolerance Box

An AMCA tolerance box shall be established about the point of rating. The boundaries of the box shall be +/- 5% of the performance point of rating pressure and +/- 3% of the design CFM.

Data Points

A minimum of two data points will be taken. Data points will be at approximately +5% and –5% of design flow. The data points will be plotted on the fan manufacturers fan curve. A line shall be drawn connecting the two data points and shall parallel the fan curve. This line represents the fan performance test curve.

Acceptance Criteria

The AMCA Tolerance Box shall be plotted on the manufacturer's performance curve. If the fan performance test curve passes through or above the AMCA tolerance box and motor horsepower, including drive losses, is below nameplate horsepower, airflow shall be deemed acceptable.

Results

Upon the completion of testing a report containing test data, fan curve, AMCA Tolerance Box calculation and performance curve shall be issued. A description of any performance modification made to the unit shall be included. The report shall be forwarded to all parties involved. A sample of this data is attached.

Attached are examples of the Air Handling Unit Pressure Drop Calculation, AMCA Tolerance Box Calculation Sheet, Fan Performance Test Data, and the fan manufacturer's performance curve with performance data and AMCA Tolerance Box plotted.

ES-8104

Sample: Air Handling Unit Pressure Drop Calculation

Buffalo Air Handling, Pressure Drop Program
Results Page

Version 1.04

Program User Name: SAMPLE
Date: 1/1/2010
Order Number:
Mark:
Customer Name:
Engineer:
Design AirFlow (CFM): 10500
Fan Quantity: 1
Additional Information:

Upstream External Losses (in. W.G.): 1.50
Downstream External Losses (in. W.G.): 1.50

NOTE: Asterisks drop value followed by "" indicates a non defined value

UpStream Components

Face Velocity	Pressure Drop	Component
727	0.02	Inlet - Wall or Ceiling, Damper
438	0.77*	Filter - 2" Pleated, Cleanliness = Dirty
438	1.15*	Filter - 12" Rigid, 95%, Cleanliness = Dirty
500	1.02*	Cooling Coil - Plate, 8 Rows
Section Total	2.96	

Fan Components

Face Velocity	Pressure Drop	Component
	0.09	Inlet screen reduction
	0.01	Outlet screen reduction
	0.25	Last component reduction
	0.20	Fan Extra Pressure
2642	0.54	Fan - Supply, Plenum, Arrangement 4, 27.00 Wheel (in)

Summary
Fan Static Pressure = 6.50

Total Internal Losses (in. W.G.): 3.50
Total External Losses (in. W.G.): 3.00

Total: 6.50

(Extra Static Pressure = 0.20 Fan Section)

Disclaimer: This program is based on performance [illegible] provided by various equipment manufacturers. It should be applied [illegible] and the results verified.

REV. A 1. REVISED ENTIRE L	This drawing is the property of Buffalo Air Handling and is returnable upon request. It is for the confidential use of the buyer of the equipment and must not be reproduced, or shown to any third party, without prior written authorization of Buffalo Air Handling.	TITLE Factory Performance Test Procedure	
REV. B 1/22/10 1. CHANGED TITLE BLOCK LOGO.		DRAWING STATUS Complete	DESIGNER: D.M. /T.R.K. / APPROVED BY: TRK
		BUFFALO AIR HANDLING	DATE: 6/18/09 / PAGE: 4 of 7
	REFERENCE:		DRAWING NO. (REF. JO#) ES-8104 / REV. B

ES-8104

Sample: AMCA Tolerance Box Calculation Sheet

BUFFALO
AIR HANDLING

AMCA Performance Tolerance Box Calculation

Fan Rating Static Pressure:	6.50
Fan Rating Airflow Capacity:	10500
Fan System Effect Losses:	0.34
Fan Extra Static Pressure:	0.20
Total Fan Losses:	0.54
Center of AMCA Tolerance Box:	10500 @ 5.96

CFM Tolerance of 3%:	315 CFM
AMCA Tolerance Box Higher CFM Limit:	10815
AMCA Tolerance Box Lower CFM Limit:	10185
SP Tolerance of 5%:	0.33 in. WG
AMCA Tolerance Box Upper SP Limit:	6.29
AMCA Tolerance Box Lower SP Limit:	5.64

BAH SO No: SAMPLE Mark: _____

Customer: _____

Date: _____

Name: _____

Witness: _____

REV.		
A	1. REVISED ENTIRE L	
B	1. CHANGED TITLE BLOCK LOGO.	1/22/10

This drawing is the property of Buffalo Air Handling and is returnable upon request. It is for the confidential use of the buyer of the equipment and must not be reproduced, or shown to any third party, without prior written authorization of Buffalo Air Handling.

REFERENCE:

BUFFALO AIR HANDLING

TITLE: Factory Performance Test Procedure			
DRAWING STATUS: Complete	DESIGNER: D.M. /T.R.K.	APPROVED BY: TRK	
	DATE: 6/18/09	PAGE: 5 of 7	
	DRAWING NO. (REF. JO#): ES-8104	REV.: B	

ES-8104

Sample: Fan Performance Test Data

BUFFALO AIR HANDLING

Buffalo Air Handling
Anthony, VA

Unit #:	SAMPLE
MODE:	0
FAN:	6.5
ACTIVE:	10500
BHP:	15.09
MOTOR ID:	20
FLA:	24.4

Plane 1: FAN INLET PLENUM
Plane 2: FAN DISCHARGE PLENUM
Plane 3: TEST DUCT (can be on unit intake or unit discharge)

INPUT DATA

	SP1	SP2	SP3
	-5.40	0.20	-0.44

BAROM.	TEMP. 1	TEMP. 2	DUCT DIM. 1	DUCT DIM. 2	FAN RPM
29.83	77	74	18.00	36.00	1763

VFD Amps	VFD % HP	VFD VOLTS	Power Meter HP	VFD Hz	Motor EFF	BELT LOSS FACTOR
10.0	75.00%	460	15.0	60.0	0.93	0.00

VPS READINGS

0.10	0.10	0.15	0.41	0.29	0.25	0.40	0.19
0.11	0.28	0.17	0.42	0.28	0.25	0.29	0.18
0.05	0.35	0.29	0.29	0.35	0.33	0.17	0.15

CALCULATION RESULTS

CALC. RMS VP: 0.235 "H2O

DENS.1: 0.0728 lbm/cu.ft.
DENS.2: 0.0741 lbm/cu.ft.

FAN CFM: 9033 cu.ft./min.

FAN TOTAL SP: 6.82 "H2O gauge

MOTOR BHP: 15.5 hp
FAN BHP: 15.5 hp

All fan and motor calculated data is based on an air density of 0.0750 lbs/cu.ft., an elevation of 0 feet and an air temperature of 70 deg F.

(Technician Signature) (Date)

(Engineering Manager Signature) (Date)

Certified to be Correct

(Witness Signature) (Date)

REV. A	1. REVISED ENTIRE L		
REV. B	1/22/10	1. CHANGED TITLE BLOCK LOGO.	

This drawing is the property of Buffalo Air Handling and is returnable upon request. It is for the confidential use of the buyer of the equipment and must not be reproduced, or shown to any third party, without prior written authorization of Buffalo Air Handling.

REFERENCE:

TITLE Factory Performance Test Procedure			
DRAWING STATUS Complete	DESIGNER: D.M. /T.R.K.	APPROVED BY: TRK	
BUFFALO AIR HANDLING	DATE: 6/18/09	PAGE: 6 of 7	
	DRAWING NO. (REF. JO#) ES-8104	REV. B	

ES-8104

Sample: Fan Curve With Plot of AMCA Tolerance Box and Typical Fan Performance Data

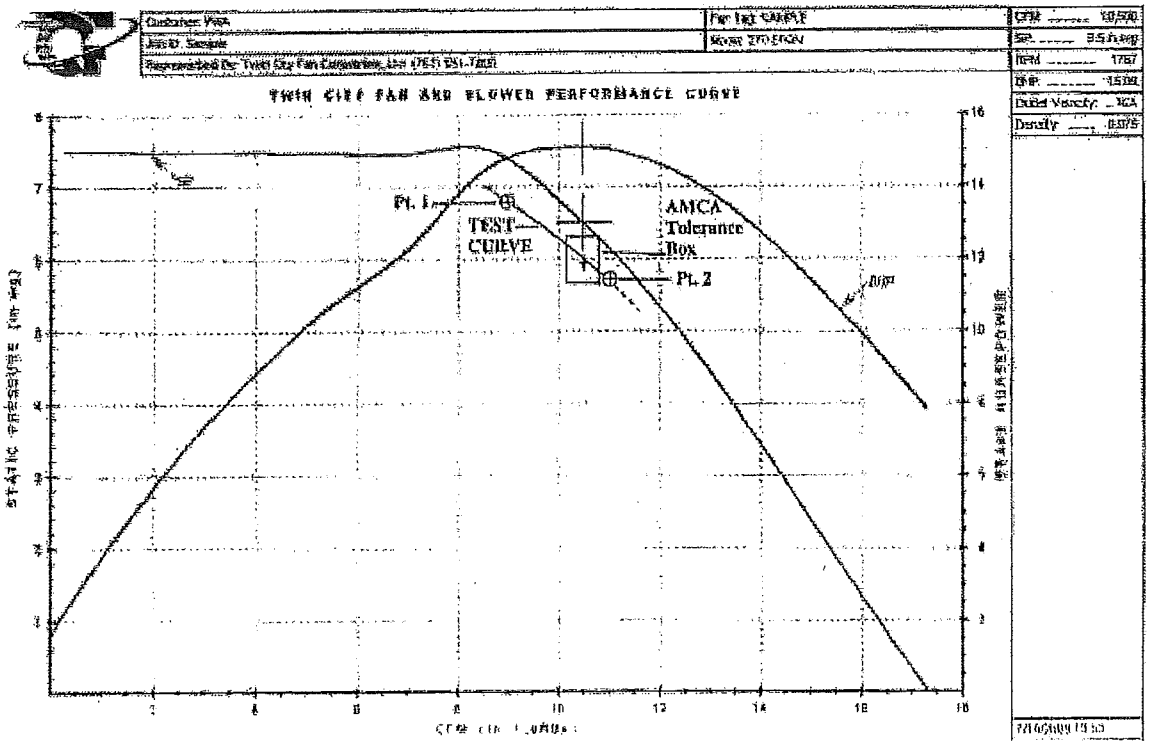

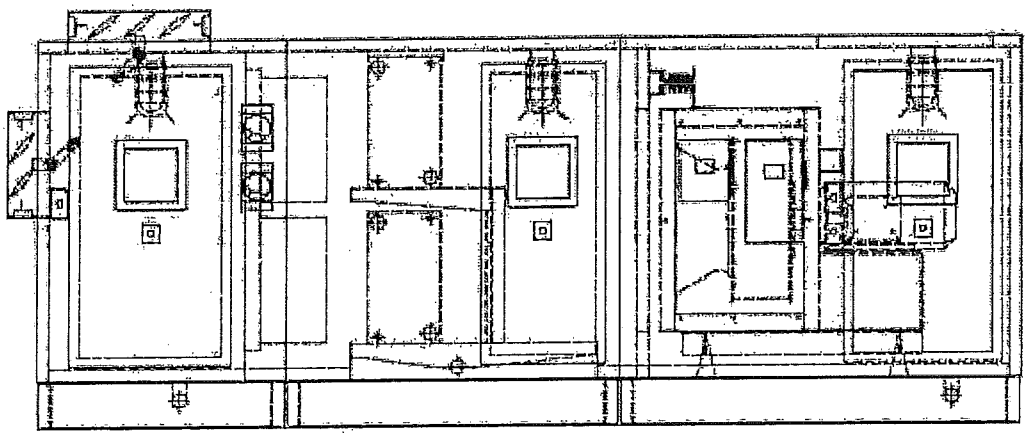

REV.		
A	1. REVISED ENTIRE E.	
B	1. CHANGED TITLE BLOCK LOGO.	1/22/10

This drawing is the property of Buffalo Air Handling and is returnable upon request. It is for the confidential use of the buyer of the equipment and must not be reproduced, or shown to any third party, without prior written authorization of Buffalo Air Handling.

REFERENCE:

TITLE: Factory Performance Test Procedure		
DRAWING STATUS: Complete	DESIGNER: D.M. /T.R.K.	APPROVED BY: TRK
BUFFALO AIR HANDLING	DATE: 6/18/09	PAGE: 7 of 7
	DRAWING NO. (REF. JO#): ES-8104	REV.: B

ES-8107

Factory Vibration Test Procedure

Introduction

This report outlines the test procedure to be used in the vibration evaluation of a production air-handling unit fan. The test will be conducted at the factory of Buffalo Air Handling, Amherst, Virginia. The test forms the basis for product qualification or acceptance criteria as established in accordance with ANSI/AMCA Standard 204-05, Balance Quality and Vibration Levels for Fans.

Scope

A completed air handling unit with a fan which has been aligned, balanced and in which there is no looseness will be run at design speed and as close as practical to the design pressure.

Test Procedure

A vibration analyzer, CSI Model 2120A Series from RBM Consultants or equal, will be used to measure the vibration levels in velocity (in/sec peak). The readings will be taken in the horizontal, axial (where accessible) and vertical direction on the housing of fan and motor bearings. When safe access is not available, as on direct driven axial fans, the vibration readings shall be taken on the fan housing adjacent to the motor bearings. All readings shall be reported in tabular form.

Acceptance Criteria

Acceptance is based upon ANSI/AMCA Standard 204-05, which specifies the peak vibration limit for fan tests conducted at the factory. A function of this acceptance criteria is whether the equipment is mounted upon fixed (rigid) supports or on spring isolators (flexible) supports.

Fan applications are sub-divided into balance and vibration categories BV-1 through BV-5. The balance and vibration category divisions reflect their application and drive power to arrive at appropriate balance and vibration (BV) levels as defined in ANSI/AMCA Standard 204-05. Those vibration levels for air-handling unit fans are as follows:

Application Factory, Filter-in	Driver Horsepower	Fan Application Category, BV	Rigid Mounting (in/sec)	Flexible Mounting (in/sec)
HVAC	≤ 5.0	BV-2	0.20	0.30
	> 5.0	BV-3	0.15	0.20

Buffalo Air Handling flexible mounting fan vibration acceptance criteria have been established at levels below the AMCA tolerance. Those factory test vibration levels are as follows.

Application Factory, Filter-in	Driver Horsepower	Fan Application Category, BV	Rigid Mounting (in/sec)	Flexible Mounting (in/sec)
HVAC	≤ 5.0	BV-2	0.16	0.16
	> 5.0	BV-3	0.15	0.16

REV.		
A	1. REVISED ENTIRE E.	
B	1. CHANGED TITLE BLOCK LOGO.	1/22/10

This drawing is the property of Buffalo Air Handling and is returnable upon request. It is for the confidential use of the buyer of the equipment and must not be reproduced, or shown to any third party, without prior written authorization of Buffalo Air Handling.

REFERENCE:

BUFFALO AIR HANDLING

TITLE: Factory Vibration Test		
DRAWING STATUS: Complete	DESIGNER: D.M. /T.R.K.	APPROVED BY: TRK
	DATE: 7/22/09	PAGE: 1 of 4
	DRAWING NO. (REF. JO#): ES-8107	REV.: B

Buffalo Air Handling will monitor the "overall" "filter-out" vibration levels at each location to check possible vibration sources other than balance. Overall vibration levels shall not exceed those stated below and will not be reported.

Application Factory, Filter-out	Driver Horsepower	Fan Application Category, BV	Rigid Mounting (in/sec)	Flexible Mounting (in/sec)
HVAC	≤ 5.0	BV-2	0.25	0.30
	> 5.0	BV-3	0.20	0.30

The field (*in-situ*) fan vibration level is not the responsibility of Buffalo Air Handling unless specified in the purchase contract and agreed to by Buffalo Air Handling. ANSI/AMCA 204-5 does not designate "filter-in" field fan vibration levels.

When verification of fan balance in the field is provided by Buffalo Air Handling the acceptance criteria shall be "filter-in" factory level as stated in ANSI/AMCA 204-5. Those vibration levels are as stated below.

Application Start-up, Filter-in	Driver Horsepower	Fan Application Category, BV	Rigid Mounting (in/sec)	Flexible Mounting (in/sec)
HVAC	≤ 5.0	BV-2	0.20	0.30
	> 5.0	BV-3	0.15	0.20

ANSI/AMCA 204-5 does designate field "filter-out" fan vibration levels. Buffalo Air Handling shall verify that the fan vibration levels are below ANSI/AMCA 204-5. Overall field "filter-out" vibration levels will not reported.

Application Start-up, Filter-out	Driver Horsepower	Fan Application Category, BV	Rigid Mounting (in/sec)	Flexible Mounting (in/sec)
HVAC	≤ 5.0	BV-2	0.30	0.50
	> 5.0	BV-3	0.25	0.35

When required and accepted by Buffalo Air Handling a velocity spectrum may be provided for the range of 0-200Hz (0-120,000 cpm) at the fan operating speed. A velocity spectrum analysis is not part of the standard vibration test.

Prior to acceptance of an order Buffalo Air Handling must review vibration criteria in addition to or exceeding those stated above.

ES-8107

Vibration Readings

Vibration readings shall be taken at fan and motor bearing locations a noted below.

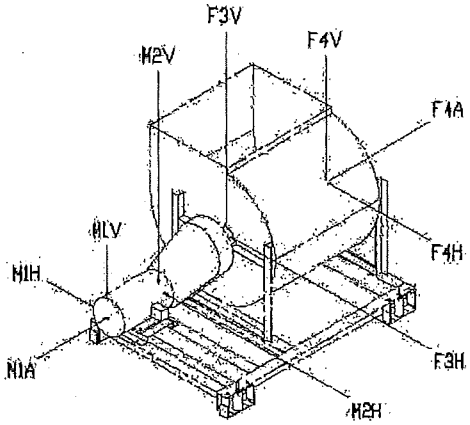

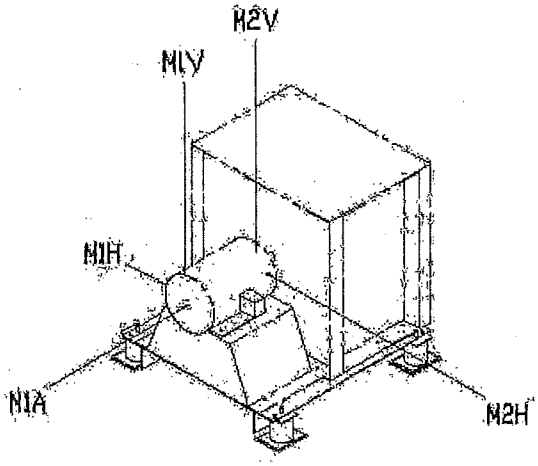

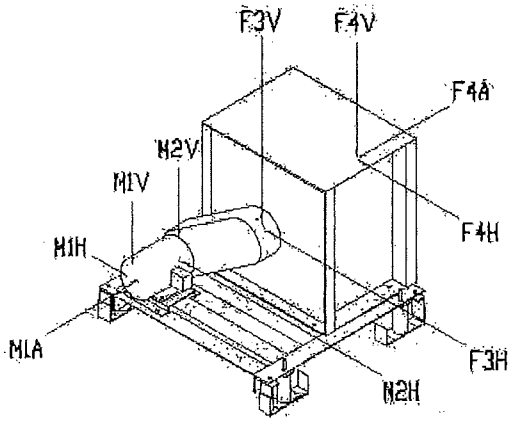

Vibration Report

A factory vibration report shall be provided to all parties involved. It shall be as shown below with a drawing of a representative fan. (Plenum fan vibration report sample below.)

REV.		
A	1. REVISED ENTIRE	
B	1. CHANGED TITLE BLOCK LOGO.	1/22/10

This drawing is the property of Buffalo Air Handling and is returnable upon request. It is for the confidential use of the buyer of the equipment and must not be reproduced, or shown to any third party, without prior written authorization of Buffalo Air Handling.

REFERENCE:

TITLE: Factory Vibration Test			
DRAWING STATUS: Complete	DESIGNER: D.M. /T.R.K.	APPROVED BY: TRK	
BUFFALO AIR HANDLING	DATE: 7/22/09	PAGE: 3 of 4	
	DRAWING NO. (REF. JO#): ES-8107		REV.: B

ES-8107

BUFFALO AIR HANDLING

Buffalo Air Handling

Vibration Report Plenum

Factory Vibration Test Report:

Shop Order No.: _____
Job Order No.: _____
Customer: _____
End User: _____
Engineer: _____
Mark No.: _____

Number of Fans: _____
Fan RPM: _____
Fan Mounting: _____
Fan Rating: _____
Fan Vibration Limit: _____
Pass/ Fail: _____

Date: _____
Technician: _____

Vibration Instrument: CSI 2120
Serial Number: _____

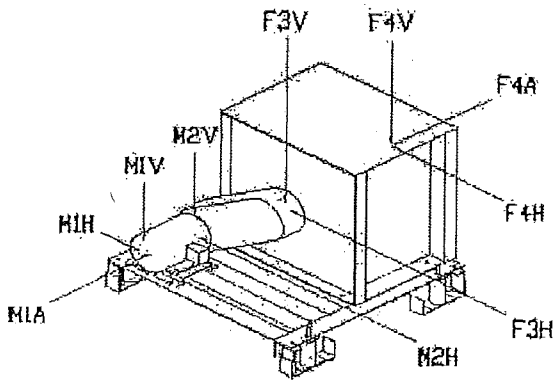

Vibration Readings (in/sec):

M1H _____
M1V _____
M1A _____
M2H _____
M2V _____

F3H _____
F3V _____
F4H _____
F4V _____
F4A _____

(Technician Signature, witness test) (Date)

(Witness Signature) (Date)

(Engineering Manager Signature) (Date)

Certified to be Correct

REV.		
A	1. REVISED ENTIR...	
B	1. CHANGED TITLE BLOCK LOGO.	1/22/10

This drawing is the property of Buffalo Air Handling and is returnable upon request. It is for the confidential use of the buyer of the equipment and must not be reproduced, or shown to any third party, without prior written authorization of Buffalo Air Handling.

REFERENCE:

TITLE: Factory Vibration Test			
DRAWING STATUS: Complete	DESIGNER: D.M. /T.R.K.	APPROVED BY: TRK	
BUFFALO AIR HANDLING	DATE: 7/22/09	PAGE: 4 of 4	
	DRAWING NO. (REF. JO#): ES-8107	REV.: B	

ES-8109

Deflection Test Procedure

Introduction

This report outlines the test procedure to be used to determine the deflection of the unit casing while subjected to an internal positive or negative pressure. The test will be conducted at the factory of Buffalo Air Handling, Amherst, Virginia. The test forms a basis for product qualification or acceptance by determining casing deflection for comparison with the acceptance criteria in accordance with established Buffalo Air Handling policy or with that contained in the applicable specification.

Scope

A completed air handling unit, which has passed mechanical run tests, shall be subjected to a positive and/or negative internal static pressure equal to 1.25 times the operating static pressure.

The operating pressure is defined as the maximum pressure an individual air handling unit section experiences under normal operating conditions. The operating pressure for an air handling unit is the summation of the external static pressure experienced by that section plus the internal pressure losses of the components within the section such as coils, dampers, filters, and/or other appurtenance losses that may be assigned to that section of the unit.

The difference between operating static pressure and other referenced pressures is as follows:

1. Design pressure is the pressure for which the unit has been designed. It would not occur during normal operation of the unit.

2. Fan static pressure is the rated pressure of the air handling unit fan. It incorporates both positive and negative internal and external pressures. These pressures are not applicable to all sections of an air handling unit during normal operation.

3. Fan peak pressure or shut off pressure are attributes of fan curve away from the operating pressure. These pressures would not occur during normal operation of the unit.

Test Procedure

Unit/section openings shall be closed off using plywood or sheet metal and sealed around the edges. A pressure gage shall be connected to the unit to monitor internal static pressure. Positive and/or negative pressure sections shall be connected to a test fan with ductwork. The test fan shall be throttled with an inlet plate or discharge damper to the test pressure. A taunt line will be drawn at mid-height along each side and at mid-width along the roof of the pressurized sections. Measurement to the nearest 1/16th inch will be recorded at panel extrusions between the line and the air handling unit before pressurization. Each measurement will be repeated at the test pressure. Deflection shall be defined as the difference between the two measurements.

REV.		
A	1. REVISED EN.	1/22/10
B	1. CHANGED TITLE BLOCK LOGO.	

This drawing is the property of Buffalo Air Handling and is returnable upon request. It is for the confidential use of the buyer of the equipment and must not be reproduced, or shown to any third party, without prior written authorization of Buffalo Air Handling.

REFERENCE:

TITLE: Factory Deflection Test Procedure			
DRAWING STATUS: Complete	DESIGNER: D.M. /T.R.K.	APPROVED BY: TRK	
BUFFALO AIR HANDLING	DATE: 8/19/09	PAGE: 1 of 2	
	DRAWING NO. (REF. JO#): ES-8109	REV.: B	

ES-8109

Acceptance Criteria

The air handling wall deflection shall not exceed 1/200th of the unit height and/or section length which ever is shorter. The air handling roof deflection shall not exceed 1/200th of the unit width and/or section length which ever is shorter.

Special Considerations

1. Exterior sides/surfaces containing more than 50% surface area of components such as filters, dampers or louvers are not subject to the deflection criteria.
2. The factory prior to acceptance of an order must approve test pressures in excess of 1.25 times the operating static pressure.
3. A negative pressure deflection test may be applied to an air handling unit, which has both positive and negative sections, as long as the negative sections comprise at least three fourths of the unit. The test pressure shall be 1.25 times the greater operating pressure. An example would be a draw through unit with a return fan and mixing sections. The return air section (negative) and mixing section (positive) would be incorporated into the negative pressure test of the draw through unit.

Test Report

Upon completion of the test a report shall be forwarded to all parties designated in the specification.

REV.		
REV. A	1. REVISED	
REV. B	1/22/10	1. CHANGED TITLE BLOCK LOGO.

This drawing is the property of Buffalo Air Handling and is returnable upon request. It is for the confidential use of the buyer of the equipment and must not be reproduced, or shown to any third party, without prior written authorization of Buffalo Air Handling.

REFERENCE:

TITLE: Factory Deflection Test Procedure			
DRAWING STATUS: Complete	DESIGNER: D.M. /T.R.K.	APPROVED BY: TRK	
BUFFALO AIR HANDLING	DATE: 8/19/09	PAGE: 2 of 2	
	DRAWING NO. (REF. JO#): ES-8109	REV.: B	

Tag: P-5.01 , P-5.02, P-9.01, P-9.02, P-10.01 & P-10.02

Specification: 15541

Manufacture: Taco Heating Hot Water Pumps

Drawing reference: M209 & M210

Location: B2 Ramp Level and Crawl Space

TACO PUMPS

REP: WALES DARBY, INC

PHONE: 908-560-1001

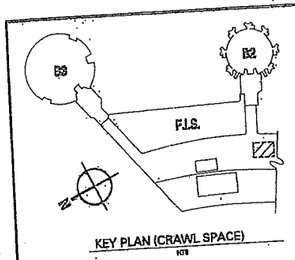

KEY PLAN (CRAWL SPACE)
NTS

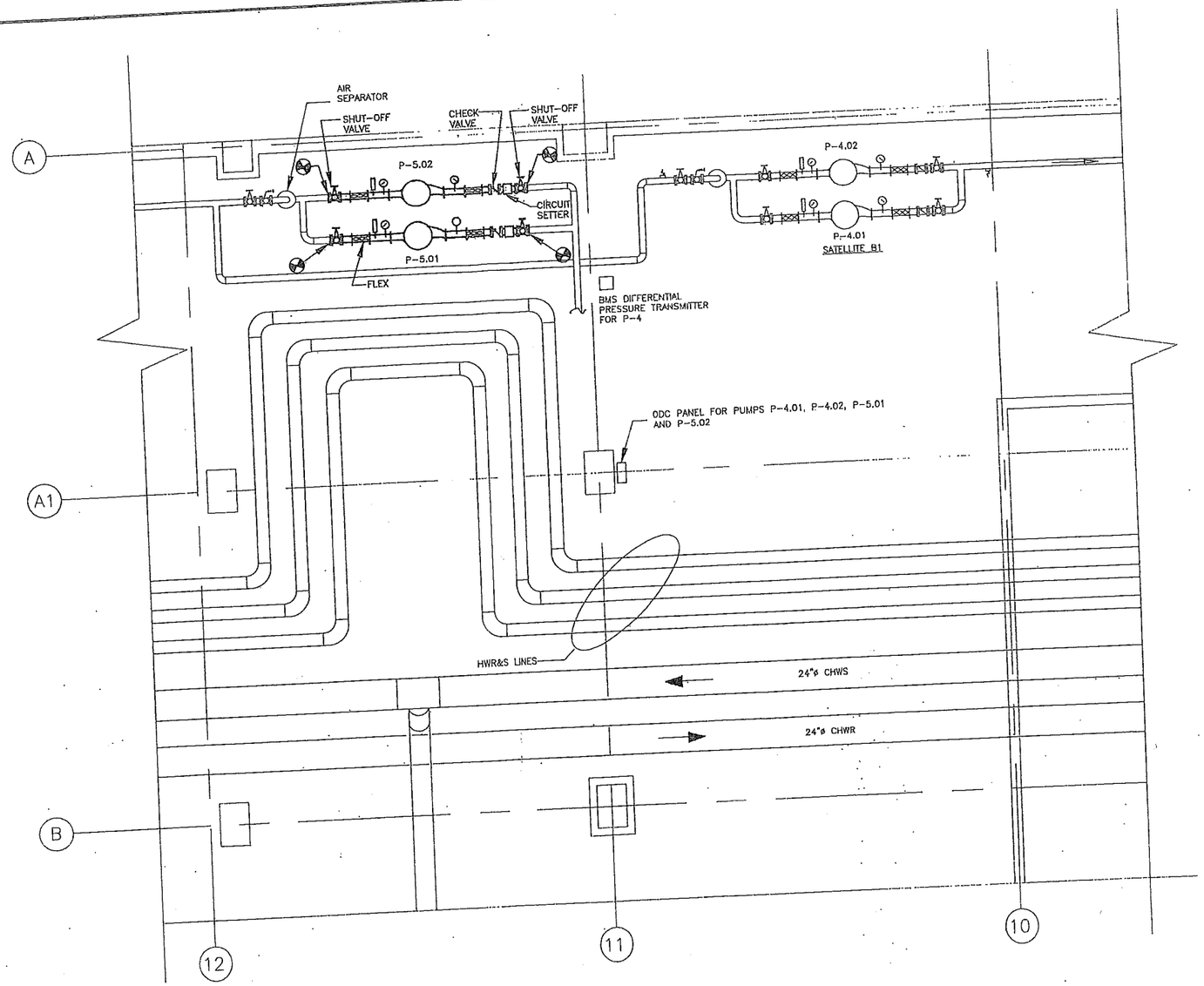

CRAWL SPACE PART PLAN
SATELLITE B2 - INSTALLATION
P.1 / M209
0 4 8
SCALE IN FEET

KEY NOTES:

① FURNISH AND INSTALL HOT WATER PUMPS P-5.01 & P-5.02.

② FURNISH AND INSTALL COMMUNICATIONS BUS FOR INTEGRATING P-5.01 & P-5.02 VFD'S, PRESSURE SENSORS, TEMPERATURE SENSORS, CURRENT SENSORS, ETC. WITH THE EXISTING HONEYWELL CONTROL PANEL. COORDINATE WITH THE ENGINEER SO THAT THE AUTOMATIC TEMPERATURE CONTROL MAINTENANCE CONTRACTOR OF THE EXISTING CONTROL PANEL MAY BE RETAINED TO PERFORM THE SYSTEM INTEGRATION.

③ REFER TO INLINE PUMP DETAIL FOR REQUIRED VALVINGS AND APPURTENANCES.

THE PORT AUTHORITY OF NY & NJ

R.G. VANDERWEIL ENGINEERS, LLP

VAL LEVIN
N.J. Professional Engineer # 24GE04679600

No.	Date	Revision	Approved

ENGINEERING DEPARTMENT

NEWARK LIBERTY INTERNATIONAL AIRPORT

MECHANICAL
HVAC

Title

TERMINAL B
REHABILITATION OF SATELLITE B-2
MECHANICAL AND ELECTRICAL SYSTEMS

CRAWL SPACE PART PLAN SATELLITE B2 INSTALLATION

This drawing subject to conditions in contract. All inventions, ideas, designs and methods herein are property of Port Authority and may not be used without its written consent.

All recipients of contract documents, including bidders and those who do not bid and their prospective subcontractors and suppliers who may receive all or a part of the contract documents or copies thereof, shall make every effort to ensure the secure and appropriate disposal of the Contract documents to prevent further disclosure of the information disclosed in the documents. Secure and appropriate disposal includes methods of document destruction such as shredding or arrangements with waste haulers that ensure that third persons will not have access to the documents' contents after bidding, or other disposal. Documents may also be returned for disposal purposes to the Contract Specialist at the Port Authority Carteret, Newark NJ 07108 or the other Port Authority Procurement Unit locations. The Port Authority will be for any person to alter a document in any way. It is a violation of law for any person to alter a document in any way, unless acting under the direction of a licensed professional engineer or registered architect. If this document bearing the seal of an engineer/architect is altered, the altering engineer/architect shall affix to the document their seal and the notation "altered by" followed by their signature and the date of such alteration, and a specific description of the alteration.

J. DUMORNE	J. DUMORNE	S. CSONTOS
Designed by	Drawn by	Checked by

Date 05/12/2010

Contract Number EWR-154.081

Drawing Number M209

PID# 08353000

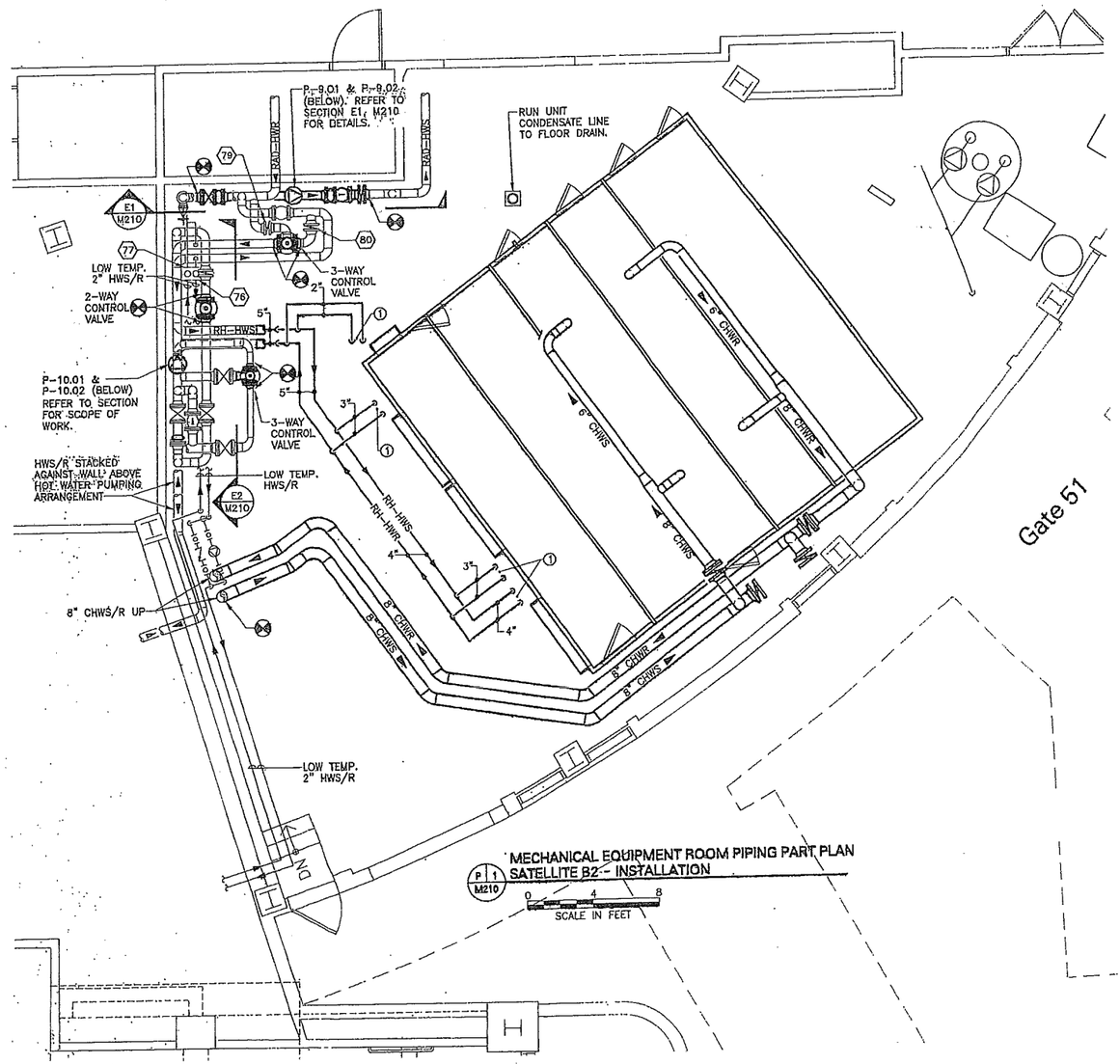

MECHANICAL EQUIPMENT ROOM PIPING PART PLAN
SATELLITE B2 - INSTALLATION

SCALE IN FEET 0 4 8

GENERAL NOTE:

① REFER TO M404 FOR ARCHITECTURAL INSTALLATION DETAIL.

KEY NOTES:

① CONNECT TO REHEAT COIL.

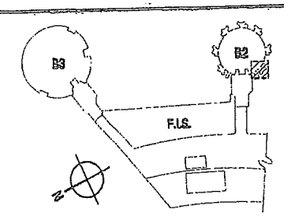

KEY PLAN (RAMP LEVEL)

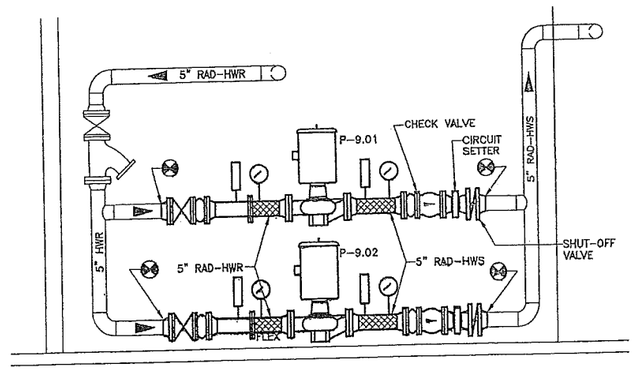

E1 / M210 P-9.01 AND 9.02 ELEVATION

SCALE IN FEET 0 2 4

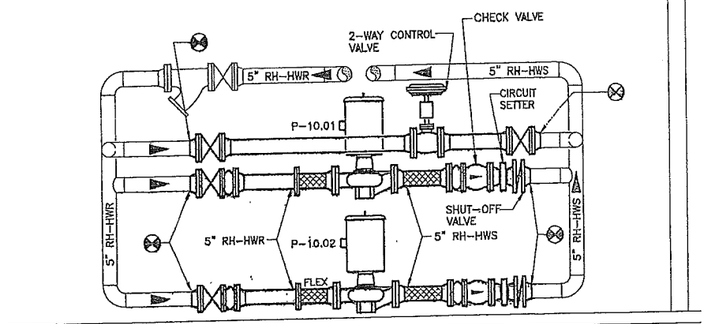

E2 / M210 P-10.01 AND 10.02 ELEVATION

SCALE IN FEET 0 2 4

Sheet 32 of 183

THE PORT AUTHORITY OF NY & NJ

R.G. VANDERWEIL ENGINEERS, LLP

VAL LEVIN
N.J. Professional Engineer # 24GE04679600

No.	Date	Revision	Approved

ENGINEERING DEPARTMENT

NEWARK LIBERTY INTERNATIONAL AIRPORT

MECHANICAL HVAC

Title

TERMINAL B
REHABILITATION OF SATELLITE B-2
MECHANICAL AND ELECTRICAL SYSTEMS

MECHANICAL EQUIPMENT ROOM PIPING PART PLAN SATELLITE B2 INSTALLATION

This drawing subject to conditions in contract. All inventions, ideas, designs and methods herein are reserved to Port Authority and may not be used without its written consent.

All recipients of Contract documents, including bidders and those who do not bid, shall keep confidential all information contained in the documents. Secure and appropriate disposal includes methods of document destruction such as shredding or incineration. Failure to comply with these requirements may result in disqualification from bidding. Third persons will not have access to the documents' material after bidding, during, or after Contract performance, except as may be required pursuant to the Public Records Act, N.J.S.A. 47:1A-1 et seq. Newark Airport: Any questions of this Director of Aviation, One Madison Avenue, NY, New York NY 10010.

It is a violation of law for any person to alter a document in any way, unless acting under the direction of a licensed professional engineer or registered architect. If this document bearing the seal of an engineer/architect is altered, the alterer engineer/architect shall affix to the document their seal and the notation "altered by" followed by their signature and the date of such alteration, and a specific description of the alteration.

J. DUMORNE	J. DUMORNE	S. CSONTOS
Designed by	Drawn by	Checked by

Date 05/12/2010

Contract Number EWR-154.081

Drawing Number M210

PID# 08353000

KV 6009 P-5.01 & P-5.02

KV Vertical In-Line Pump

302-031

Installation, Operation & Maintenance Manual

SUPERSEDES: 302-031 May 1, 2010

EFFECTIVE: July 1, 2010

Plant ID No. 001-1013

INSTALLATION

SAFETY REQUIREMENTS

1. **IMPORTANT!** These instructions should be read completely prior to installation of the equipment. A copy of these instructions should be retained on file for future reference.
2. This pump is intended for the circulation of water or other suitable HVAC media. It is not intended for hazardous, corrosive, or flammable liquids.
3. Pump must not be operated until all piping and/or electrical connections are in place.
4. Proper care and suitable equipment should be used to move and install this heavy equipment.
5. Care should be taken when installing pipe systems to avoid placing an excessive load on the pump unions.
6. Refer to motor installation instructions to determine proper terminal connections in order to obtain correct pump rotation.
7. When the system piping is used as an earth bonding path for the building electrical services (check local codes), the pump should not be relied upon as part of the circuit. A properly installed bridging connection should be provided.
8. If electrical connection is to be made using any means other than rigid conduit, proper strain relief must be provided (min 100N tension).
9. Pump should be installed according to local electrical and safety codes using appropriate size wire and suitable over current protection. It should use a lockable isolator or circuit breaker conforming to applicable electrical codes.
10. It is recommended that the pump be fitted with a suitable "emergency stop" per the requirements of applicable electrical codes.

A. Receiving Pump

1. Inspect for shipping damage. If a shortage or damage occurs, contact carrier immediately.

B. Location

1. Install vertically with motor up. Consult factory for horizontal mounting.
2. Pump should be accessible for inspection and repair work, head room must be provided for the use of hoist or tackle as necessary.
3. Lift pump by slinging through motor eye bolts and securing through pump adapter.
4. **In no case should any part of motor be covered with insulation.**

C. Foundation

1. The pump must always be supported.
2. Pumps with smaller motors may be suspended in the piping, provided the piping is supported adjacent to the pump.
3. For pumps with larger motors, the pump should be attached to a support utilizing the tapped hole or holes in the bottom of the pump casing. **Note: Piping loads shall not be applied to the pump.**
4. Pump must be allowed to move with piping movement. Expansion of piping must be taken into account when piping and suitable devices should be employed. Do not rigidly connect the pump to the floor. **Note: Provide vibration isolation pads under floor mounted supports. Do not support unit by the motor eye-bolts.**

OPERATION

A. Before operating for the first time check the following:

1. Is motor correctly wired for voltage available.
2. Has pump been primed. Pump should never be run dry. **Extra effort may be required to get the air out of the seal chamber.**

> **Caution: Make sure power supply to pump motor is locked out before touching motor shaft.**

3. All rotating parts turn freely.

B. Starting pump

1. Jog pump to check proper rotation.
2. Start pump with discharge valve closed.

> **DANGER: MAKE SURE SUCTION VALVE IS OPEN!!**

3. When correct pressure has been reached, open discharge valve slowly.
4. **Do not operate pump for prolonged periods with discharge valve closed, so as to avoid overheating and potential damaging loads.**

5. Pump should be stopped if any of the following occur:
   a. No discharge.
   b. Insufficient discharge.
   c. Insufficient pressure.
   d. Loss of suction.
   e. Excessive power consumption.
   f. Vibration.

Check problem analysis further in the manual for help in troubleshooting.

MAINTENANCE

A. Routine Inspections

Routine inspections should be made on a regular basis. Inspections made while pump is running should reveal potential failures.

1. Inspect motor bearings for any sign of temperature rise. Temperature should not exceed 160°F. Temperature rise may indicate the early stages of bearing problems.
2. Listen for any unusual noise.
   a. Air trapped in pump
   b. Hydraulic noise.
   c. Mechanical noise in motor and/or pump.
3. Check suction gauge reading and confirm that it is normal.
4. Check discharge gauge reading and confirm that it is normal. If gauge readings are abnormal find out why.

ote: Suction and discharge gauges should read the same with pump stopped.

B. Close Coupled Pumps

The pump section is attached directly to the motor shaft and does not contain bearings.

C. Close Coupled Motors

The motor must be lubricated in accordance with the manufacturer's recommendations. **Do not over lubricate the motor bearings as this could cause premature bearing failure.**

D. Mechanical Seal

The mechanical seal is the "John Crane" Type 21 General Purpose Seal for the 175 psig pressure rating.

A "John Crane" Type 2 General Purpose Seal is used for the 300 psig pressure rating.

DIS-ASSEMBLY AND RE-ASSEMBLY

A. General

If the pump has been maintained and serviced properly, breakdowns which necessitate the pump being dis-assembled should not occur often.

1. If a problem occurs, the cause should be determined, if possible, before dis-assembling. (See "Problem Analysis")
2. If the pump is being dis-assembled, all parts must be carefully handled, avoid heavy blows and shocks.
3. All parts must be carefully cleaned and inspected for wear. Recondition or replace parts where necessary.

B. Dis-Assembly

1. Drain liquid from casing by removing drain plug.

> **Caution: Allow pump to cool and secure suction and discharge valves before working on pump!!**

2. Remove re-circulation line.
3. Remove bolts holding cover/adapter to casing, pry cover/adapter and motor assembly from casing.
4. Remove impeller bolt in a counterclockwise direction. Remove impeller and key.
5. In all cases of mechanical seal arrangement, after removing the sleeve and its seal assembly, the seal rotating element may be drawn off the shaft sleeve. Note: Apply silicone grease on the OD of the sleeve in the area between the seal and the end of the sleeve. This will help removal of the old seal. The stationary element is to be removed from the cover.
6. All parts must be cleaned and inspected for wear. Replace parts where necessary.

C. Re-Assembly

1. Be certain that all parts to be replaced are free from burrs, with screw threads and connecting faces clear and free from damage.
2. Insert stationary element of seal into cover adapter, slip cover-adapter over shaft and engage rabbit of motor. **Note: Do not touch the seal surfaces because this may result in leakage. Do not contaminate seal faces with fingerprints.**
3. Lubricate smaller OD of shaft sleeve with silicone grease. **Do not use petroleum oil or grease.**
4. Place spring on shaft sleeve to abut against sleeve shoulder. Slide rotary seal on sleeve until it contacts spring.
5. Slide the shaft sleeve on the shaft, larger bore first. Be certain the O-ring is correctly seated in the groove.
6. Assemble impeller key and impeller on shaft. Refit with new impeller washer on impeller bolt and tighten carefully. Be certain that the impeller rotates freely by hand.
7. Apply a few spots of gasket adhesive to gasket surface of cover. Place a new casing gasket against gasket surface and press against adhesive.
8. Assemble cover-adapter complete with motor into casing. Insure that gasket is seated correctly. Install hex-headed cap screws into casing tapings and tighten uniformly.
9. Reconnect re-circulation line and drain plug.

APPLICATION

1. Working Pressure: 175 psig
   Optional Working Pressure: 300 psig
2. Temperature: 250°F Standard
   300°F Hi Temperature

CASING/IMPELLER WEAR RING CLEARANCES

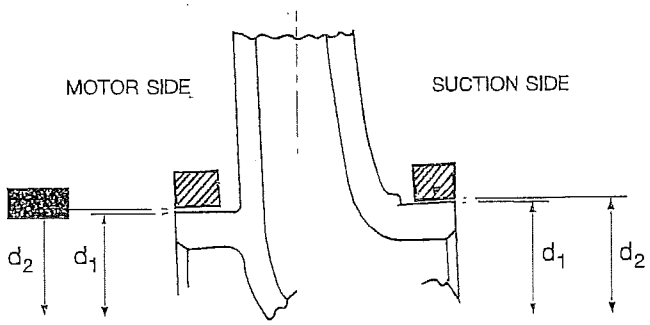

KV CASING/IMPELLER WEAR RING CLEARANCES

PUMP SIZE	WEAR RING-SUCTION SIDE				CLEARANCE	
	DIA d_1		DIA d_2			
	MAX	MIN	MAX	MIN	MAX	MIN
1506	2.363	2.361	2.377	2.375	.016	.012
1507	2.738	2.736	2.752	2.750	.016	.012
2006	2.863	2.861	2.877	2.875	.016	.012
2007	2.938	2.936	2.952	2.950	.016	.012
2009	3.363	3.361	3.377	3.375	.016	.012
2011	3.488	3.486	3.502	3.500	.016	.012
3006	3.238	3.236	3.252	3.250	.016	.012
3007	3.688	3.686	3.702	3.700	.016	.012
3009	3.613	3.611	3.627	3.625	.016	.012
3011	3.988	3.986	4.002	4.000	.016	.012
3013	3.738	3.736	3.752	3.750	.016	.012
4007	4.238	4.236	4.252	4.250	.016	.012
4009	4.611	4.609	4.627	4.625	.018	.014
4011	4.738	4.736	4.752	4.750	.016	.012
4013	4.613	4.611	4.627	4.625	.016	.012
5007	4.988	4.986	5.002	5.000	.016	.012
6009	5.861	5.859	5.877	5.875	.018	.014
6011	5.861	5.859	5.877	5.875	.018	.014
6013	5.861	5.859	5.877	5.875	.018	.014
8011	7.234	7.232	7.252	7.250	.020	.016
8013	7.734	7.732	7.752	7.750	.020	.016

OPTIONAL CASING WEAR RING FITTED TO SUCTION SIDE ONLY

Addendum to KV Installation, Operation & Maintenance Manual

THE FOLLOWING INSTRUCTIONS APPLY TO VERTICAL IN-LINE PUMPS UP THROUGH 10" FLANGE CONNECTIONS.

INSTALLATION

A1. Location

In open systems, locate the unit as close as practical to the liquid supply source, with a short, direct suction pipe. Ensure adequate space is left above and around the unit for operation, maintenance, service and inspection of parts.

In closed systems, where possible, the pumps should be installed immediately downstream of the expansion tank/make-up connection. This is the point of zero pressure change and is necessary for effective pump operation. Do not install more than one expansion tank connection into any closed hydronic system.

Electric motor driven pumps should not be located in damp or dusty location without special protection.

Airflow into the motor and/or motor fan should not be obstructed.

A2. Installation

In order to achieve the full added value of the Vertical In-Line pump design it is important that you ensure the pump is affixed to the system piping by the pump flanges and the pump and motor assembly is allowed to float freely with the expansion and contraction of the piping system. Should any vertical in-line pump use supports to the structure, **it is imperative that no pipe strain is imposed on the pump flanges.** Compliant mounts such as springs or "waffle" style isolation pads should be used under the pipe supports if the pump is not truly pipe mounted.

Various installation arrangements are detailed in Figures A1.1 through A1.12.

Vertical In-Line pumps may be installed directly in the system piping with no additional support. Pipe hangers are simply sized for the additional weight of the pumping unit. Many pumps are installed in this manner and are mounted at sufficient height to take zero floor space. (Figure A1.1)

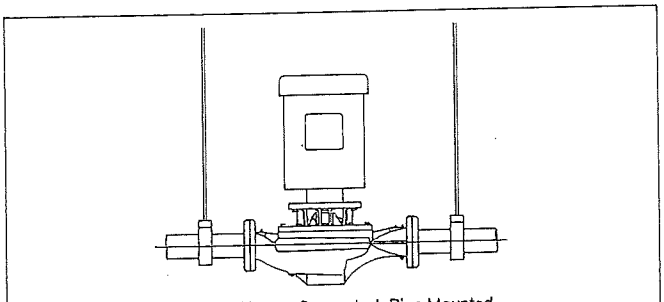

Fig. A1.1 Hanger Supported, Pipe Mounted

Piping for smaller in-line pumps (typically 15 hp and below) is hung close to the ceiling in many mechanical rooms. Larger pumps are often mounted near ground level for ease of maintenance. Figure A1.2 illustrates such an arrangement with the piping supported at the ceiling and the vertical pump installed with a Taco Suction Diffuser (RSP) and Plus Two Multi-Purpose Valve.

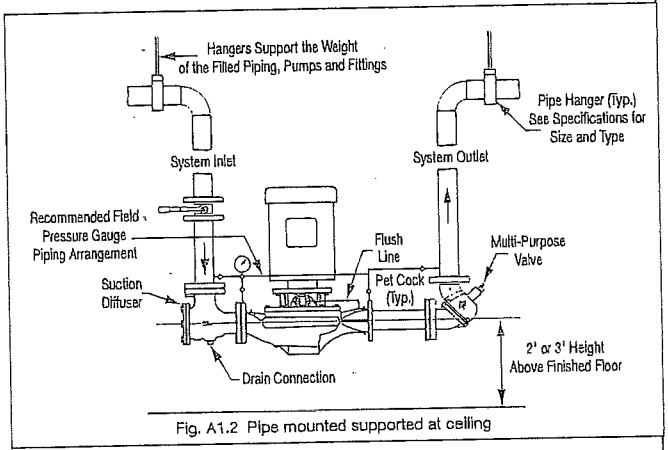

Fig. A1.2 Pipe mounted supported at ceiling

Should additional space saving be required the discharge spool piece and Plus Two Multi-Purpose Valve may be replaced by a long-radius elbow and the Plus Two Multi-Purpose Valve field converted to a straight pattern configuration and installed in the vertical discharge pipe. (Figure A1.3)

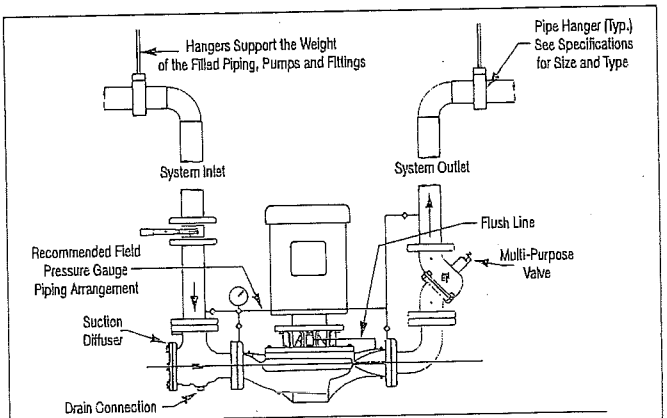

Fig. A1.3 Discharge elbow for minimum footprint

A similar arrangement to Figure A1.2 with additional floor mounted pipe-stools isolated from the structure by 'waffle' style isolation pads under the Suction Diffuser (RSP) and Plus Two Multi-Purpose Valve is illustrated in Figure A1.4.

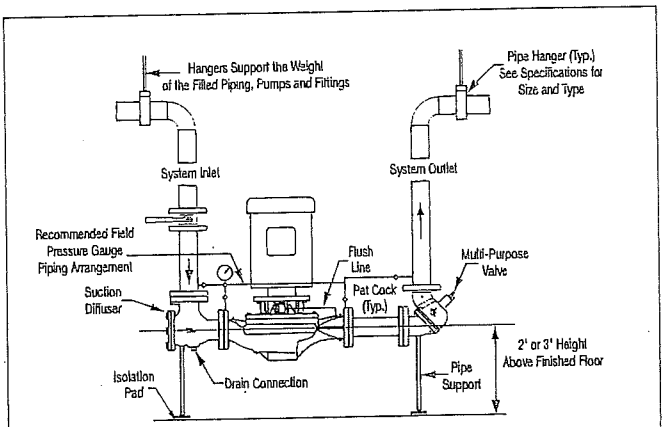

Fig. A1.4 With additional pipe supports

Floor mounted saddle supports (Figure A1.5) are typical for condenser water pumps where cooling tower base is near mechanical room elevation.

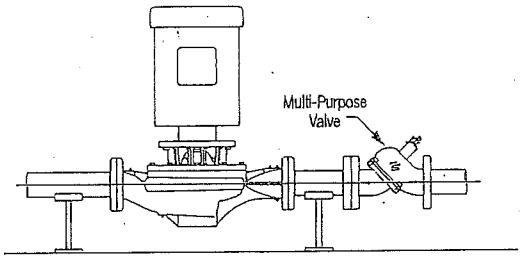

Fig. A1.5 Floor saddle support

Where required, additional floor support may be used as shown in Figure A1.6. Install a "waffle" isolation pad under the pump. **NOTE: The pump should not be rigidly attached to the base/pad structure.**

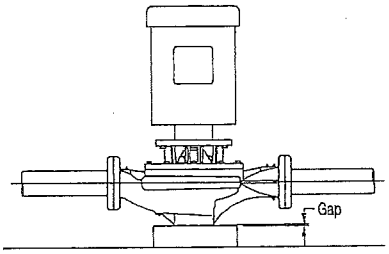

Fig. A1.6 Additional floor support

Stanchion plates at the pump suction and discharge ports may be supplied for installation convenience. Isolation pads must be used under the legs and monitored as pipe hangers are adjusted to ensure the pump flanges are not supporting the piping. Bolting to the floor or housekeeping pad is not recommended. If the stanchions are bolted down the bolts must be isolated from the stanchion or inertia base and flexible pipe connectors used (Figure A1.7).

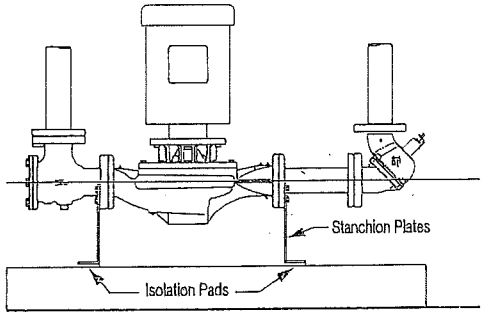

Fig. A1.7 With stanchion plates

An installation with stanchion plates for seismically active regions is illustrated in Figure A1.8. Seismically rated isolation pads or snubbers with bolts isolated from the stanchion plates are installed to restrain the pump during a seismic event. Pipe hangers carry the weight of the equipment as seismic components are designed only to restrain the equipment during a seismic event.

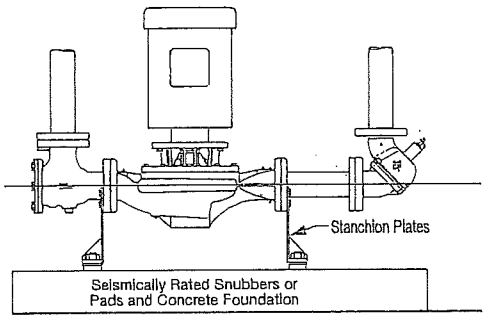

Fig. A1.8 Seismic region installation

Close coupled KV In-line pumps up to 15hp (254 frames) / 11kW may be installed with the shaft horizontal (Figure A1.9).

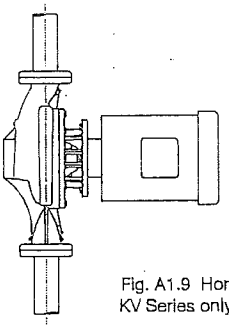

Fig. A1.9 Horizontal Mounting
KV Series only to 15 hp (11kW)

In systems utilizing grooved pipe, flange adapter locking devices or welded flanges at the pump should be used to prevent the possibility of pipe mounted pumps rotating in the piping (Figure A1.10).

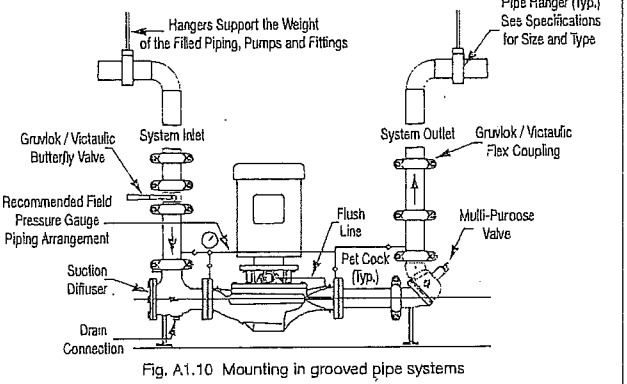

Fig. A1.10 Mounting in grooved pipe systems

DO NOT support the unit by the motor eye bolts (Figure A1.11) or by any other part of the motor.

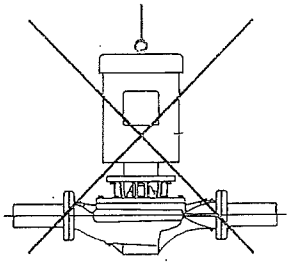

Fig. A1.11 Motor lifting hook supported

Connecting the pump to a permanent rigid base (Figure A1.12) is not recommended unless isolated from the piping by flexible connectors and the base isolated from the building structure on an inertia base. (Figure A1.12 is generally acceptable when using plastic piping.)

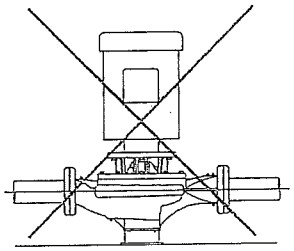

Fig. A1.12 Mounted on rigid base without flexible connectors

PUMP PIPING - GENERAL

NEVER connect any pump to piping, unless extra care is taken to measure and align the piping flanges well. Always start piping from pump. Use as few bends as possible and preferably long radius elbows.

Do not use flexible connectors on the suction or discharge of a vertical in-line pump, unless the pump is rigidly mounted to a foundation. Ensure piping exerts no strain on pump as this could distort the casing causing breakage or early failure due to pump misalignment. All connecting pipe flanges must be square to the pipe work and parallel to the pump flanges.

Suction and discharge pipes may be increased or decreased at pump nozzle to suit pump capacity and particular conditions of installation. Use eccentric reducers on suction connection with flat side uppermost.

Lay out the suction line with a continual rise towards the pump without high points, thus eliminating possibility of air pockets that may prevent the pump from operating effectively.

PROBLEM ANALYSIS

A. No Discharge
1. Pump not primed.
2. Speed too low.
3. System head too high.
4. Suction lift higher than pump is designed.
5. Impeller completely clogged.
6. Incorrect direction of rotation.
7. Air leak in suction line.

B. Insufficient Discharge Flow
1. Air leak in suction line.
2. Speed too low.
3. System head higher than anticipated.
4. Insufficient NPSH. Suction lift too high. Check gauges. Also check for clogged suction line or screen.
5. Impeller partially plugged.
6. Mechanical defects.
   a. Worn wear rings
   b. Impeller damaged.
   c. Incorrect direction of rotation.

C. Insufficient Discharge Pressure
1. Speed too low.
2. System head less than anticipated.
3. Air in system.
4. Mechanical defects.
   a. Worn wear rings.
   b. Impeller damaged.
   c. Impeller diameter too small.
   d. Incorrect direction of rotation.

D. Loss of Suction
1. Leak in suction line.
2. Suction lift too high.
3. Insufficient NPSH.
4. Air in system.
5. Casing gasket defective.

E. Excessive Power Consumption
1. Speed too high.
2. System head lower than rating.
3. Specific gravity of liquid too high.
4. Mechanical defects.
   a. Shaft bent.
   b. Rotating elements bind.
   c. Worn wear ring.

F. Vibration
1. Air leak in suction line.
2. Air in system.
3. Impeller partially plugged.
4. Foundation not rigid.
5. Mechanical defects.
   a. Damaged impeller.
   b. Motor bearings worn.
   c. Rotor out of balance.
   d. Shaft bent.

G. Motor Runs Hot
1. Speed too high.
2. Specific gravity of liquid too high.
3. Mechanical defects.
   a. Shaft bent.
   b. Rotating elements bind.
   c. Defective motor.
   d. Voltage lower than rating.

LIMITED WARRANTY STATEMENT

Taco, Inc. will repair or replace without charge (at the company's option) any commercial pump product or part which is proven defective under normal use within one (1) year from the date of start-up or one (1) year and six (6) months from date of shipment (whichever occurs first).

Motors provided on commercial pumps are not covered by this warranty, and are warranted by the motor manufacturer. For complete details on motor warranty returns, the purchaser should contact the motor manufacturer's local service repair center or contact the motor manufacturer directly.

Seals provided on commercial pumps are not covered by this warranty.

In order to obtain service under this warranty, it is the responsibility of the purchaser to promptly notify the local Taco stocking distributor or Taco in writing and promptly deliver the subject product or part, delivery prepaid, to the stocking distributor. For assistance on warranty returns, the purchaser may either contact the local Taco stocking distributor or Taco. If the subject product or part contains no defect as covered in this warranty, the purchaser will be billed for parts and labor charges in effect at time of factory examination and repair.

Any Taco product or part not installed or operated in conformity with Taco instructions or which has been subject to misuse, misapplication, the addition of petroleum-based fluids or certain chemical additives to the systems, or other abuse, will not be covered by this warranty.

If in doubt as to whether a particular substance is suitable for use with a Taco product or part, or for any application restrictions, consult the applicable Taco instruction sheets or contact Taco at [401-942-8000].

Taco reserves the right to provide replacement products and parts which are substantially similar in design and functionally equivalent to the defective product or part. Taco reserves the right to make changes in details of design, construction, or arrangement of materials of its products without notification.

TACO OFFERS THIS WARRANTY IN LIEU OF ALL OTHER EXPRESS WARRANTIES. ANY WARRANTY IMPLIED BY LAW INCLUDING WARRANTIES OF MERCHANTABILITY OR FITNESS IS IN EFFECT ONLY FOR THE DURATION OF THE EXPRESS WARRANTY SET FORTH IN THE FIRST PARAGRAPH ABOVE.

THE ABOVE WARRANTIES ARE IN LIEU OF ALL OTHER WARRANTIES, EXPRESS OR STATUTORY, OR ANY OTHER WARRANTY OBLIGATION ON THE PART OF TACO.

TACO WILL NOT BE LIABLE FOR ANY SPECIAL, INCIDENTAL, INDIRECT OR CONSEQUENTIAL DAMAGES RESULTING FROM THE USE OF ITS PRODUCTS OR ANY INCIDENTAL COSTS OF REMOVING OR REPLACING DEFECTIVE PRODUCTS.

This warranty gives the purchaser specific rights, and the purchaser may have other rights which vary from state to state. Some states do not allow limitations on how long an implied warranty lasts or on the exclusion of incidental or consequential damages, so these limitations or exclusions may not apply to you.

Do it Once. Do it Right.®

TACO, INC., 1160 Cranston Street, Cranston, RI 02920 Telephone: (401) 942-8000 FAX: (401) 942-2360.
TACO (Canada), Ltd., 8450 Lawson Road, Unit #3, Milton, Ontario L9T 0J8. Telephone: 905/564-9422. FAX: 905/564-9436.

Visit our web site at: http://www.taco-hvac.com

Printed in USA
Copyright 2010
TACO, Inc.

KV-4009 P-9.01, P-9.62

KV Vertical In-Line Pump

302-031

Installation, Operation & Maintenance Manual

SUPERSEDES: 302-031 May 1, 2010

EFFECTIVE: July 1, 2010

Plant ID No. 001-1013

INSTALLATION

SAFETY REQUIREMENTS

1. **IMPORTANT!** These instructions should be read completely prior to installation of the equipment. A copy of these instructions should be retained on file for future reference.
2. This pump is intended for the circulation of water or other suitable HVAC media. It is not intended for hazardous, corrosive, or flammable liquids.
3. Pump must not be operated until all piping and/or electrical connections are in place.
4. Proper care and suitable equipment should be used to move and install this heavy equipment.
5. Care should be taken when installing pipe systems to avoid placing an excessive load on the pump unions.
6. Refer to motor installation instructions to determine proper terminal connections in order to obtain correct pump rotation.
7. When the system piping is used as an earth bonding path for the building electrical services (check local codes), the pump should not be relied upon as part of the circuit. A properly installed bridging connection should be provided.
8. If electrical connection is to be made using any means other than rigid conduit, proper strain relief must be provided (min 100N tension).
9. Pump should be installed according to local electrical and safety codes using appropriate size wire and suitable over current protection. It should use a lockable isolator or circuit breaker conforming to applicable electrical codes.
10. It is recommended that the pump be fitted with a suitable "emergency stop" per the requirements of applicable electrical codes.

A. Receiving Pump

1. Inspect for shipping damage. If a shortage or damage occurs, contact carrier immediately.

B. Location

1. Install vertically with motor up. Consult factory for horizontal mounting.
2. Pump should be accessible for inspection and repair work, head room must be provided for the use of hoist or tackle as necessary.
3. Lift pump by slinging through motor eye bolts and securing through pump adapter.
4. **In no case should any part of motor be covered with insulation.**

C. Foundation

1. The pump must always be supported.
2. Pumps with smaller motors may be suspended in the piping, provided the piping is supported adjacent to the pump.
3. For pumps with larger motors, the pump should be attached to a support utilizing the tapped hole or holes in the bottom of the pump casing. **Note: Piping loads shall not be applied to the pump.**
4. Pump must be allowed to move with piping movement. Expansion of piping must be taken into account when piping and suitable devices should be employed. Do not rigidly connect the pump to the floor. **Note: Provide vibration isolation pads under floor mounted supports. Do not support unit by the motor eye-bolts.**

OPERATION

A. Before operating for the first time check the following:

1. Is motor correctly wired for voltage available.
2. Has pump been primed. Pump should never be run dry. **Extra effort may be required to get the air out of the seal chamber.**

> **Caution: Make sure power supply to pump motor is locked out before touching motor shaft.**

3. All rotating parts turn freely.

B. Starting pump

1. Jog pump to check proper rotation.
2. Start pump with discharge valve closed.

> **DANGER: MAKE SURE SUCTION VALVE IS OPEN!!**

3. When correct pressure has been reached, open discharge valve slowly.
4. **Do not operate pump for prolonged periods with discharge valve closed, so as to avoid overheating and potential damaging loads.**

5. Pump should be stopped if any of the following occur:
   a. No discharge.
   b. Insufficient discharge.
   c. Insufficient pressure.
   d. Loss of suction.
   e. Excessive power consumption.
   f. Vibration.

Check problem analysis further in the manual for help in troubleshooting.

MAINTENANCE

A. Routine Inspections

Routine inspections should be made on a regular basis. Inspections made while pump is running should reveal potential failures.

1. Inspect motor bearings for any sign of temperature rise. Temperature should not exceed 160°F. Temperature rise may indicate the early stages of bearing problems.
2. Listen for any unusual noise.
   a. Air trapped in pump
   b. Hydraulic noise.
   c. Mechanical noise in motor and/or pump.
3. Check suction gauge reading and confirm that it is normal.
4. Check discharge gauge reading and confirm that it is normal. If gauge readings are abnormal find out why.

Note: Suction and discharge gauges should read the same with pump stopped.

B. Close Coupled Pumps

The pump section is attached directly to the motor shaft and does not contain bearings.

C. Close Coupled Motors

The motor must be lubricated in accordance with the manufacturer's recommendations. **Do not over lubricate the motor bearings as this could cause premature bearing failure.**

D. Mechanical Seal

The mechanical seal is the "John Crane" Type 21 General Purpose Seal for the 175 psig pressure rating.

A "John Crane" Type 2 General Purpose Seal is used for the 300 psig pressure rating.

DIS-ASSEMBLY AND RE-ASSEMBLY

A. General

If the pump has been maintained and serviced properly, breakdowns which necessitate the pump being dis-assembled should not occur often.

1. If a problem occurs, the cause should be determined, if possible, before dis-assembling. (See "Problem Analysis")
2. If the pump is being dis-assembled, all parts must be carefully handled, avoid heavy blows and shocks.
3. All parts must be carefully cleaned and inspected for wear. Recondition or replace parts where necessary.

B. Dis-Assembly

1. Drain liquid from casing by removing drain plug.

Caution: Allow pump to cool and secure suction and discharge valves before working on pump!!

2. Remove re-circulation line.
3. Remove bolts holding cover/adapter to casing, pry cover/adapter and motor assembly from casing.
4. Remove impeller bolt in a counterclockwise direction. Remove impeller and key.
5. In all cases of mechanical seal arrangement, after removing the sleeve and its seal assembly, the seal rotating element may be drawn off the shaft sleeve. Note: Apply silicone grease on the OD of the sleeve in the area between the seal and the end of the sleeve. This will help removal of the old seal. The stationary element is to be removed from the cover.
6. All parts must be cleaned and inspected for wear. Replace parts where necessary.

C. Re-Assembly

1. Be certain that all parts to be replaced are free from burrs, with screw threads and connecting faces clear and free from damage.
2. Insert stationary element of seal into cover adapter, slip cover-adapter over shaft and engage rabbit of motor. **Note: Do not touch the seal surfaces because this may result in leakage. Do not contaminate seal faces with fingerprints.**
3. Lubricate smaller OD of shaft sleeve with silicone grease. **Do not use petroleum oil or grease.**
4. Place spring on shaft sleeve to abut against sleeve shoulder. Slide rotary seal on sleeve until it contacts spring.
5. Slide the shaft sleeve on the shaft, larger bore first. Be certain the O-ring is correctly seated in the groove.
6. Assemble impeller key and impeller on shaft. Refit with new impeller washer on impeller bolt and tighten carefully. Be certain that the impeller rotates freely by hand.
7. Apply a few spots of gasket adhesive to gasket surface of cover. Place a new casing gasket against gasket surface and press against adhesive.
8. Assemble cover-adapter complete with motor into casing. Insure that gasket is seated correctly. Install hex-headed cap screws into casing tapings and tighten uniformly.
9. Reconnect re-circulation line and drain plug.

APPLICATION

1. Working Pressure: 175 psig
   Optional Working Pressure: 300 psig
2. Temperature: 250°F Standard
   300°F Hi Temperature

CASING/IMPELLER WEAR RING CLEARANCES

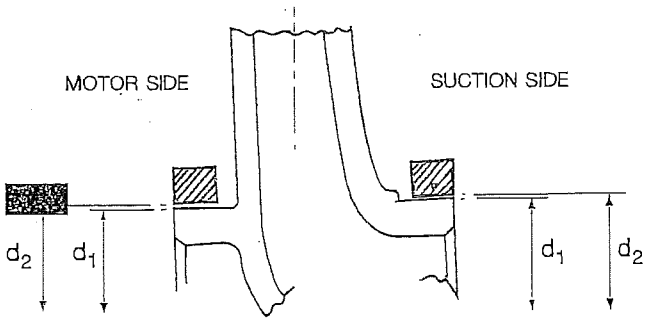

KV CASING/IMPELLER WEAR RING CLEARANCES

PUMP SIZE	WEAR RING-SUCTION SIDE				CLEARANCE	
	DIA d_1		DIA d_2			
	MAX	MIN	MAX	MIN	MAX	MIN
1506	2.363	2.361	2.377	2.375	.016	.012
1507	2.738	2.736	2.752	2.750	.016	.012
2006	2.863	2.861	2.877	2.875	.016	.012
2007	2.938	2.936	2.952	2.950	.016	.012
2009	3.363	3.361	3.377	3.375	.016	.012
2011	3.488	3.486	3.502	3.500	.016	.012
3006	3.238	3.236	3.252	3.250	.016	.012
3007	3.688	3.686	3.702	3.700	.016	.012
3009	3.613	3.611	3.627	3.625	.016	.012
3011	3.988	3.986	4.002	4.000	.016	.012
3013	3.738	3.736	3.752	3.750	.016	.012
4007	4.238	4.236	4.252	4.250	.016	.012
4009	4.611	4.609	4.627	4.625	.018	.014
4011	4.738	4.736	4.752	4.750	.016	.012
4013	4.613	4.611	4.627	4.625	.016	.012
5007	4.988	4.986	5.002	5.000	.016	.012
6009	5.861	5.859	5.877	5.875	.018	.014
6011	5.861	5.859	5.877	5.875	.018	.014
6013	5.861	5.859	5.877	5.875	.018	.014
8011	7.234	7.232	7.252	7.250	.020	.016
8013	7.734	7.732	7.752	7.750	.020	.016

OPTIONAL CASING WEAR RING FITTED TO SUCTION SIDE ONLY

Addendum to KV Installation, Operation & Maintenance Manual

THE FOLLOWING INSTRUCTIONS APPLY TO VERTICAL IN-LINE PUMPS UP THROUGH 10" FLANGE CONNECTIONS.

INSTALLATION

A1. Location

In open systems, locate the unit as close as practical to the liquid supply source, with a short, direct suction pipe. Ensure adequate space is left above and around the unit for operation, maintenance, service and inspection of parts.

In closed systems, where possible, the pumps should be installed immediately downstream of the expansion tank/make-up connection. This is the point of zero pressure change and is necessary for effective pump operation. Do not install more than one expansion tank connection into any closed hydronic system.

Electric motor driven pumps should not be located in damp or dusty location without special protection.

Airflow into the motor and/or motor fan should not be obstructed.

A2. Installation

In order to achieve the full added value of the Vertical In-Line pump design it is important that you ensure the pump is affixed to the system piping by the pump flanges and the pump and motor assembly is allowed to float freely with the expansion and contraction of the piping system. Should any vertical in-line pump use supports to the structure, **it is imperative that no pipe strain is imposed on the pump flanges.** Compliant mounts such as springs or "waffle" style isolation pads should be used under the pipe supports if the pump is not truly pipe mounted.

Various installation arrangements are detailed in Figures A1.1 through A1.12.

Vertical In-Line pumps may be installed directly in the system piping with no additional support. Pipe hangers are simply sized for the additional weight of the pumping unit. Many pumps are installed in this manner and are mounted at sufficient height to take zero floor space. (Figure A1.1)

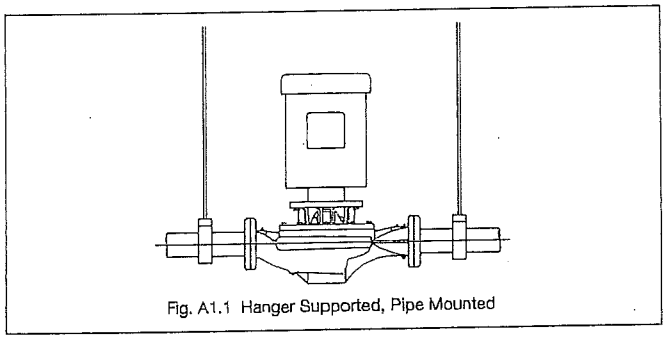

Fig. A1.1 Hanger Supported, Pipe Mounted

Piping for smaller in-line pumps (typically 15 hp and below) is hung close to the ceiling in many mechanical rooms. Larger pumps are often mounted near ground level for ease of maintenance. Figure A1.2 illustrates such an arrangement with the piping supported at the ceiling and the vertical pump installed with a Taco Suction Diffuser (RSP) and Plus Two Multi-Purpose Valve.

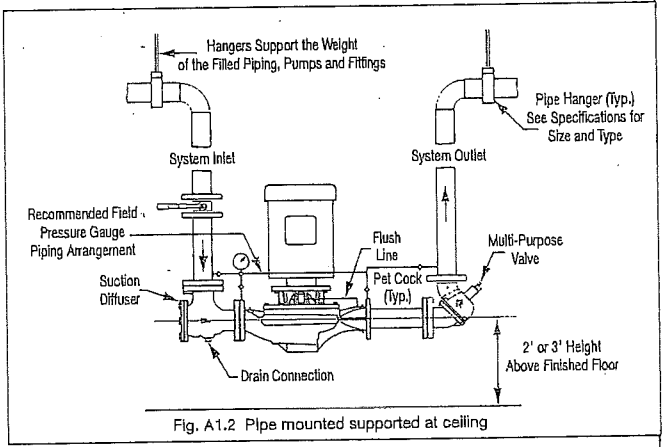

Fig. A1.2 Pipe mounted supported at ceiling

Should additional space saving be required the discharge spool piece and Plus Two Multi-Purpose Valve may be replaced by a long-radius elbow and the Plus Two Multi-Purpose Valve field converted to a straight pattern configuration and installed in the vertical discharge pipe. (Figure A1.3)

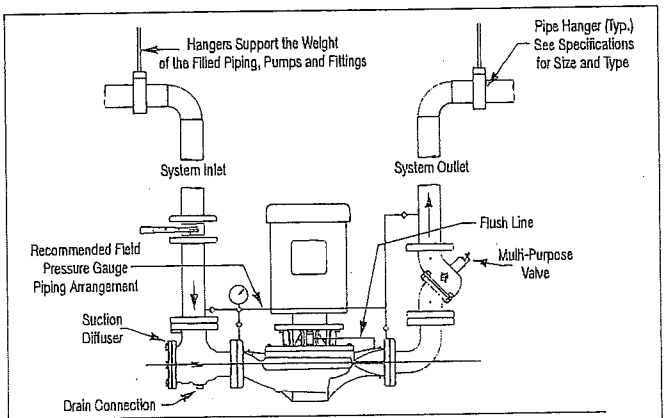

Fig. A1.3 Discharge elbow for minimum footprint

A similar arrangement to Figure A1.2 with additional floor mounted pipe-stools isolated from the structure by 'waffle' style isolation pads under the Suction Diffuser (RSP) and Plus Two Multi-Purpose Valve is illustrated in Figure A1.4.

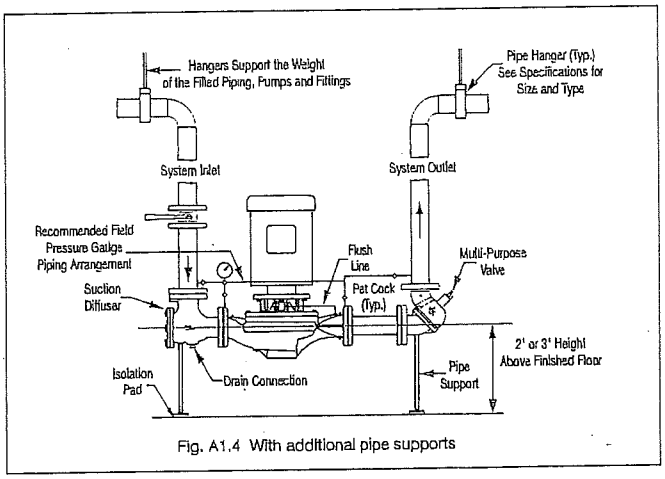

Fig. A1.4 With additional pipe supports

Floor mounted saddle supports (Figure A1.5) are typical for condenser water pumps where cooling tower base is near mechanical room elevation.

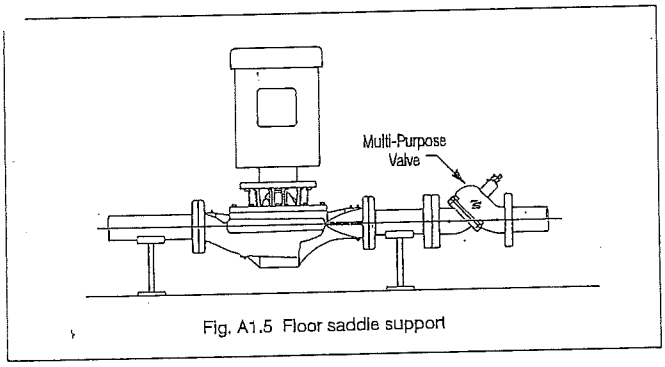

Fig. A1.5 Floor saddle support

Where required, additional floor support may be used as shown in Figure A1.6. Install a "waffle" isolation pad under the pump. **NOTE: The pump should not be rigidly attached to the base/pad structure.**

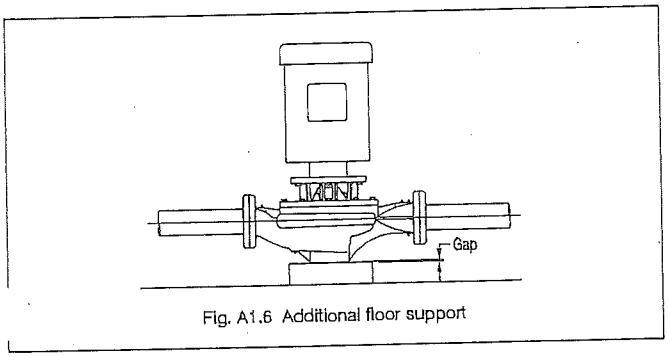

Fig. A1.6 Additional floor support

Stanchion plates at the pump suction and discharge ports may be supplied for installation convenience. Isolation pads must be used under the legs and monitored as pipe hangers are adjusted to ensure the pump flanges are not supporting the piping. Bolting to the floor or housekeeping pad is not recommended. If the stanchions are bolted down the bolts must be isolated from the stanchion or inertia base and flexible pipe connectors used (Figure A1.7).

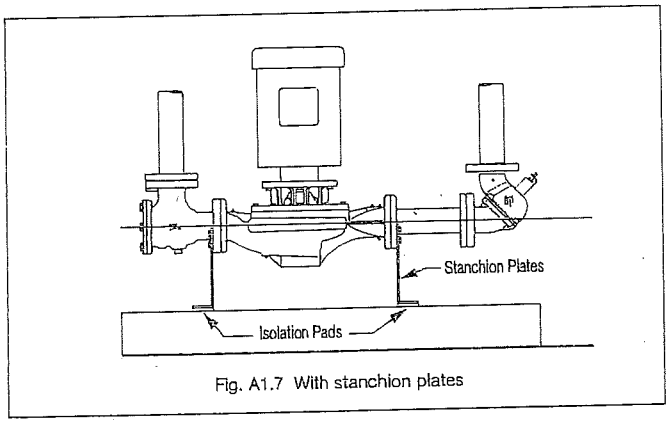

Fig. A1.7 With stanchion plates

An installation with stanchion plates for seismically active regions is illustrated in Figure A1.8. Seismically rated isolation pads or snubbers with bolts isolated from the stanchion plates are installed to restrain the pump during a seismic event. Pipe hangers carry the weight of the equipment as seismic components are designed only to restrain the equipment during a seismic event.

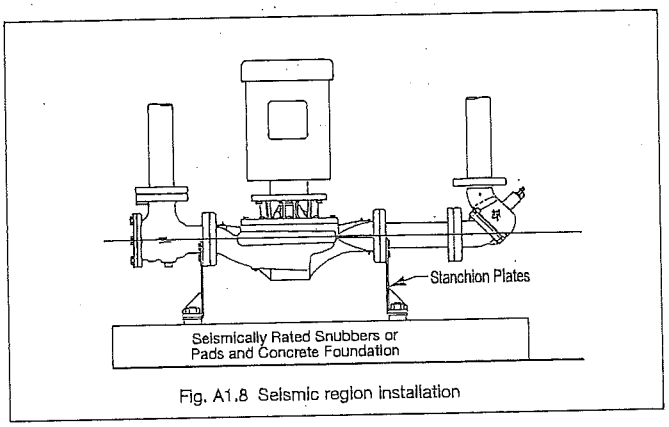

Fig. A1.8 Seismic region installation

Close coupled KV In-line pumps up to 15hp (254 frames) / 11kW may be installed with the shaft horizontal (Figure A1.9).

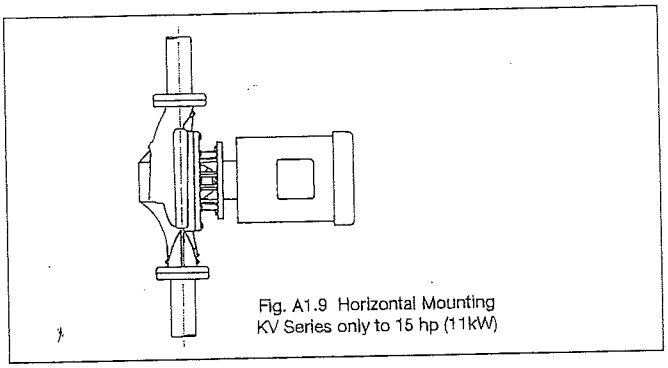

Fig. A1.9 Horizontal Mounting
KV Series only to 15 hp (11kW)

In systems utilizing grooved pipe, flange adapter locking devices or welded flanges at the pump should be used to prevent the possibility of pipe mounted pumps rotating in the piping (Figure A1.10).

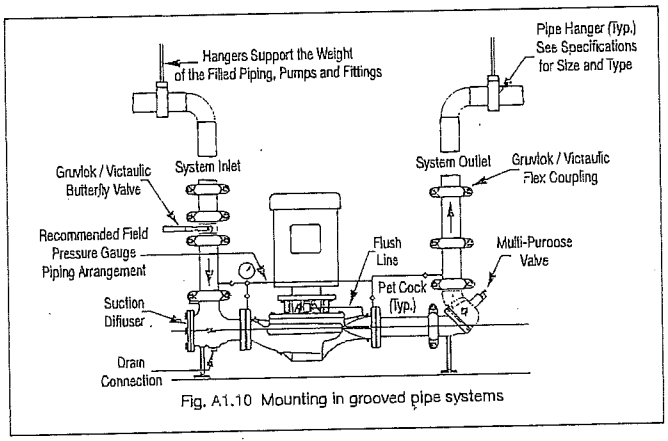

Fig. A1.10 Mounting in grooved pipe systems

DO NOT support the unit by the motor eye bolts (Figure A1.11) or by any other part of the motor.

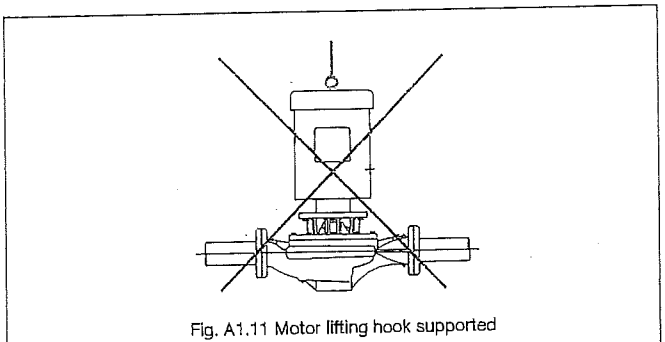

Fig. A1.11 Motor lifting hook supported

Connecting the pump to a permanent rigid base (Figure A1.12) is not recommended unless isolated from the piping by flexible connectors and the base isolated from the building structure on an inertia base. (Figure A1.12 is generally acceptable when using plastic piping.)

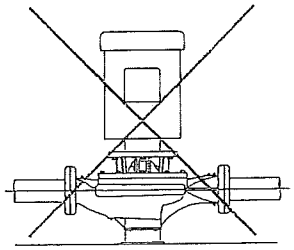

Fig. A1.12 Mounted on rigid base without flexible connectors

PUMP PIPING - GENERAL

NEVER connect any pump to piping, unless extra care is taken to measure and align the piping flanges well. Always start piping from pump. Use as few bends as possible and preferably long radius elbows.

Do not use flexible connectors on the suction or discharge of a vertical in-line pump, unless the pump is rigidly mounted to a foundation. Ensure piping exerts no strain on pump as this could distort the casing causing breakage or early failure due to pump misalignment. All connecting pipe flanges must be square to the pipe work and parallel to the pump flanges.

Suction and discharge pipes may be increased or decreased at pump nozzle to suit pump capacity and particular conditions of installation. Use eccentric reducers on suction connection with flat side uppermost.

Lay out the suction line with a continual rise towards the pump without high points, thus eliminating possibility of air pockets that may prevent the pump from operating effectively.

PROBLEM ANALYSIS

A. No Discharge
1. Pump not primed.
2. Speed too low.
3. System head too high.
4. Suction lift higher than pump is designed.
5. Impeller completely clogged.
6. Incorrect direction of rotation.
7. Air leak in suction line.

B. Insufficient Discharge Flow
1. Air leak in suction line.
2. Speed too low.
3. System head higher than anticipated.
4. Insufficient NPSH. Suction lift too high. Check gauges. Also check for clogged suction line or screen.
5. Impeller partially plugged.
6. Mechanical defects.
   a. Worn wear rings
   b. Impeller damaged.
   c. Incorrect direction of rotation.

C. Insufficient Discharge Pressure
1. Speed too low.
2. System head less than anticipated.
3. Air in system.
4. Mechanical defects.
   a. Worn wear rings.
   b. Impeller damaged.
   c. Impeller diameter too small.
   d. Incorrect direction of rotation.

. Loss of Suction
1. Leak in suction line.
2. Suction lift too high.
3. Insufficient NPSH.
4. Air in system.
5. Casing gasket defective.

E. Excessive Power Consumption
1. Speed too high.
2. System head lower than rating.
3. Specific gravity of liquid too high.
4. Mechanical defects.
   a. Shaft bent.
   b. Rotating elements bind.
   c. Worn wear ring.

F. Vibration
1. Air leak in suction line.
2. Air in system.
3. Impeller partially plugged.
4. Foundation not rigid.
5. Mechanical defects.
   a. Damaged impeller.
   b. Motor bearings worn.
   c. Rotor out of balance.
   d. Shaft bent.

G. Motor Runs Hot
1. Speed too high.
2. Specific gravity of liquid too high.
3. Mechanical defects.
   a. Shaft bent.
   b. Rotating elements bind.
   c. Defective motor.
   d. Voltage lower than rating.

LIMITED WARRANTY STATEMENT

Taco, Inc. will repair or replace without charge (at the company's option) any commercial pump product or part which is proven defective under normal use within one (1) year from the date of start-up or one (1) year and six (6) months from date of shipment (whichever occurs first).

Motors provided on commercial pumps are not covered by this warranty, and are warranted by the motor manufacturer. For complete details on motor warranty returns, the purchaser should contact the motor manufacturer's local service repair center or contact the motor manufacturer directly.

Seals provided on commercial pumps are not covered by this warranty.

In order to obtain service under this warranty, it is the responsibility of the purchaser to promptly notify the local Taco stocking distributor or Taco in writing and promptly deliver the subject product or part, delivery prepaid, to the stocking distributor. For assistance on warranty returns, the purchaser may either contact the local Taco stocking distributor or Taco. If the subject product or part contains no defect as covered in this warranty, the purchaser will be billed for parts and labor charges in effect at time of factory examination and repair.

Any Taco product or part not installed or operated in conformity with Taco instructions or which has been subject to misuse, misapplication, the addition of petroleum-based fluids or certain chemical additives to the systems, or other abuse, will not be covered by this warranty.

If in doubt as to whether a particular substance is suitable for use with a Taco product or part, or for any application restrictions, consult the applicable Taco instruction sheets or contact Taco at [401-942-8000].

Taco reserves the right to provide replacement products and parts which are substantially similar in design and functionally equivalent to the defective product or part. Taco reserves the right to make changes in details of design, construction, or arrangement of materials of its products without notification.

TACO OFFERS THIS WARRANTY IN LIEU OF ALL OTHER EXPRESS WARRANTIES. ANY WARRANTY IMPLIED BY LAW INCLUDING WARRANTIES OF MERCHANTABILITY OR FITNESS IS IN EFFECT ONLY FOR THE DURATION OF THE EXPRESS WARRANTY SET FORTH IN THE FIRST PARAGRAPH ABOVE.

THE ABOVE WARRANTIES ARE IN LIEU OF ALL OTHER WARRANTIES, EXPRESS OR STATUTORY, OR ANY OTHER WARRANTY OBLIGATION ON THE PART OF TACO.

TACO WILL NOT BE LIABLE FOR ANY SPECIAL, INCIDENTAL, INDIRECT OR CONSEQUENTIAL DAMAGES RESULTING FROM THE USE OF ITS PRODUCTS OR ANY INCIDENTAL COSTS OF REMOVING OR REPLACING DEFECTIVE PRODUCTS.

This warranty gives the purchaser specific rights, and the purchaser may have other rights which vary from state to state. Some states do not allow limitations on how long an implied warranty lasts or on the exclusion of incidental or consequential damages, so these limitations or exclusions may not apply to you.

Do it Once. Do it Right.®

TACO, INC., 1160 Cranston Street, Cranston, RI 02920 Telephone: (401) 942-8000 FAX: (401) 942-2360.
TACO (Canada), Ltd., 8450 Lawson Road, Unit #3, Milton, Ontario L9T 0J8. Telephone: 905/564-9422. FAX: 905/564-9436.
Visit our web site at: http://www.taco-hvac.com

Printed in USA
Copyright 2010 TACO, Inc.

KV 4009 P-10.01, P-10.02

KV Vertical In-Line Pump

302-031

Installation, Operation & Maintenance Manual

SUPERSEDES: 302-031 May 1, 2010 EFFECTIVE: July 1, 2010

Plant ID No. 001-1013

INSTALLATION

SAFETY REQUIREMENTS

1. **IMPORTANT!** These instructions should be read completely prior to installation of the equipment. A copy of these instructions should be retained on file for future reference.
2. This pump is intended for the circulation of water or other suitable HVAC media. It is not intended for hazardous, corrosive, or flammable liquids.
3. Pump must not be operated until all piping and/or electrical connections are in place.
4. Proper care and suitable equipment should be used to move and install this heavy equipment.
5. Care should be taken when installing pipe systems to avoid placing an excessive load on the pump unions.
6. Refer to motor installation instructions to determine proper terminal connections in order to obtain correct pump rotation.
7. When the system piping is used as an earth bonding path for the building electrical services (check local codes), the pump should not be relied upon as part of the circuit. A properly installed bridging connection should be provided.
8. If electrical connection is to be made using any means other than rigid conduit, proper strain relief must be provided (min 100N tension).
9. Pump should be installed according to local electrical and safety codes using appropriate size wire and suitable over current protection. It should use a lockable isolator or circuit breaker conforming to applicable electrical codes.
10. It is recommended that the pump be fitted with a suitable "emergency stop" per the requirements of applicable electrical codes.

A. Receiving Pump

1. Inspect for shipping damage. If a shortage or damage occurs, contact carrier immediately.

B. Location

1. Install vertically with motor up. Consult factory for horizontal mounting.
2. Pump should be accessible for inspection and repair work, head room must be provided for the use of hoist or tackle as necessary.
3. Lift pump by slinging through motor eye bolts and securing through pump adapter.
4. **In no case should any part of motor be covered with insulation.**

C. Foundation

1. The pump must always be supported.
2. Pumps with smaller motors may be suspended in the piping, provided the piping is supported adjacent to the pump.
3. For pumps with larger motors, the pump should be attached to a support utilizing the tapped hole or holes in the bottom of the pump casing. **Note: Piping loads shall not be applied to the pump.**
4. Pump must be allowed to move with piping movement. Expansion of piping must be taken into account when piping and suitable devices should be employed. Do not rigidly connect the pump to the floor. **Note: Provide vibration isolation pads under floor mounted supports. Do not support unit by the motor eye-bolts.**

OPERATION

A. Before operating for the first time check the following:

1. Is motor correctly wired for voltage available.
2. Has pump been primed. Pump should never be run dry. **Extra effort may be required to get the air out of the seal chamber.**

> **Caution: Make sure power supply to pump motor is locked out before touching motor shaft.**

3. All rotating parts turn freely.

B. Starting pump

1. Jog pump to check proper rotation.
2. Start pump with discharge valve closed.

> **DANGER: MAKE SURE SUCTION VALVE IS OPEN!!**

3. When correct pressure has been reached, open discharge valve slowly.
4. **Do not operate pump for prolonged periods with discharge valve closed, so as to avoid overheating and potential damaging loads.**

5. Pump should be stopped if any of the following occur:
   a. No discharge.
   b. Insufficient discharge.
   c. Insufficient pressure.
   d. Loss of suction.
   e. Excessive power consumption.
   f. Vibration.

Check problem analysis further in the manual for help in troubleshooting.

MAINTENANCE

A. Routine Inspections

Routine inspections should be made on a regular basis. Inspections made while pump is running should reveal potential failures.

1. Inspect motor bearings for any sign of temperature rise. Temperature should not exceed 160°F. Temperature rise may indicate the early stages of bearing problems.
2. Listen for any unusual noise.
   a. Air trapped in pump
   b. Hydraulic noise.
   c. Mechanical noise in motor and/or pump.
3. Check suction gauge reading and confirm that it is normal.
4. Check discharge gauge reading, and confirm that it is normal. If gauge readings are abnormal find out why.

ote: Suction and discharge gauges should read the same with pump stopped.

B. Close Coupled Pumps

The pump section is attached directly to the motor shaft and does not contain bearings.

C. Close Coupled Motors

The motor must be lubricated in accordance with the manufacturer's recommendations. **Do not over lubricate the motor bearings as this could cause premature bearing failure.**

D. Mechanical Seal

The mechanical seal is the "John Crane" Type 21 General Purpose Seal for the 175 psig pressure rating.

A "John Crane" Type 2 General Purpose Seal is used for the 300 psig pressure rating.

DIS-ASSEMBLY AND RE-ASSEMBLY

A. General

If the pump has been maintained and serviced properly, breakdowns which necessitate the pump being dis-assembled should not occur often.

1. If a problem occurs, the cause should be determined, if possible, before dis-assembling. (See "Problem Analysis")
2. If the pump is being dis-assembled, all parts must be carefully handled, avoid heavy blows and shocks.
3. All parts must be carefully cleaned and inspected for wear. Recondition or replace parts where necessary.

B. Dis-Assembly

1. Drain liquid from casing by removing drain plug.

> **Caution: Allow pump to cool and secure suction and discharge valves before working on pump!!**

2. Remove re-circulation line.
3. Remove bolts holding cover/adapter to casing, pry cover/adapter and motor assembly from casing.
4. Remove impeller bolt in a counterclockwise direction. Remove impeller and key.
5. In all cases of mechanical seal arrangement, after removing the sleeve and its seal assembly, the seal rotating element may be drawn off the shaft sleeve. Note: Apply silicone grease on the OD of the sleeve in the area between the seal and the end of the sleeve. This will help removal of the old seal. The stationary element is to be removed from the cover.
6. All parts must be cleaned and inspected for wear. Replace parts where necessary.

C. Re-Assembly

1. Be certain that all parts to be replaced are free from burrs, with screw threads and connecting faces clear and free from damage.
2. Insert stationary element of seal into cover adapter, slip cover-adapter over shaft and engage rabbit of motor. **Note: Do not touch the seal surfaces because this may result in leakage. Do not contaminate seal faces with fingerprints.**
3. Lubricate smaller OD of shaft sleeve with silicone grease. **Do not use petroleum oil or grease.**
4. Place spring on shaft sleeve to abut against sleeve shoulder. Slide rotary seal on sleeve until it contacts spring.
5. Slide the shaft sleeve on the shaft, larger bore first. Be certain the O-ring is correctly seated in the groove.
6. Assemble impeller key and impeller on shaft. Refit with new impeller washer on impeller bolt and tighten carefully. Be certain that the impeller rotates freely by hand.
7. Apply a few spots of gasket adhesive to gasket surface of cover. Place a new casing gasket against gasket surface and press against adhesive.
8. Assemble cover-adapter complete with motor into casing. Insure that gasket is seated correctly. Install hex-headed cap screws into casing tapings and tighten uniformly.
9. Reconnect re-circulation line and drain plug.

APPLICATION

1. Working Pressure: 175 psig
   Optional Working Pressure: 300 psig
2. Temperature: 250°F Standard
   300°F Hi Temperature

CASING/IMPELLER WEAR RING CLEARANCES

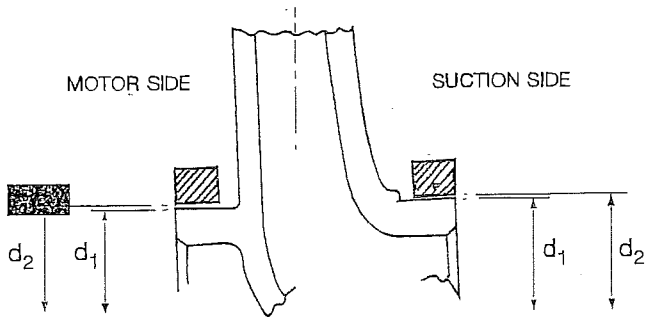

KV CASING/IMPELLER WEAR RING CLEARANCES

PUMP SIZE	WEAR RING-SUCTION SIDE				CLEARANCE	
	DIA d_1		DIA d_2			
	MAX	MIN	MAX	MIN	MAX	MIN
1506	2.363	2.361	2.377	2.375	.016	.012
1507	2.738	2.736	2.752	2.750	.016	.012
2006	2.863	2.861	2.877	2.875	.016	.012
2007	2.938	2.936	2.952	2.950	.016	.012
2009	3.363	3.361	3.377	3.375	.016	.012
2011	3.488	3.486	3.502	3.500	.016	.012
3006	3.238	3.236	3.252	3.250	.016	.012
3007	3.688	3.686	3.702	3.700	.016	.012
3009	3.613	3.611	3.627	3.625	.016	.012
3011	3.988	3.986	4.002	4.000	.016	.012
3013	3.738	3.736	3.752	3.750	.016	.012
4007	4.238	4.236	4.252	4.250	.016	.012
4009	4.611	4.609	4.627	4.625	.018	.014
4011	4.738	4.736	4.752	4.750	.016	.012
4013	4.613	4.611	4.627	4.625	.016	.012
5007	4.988	4.986	5.002	5.000	.016	.012
6009	5.861	5.859	5.877	5.875	.018	.014
6011	5.861	5.859	5.877	5.875	.018	.014
6013	5.861	5.859	5.877	5.875	.018	.014
8011	7.234	7.232	7.252	7.250	.020	.016
8013	7.734	7.732	7.752	7.750	.020	.016

OPTIONAL CASING WEAR RING FITTED TO SUCTION SIDE ONLY

Addendum to KV Installation, Operation & Maintenance Manual

THE FOLLOWING INSTRUCTIONS APPLY TO VERTICAL IN-LINE PUMPS UP THROUGH 10" FLANGE CONNECTIONS.

INSTALLATION

A1. Location

In open systems, locate the unit as close as practical to the liquid supply source, with a short, direct suction pipe. Ensure adequate space is left above and around the unit for operation, maintenance, service and inspection of parts.

In closed systems, where possible, the pumps should be installed immediately downstream of the expansion tank/make-up connection. This is the point of zero pressure change and is necessary for effective pump operation. Do not install more than one expansion tank connection into any closed hydronic system.

Electric motor driven pumps should not be located in damp or dusty location without special protection.

Airflow into the motor and/or motor fan should not be obstructed.

A2. Installation

In order to achieve the full added value of the Vertical In-Line pump design it is important that you ensure the pump is affixed to the system piping by the pump flanges and the pump and motor assembly is allowed to float freely with the expansion and contraction of the piping system. Should any vertical in-line pump use supports to the structure, **it is imperative that no pipe strain is imposed on the pump flanges.** Compliant mounts such as springs or "waffle" style isolation pads should be used under the pipe supports if the pump is not truly pipe mounted.

Various installation arrangements are detailed in Figures A1.1 through A1.12.

Vertical In-Line pumps may be installed directly in the system piping with no additional support. Pipe hangers are simply sized for the additional weight of the pumping unit. Many pumps are installed in this manner and are mounted at sufficient height to take zero floor space. (Figure A1.1)

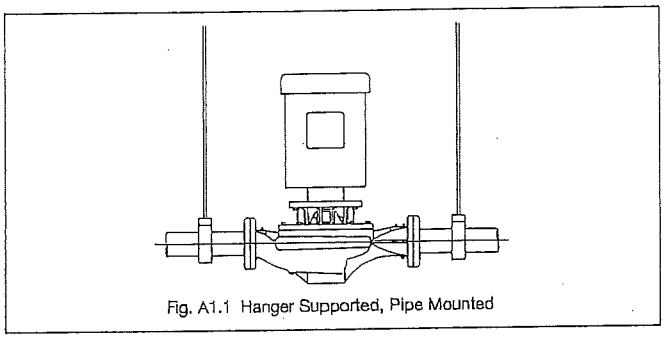

Fig. A1.1 Hanger Supported, Pipe Mounted

Piping for smaller in-line pumps (typically 15 hp and below) is hung close to the ceiling in many mechanical rooms. Larger pumps are often mounted near ground level for ease of maintenance. Figure A1.2 illustrates such an arrangement with the piping supported at the ceiling and the vertical pump installed with a Taco Suction Diffuser (RSP) and Plus Two Multi-Purpose Valve.

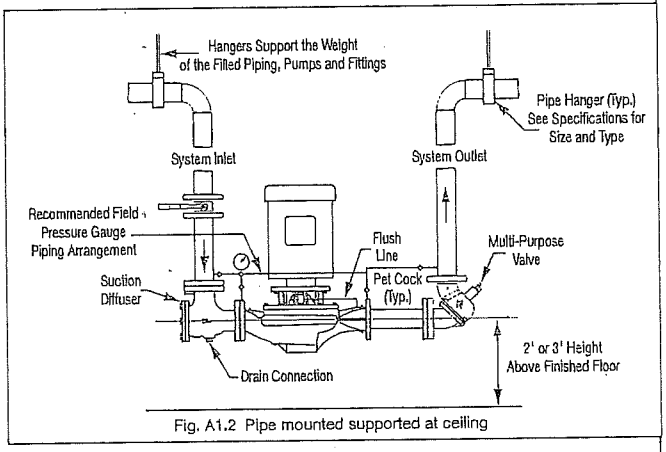

Fig. A1.2 Pipe mounted supported at ceiling

Should additional space saving be required the discharge spool piece and Plus Two Multi-Purpose Valve may be replaced by a long-radius elbow and the Plus Two Multi-Purpose Valve field converted to a straight pattern configuration and installed in the vertical discharge pipe. (Figure A1.3)

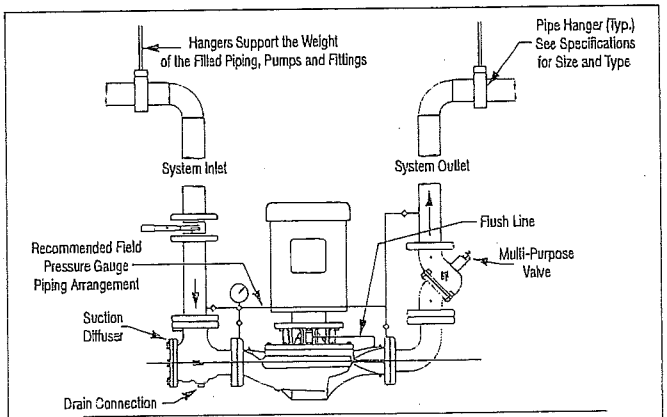

Fig. A1.3 Discharge elbow for minimum footprint

A similar arrangement to Figure A1.2 with additional floor mounted pipe-stools isolated from the structure by 'waffle' style isolation pads under the Suction Diffuser (RSP) and Plus Two Multi-Purpose Valve is illustrated in Figure A1.4.

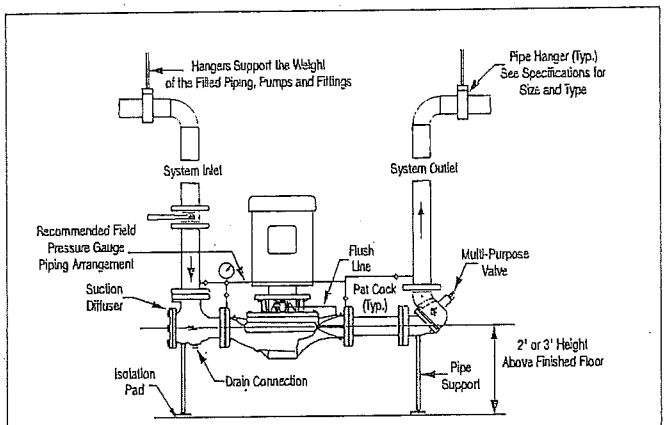

Fig. A1.4 With additional pipe supports

Floor mounted saddle supports (Figure A1.5) are typical for condenser water pumps where cooling tower base is ;ar mechanical room elevation.

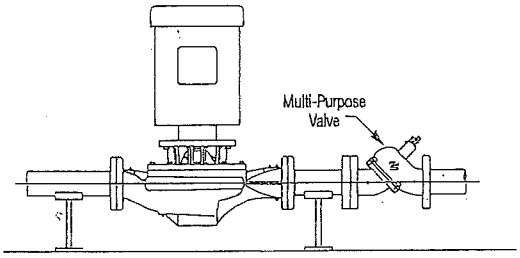

Fig. A1.5 Floor saddle support

Where required, additional floor support may be used as shown in Figure A1.6. Install a "waffle" isolation pad under the pump. **NOTE: The pump should not be rigidly attached to the base/pad structure.**

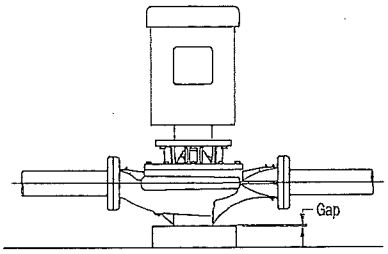

Fig. A1.6 Additional floor support

Stanchion plates at the pump suction and discharge ports may be supplied for installation convenience. Isolation pads must be used under the legs and monitored as pipe hangers are adjusted to ensure the pump flanges are not supporting the piping. Bolting to the floor or housekeeping pad is not recommended. If the stanchions are bolted down the bolts must be isolated from the stanchion or inertia base and flexible pipe connectors used (Figure A1.7).

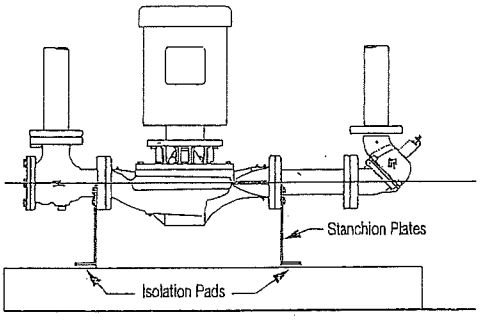

Fig. A1.7 With stanchion plates

An installation with stanchion plates for seismically active regions is illustrated in Figure A1.8. Seismically rated isolation pads or snubbers with bolts isolated from the stanchion plates are installed to restrain the pump during a seismic event. Pipe hangers carry the weight of the equipment as seismic components are designed only to restrain the equipment during a seismic event.

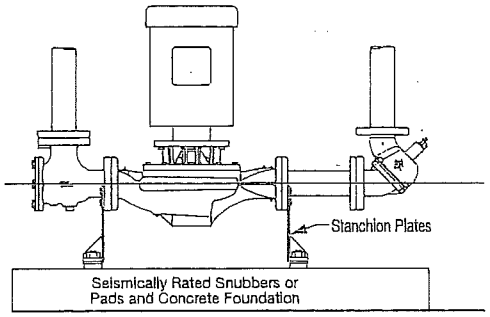

Fig. A1.8 Seismic region installation

Close coupled KV In-line pumps up to 15hp (254 frames) / 11kW may be installed with the shaft horizontal (Figure A1.9).

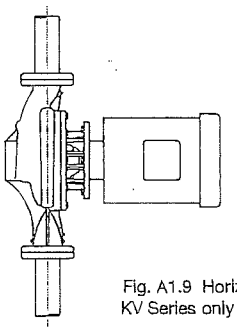

Fig. A1.9 Horizontal Mounting
KV Series only to 15 hp (11kW)

In systems utilizing grooved pipe, flange adapter locking devices or welded flanges at the pump should be used to prevent the possibility of pipe mounted pumps rotating in the piping (Figure A1.10).

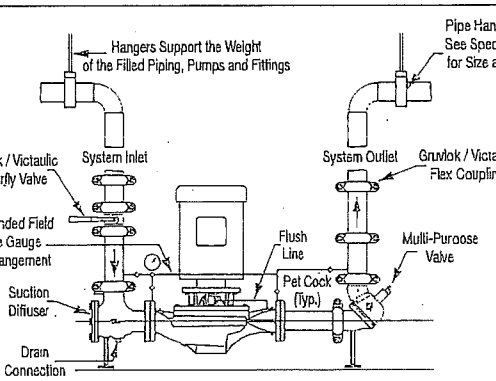

Fig. A1.10 Mounting in grooved pipe systems

DO NOT support the unit by the motor eye bolts (Figure A1.11) or by any other part of the motor.

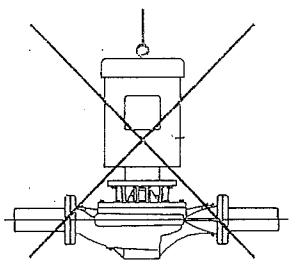

Fig. A1.11 Motor lifting hook supported

Connecting the pump to a permanent rigid base (Figure A1.12) is not recommended unless isolated from the piping by flexible connectors and the base isolated from the building structure on an inertia base. (Figure A1.12 is generally acceptable when using plastic piping.)

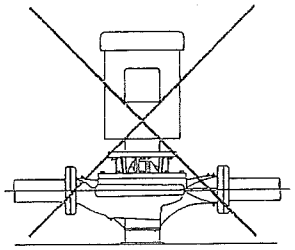

Fig. A1.12 Mounted on rigid base without flexible connectors

PUMP PIPING - GENERAL

NEVER connect any pump to piping, unless extra care is taken to measure and align the piping flanges well. Always start piping from pump. Use as few bends as possible and preferably long radius elbows.

Do not use flexible connectors on the suction or discharge of a vertical in-line pump, unless the pump is rigidly mounted to a foundation. Ensure piping exerts no strain on pump as this could distort the casing causing breakage or early failure due to pump misalignment. All connecting pipe flanges must be square to the pipe work and parallel to the pump flanges.

Suction and discharge pipes may be increased or decreased at pump nozzle to suit pump capacity and particular conditions of installation. Use eccentric reducers on suction connection with flat side uppermost.

Lay out the suction line with a continual rise towards the pump without high points, thus eliminating possibility of air pockets that may prevent the pump from operating effectively.

PROBLEM ANALYSIS

A. No Discharge
1. Pump not primed.
2. Speed too low.
3. System head too high.
4. Suction lift higher than pump is designed.
5. Impeller completely clogged.
6. Incorrect direction of rotation.
7. Air leak in suction line.

B. Insufficient Discharge Flow
1. Air leak in suction line.
2. Speed too low.
3. System head higher than anticipated.
4. Insufficient NPSH. Suction lift too high. Check gauges. Also check for clogged suction line or screen.
5. Impeller partially plugged.
6. Mechanical defects.
   a. Worn wear rings
   b. Impeller damaged.
   c. Incorrect direction of rotation.

C. Insufficient Discharge Pressure
1. Speed too low.
2. System head less than anticipated.
3. Air in system.
4. Mechanical defects.
   a. Worn wear rings.
   b. Impeller damaged.
   c. Impeller diameter too small.
   d. Incorrect direction of rotation.

D. Loss of Suction
1. Leak in suction line.
2. Suction lift too high.
3. Insufficient NPSH.
4. Air in system.
5. Casing gasket defective.

E. Excessive Power Consumption
1. Speed too high.
2. System head lower than rating.
3. Specific gravity of liquid too high.
4. Mechanical defects.
   a. Shaft bent.
   b. Rotating elements bind.
   c. Worn wear ring.

F. Vibration
1. Air leak in suction line.
2. Air in system.
3. Impeller partially plugged.
4. Foundation not rigid.
5. Mechanical defects.
   a. Damaged impeller.
   b. Motor bearings worn.
   c. Rotor out of balance.
   d. Shaft bent.

G. Motor Runs Hot
1. Speed too high.
2. Specific gravity of liquid too high.
3. Mechanical defects.
   a. Shaft bent.
   b. Rotating elements bind.
   c. Defective motor.
   d. Voltage lower than rating.

LIMITED WARRANTY STATEMENT

Taco, Inc. will repair or replace without charge (at the company's option) any commercial pump product or part which is proven defective under normal use within one (1) year from the date of start-up or one (1) year and six (6) months from date of shipment (whichever occurs first).

Motors provided on commercial pumps are not covered by this warranty, and are warranted by the motor manufacturer. For complete details on motor warranty returns, the purchaser should contact the motor manufacturer's local service repair center or contact the motor manufacturer directly.

Seals provided on commercial pumps are not covered by this warranty.

In order to obtain service under this warranty, it is the responsibility of the purchaser to promptly notify the local Taco stocking distributor or Taco in writing and promptly deliver the subject product or part, delivery prepaid, to the stocking distributor. For assistance on warranty returns, the purchaser may either contact the local Taco stocking distributor or Taco. If the subject product or part contains no defect as covered in this warranty, the purchaser will be billed for parts and labor charges in effect at time of factory examination and repair.

Any Taco product or part not installed or operated in conformity with Taco instructions or which has been subject to misuse, misapplication, the addition of petroleum-based fluids or certain chemical additives to the systems, or other abuse, will not be covered by this warranty.

If in doubt as to whether a particular substance is suitable for use with a Taco product or part, or for any application restrictions, consult the applicable Taco instruction sheets or contact Taco at [401-942-8000].

Taco reserves the right to provide replacement products and parts which are substantially similar in design and functionally equivalent to the defective product or part. Taco reserves the right to make changes in details of design, construction, or arrangement of materials of its products without notification.

TACO OFFERS THIS WARRANTY IN LIEU OF ALL OTHER EXPRESS WARRANTIES. ANY WARRANTY IMPLIED BY LAW INCLUDING WARRANTIES OF MERCHANTABILITY OR FITNESS IS IN EFFECT ONLY FOR THE DURATION OF THE EXPRESS WARRANTY SET FORTH IN THE FIRST PARAGRAPH ABOVE.

THE ABOVE WARRANTIES ARE IN LIEU OF ALL OTHER WARRANTIES, EXPRESS OR STATUTORY, OR ANY OTHER WARRANTY OBLIGATION ON THE PART OF TACO.

TACO WILL NOT BE LIABLE FOR ANY SPECIAL, INCIDENTAL, INDIRECT OR CONSEQUENTIAL DAMAGES RESULTING FROM THE USE OF ITS PRODUCTS OR ANY INCIDENTAL COSTS OF REMOVING OR REPLACING DEFECTIVE PRODUCTS.

This warranty gives the purchaser specific rights, and the purchaser may have other rights which vary from state to state. Some states do not allow limitations on how long an implied warranty lasts or on the exclusion of incidental or consequential damages, so these limitations or exclusions may not apply to you.

Do it Once. Do it Right.®

TACO, INC., 1160 Cranston Street, Cranston, RI 02920 Telephone: (401) 942-8000 FAX: (401) 942-2360.
TACO (Canada), Ltd., 8450 Lawson Road, Unit #3, Milton, Ontario L9T 0J8. Telephone: 905/564-9422. FAX: 905/564-9436.
Visit our web site at: http://www.taco-hvac.com

Printed in USA
Copyright 2010 TACO, Inc.

Tag: AHU-3A / ACCU-3A

Specification: 15741

Manufacture: Trane Split system AHU

Drawing reference: M203

Location: B2 Ramp Level

TRANE SPLIT SYSTSEM AC UNITS

REP: TRANE

PHONE: 973-887-8800

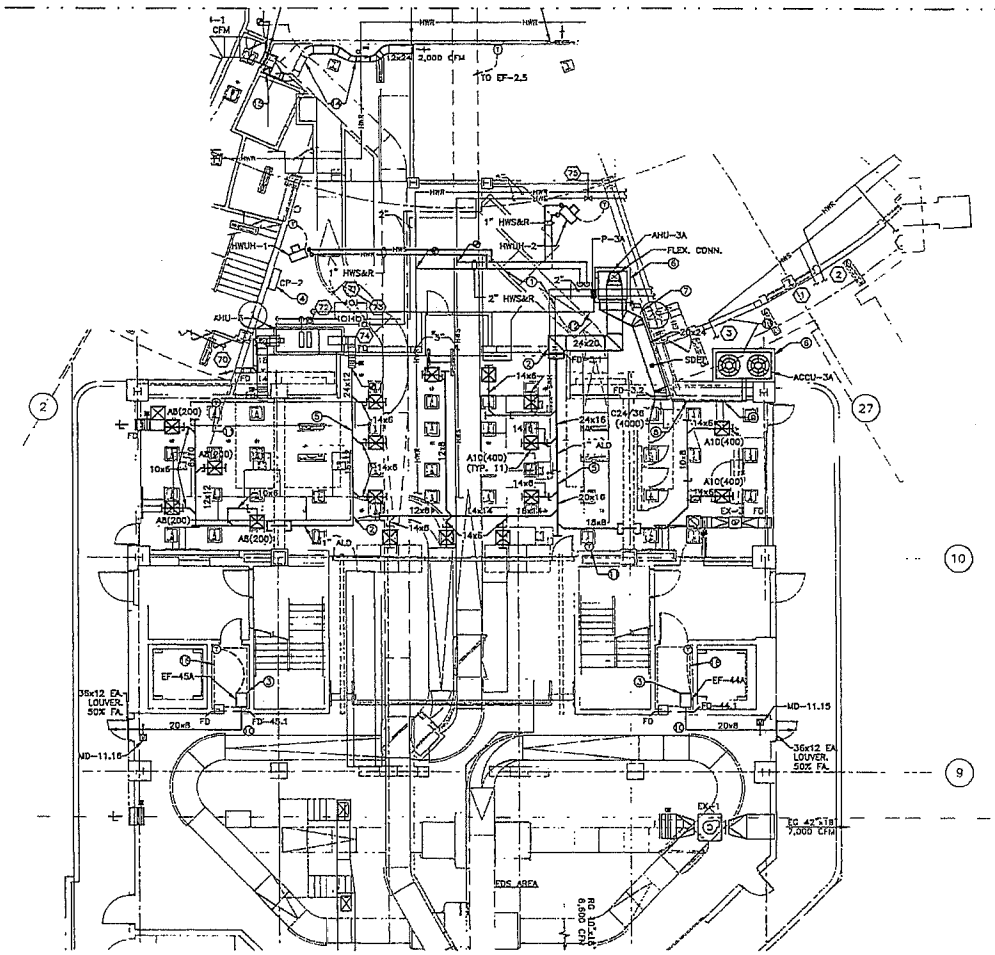

RAMP LEVEL PART PLAN III
SATELLITE B2 - INSTALLATION
P1 / M203
0 8 16
SCALE IN FEET

KEY NOTES:

1. FURNISH AND INSTALL INSULATION ON 5" HWS&R MAIN SUPPLY LINES AND 1" AND 2" HWS&R BRANCH LINES PER SPECIFICATIONS.
2. FURNISH AND INSTALL 1-1/2" HARD BOARD INSULATION ON PORTION OF DUCTWORK INSIDE MECHANICAL ROOM.
3. FURNISH AND INSTALL EXHAUST FANS AND SUPPORTS, COORDINATE WITH ELECTRICAL DRAWINGS FOR POWER AND CONTROL WIRING.
4. FURNISH AND INSTALL ALL NECESSARY CONTROL WIRING, ACCESSORIES AND ADDITIONAL CONTROL MODULES IN CP-2 ENCLOSURE AS REQUIRED TO CONTROL AHU-3A AND ACCU-3A VIA BUILDING MANAGEMENT SYSTEM.
5. FURNISH AND INSTALL ASSOCIATED DUCTWORK, INSULATION, SUPPORTS, ETC.
6. FURNISH AND INSTALL 4" HIGH CONCRETE HOUSEKEEPING PAD UNDER HVAC EQUIPMENT.
7. SUCTION & LIQUID REFRIGERANT LINES RUN STACKED ALONG WALL.
8. REFRIGERANT LINES SIZED PER MANUFACTURER'S RECOMMENDATIONS. INSULATE BOTH LINES.
9. RUN REFRIGERANT PIPING ABOVE CEILING IN PLENUM WITHIN ETD AREA.
10. FURNISH AND INSTALL EXHAUST FANS AND SUPPORTS, COORDINATE WITH ELECTRICAL DRAWINGS FOR POWER AND CONTROL WIRING. EXISTING FIRE SHUTTER DOOR FUSIBLE LINKAGE ASSEMBLY SHALL BE TEMPORARILY REMOVED FROM EXHAUST FAN AIRSTREAM FOR DUCTWORK INSTALLATION, THEN REPLACED SO THAT THE FUSIBLE LINK IS MOUNTED WITHIN THE EXHAUST DUCT AIRSTREAM VIA 2 HOLES ON BOTH SIDES OF THE DUCT AND CAN FREELY RELEASE AND TRIGGER THE FIRE SHUTTER IN CASE OF FIRE. FURNISH AND INSTALL NON-BINDING SLEEVES AT THE DUCT HOLES TO ALLOW FOR FUSIBLE LINKAGE AND CHAIN TO OPERATE FREELY IN CASE OF LINKAGE RELEASE.
11. FURNISH AND INSTALL WALL MOUNTED THERMOSTAT WITH LOCKABLE BOX. COORDINATE WITH ELECTRICAL DRAWINGS FOR POWER AND CONTROL WIRING.
12. FURNISH AND INSTALL 3/4" CONDENSATE DRAIN LINE AND PIPE TO FLOOR DRAIN AS SHOWN.
13. INSTALLATION OF ACCU-3 MUST BE COORDINATED SUCH THAT IT OCCURS ONLY AFTER ALL DEMOLITION WORK OF THE TEMPORARY SUPPLY AIR PLENUM, SHOWN ON DRAWING M111, IS COMPLETED.
14. 12x24 EXHAUST DUCT DN. TO HORIZONTAL RUN BENEATH CONVEYOR. RUN EXHAUST DUCT BENEATH CONVEYOR, MAINTAINING MIN. 12" CLEARANCE.
15. RUN 24x12 EXH. DUCT UP TO THE LEVEL OF EXISTING EXHAUST DUCT ON OTHER SIDE OF WALL. CONNECT NEW DUCTWORK TO EXISTING EXHAUST DUCT.
16. FURNISH AND INSTALL GALVANIZED STEEL DRAIN PAN IN EWR IN LOCATIONS BELOW ANY PIPING.

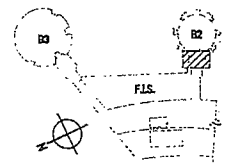

KEY PLAN (RAMP LEVEL)
NTS

Sheet 25 of 183

THE PORT AUTHORITY OF NY & NJ

R.G. VANDERWEIL ENGINEERS, LLP

VAL LEVIN
N.J. Professional Engineer # 24GE04079600

No.	Date	Revision	Approved

ENGINEERING DEPARTMENT

NEWARK LIBERTY INTERNATIONAL AIRPORT

MECHANICAL HVAC
Title

TERMINAL B
REHABILITATION OF SATELLITE B-2
MECHANICAL AND ELECTRICAL SYSTEMS

RAMP LEVEL PART PLAN III SATELLITE B2 CONNECTOR INSTALLATION

This drawing subject to restriction in accordance with Section 1 and 2 of the General Conditions of Public Contract, and may only be used for the purpose authorized by the Port Authority.

All materials of Contract documents, including Addenda and those who do and will print photomechanical and reproduction and electronic and those copies of all of the Contract documents or parts thereof, shall make every effort to maximize the use of recycled products and use recycling procedures on the printing and reproduction process. Addenda shall be printed on recycled paper. Upon completion of the Contract, unused sets of printed documents and electronic media shall be returned to the Port Authority or destroyed (whichever is directed by the Authority). Printing and electronic media shall be destroyed by shredding and recycling. Certification that the printed and electronic media has been destroyed and recycled shall be submitted to the Port Authority. Failure to comply with these requirements may result in withholding of payment to the Contractor.

Any reproduction of these drawings or specifications, or any portion thereof, and the preparation of any derivative drawings based on these drawings or specifications, without the written permission of the Port Authority of New York and New Jersey is prohibited. The Port Authority of New York and New Jersey retains all common law, statutory and other reserved rights, including the copyright thereto.

J. DUMORNE	J. DUMORNE	S. CEONTOS
Designed by	Drawn by	Checked by

Date 05/12/2010

Contract Number EWR-154.081

Drawing Number M203

PID# 08353000

G27508

Installation Operation Maintenance

Split System Air Handlers

5-20 Tons (R-410A)

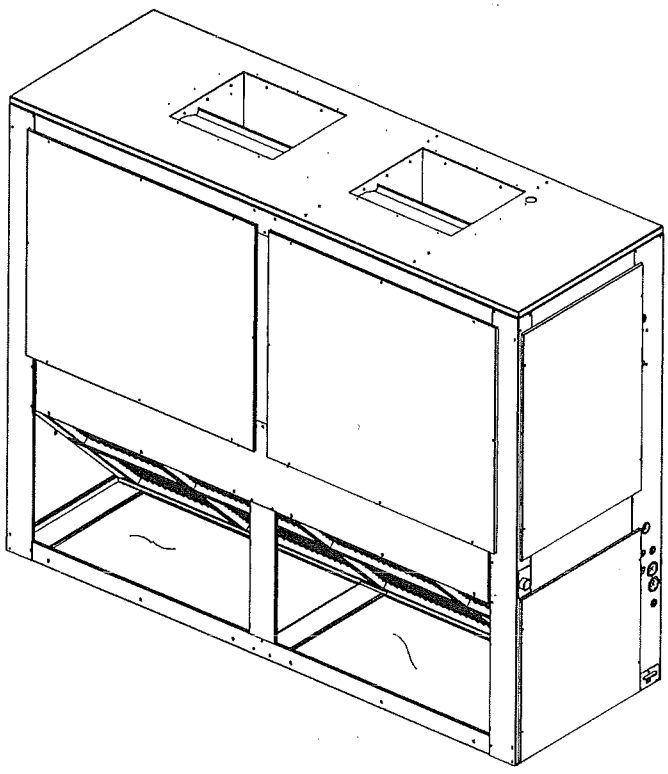

Model (60 Hz)	Model (50 Hz)
TWE061D/E***A	TWE051D***A
TWE090D/E***A	TWE076D***A
TWE120D/E***A	TWE101D/E***A
TWE150E***A	TWE126E***A
TWE180E***A	TWE156E***A
TWE240E***A	TWE201E***A

November 2009 **SSA-SVX06A-EN**

Warnings, Cautions and Notices

Warnings, Cautions and Notices. Note that warnings, cautions and notices appear at appropriate intervals throughout this manual. Warnings are provided to alert installing contractors to potential hazards that could result in personal injury or death. Cautions are designed to alert personnel to hazardous situations that could result in personal injury, while notices indicate a situation that could result in equipment or property-damage-only accidents.

Your personal safety and the proper operation of this machine depend upon the strict observance of these precautions.

ATTENTION: Warnings, Cautions and Notices appear at appropriate sections throughout this literature. Read these carefully.

⚠ **WARNING:** Indicates a potentially hazardous situation which, if not avoided, could result in death or serious injury.

⚠ **CAUTION:** Indicates a potentially hazardous situation which, if not avoided, could result in minor or moderate injury. It could also be used to alert against unsafe practices.

NOTICE: Indicates a situation that could result in equipment or property-damage only accidents.

Important Environmental Concerns!

Scientific research has shown that certain man-made chemicals can affect the earth's naturally occurring stratospheric ozone layer when released to the atmosphere. In particular, several of the identified chemicals that may affect the ozone layer are refrigerants that contain Chlorine, Fluorine and Carbon (CFCs) and those containing Hydrogen, Chlorine, Fluorine and Carbon (HCFCs). Not all refrigerants containing these compounds have the same potential impact to the environment. Trane advocates the responsible handling of all refrigerants-including industry replacements for CFCs such as HCFCs and HFCs.

Responsible Refrigerant Practices!

Trane believes that responsible refrigerant practices are important to the environment, our customers, and the air conditioning industry. All technicians who handle refrigerants must be certified. The Federal Clean Air Act (Section 608) sets forth the requirements for handling, reclaiming, recovering and recycling of certain refrigerants and the equipment that is used in these service procedures. In addition, some states or municipalities may have additional requirements that must also be adhered to for responsible management of refrigerants. Know the applicable laws and follow them.

⚠ WARNING

R-410A Refrigerant under Higher Pressure than R-22!

The unit described in this manual uses R-410A refrigerant which operates at higher pressures than R-22 refrigerant. Use ONLY R-410A rated service equipment or components with this unit. For specific handling concerns with R-410A, please contact your local Trane representative. Failure to use R-410A rated service equipment or components could result in equipment or components exploding under R-410A high pressures which could result in death, serious injury, or equipment damage.

© 2009 Trane All rights reserved

⚠WARNING
Contains R-410A Refrigerant!

System contains oil and refrigerant under high pressure. Recover refrigerant to relieve pressure before opening the system. See unit nameplate for refrigerant type. Do not use non-approved refrigerants, refrigerant substitutes, or refrigerant additives. Failure to follow proper procedures or the use of non-approved refrigerants, refrigerant substitutes, or refrigerant additives could result in death or serious injury or equipment damage.

Important: *DO NOT release refrigerant to the atmosphere! If adding or removing refrigerant is required, the service technician must comply with all federal, state, and local laws.*

Important: *One copy of this document ships inside the control panel of each unit and is customer property. It must be retained by the unit's maintenance personnel.*

⚠WARNING
Personal Protective Equipment (PPE) Required!

Installing/servicing this unit could result in exposure to electrical, mechanical and chemical hazards.

- **Before installing/servicing this unit, technicians MUST put on all Personal Protective Equipment (PPE) recommended for the work being undertaken. ALWAYS refer to appropriate MSDS and OSHA guidelines for proper PPE.**
- **When working with or around hazardous chemicals, ALWAYS refer to appropriate MSDS and OSHA guidelines for information on allowable personal exposure levels, proper respiratory protection and handling recommendations.**
- **If there is a risk of arc or flash, technicians MUST put on all Personal Protective Equipment (PPE) in accordance with NFPA70E for arc/flash protection PRIOR to servicing the unit.**

Failure to follow recommendations could result in death or serious injury.

This booklet describes proper installation, operation, and maintenance procedures for air cooled systems. By carefully reviewing the information within this manual and following the instructions, the risk of improper operation and/or component damage will be minimized.

It is important that periodic maintenance be performed to help assure trouble free operation. Should equipment failure occur, contact a qualified service organization with qualified, experienced HVAC technicians to properly diagnose and repair this equipment.

Important: *All phases of this installation must comply with the NATIONAL, STATE & LOCAL CODES. In addition to local codes, the installation must conform with National Electric Code -ANSI/NFPA NO. 70 LATEST REVISION.*

Any individual installing, maintaining, or servicing this equipment must be properly trained, licensed and qualified.

Table of Contents

Model Number Description 5

General Information 6
- Installation Checklist 6
- Unit Inspection 6
- Initial Leak Test 6
- Lifting Recommendations 6

Pre-Installation 8
- Repositioning Drain Pan 8
- Field Conversion to 460 Volt 9
- Refrigerant Piping 11
- Installations, Limitations and Recommendations 12

Dimensional Data 13

Electrical Data 22

Installation 30
- Horizontal Suspension 30
- Refrigerant Piping 31
- Condensate Piping 32
- Filters 32
- Duct Connections 32
- Air Flow Settings 32
- Electrical Connections 33
- Checkout Procedure 34
- Installation Checklist 34

Electrical Wiring 34
- Thermostat and Control Connections for Electromechanical Controls . 35
- Thermostat and Control Connections for ReliaTel™ Controls 36

Maintenance 38
- Fan Belt Adjustment 38
- Monthly 39
- Annually (Cooling Season) 40
- Coil Cleaning 40
- Precautionary Measures 41
- First Aid Measures 41
- Maintenance Log 42

Warranty 43

Central Air Conditioner 43
- Commercial Equipment Rated 20 Tons and Larger and Related Accessories (Parts Only) 43

Wiring Diagram Matrix 45

Model Number Description

TWE	240	E	3	00	B	A
1 2 3	4 5 6	7	8	9 10	11	12

Model Number Description

All products are identified by a multiple-character model number that precisely identifies a particular type of unit. An explanation of the alphanumeric identification code is provided. Its use will enable the owner/operator, installing contractors, and service engineers to define the operation, specific components, and other options for any specific unit.

Note: *When ordering replacement parts or requesting service, be sure to refer to the specific model number, serial number, and DL number (if applicable) stamped on the unit nameplate.*

DIGITS 1 - 3: Product Type

TWE = Split System Heat Pump/Cooling Air Handler

DIGITS 4 - 6: Nominal Gross Cooling Capacity (MBh)

061 = 5 Tons (60 Hz)
090 = 7½ Tons (60 Hz)
120 = 10 Tons (60 Hz)
150 = 12½ Tons (60 Hz)
180 = 15 Tons (60 Hz)
240 = 20 Tons (60 Hz)

051 = 4.6 Tons (50 Hz)
076 = 6.25 Tons (50 Hz)
101 = 8.33 Tons (50 Hz)
126 = 10.4 Tons (50 Hz)
156 = 13 Tons (50 Hz)
201 = 16.7 Tons (50 Hz)

DIGIT 7: Major Development Sequence

D = Single Circuit
E = Dual Circuit

DIGIT 8: Electrical Characteristics

1 = 208-230/60/1
3 = 208-230/60/3
4 = 460/60/3

W = 575/60/3
D = 380-415/50/3
K = 380/60/3

DIGITS 9 - 10: Factory Installed Options

00 = Packed Stock

DIGITS 11: Minor Design Sequence

A & B = Current Design Sequence

DIGITS 12: Service Digit

A = Current Service Digit

General Information

Installation procedures should be performed in the sequence that they appear in this manual. Do not destroy or remove the manual from the unit.

The manual should remain weather-protected with the unit until all installation procedures are complete.

Note: *It is not the intention of this manual to cover all possible variations in systems that may occur or to provide comprehensive information concerning every possible contingency that may be encountered during an installation. If additional information is required or if specific problems arise that are not fully discussed in this manual, contact your local sales office.*

This manual covers installation of the TWE air handlers. These air handler models incorporate a single slab coil assembly, improved application flexibility, servicing, maintenance accessibility and an improved accessory line. They are fully convertible, (vertical to horizontal discharge) without field removal of the coil assembly. They are shipped ready for horizontal installation.

All units have one drain pan that can be installed in any one of four positions. This allows for vertical or horizontal applications and right or left exit.

Important: *All dual circuit (digit 7 = E) have an intertwined coil.*

Installation Checklist

An "Installation Checklist" is provided at the end of the installation section of this manual. Use the checklist to verify that all necessary installation procedures have been completed. Do not use the checklist as a substitute for reading the information contained in the manual. Read the entire manual before beginning installation procedures.

Unit Inspection

Inspect material carefully for any shipping damage. If damaged, it must be reported to, and claims made against the transportation company. Compare the information that appears on the unit nameplate with ordering and submittal data to ensure the proper unit was shipped. Available power supply must be compatible with electrical characteristics specified on component nameplates. Replace damaged parts with authorized parts only.

Initial Leak Test

All TWE units are shipped with a holding charge of nitrogen in each circuit. Remove the access panel shown in Figure 13, p. 21. Locate the liquid line or suction line access valve for each circuit. Install gauges to determine if the circuits are still pressurized. If not, the charge has escaped. Repair as required to obtain a leak-free circuit.

Lifting Recommendations

⚠ WARNING
Improper Unit Lift!

Each of the cables (chains or slings) used to lift the unit must be capable of supporting the entire weight of the unit. Lifting cables (chains or slings) may not be of the same length. Adjust as necessary for even unit lift. Other lifting arrangements may cause equipment or property-only damage. Failure to properly lift unit could result in death or serious injury. Refer to Table 1 and Table 2 for unit weight.

NOTICE
Equipment Damage!

Use spreader bars to prevent straps from damaging the unit. Install the bars between lifting straps, both underneath the unit and above the unit. This will prevent the straps from crushing the unit cabinet or damaging the unit finish.

Before preparing the unit for lifting, estimate the approximate center of gravity for lifting safety. Because of placement of internal components, the unit weight may be unevenly distributed. Approximate unit weights are given in Table 1 and Table 2, p. 7.

The crated unit can be moved using a forklift of suitable capacity. For lifting the unit into an elevated mounting position, run lifting straps or slings under the unit and attach securely to the lifting device.

Table 1. TWE Unit and Corner Weights - lbs (60 Hz)

Tons	Model No.	Shipping Max (lbs)	Net Max (lbs)	Corner Weights - Vertical				Corner Weights - Horizontal			
				1	2	3	4	A	B	C	D
5	TWE061D/E	263	232	55	71	51	55	54	67	50	61
7½	TWE090D/E	360	323	67	99	75	82	56	92	87	88
10	TWE120D/E	429	393	77	121	110	85	79	118	77	119
12½	TWE150E	730	676	168	192	181	135	196	164	145	171
15	TWE180E	729	675	167	192	181	135	196	163	145	171
20	TWE240E	891	818	258	168	161	231	256	181	146	235

Table 2. TWE Unit and Corner Weights - kg (50 Hz)

Tons	Model No.	Shipping Max (kg)	Net Max (kg)	Corner Weights - Vertical				Corner Weights - Horizontal			
				1	2	3	4	A	B	C	D
5	TWE051D/E	118	104	25	32	23	25	24	30	23	27
7½	TWE076D/E	162	145	30	45	34	37	25	41	39	40
10	TWE101D/E	193	177	35	54	50	38	36	53	35	54
12½	TWE126E	329	304	76	86	81	61	88	74	65	77
15	TWE156E	328	304	75	86	81	61	88	73	65	77
20	TWE201E	401	368	116	76	72	104	115	81	66	106

Pre-Installation

The final position for the air handler must be dictated by required service access to it, weight distribution over structural supports, and by the locations of electrical, refrigerant and condensate drainage connections. After this is determined, the following preparations should be made.

Repositioning Drain Pan

These air handlers come with one drain pan that can be installed in any one of four positions; this allows for vertical or horizontal application and right or left condensate line connection. The drain pan can also be easily removed for periodic cleaning.

Note: *Important! All air handlers are shipped with the drain pan installed in the horizontal position and the connection on the left side (as shown in Figure 1. If an alternate position is required, the drain pan should be repositioned before setting the air handler.*

Figure 1. Drain Pan Location

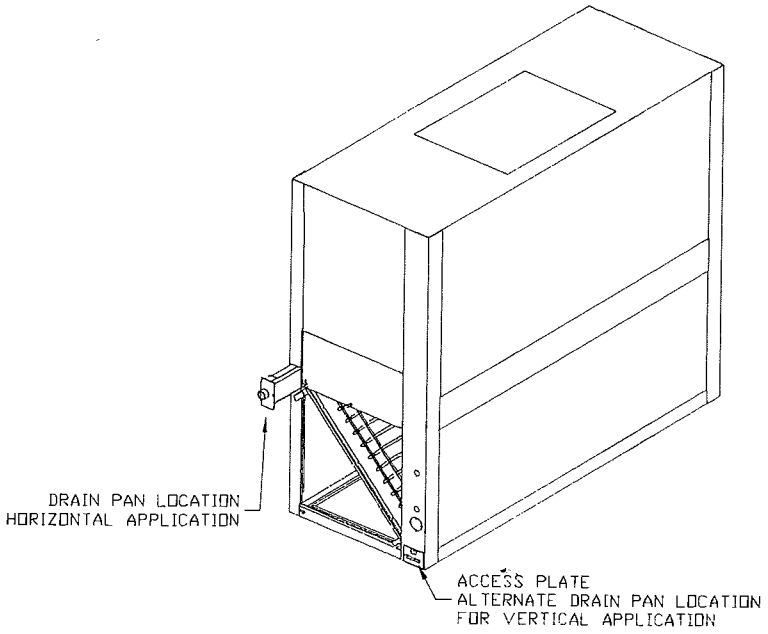

Process for Drain Pan Relocation

1. Remove the access plate at the opposite end of the drain connection. This plate secures and lifts the back end of the drain pan for sloping. It must be removed before the drain pan can be removed. This is done as follows:
   a. Remove the screw
   b. Lift the access plate up
   c. Pull the plate out. If the drain pan is to be moved to the vertical position also remove the other two access plates.
2. Remove the screw securing the drain pan.
   a. Lift the pan up
   b. Slide the pan out
3. Install the drain pan into the new position.
   a. Slide the drain pan into the opening
   b. Lift the drain pan up
   c. Push it in all the way
   d. Drop it down over the lip of the opening, secure with screw
4. Install the access plate on the opposite end of the drain pain.
   a. Slide the edge of the access plate under the drain pan
   b. Lift the access plate and drain pan up
   c. Push the access plate in
   d. Drop the access plate down over the lip of the opening, secure with screw. If the drain pan is being moved to the vertical position, install the other access plates over the horizontal position opening.

Figure 2. Drain Pan Relocation

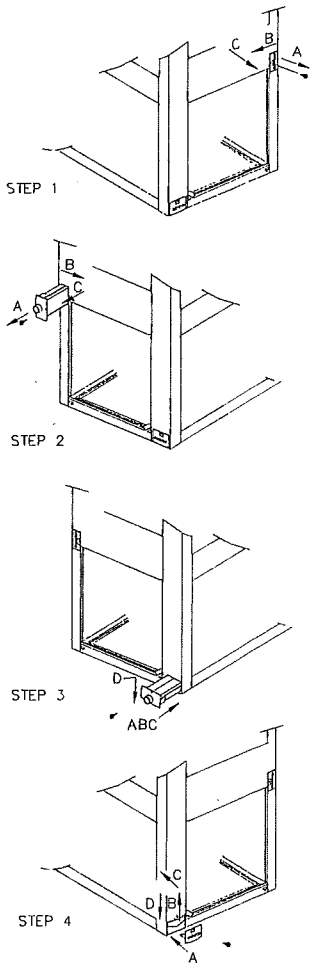

NOTICE

System Component Damage!

These air handlers are shipped with a dry nitrogen holding charge in the coil. Depress or remove the access valve core to bleed off the nitrogen prior to brazing. Temporarily cap off tubes if the refrigerant line connections are to be made later.

Field Conversion to 460 Volt

⚠WARNING

Hazardous Voltage w/Capacitors!

Disconnect all electric power, including remote disconnects and discharge all motor start/run capacitors before servicing. Follow proper lockout/tagout procedures to ensure the power cannot be inadvertently energized. For variable frequency drives or other energy storing components provided by Trane or others, refer to the appropriate manufacturer's literature for allowable waiting periods for discharge of capacitors. Verify with an appropriate voltmeter that all capacitors have discharged. Failure to disconnect power and discharge capacitors before servicing could result in death or serious injury.

⚠WARNING
Grounding Required!

Follow proper local and state electrical code on requirements for grounding. Failure to follow code could result in death or serious injury.

- Available power supply must agree with electrical data on component nameplate.
- Some air handlers are shipped wired for 208-230 volt applications and can be converted for 460 volt by rewiring the blower motor, see Figure 3. (This includes models TWE090D3, TWE090E3, TWE120D3, TWE120E3, TWE150E3 and TWE180E3).

Converting Motor to 460 Volt

1. Ensure power is disconnected to unit by following the warning above.
2. Remove unit access panels closest to motor.
3. Open terminal cover on lead end of motor.
4. Pull voltage selector plug from low voltage selection (see Figure 3).
5. Shift the plug (or rotate 180°) to align plug for high voltage selection and re-insert plug.

Important: *When re-inserting voltage selection plug, ensure it is fully seated.*

6. Replace terminal cover on lead end of motor.
7. Replace unit access panels.

Figure 3. Voltage Change Plug

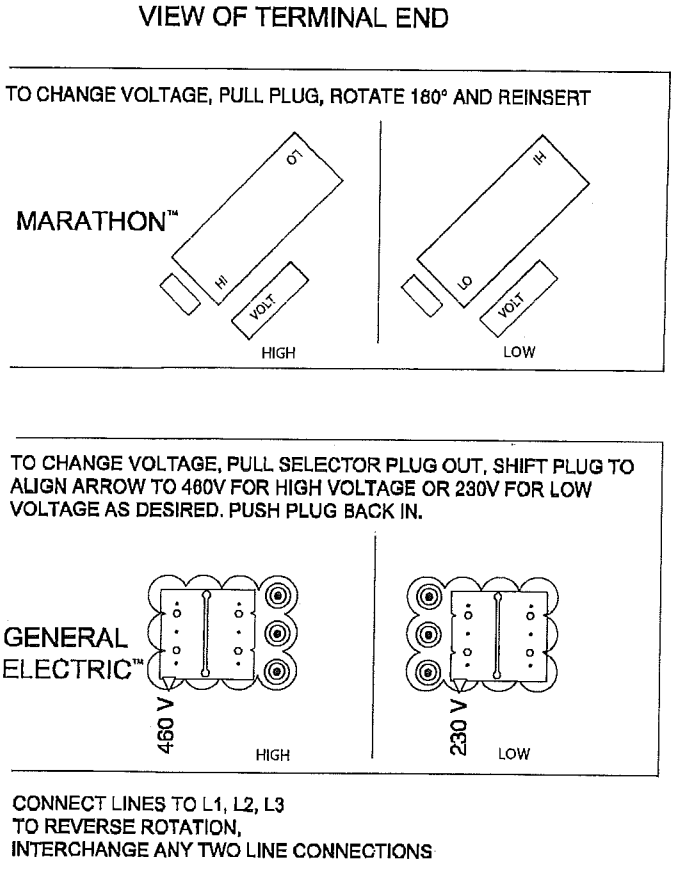

Refrigerant Piping

Evaporator Coil Orientation

Important: *Applies only to TWE126/150 and 156/180 when positioned for vertical upflow. Unit is shipped in the horizontal position. If installing in the* ***vertical position****, the coil* ***must be*** *reoriented by rotating the coil 4 degrees (control box side) from the shipped position. See instructions and Figure 4 below.*

Process for reorienting evaporator coil on TWE126, 150, 156 and 180 only.

1. Remove screws from top evaporator coil bracket (bracket that attaches coil to cabinet and runs the length of the unit).
2. Rotate evaporator coil approximately 4 degrees clockwise - looking from the control box end (see Figure 4). When the evaporator coil is rotated, the lower set of evaporator coil bracket holes will align with the support bracket (from which it was originally fastened).
3. Reinsert screws in evaporator coil bracket.

Figure 4. Evaporator Coil Reorientation for TWE126, 150, 156, 180

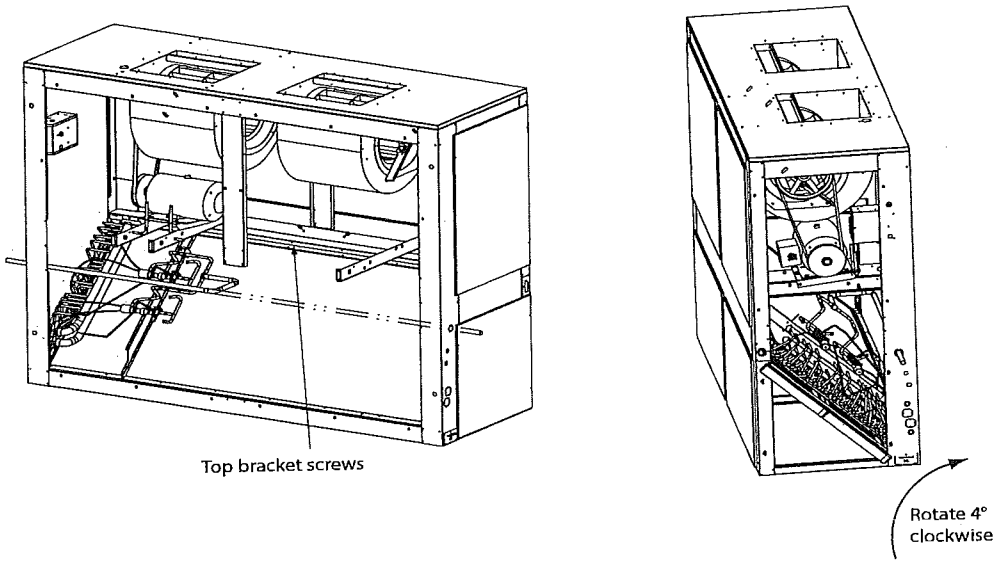

Preparation

NOTICE

Unit Damage!

Do not apply heat to remove seal caps until the gauge port cores have been removed. If seal caps are intact, application of heat may generate excessive pressure in the unit and result in damage to the coil or expansion valve.

The air handler is designed so that refrigerant piping can enter from either the right or left hand side. It is shipped with the intent that the refrigerant lines will enter from the left hand side. To convert to right hand entry, unbraze the elbow on the suction line and rotate 180° and rebraze.

Important: *Access to refrigerant lines is limited in all horizontal and some vertical applications. Therefore, refrigerant lines should be stubbed out and temporarily capped prior to setting the air handler. Protect adjacent surfaces from heat damage when brazing in and around the air handler.*

Installations, Limitations and Recommendations

NOTICE
System Component Damage!

Properly insulate all refrigerant gas piping to prevent possible water damage due to condensation and to prevent capacity loss and possible compressor damage.

The general location of the air handler is normally selected by the architect, contractor and/or buyer. For proper installation the following items must be considered.

- Available power supply must agree with electrical data on component nameplate.
- If external accessories are installed on the unit, additional clearances must be provided.
- All duct work should be properly insulated to prevent condensation and heat loss.
- Refrigerant gas piping must be insulated.

It is recommended that the outline drawings (Figure 6, p. 14 - Figure 13, p. 21) be studied and dimensions properly noted and checked against the selected installation site. By noting in advance which features are to be used, proper clearance allowances can be made for installation and possible future service.

Important: *When installing these units "free standing" with discharge grills and isolators, a top support with isolator should be added to prevent tipping. Support and isolator can be attached to a wall or other appropriate structure.*

Important: *If adding external accessories to the unit, additional clearances must be considered for the overall space needed.*

For installation of accessories available for this air handler, follow the instructions packed with each accessory.

Dimensional Data

Figure 5. TWE Quick Reference

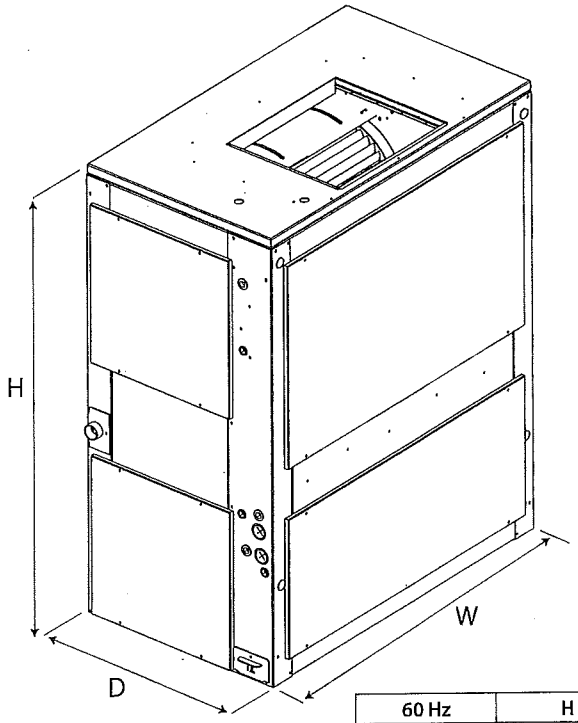

60 Hz	H	W	D
TWE061	48-1/8 (1222.4)	39-5/8 (1006.5)	23-5/8 (600)
TWE090	54-1/8 (1374.8)	49-1/8 (1247.8)	26-1/2 (673.1)
TWE120	54-1/8 (1374.8)	65-1/8 (1654.2)	26-1/2 (673.1)
TWE150, 180	69-1/8 (1756)	81-1/4 (2063.7)	30 (762)
TWE240	71-7/8 (1806.6)	94-1/4 (2394)	32-1/8 (816)

50 Hz	H	W	D
TWE051	48-1/8 (1222.4)	39-5/8 (1006.5)	23-5/8 (600)
TWE076	54-1/8 (1374.8)	49-1/8 (1247.8)	26-1/2 (673.1)
TWE101	54-1/8 (1374.8)	65-1/8 (1654.2)	26-1/2 (673.1)
TWE126, 156	69-1/8 (1756)	81-1/4 (2063.7)	30 (762)
TWE201	71-7/8 (1806.6)	94-1/4 (2394)	32-1/8 (816)

Note: *Full dimensional data available on next pages.*

Figure 6. TWE051, 061 Air Handler, Single Circuit

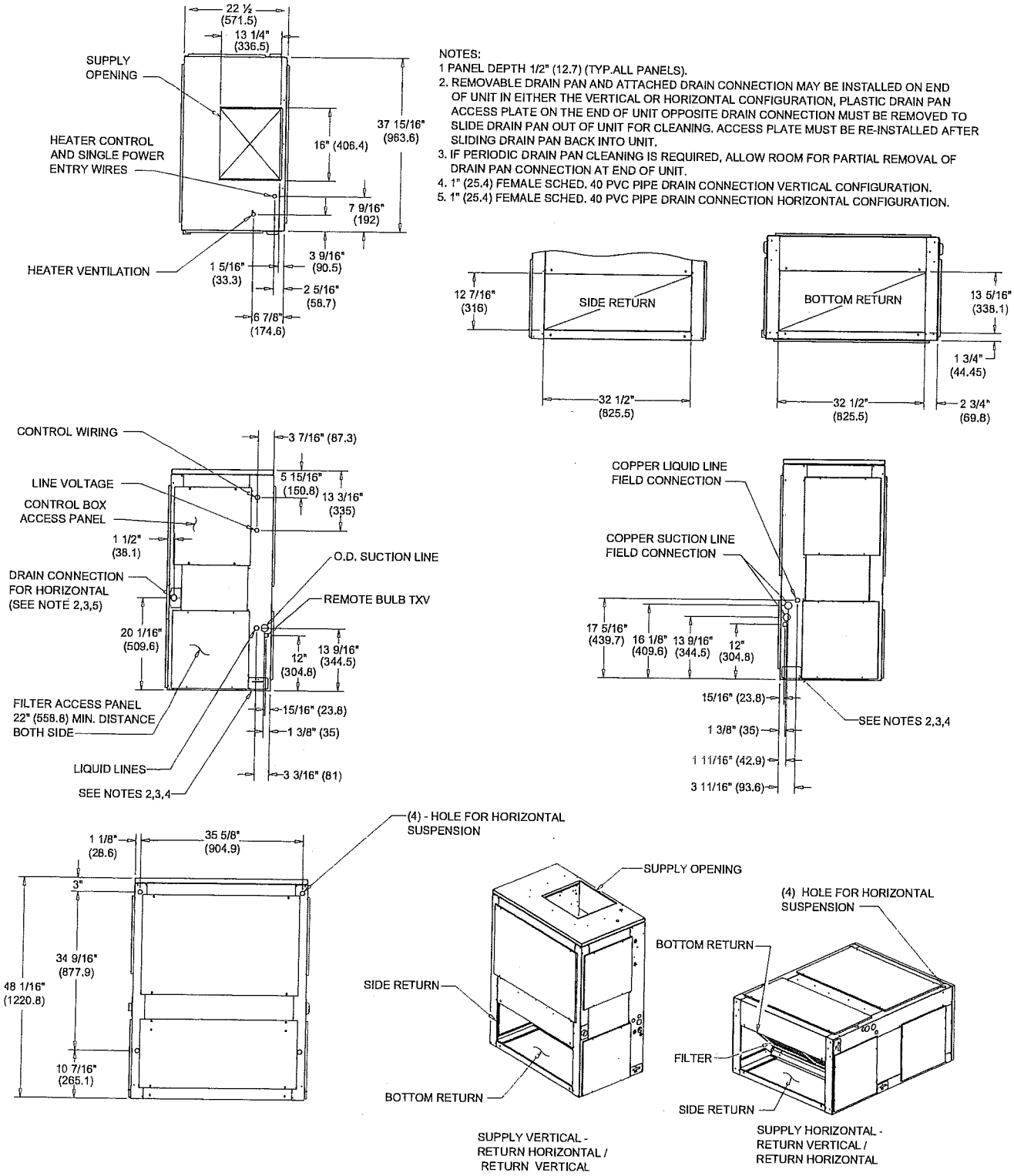

Figure 7. TWE061 Air Handler, Dual Circuit

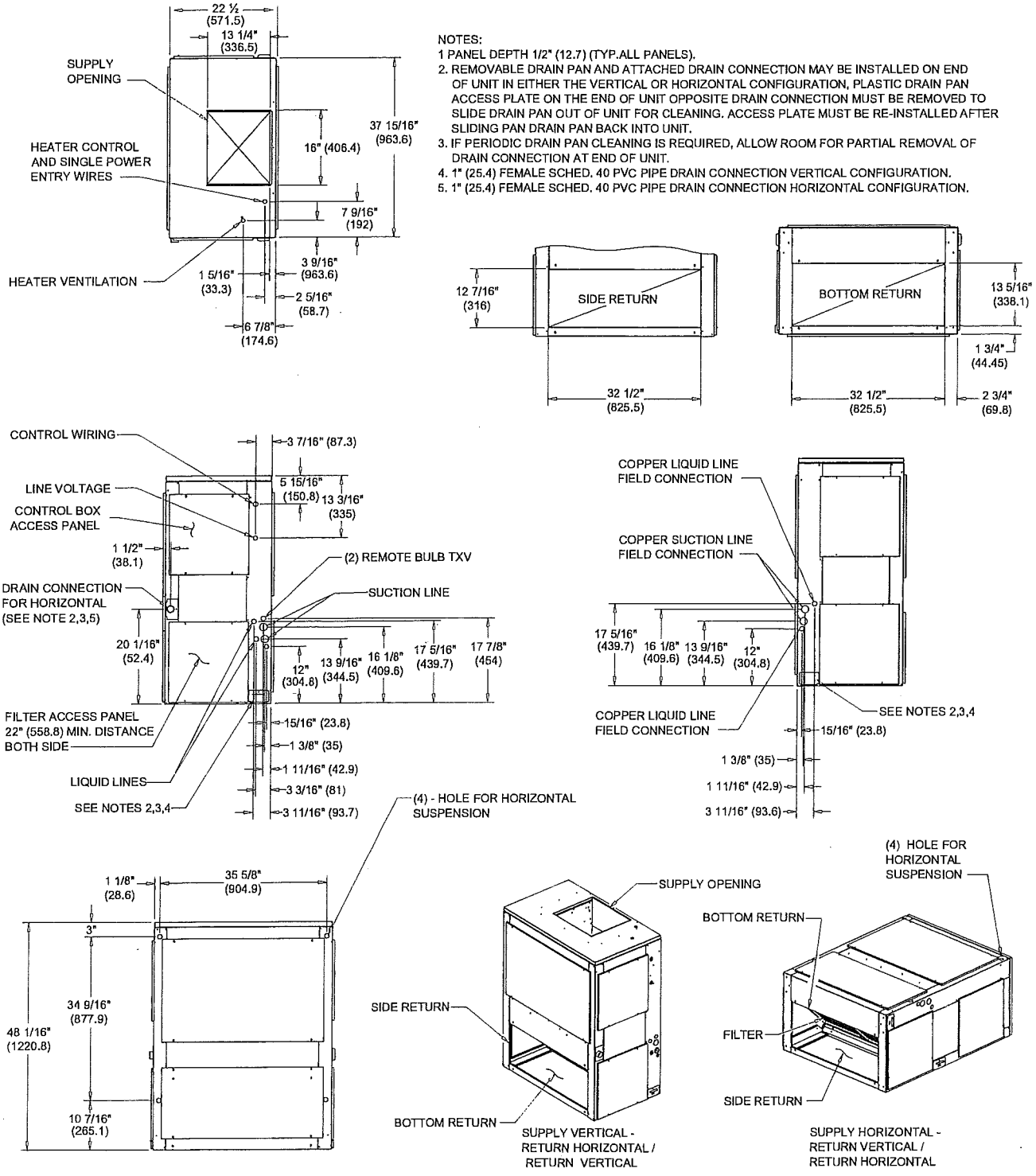

Figure 8. TWE076, 090 Air Handler, Single Circuit

NOTES:
1. PANEL DEPTH 1/2" (12.7) (TYP.ALL PANELS).
2. REMOVABLE DRAIN PAN AND ATTACHED DRAIN CONNECTION MAY BE INSTALLED ON END OF UNIT IN EITHER THE VERTICAL OR HORIZONTAL CONFIGURATION, PLASTIC DRAIN PAN ACCESS PLATE ON THE END OF UNIT OPPOSITE DRAIN CONNECTION MUST BE REMOVED TO SLIDE DRAIN PAN OUT OF UNIT CLEANING. ACCESS PLATE MUST BE RE-INSTALLED AFTER SLIDING DRAIN PAN BACK INTO UNIT.
3. IF PERIODIC DRAIN PAN CLEANING IS REQUIRED, ALLOW ROOM FOR PARTIAL REMOVAL OF DRAIN PAN CONNECTION AT END OF UNIT.
4. 1" (25.4) FEMALE SCHED. 40 PVC PIPE DRAIN CONNECTION VERTICAL CONFIGURATION.
5. 1" (25.4) FEMALE SCHED. 40 PVC PIPE DRAIN CONNECTION HORIZONTAL CONFIGURATION.

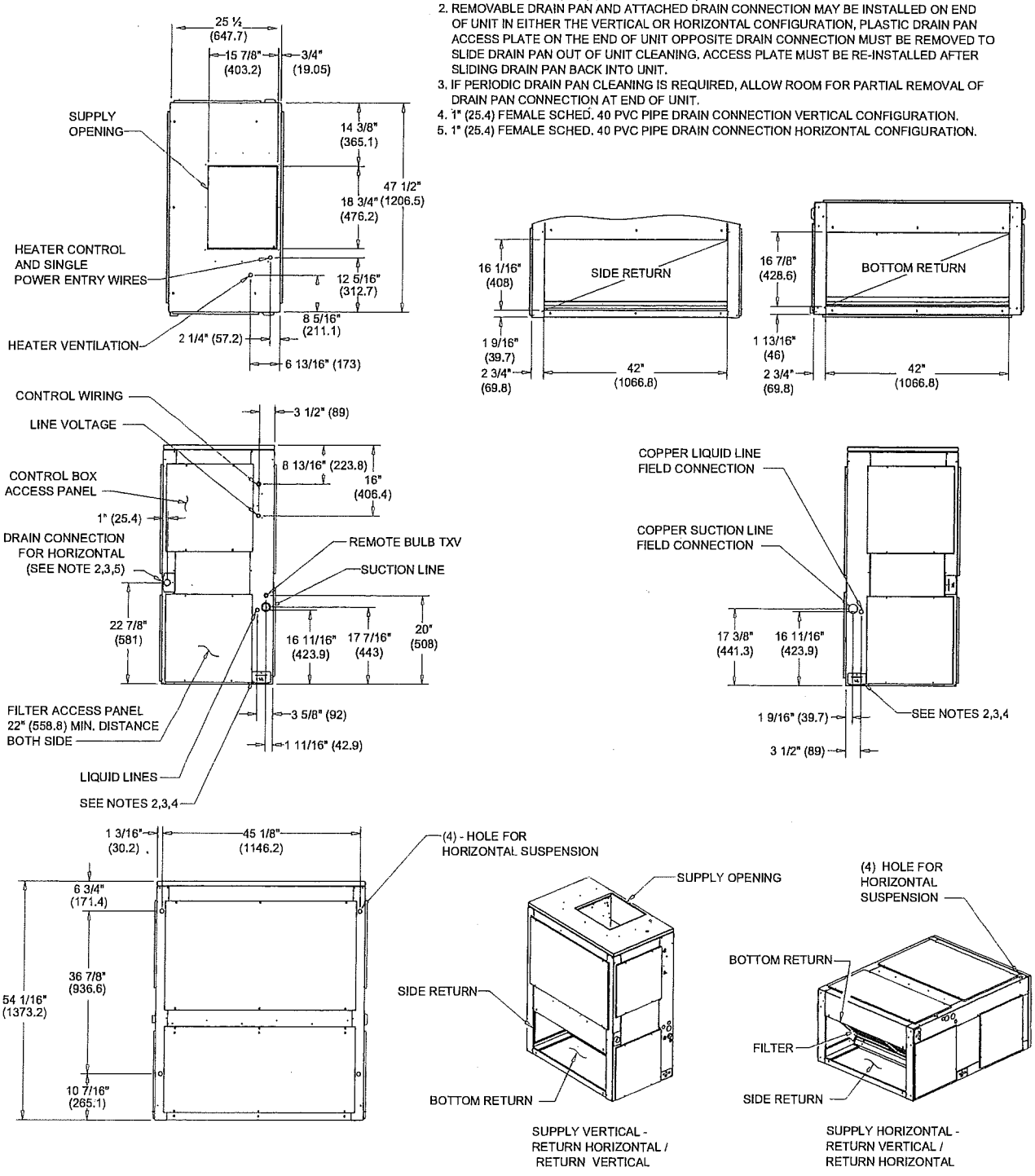

Figure 9. TWE090 Air Handler, Dual Circuit

NOTES:
1 PANEL DEPTH 1/2" (12.7) (TYP.ALL PANELS).
2. REMOVABLE DRAIN PAN AND ATTACHED DRAIN CONNECTION MAY BE INSTALLED ON END OF UNIT IN EITHER THE VERTICAL OR HORIZONTAL CONFIGURATION, PLASTIC DRAIN PAN ACCESS PLATE ON THE END OF UNIT OPPOSITE DRAIN CONNECTION MUST BE REMOVED TO SLIDE DRAIN PAN OUT OF UNIT FOR CLEANING. ACCESS PLATE MUST BE RE-INSTALLED AFTER SLIDING DRAIN PAN BACK INTO UNIT.
3. IF PERIODIC DRAIN PAN CLEANING IS REQUIRED, ALLOW ROOM FOR PARTIAL REMOVAL OF DRAIN PAN CONNECTION AT END OF UNIT.
4. 1" (25.4) FEMALE SCHED. 40 PVC PIPE DRAIN CONNECTION VERTICAL CONFIGURATION.
5. 1" (25.4) FEMALE SCHED. 40 PVC PIPE DRAIN CONNECTION HORIZONTAL CONFIGURATION.

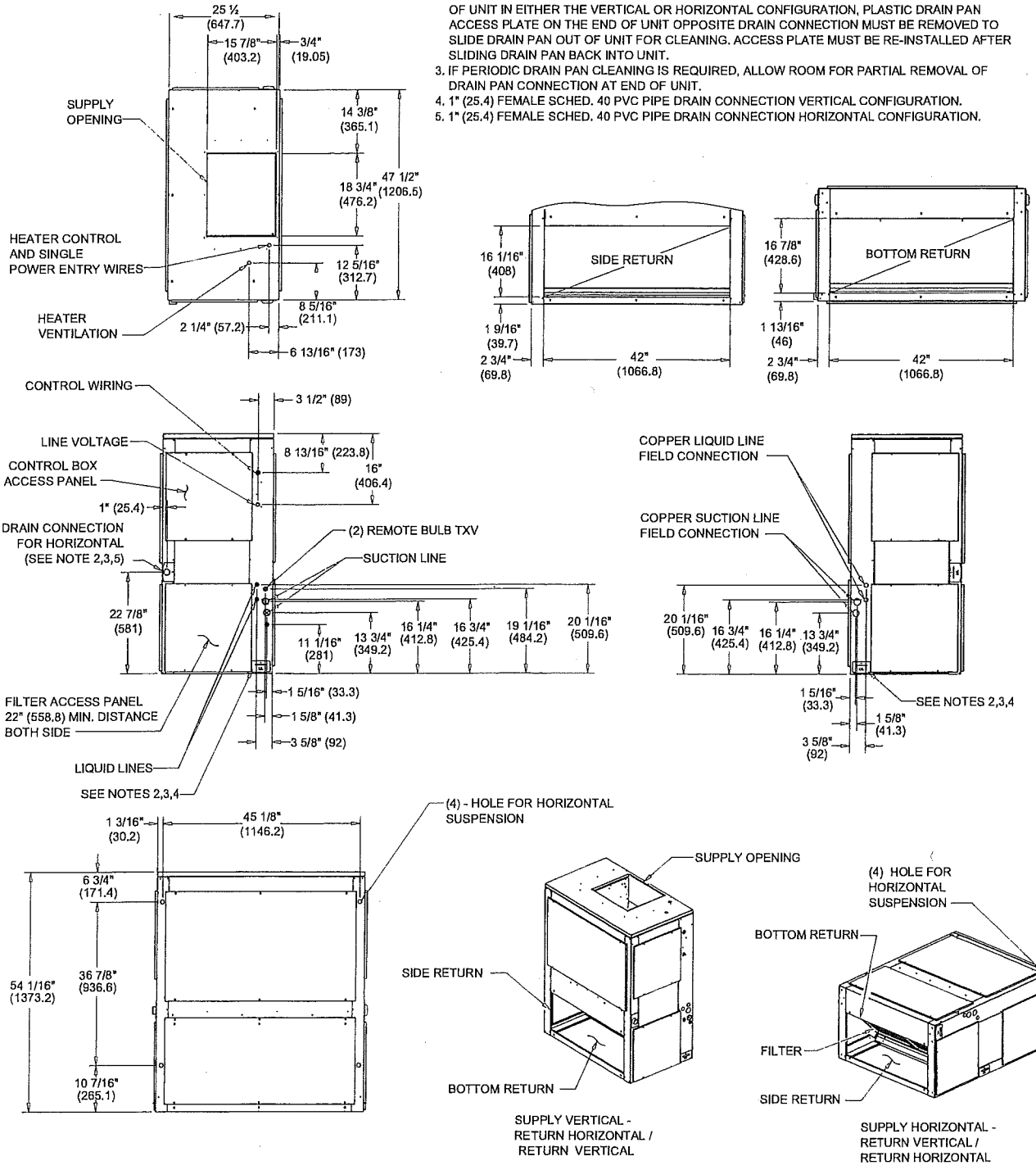

Figure 10. TWE101, 120 Air Handler, Single Circuit

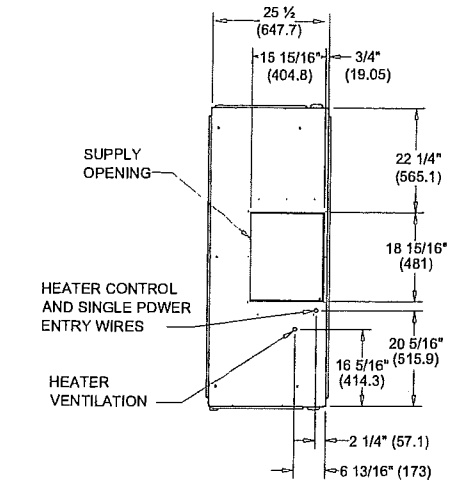

NOTES:
1 PANEL DEPTH 1/2" (12.7) (TYP.ALL PANELS).
2. REMOVABLE DRAIN PAN AND ATTACHED DRAIN CONNECTION MAY BE INSTALLED ON END OF UNIT IN EITHER THE VERTICAL OR HORIZONTAL CONFIGURATION, PLASTIC DRAIN PAN ACCESS PLATE ON THE END OF UNIT OPPOSITE DRAIN CONNECTION MUST BE REMOVED TO SLIDE DRAIN PAN OUT OF UNIT FOR CLEANING. ACCESS PLATE MUST BE RE-INSTALLED AFTER SLIDING DRAIN PAN BACK INTO UNIT.
3. IF PERIODIC DRAIN PAN CLEANING IS REQUIRED, ALLOW ROOM FOR PARTIAL REMOVAL OF DRAIN PAN CONNECTION AT END OF UNIT.
4. 1" (25.4) FEMALE SCHED. 40 PVC PIPE DRAIN CONNECTION VERTICAL CONFIGURATION.
5. 1" (25.4) FEMALE SCHED. 40 PVC PIPE DRAIN CONNECTION HORIZONTAL CONFIGURATION.

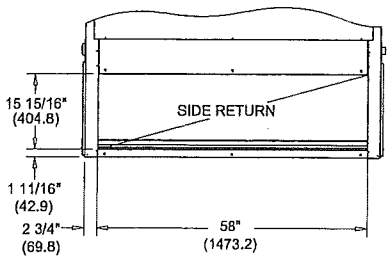

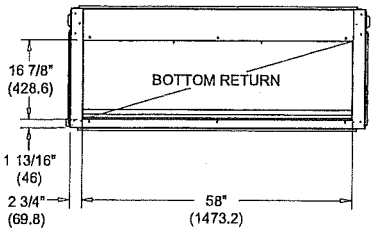

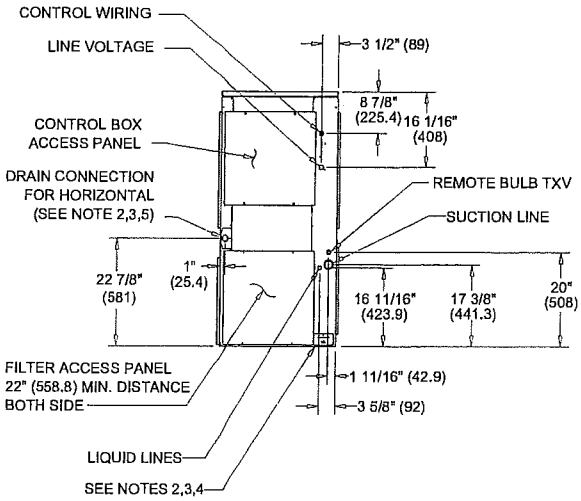

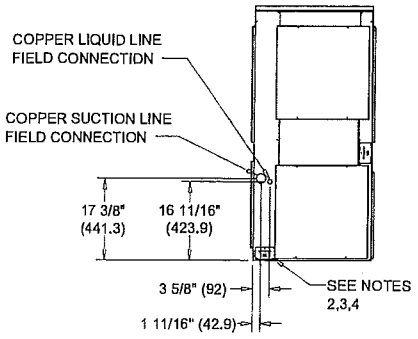

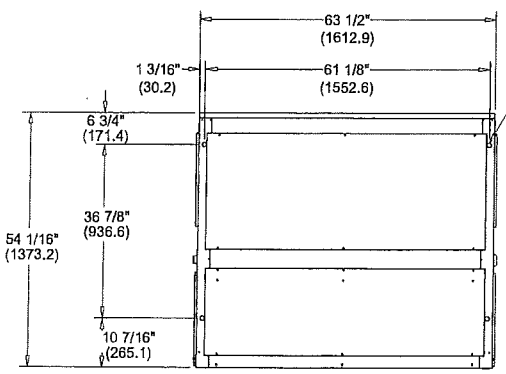

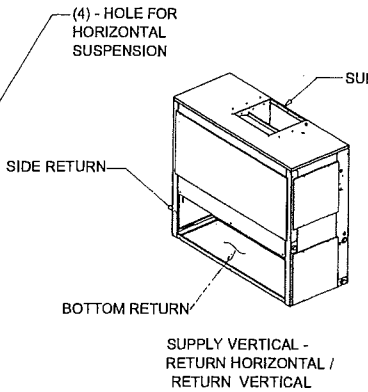

SUPPLY VERTICAL -
RETURN HORIZONTAL /
RETURN VERTICAL

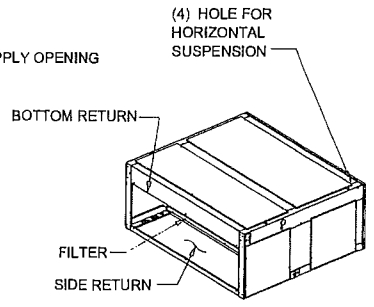

SUPPLY HORIZONTAL -
RETURN VERTICAL /
RETURN HORIZONTAL

Figure 11. TWE101, 120 Air Handler, Dual Circuit

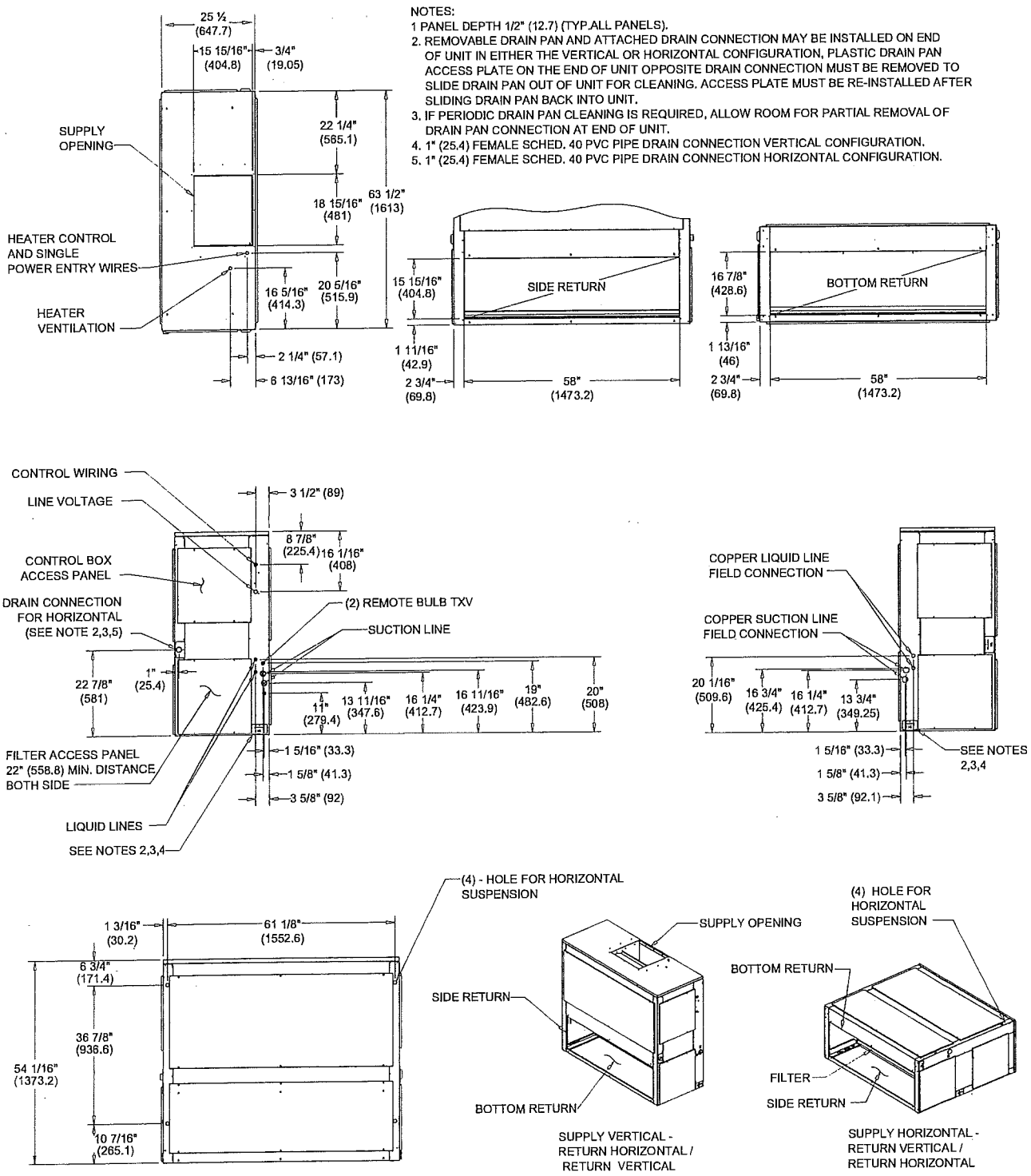

Figure 12. TWE126, 150, 156, 180 Air Handler, Dual Circuit

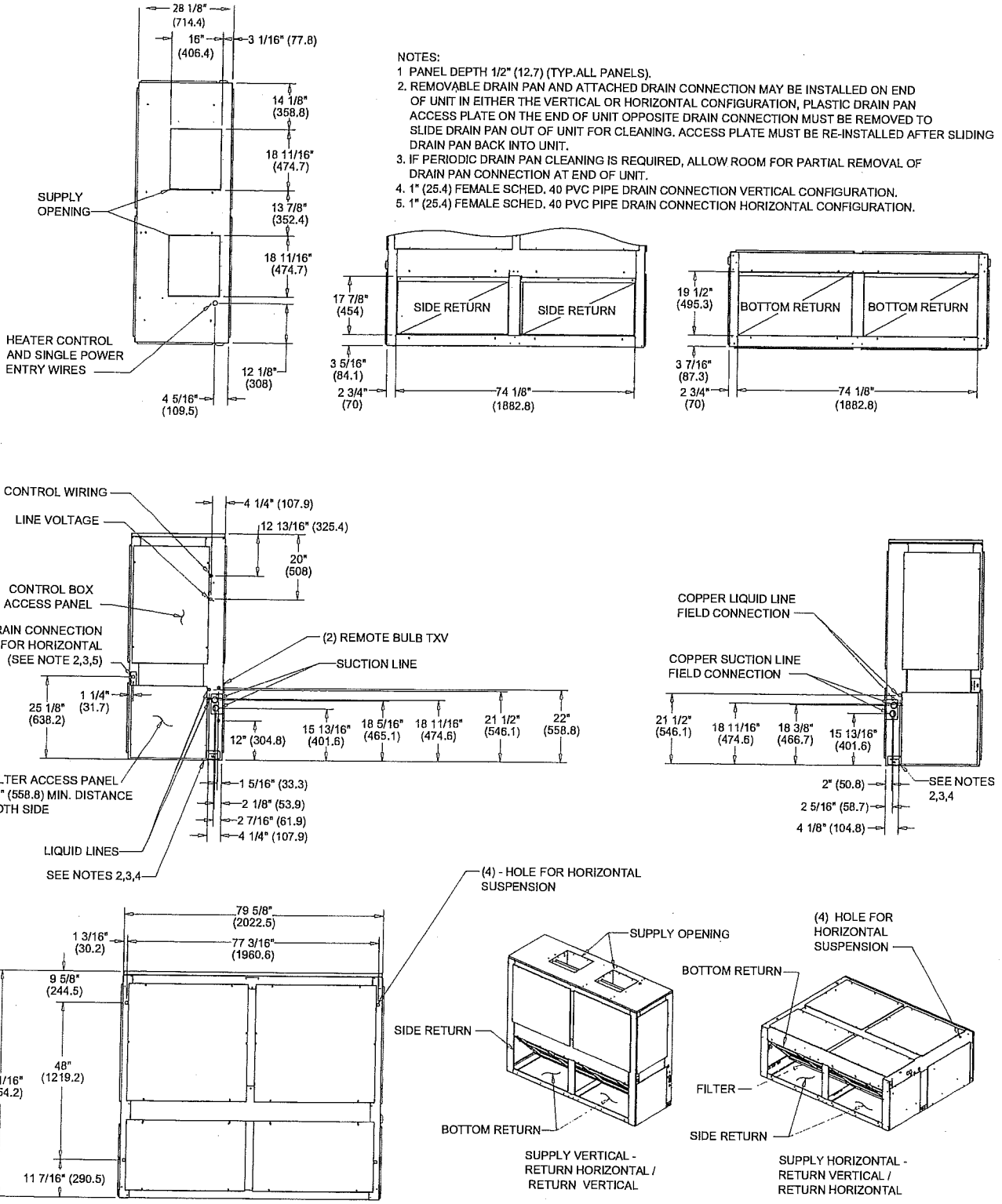

Figure 13. TWE201, 240 Air Handler, Dual Circuit

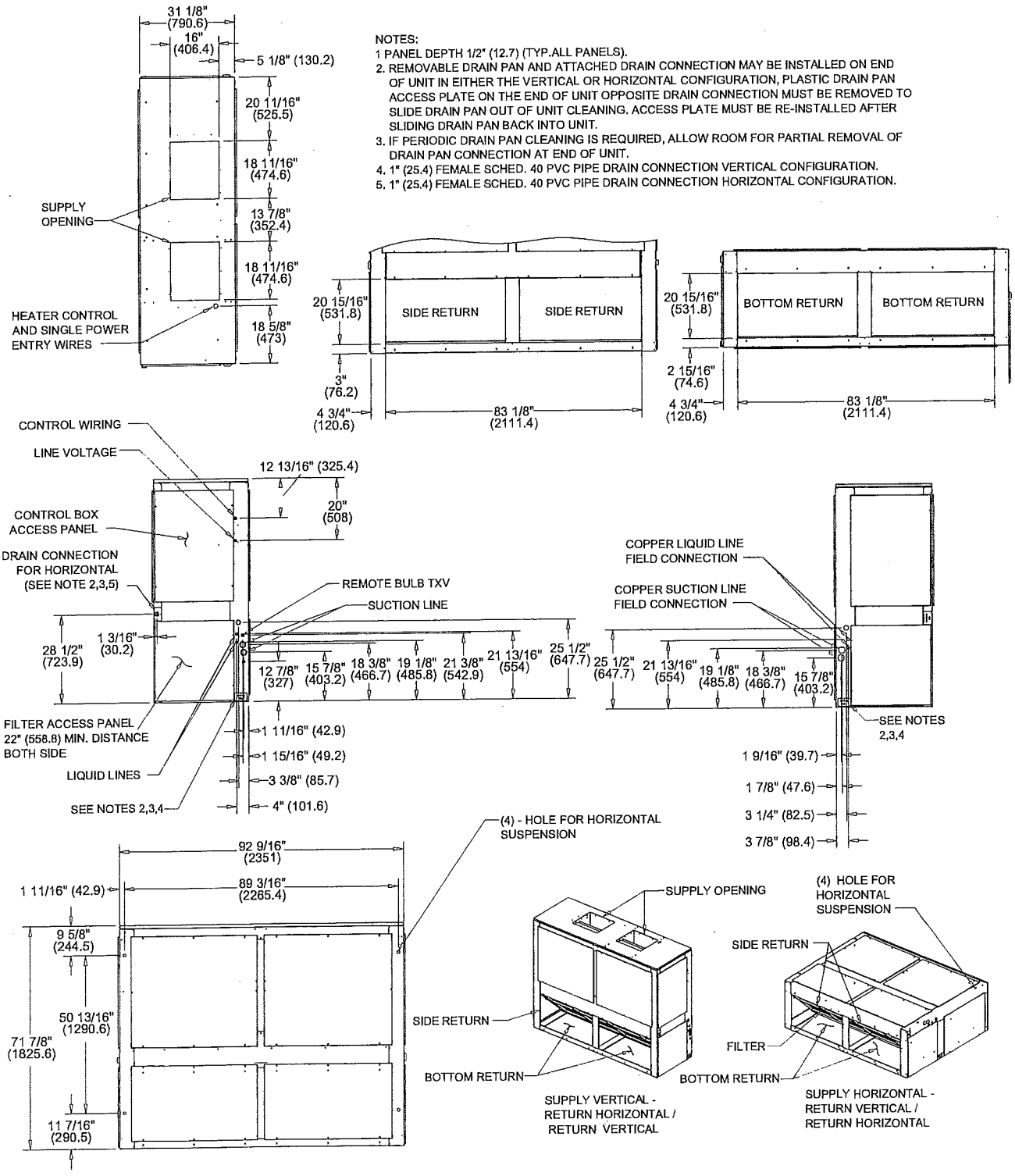

Electrical Data

Table 3. Electrical Characteristics — Standard and Low Static Motors — 60 Hz Air Handler[a]

Tons	Unit Model Number	Standard Evaporator Fan Motor								Low Static Evaporator Fan Motor							
						Amps								Amps			
		No.	Volts	Phase	Hp	FLA	LRA	MCA	MFS	No.	Volts	Phase	Hp	FLA	LRA	MCA	MFS
5	TWE061D1, E1	1	208	1	0.75	6.0	41.0	7.5	15	N/A	N/A	N/A	N/A	N/A	N/A	N/A	N/A
	TWE061D1, E1	1	230	1	0.75	5.9	45.0	7.4	15	N/A	N/A	N/A	N/A	N/A	N/A	N/A	N/A
	TWE061D3, E3	1	208	3	0.75	2.5	16.4	3.1	15	N/A	N/A	N/A	N/A	N/A	N/A	N/A	N/A
	TWE061D3, E3	1	230	3	0.75	2.4	16.4	3.0	15	N/A	N/A	N/A	N/A	N/A	N/A	N/A	N/A
	TWE061D4, E4	1	460	3	0.75	1.2	8.2	1.5	15	N/A	N/A	N/A	N/A	N/A	N/A	N/A	N/A
	TWE061DW	1	575	3	0.75	1.3	6.1	1.6	15	N/A	N/A	N/A	N/A	N/A	N/A	N/A	N/A
7½	TWE090D1, E1	1	208	1	1.50	6.8	31.5	8.5	15	N/A	N/A	N/A	N/A	N/A	N/A	N/A	N/A
	TWE090D1, E1	1	230	1	1.50	6.2	31.5	7.8	15	N/A	N/A	N/A	N/A	N/A	N/A	N/A	N/A
	TWE090D3, E3	1	208	3	1.50	5.3	34.3	6.6	15	N/A	N/A	N/A	N/A	N/A	N/A	N/A	N/A
	TWE090D3, E3	1	230	3	1.50	5.0	34.3	6.3	15	N/A	N/A	N/A	N/A	N/A	N/A	N/A	N/A
	TWE090D3, E3[b]	1	460	3	1.50	2.5	17.0	3.1	15	N/A	N/A	N/A	N/A	N/A	N/A	N/A	N/A
	TWE090DW	1	575	3	1.50	1.8	13.6	2.3	15	N/A	N/A	N/A	N/A	N/A	N/A	N/A	N/A
10	TWE120D1, E1	1	208	1	2.00	8.5	57.4	10.6	15	N/A	N/A	N/A	N/A	N/A	N/A	N/A	N/A
	TWE120D1, E1	1	230	1	2.00	7.7	57.4	9.6	15	N/A	N/A	N/A	N/A	N/A	N/A	N/A	N/A
	TWE120D3, E3	1	208	3	2.00	6.2	33.9	7.8	15	N/A	N/A	N/A	N/A	N/A	N/A	N/A	N/A
	TWE120D3, E3	1	230	3	2.00	5.8	33.9	7.3	15	N/A	N/A	N/A	N/A	N/A	N/A	N/A	N/A
	TWE120D3, E3[b]	1	460	3	2.00	2.9	33.9	3.6	15	N/A	N/A	N/A	N/A	N/A	N/A	N/A	N/A
	TWE120DW, EW	1	575	3	2.00	2.3	14.4	2.9	15	N/A	N/A	N/A	N/A	N/A	N/A	N/A	N/A
12½	TWE150E3	1	208	3	2.00	5.95	23.0	7.4	15	N/A	N/A	N/A	N/A	N/A	N/A	N/A	N/A
	TWE150E3	1	230	3	2.00	5.5	23.0	6.9	15	N/A	N/A	N/A	N/A	N/A	N/A	N/A	N/A
	TWE150E3[b]	1	460	3	2.00	2.75	23.0	3.4	15	N/A	N/A	N/A	N/A	N/A	N/A	N/A	N/A
	TWE150EW	1	575	3	2.00	2.2	18.0	2.8	15	N/A	N/A	N/A	N/A	N/A	N/A	N/A	N/A
15	TWE180E3	1	208	3	3.00	9.4	74.9	11.8	20	N/A	N/A	N/A	N/A	N/A	N/A	N/A	N/A
	TWE180E3	1	230	3	3.00	9.2	74.9	11.5	20	N/A	N/A	N/A	N/A	N/A	N/A	N/A	N/A
	TWE180E3[b]	1	460	3	3.00	4.6	39.3	5.8	15	N/A	N/A	N/A	N/A	N/A	N/A	N/A	N/A
	TWE180EW	1	575	3	3.00	3.4	24.6	4.3	15	N/A	N/A	N/A	N/A	N/A	N/A	N/A	N/A
20	TWE240E3	1	208	3	5.00	14.5	98.0	18.1	25	1	208	3	3.00	9.4	74.9	11.8	20
	TWE240E3	1	230	3	5.00	14.3	98.0	17.9	25	1	230	3	3.00	9.2	74.9	11.5	20
	TWE240E4	1	460	3	5.00	6.7	47.0	8.4	15	1	460	3	3.00	4.6	39.3	5.8	15
	TWE240EW	1	575	3	5.00	5.2	-	6.5	15	1	575	3	3.00	3.4	24.6	4.3	15

Continued on next page

(a) For additional information contact product support.
(b) Field wired for 460V.

Table 5. Unit Wiring — Air Handler — 60Hz

Tons	Unit Model Number	Unit Operating Voltage Range	Minimum Circuit Ampacity	Maximum Fuse or HACR Circuit Breaker Size[a]
5	TWE06D1, E1	187-253	7.5	15
	TWE061D3, E3	187-253	3.1	15
	TWE061D4, E4	414-506	1.5	15
	TWE061DK	342-418	1.4	15
	TWE061DW	518-632	1.6	15
7½	TWE090D1, E1	187-253	8.5	15
	TWE090D3, E3[b]	187-253	6.6	15
	TWE090D3, E3[c]	414-506	3.1	15
	TWE090DK	342-418	3.8	15
	TWE090DW	518-632	2.3	15
10	TWE120D1, E1	187-253	10.6	15
	TWE120D3, E3[b]	187-253	7.8	15
	TWE120D3, E3[c]	414-506	3.6	15
	TWE120DK	342-418	4.1	15
	TWE120DW, EW	518-632	2.9	15
12½	TWE150E3	187-253	7.4	15
	TWE150E3[c]	414-506	3.4	15
	TWE150EK	342-418	4.1	15
	TWE150EW	518-632	2.8	15
15	TWE180E3	187-253	11.8	20
	TWE180E3[c]	414-506	5.8	15
	TWE180EK	342-418	9.8	15
	TWE180EW	518-632	4.3	15
20	TWE240E3	187-253	18.1	25
	TWE240E4	414-506	8.4	15
	TWE240EK	342-418	10.4	15
	TWE240EW	518-632	6.5	15

(a) HACR type circuit breaker per NEC.
(b) When wired for 208-230 volt.
(c) When wired for 460 volt.

Table 4. Electrical Characteristics — High and Ultra-High Static Motors — 60 Hz Air Handler[a]

		High Static Evaporator Fan Motor								Ultra-High Static Evaporator Fan Motor							
						Amps								Amps			
Tons	Unit Model Number	No.	Volts	Phase	Hp	FLA	LRA	MCA	MFS	No.	Volts	Phase	Hp	FLA	LRA	MCA	MFS
5	TWE061D1, E1	1	208	1	1.50	6.8	31.5	8.5	15	N/A	N/A	N/A	N/A	N/A	N/A	N/A	N/A
	TWE061D1, E1	1	230	1	1.50	6.2	31.5	7.8	15	N/A	N/A	N/A	N/A	N/A	N/A	N/A	N/A
	TWE061D3, E3	1	208	3	1.50	5.3	34.3	6.6	15	N/A	N/A	N/A	N/A	N/A	N/A	N/A	N/A
	TWE061D3, E3	1	230	3	1.50	5.0	34.3	6.3	15	N/A	N/A	N/A	N/A	N/A	N/A	N/A	N/A
	TWE061D4, E4	1	460	3	1.50	2.5	17.0	3.1	15	N/A	N/A	N/A	N/A	N/A	N/A	N/A	N/A
	TWE061DW	1	575	3	1.50	1.8	13.6	2.3	15	N/A	N/A	N/A	N/A	N/A	N/A	N/A	N/A
7½	TWE090D1, E1	1	208	1	2.00	8.5	57.4	10.6	15	N/A	N/A	N/A	N/A	N/A	N/A	N/A	N/A
	TWE090D1, E1	1	230	1	2.00	7.7	57.4	9.6	15	N/A	N/A	N/A	N/A	N/A	N/A	N/A	N/A
	TWE090D3, E3	1	208	3	2.00	6.2	33.9	7.8	15	1	208	3	3.00	9.4	74.9	11.8	20
	TWE090D3, E3	1	230	3	2.00	5.8	33.9	7.3	15	1	230	3	3.00	9.2	74.9	11.5	20
	TWE090D3, E3[b]	1	460	3	2.00	2.9	33.9	3.6	15	1	460	3	3.00	4.6	39.3	5.8	15
	TWE090DW	1	575	3	2.00	2.3	14.4	2.9	15	1	575	3	3.00	3.4	24.6	4.3	15
10	TWE120D1, E1	N/A	N/A	N/A	N/A	N/A	N/A	N/A	N/A	N/A	N/A	N/A	N/A	N/A	N/A	N/A	N/A
	TWE120D1, E1	N/A	N/A	N/A	N/A	N/A	N/A	N/A	N/A	N/A	N/A	N/A	N/A	N/A	N/A	N/A	N/A
	TWE120D3, E3	1	208	3	3.00	9.4	74.9	11.8	20	N/A	N/A	N/A	N/A	N/A	N/A	N/A	N/A
	TWE120D3, E3	1	230	3	3.00	9.2	74.9	11.5	20	N/A	N/A	N/A	N/A	N/A	N/A	N/A	N/A
	TWE120D3, E3[b]	1	460	3	3.00	4.6	39.3	5.8	15	N/A	N/A	N/A	N/A	N/A	N/A	N/A	N/A
	TWE120DW, EW	1	575	3	3.00	3.4	24.6	4.3	15	N/A	N/A	N/A	N/A	N/A	N/A	N/A	N/A
12½	TWE150E3	1	208	3	3.00	9.4	74.9	11.8	20	1	208	3	5.00	14.5	98.0	18.1	25
	TWE150E3	1	230	3	3.00	9.2	74.9	11.5	20	1	230	3	5.00	14.3	98.0	17.9	25
	TWE150E3[b]	1	460	3	3.00	4.6	39.3	5.8	15	1	460	3	5.00	6.7	47.0	8.4	15
	TWE150EW	1	575	3	3.00	3.4	24.6	4.3	15	1	575	3	5.00	5.2	-	6.5	15
15	TWE180E3	1	208	3	5.00	14.5	98.0	18.1	25	N/A	N/A	N/A	N/A	N/A	N/A	N/A	N/A
	TWE180E3	1	230	3	5.00	14.3	98.0	17.9	25	N/A	N/A	N/A	N/A	N/A	N/A	N/A	N/A
	TWE180E3[b]	1	460	3	5.00	6.7	47.0	8.4	15	N/A	N/A	N/A	N/A	N/A	N/A	N/A	N/A
	TWE180EW	1	575	3	5.00	5.2	-	6.5	15	N/A	N/A	N/A	N/A	N/A	N/A	N/A	N/A
20	TWE240E3	N/A	N/A	N/A	N/A	N/A	N/A	N/A	N/A	1	208	3	7.50	20	114.0	25.0	35
	TWE240E3	N/A	N/A	N/A	N/A	N/A	N/A	N/A	N/A	1	230	3	7.50	17.6	126.0	22.0	35
	TWE240E4	N/A	N/A	N/A	N/A	N/A	N/A	N/A	N/A	1	460	3	7.50	9.0	61.4	11.3	20
	TWE240EW	N/A	N/A	N/A	N/A	N/A	N/A	N/A	N/A	1	575	3	7.50	7.2	49.8	9.0	15

(a) For additional information contact product support.
(b) Field wired for 460V.

Table 6. Unit Wiring with Electric Heat (Single Point Connection) — 5, 7½ and 10 Ton Air Handlers — 60 Hz

Tons	Used With	Heater Model No.	Maximum Fuse Heater KW Rating[a]	Unit Power Supply	Control Stages	Minimum Circuit Ampacity[b]	Maximum Fuse or HACR Circuit Breaker Size[b][c]
5	TWE061D1 TWE061E1	BAYHTRL106A	4.33/5.76	208-230/1/60	1	33/37	35/40
		BAYHTRL112A	8.65/11.52		1	59/67	60/70
		BAYHTRL117A	12.98/17.28		1	85/97	90/100
		BAYHTRL123A	17.30/23.04		2	111/127[d]	125/150
7½	TWE090D1 TWE090E1	BAYHTRL106A	4.33/5.76	208-230/1/60	1	34/38	35/40
		BAYHTRL112A	8.65/11.52		1	60/68[d]	60/70
		BAYHTRL117A	12.98/17.28		1	86/98	90/100
		BAYHTRL123A	17.30/23.04		2	112/128[d]	125/150
		BAYHTRL129A	21.65/28.80		2	138/158[d]	150/175
10	TWE120D1 TWE120E1	BAYHTRL106A	4.33/5.76	208-230/1/60	1	37/41	40/45
		BAYHTRL112A	8.65/11.52		1	63/71[d]	70/80
		BAYHTRL117A	12.98/17.28		1	89/101	90/110
		BAYHTRL123A	17.30/23.04		2	115/131[d]	125/150
		BAYHTRL129A	21.65/28.80		2	141/161[d]	150/175
5	TWE061D3 TWE061E3	BAYHTRL305A	3.75/5.00	208-230/3/60	1	17/19	20/20
		BAYHTRL310A	7.45/9.96		1	30/34	30/35
		BAYHTRL315A	11.25/14.96		1	43/49	45/50
		BAYHTRL325A	18.71/24.92		2	69/79[d]	70/80
7½	TWE090D3 TWE090E3	BAYHTRL305A	3.75/5.00	208-230/3/60	1	20/22	20/25
		BAYHTRL310A	7.45/9.96		1	33/37	35/40
		BAYHTRL315A	11.25/14.96		1	46/52	50/60
		BAYHTRL325A	18.71/24.92		2	72/82[d]	80/90
		BAYHTRL335A	26.20/34.88		2	97/112[e]	100/125
10	TWE120D3 TWE120E3	BAYHTRL305A	3.75/5.00	208-230/3/60	1	21/23	25/25
		BAYHTRL310A	7.45/9.96		1	34/38	35/40
		BAYHTRL315A	11.25/14.96		1	47/53	50/60
		BAYHTRL325A	18.71/24.92		2	73/83[d]	80/90
		BAYHTRL335A	26.20/34.88		2	98/113[e]	100/125
5	TWE061D4 TWE061E4	BAYHTRL405A	5	460/3/60	1	10	15
		BAYHTRL410A	9.96		1	17	20
		BAYHTRL415A	14.96		1	25	25
		BAYHTRL425A	24.92		2	40	40
7½	TWE090D3[f] TWE090E3[f]	BAYHTRL405A	5	460/3/60	1	11	15
		BAYHTRL410A	9.96		1	19	20
		BAYHTRL415A	14.96		1	26	30
		BAYHTRL425A	24.92		2	41	45
		BAYHTRL435A	34.88		2	56	60
10	TWE120D3[f] TWE120E3[f]	BAYHTRL405A	5	460/3/60	1	12	15
		BAYHTRL410A	9.96		1	20	20
		BAYHTRL415A	14.96		1	27	30
		BAYHTRL425A	24.92		2	42	45
		BAYHTRL435A	34.88		2	57	60

Table 6. Unit Wiring with Electric Heat (Single Point Connection) — 5, 7½ and 10 Ton Air Handlers — 60 Hz

Tons	Used With	Heater Model No.	Maximum Fuse Heater KW Rating[a]	Unit Power Supply	Control Stages	Minimum Circuit Ampacity[b]	Maximum Fuse or HACR Circuit Breaker Size[b][c]
5	TWE061DW	BAYHTRLW05A	5	575/3/60	1	8	15
		BAYHTRLW10A	9.96		1	15	15
		BAYHTRLW15A	14.96		1	21	25
		BAYHTRLW25A	24.92		2	33	35
7½	TWE090DW	BAYHTRLW05A	5	575/3/60	1	11	15
		BAYHTRLW10A	9.96		1	17	20
		BAYHTRLW15A	14.96		1	23	25
		BAYHTRLW25A	24.92		2	36	40
		BAYHTRLW35A	34.88		2	48	50
10	TWE120DW TWE120EW	BAYHTRLW05A	5	575/3/60	1	10	15
		BAYHTRLW10A	9.96		1	16	20
		BAYHTRLW15A	14.96		1	22	25
		BAYHTRLW25A	24.92		2	35	35
		BAYHTRLW35A	34.88		2	47	50

(a) kW ratings are at: 208/240V for 208-230V air handlers.
480V for 460V air handlers
600V for 575V air handlers
For other than rated voltage, capacity = (Voltage/Rated Voltage)^2 x Rated Capacity.
(b) Any power supply and circuits must be wired and protected in accordance with local codes.
(c) The HACR circuit breaker is for U.S.A. installations only.
(d) Field wire must be rated at least 75°C.
(e) Field wire must be rated at least 90°C.
(f) With motor field converted to 460V.

Table 7. Unit Wiring with Electric Heat (Single Point Connection) — 12½ - 20 Ton Air Handlers

Tons	Used With	Heater Model No.	Heater KW Rating[a]	Unit Power Supply	Control Stages	Minimum Circuit Ampacity[b]	Maximum Fuse or HACR Circuit Breaker Size[b][c]
12½	TWE150E3	BAYHTRM310A	7.50/10.00	208-230/3/60	1	33/37	35/40
		BAYHTRM320A	14.96/19.92		1	59/67	60/70
		BAYHTRM330A	22.50/29.92		2	85/97	90/100
		BAYHTRM350A	37.42/49.84		2	137/157	150/175
15	TWE180E3	BAYHTRM310A	7.50/10.00	208-230/3/60	1	38/42	40/45
		BAYHTRM320A	14.96/19.92		1	64/72	70/80
		BAYHTRM330A	22.50/29.92		2	90/102	90/110
		BAYHTRM350A	37.42/49.84		2	142/162[d]	150/175
20	TWE240E3	BAYHTRM310A	7.50/10.00	208-230/3/60	1	45/49	50/50
		BAYHTRM320A	14.96/19.92		1	71/79	80/80
		BAYHTRM330A	22.50/29.92		2	97/109	100/110
		BAYHTRM350A	37.42/49.84		2	149/169[d]	150/175
12½	TWE150E3[e]	BAYHTRM410A	10	460/3/60	1	19	20
		BAYHTRM420A	19.92		1	34	35
		BAYHTRM430A	29.92		2	49	50
		BAYHTRM450A	49.84		2	79	80
15	TWE180E3[e]	BAYHTRM410A	10	460/3/60	1	21	25
		BAYHTRM420A	19.92		1	36	40
		BAYHTRM430A	29.92		2	51	60
		BAYHTRM450A	49.84		2	81	90
20	TWE240E4	BAYHTRM410A	10	460/3/60	1	24	25
		BAYHTRM420A	19.92		1	39	40
		BAYHTRM430A	29.92		2	54	60
		BAYHTRM450A	49.84		2	84	90
12½	TWE150EW	BAYHTRMW10A	10	575/3/60	1	15	20
		BAYHTRMW20A	19.92		1	27	30
		BAYHTRMW30A	29.92		2	39	40
		BAYHTRMW50A	49.84		2	63	70
15	TWE180EW	BAYHTRMW10A	10	575/3/60	1	17	20
		BAYHTRMW20A	19.92		1	30	30
		BAYHTRMW30A	29.92		2	42	45
		BAYHTRMW50A	49.84		2	67	70
20	TWE240EW	BAYHTRMW10A	10	575/3/60	1	20	25
		BAYHTRMW20A	19.92		1	32	35
		BAYHTRMW30A	29.92		2	45	45
		BAYHTRMW50A	49.84		2	70	70

(a) kW ratings are at: 208/240V for 208-230V air handlers.
480V for 460V air handlers
600V for 575V air handlers
For other than rated voltage, capacity = (Voltage/Rated Voltage)^2 x Rated Capacity.
(b) Any power supply and circuits must be wired and protected in accordance with local codes.
(c) The HACR circuit breaker is for U.S.A. installations only.
(d) Field wire must be rated at least 90°C.
(e) With motor field wired for 460V.

Table 8. Electrical Characteristics — Standard Motor — 50 Hz Air Handler

Tons	Unit Model Number	Standard Evaporator Fan Motor				
		No.	Volts	Phase	Amps	
					FLA	LRA
4.5	TWE051DD, ED	1	380	3	1.4	8.0
		1	415	3	1.0	8.36
6.25	TWE076DD, ED	1	380	3	3.1	17
		1	415	3	3.2	16.8
8.33	TWE101DD, ED	1	380	3	3.4	17.3
		1	415	3	3.2	19
10.4	TWE126ED	1	380	3	3.2	35
		1	415	3	3.1	35
13.0	TWE156ED	1	380	3	4.0	33.1
		1	415	3	4.0	36.1
16.7	TWE201ED	1	380	3	7.8	40
		1	415	3	7.6	45

Table 9. Unit Wiring — Air Handler — 50 Hz

Tons	Unit Model No.	Minimum Unit Operating Voltage Range	Maximum Fuse Circuit Ampacity	Size or Maximum Circuit Breaker
4.5	TWE051DD	380/415	4	15
6.25	TWE076DD	380/415	5	15
8.33	TWE101DD, ED	380/415	5	15
10.4	TWE126ED	380/415	5	15
13.0	TWE156ED	380/415	6	15
16.7	TWE201ED	380/415	10	15

Table 10. Unit Wiring With Electric Heat (Single Point Connection) — Air Handlers[a][b]

Heater Model No.	Heater kW Rating[c]	To Use with Unit	Control Stages	Minimum Circuit Ampacity [d]	Maximum Fuse Breaker Size 2
BAYHTRL405A	5.00	TWE051DD	1	13	15
BAYHTRL410A	9.96		1	22	25
BAYHTRL415A	14.96		1	31	35
BAYHTRL425A	24.92		2	49	50
BAYHTRL405A	5.00	TWE076DD	1	14	15
BAYHTRL410A	9.96		1	23	25
BAYHTRL415A	14.96		1	32	35
BAYHTRL425A	24.92		2	50	50
BAYHTRL435A	34.88		2	68	70
BAYHTRL405A	5.00	TWE101DD, TWE101ED	1	14	15
BAYHTRL410A	9.96		1	23	25
BAYHTRL415A	14.96		1	32	35
BAYHTRL425A	24.92		2	50	50
BAYHTRL435A	34.88		2	68	70
BAYHTRM410A	10.00	TWE126ED	1	19	20
BAYHTRM420A	19.92		1	41	45
BAYHTRM430A	24.92		2	59	60
BAYHTRM450A	49.84		2	94	100
BAYHTRM410A	10.00	TWE156ED	1	23	25
BAYHTRM420A	19.92		1	41	45
BAYHTRM430A	24.92		2	59	60
BAYHTRM450A	49.84		2	95	100
BAYHTRM410A	10.00	TWE201ED	1	29	30
BAYHTRM420A	19.92		1	46	50
BAYHTRM430A	24.92		2	65	70
BAYHTRM450A	49.84		2	100	100

(a) Field wire must be rated at least 167°F (75°C).
(b) Field wire must be rated at least 194°F (90°C).
(c) kW ratings are at 400v for 3 phase, 400v air handlers
For other than rated voltage,
Capacity = (Voltage/Rated Voltage)^2 x Rated Capacity and kW = (Voltage/Rated Voltage)^2 Rated kW.
(d) Any power supply and circuits must be wired and protected in accordance with local codes. MCA and Maximum Fuse Size is based on 400V.

Installation

Horizontal Suspension

If the air handler will be suspended, use a suspension mounting kit to isolate the unit from the structure. This is usually accomplished through the use of spring or rubber isolators, which are offered as an accessory. Mounting rods must be field supplied. Isolator selection is dependent upon total unit weight including accessories. Approximate unit weights are provided in Table 1 and Table 2, p. 7.

NOTICE
Equipment Damage!

Before hanging the unit on suspension rods, reinforce the cabinet around the suspension holes by using a large washer inside the cabinet. Washers should be between the skin of the air handler and the nut on the suspension rod.

Align holes in the cabinet with structural supports and secure suspension rods to the structure, then to the air handler cabinet. If hole locations do not permit proper alignment with existing structure, it may be necessary to field fabricate cross members on existing structural beams.

Note: *When other than bottom return is to be used, side panel removed for return duct installation must be secured over the bottom opening.*

Leveling

This air handler has a double sloped drain pan. In order to assure proper drainage along the length of the drain pan, it is important to have the unit properly leveled. Be sure the air handler is level.

Auxiliary Drain Pan

A field fabricated, auxiliary drain pan should be installed under the unit for all horizontal applications and when air handlers are installed above ceilings or in other locations where condensate overflow may cause damage. This drain pan will eliminate any excess condensation that may be due to extreme humidity or an obstructed drain in the primary drain pan. Drain lines from this pan must be installed, but should not be connected to the primary drain line from the unit. Isolate the auxiliary drain pan from both the air handler and the structure.

⚠ WARNING
Fiberglass Wool!

Product contains fiberglass wool. Disturbing the insulation in this product during installation, maintenance or repair will expose you to airborne particles of glass wool fibers and ceramic fibers known to the state of California to cause cancer through inhalation. Glass wool fibers may also cause respiratory, skin or eye irritation.

Precautionary Measures

- Avoid breathing fiberglass dust.
- Use a NIOSH approved dust/mist respirator.
- Avoid contact with the skin or eyes. Wear long-sleeved, loose-fitting clothing, gloves, and eye protection.
- Wash clothes separately from other clothing: rinse washer thoroughly.
- Operations such as sawing, blowing, tear-out, and spraying may generate fiber concentrations requiring additional respiratory protection. Use the appropriate NIOSH approved respirator in these situations.

First Aid Measures

Eye Contact - Flush eyes with water to remove dust. If symptoms persist, seek medical attention.

Skin Contact - Wash affected areas gently with soap and warm water after handling.

Refrigerant Piping

Installation, brazing, leak testing and evacuation of refrigerant lines are covered in the installation instructions packaged with the outdoor unit. Read the instructions before beginning installation of refrigerant lines.

Locate cloth bag(s) attached to the refrigerant tube of the coil that contains a stainless steel clamp and insulation material (approximately 9" long by 4" wide) for each refrigerant circuit. This is for attaching and insulating the expansion valve bulb (s) to the suction line(s).

On air handlers that will have refrigerant lines entering the cabinet from the left side, remove the split rubber grommet from the knockout in the end of the air handler. Uncoil the cap tube with the bulb attached at the expansion valve and place the grommet on the cap tube. With the grommet around the tube, push the bulb through the hole and position the grommet back into its original position (one bulb and cap tube on single circuit units and two bulbs and cap tubes on dual circuit units).

Attach the bulb(s) on a horizontal section of tube where the entire length of the bulb is in contact with the tube, (see Figure 14, p. 31) approximately 45 degrees off vertical (a 10 or 2 o'clock position), 10 to 12 inches outside of the air handler.

On air handlers that will have refrigerant lines entering the cabinet from the right side, the bulb(s) should be attached to the suction tube(s) inside the cabinet in the same manner as above, approximately 10" from the right end of the unit.

After attaching to the suction line(s), either inside or outside of the cabinet, wrap the insulation around the bulb(s) and suction tube(s). Refrigerant piping should be insulated.

Figure 14. Remote Bulb Installation

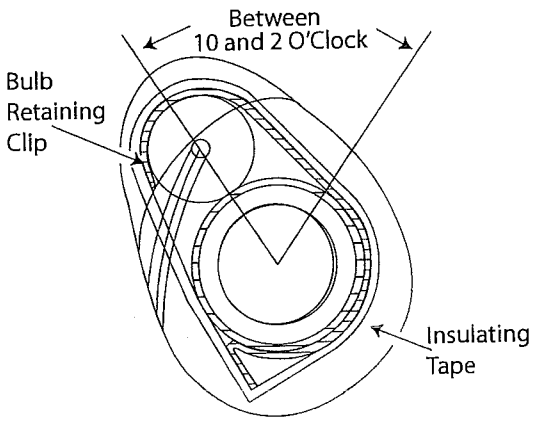

NOTICE

Equipment Damage!

Ensure that the refrigerant lines passing through the cabinet are not resting on sharp sheet metal edges and that the bulb(s) are attached to the suction line of the same circuit.

Condensate Piping

The drain pan condensate connection is a female slip joint type for 1" Schedule 40 PVC pipe. Use PVC cement and tubing as required (field supplied) to construct a trap. A union or flexible tubing and clamps may be installed if the drain pan is to be removed periodically for cleaning.

Important: *When air handler is installed in the vertical position and close proximity trapping of condensate is required, use of a subbase accessory to raise the air handler for clearance of the drain trap is recommended. See Figure 15 for a typical drain trap assembly.*

Figure 15. Typical Drain Trap Assembly

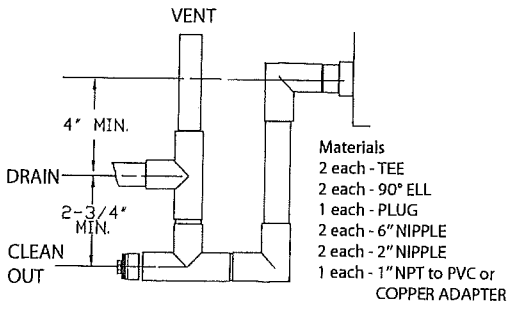

Filters

Air handlers are shipped with throwaway filters installed. For replacement filters consult the air handler service facts for correct size and number.

To replace filters from the end of the unit, remove lower access panel (either end) and slide old filters out and replace with new ones. To replace from the front of the unit, remove one "L" shaped angle. Remove and replace filters and reinstall "L" shaped angle. See Figure 16.

To convert from 1" filter to a 2" filter on units so equipped, remove lower access panels from both ends of the air handler. Remove screws and rotate the "L" shaped angles from both the top and bottom of the filter track 180° to increase the width of the filter opening.

Figure 16. Filter Replacement

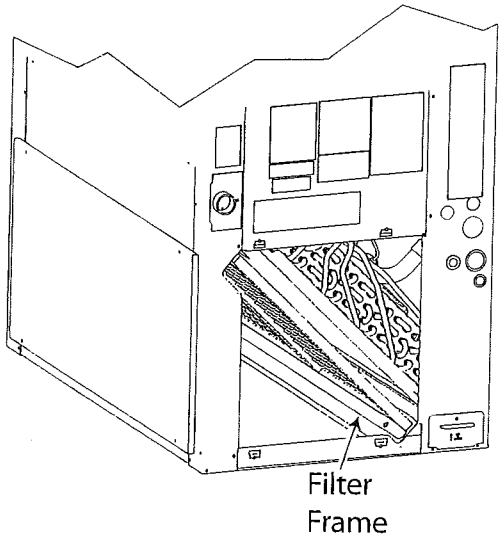

Duct Connections

The supply and return ducts should be connected to the unit with flame retardant duct connectors to reduce vibration transmission. The return duct should be sized to the same dimensions as the return inlet of the unit.

Important: *Duct flanges are provided for attachment of the duct work and are packaged on the outside of the cabinet for TWE150, 180 and 240 and TWE126, 156 and 201. The duct flanges are fastened to the top coil support bracket in the TWE051, 061, 076, 090, 101 and 120 models.*

Air Flow Settings

Unit is shipped for nominal airflow with nominal static pressure. Please refer to fan performance table in either the product catalog or unit service facts and select the proper drive package for each application. Failure to do so could result in improper airflow causing coil frosting or condensate management problems. Condensate management problems such as water blow off could be the

result of too great of air face velocity across the coil. To ensure proper operation refer to fan belt adjustment procedures, p. 38.

Electrical Connections

⚠WARNING
Hazardous Voltage w/Capacitors!

Disconnect all electric power, including remote disconnects and discharge all motor start/run capacitors before servicing. Follow proper lockout/tagout procedures to ensure the power cannot be inadvertently energized. For variable frequency drives or other energy storing components provided by Trane or others, refer to the appropriate manufacturer's literature for allowable waiting periods for discharge of capacitors. Verify with an appropriate voltmeter that all capacitors have discharged. Failure to disconnect power and discharge capacitors before servicing could result in death or serious injury.

⚠WARNING
Grounding Required!

Follow proper local and state electrical code on requirements for grounding. Failure to follow code could result in death or serious injury.

1. All electrical lines, sizing, protection, and grounding must be in accordance with the National Electric Code and local codes.
2. Isolate conduit whenever vibration transmission may cause a noise problem within the building structure.
3. Ensure all connections are tight and no wires exposed.
4. All accessories must be installed and wired according to the instructions packaged with that accessory.

For air handler power entry only, or for dual power entry (power entry for air handler and power entry for electric heats), the electrical connections are made in the fan control box located in the right side of the air handler and electric heater respectively. Wiring entrance is through holes provided in the end of the air handler cabinet, Figure 17. Breaker or fuse size can be selected using the nameplates attached to the unit and electric heater (see Table 6, p. 25).

Figure 17. Electrical Entries

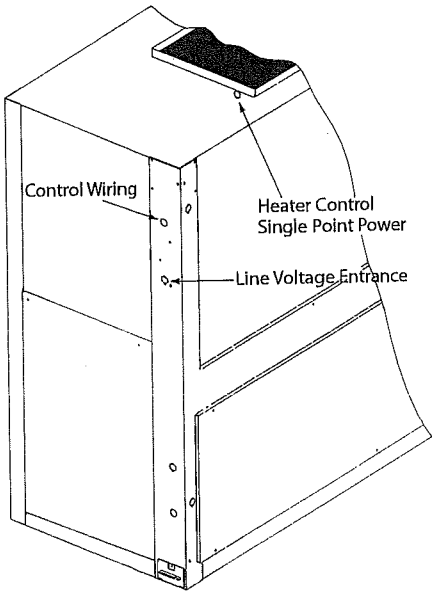

Table 11. Recommended T'stat Wire Size

Wire Size (Gauge)	Maximum Wire Length Physical distance between Unit & T'stat
22	30 Feet
20	50 Feet
18	75 Feet
16	125 Feet
14	200 Feet

Checkout Procedure

Complete the following "installation checklist" once installation of field wiring connections is complete. All operational checks (unit running) must be made after the outdoor unit is installed and system interconnection is complete.

Installation Checklist

⚠WARNING

Hazardous Voltage!

Disconnect all electric power, including remote disconnects before servicing. Follow proper lockout/tagout procedures to ensure the power can not be inadvertently energized. Failure to disconnect power before servicing could result in death or serious injury.

Complete this checklist once the unit is installed to verify that all recommended procedures have been accomplished before the system is started. Operational checks cannot be performed until the outdoor unit is installed and system interconnection is complete.

1. Verify that the unit electrical power is disconnected.
2. Inspect all field wiring connections. All connections should be clean and tight.
3. Inspect unit ground connection(s). Ground must comply with all applicable codes.
4. Inspect unit suspension arrangement (if used). Unit position must be secure. Remove any tools or debris found in or near the unit.
5. Inspect duct outlets. Outlets must be open and unrestricted.
6. Inspect unit drain lines. Pipe connections must be tight and drain line unrestricted.
7. Inspect fan assembly to insure all moving parts move freely.
8. If unit is horizontally mounted, make sure secondary drain pan has been installed.
9. Inspect unit for proper filters, securely installed and not touching the coil surface. All cabinet panels must be secure.
10. Instruct owner/operator on proper system operating and maintenance procedure.

Electrical Wiring

⚠WARNING

Hazardous Voltage w/Capacitors!

Disconnect all electric power, including remote disconnects and discharge all motor start/run capacitors before servicing. Follow proper lockout/tagout procedures to ensure the power cannot be inadvertently energized. For variable frequency drives or other energy storing components provided by Trane or others, refer to the appropriate manufacturer's literature for allowable waiting periods for discharge of capacitors. Verify with an appropriate voltmeter that all capacitors have discharged. Failure to disconnect power and discharge capacitors before servicing could result in death or serious injury.

Note: *For additional information regarding the safe discharge of capacitors, see PROD-SVB06A-EN or PROD-SVB06A-FR*

⚠ WARNING

Grounding Required!

Follow proper local and state electrical code on requirements for grounding. Failure to follow code could result in death or serious injury.

Thermostat and Control Connections for Electromechanical Controls

Wiring shown with dashed lines is to be furnished and installed by the customer. All customer-supplied wiring must be copper only and must conform to NEC and local electrical codes. Codes may require line of sight between disconnect switch and unit.

1. Observe all notes on the wiring diagrams.
2. Mount the thermostat in the desired location.
3. Install color coded low voltage cables between outdoor unit, indoor unit and thermostat.
4. Connect low voltage control wiring to the low voltage terminal board located on the side of the fan control box per the typical interconnecting wiring diagrams.

Note: *When electric heater accessory is used, single point power entry or dual point power entry is field optional. Single point power entry option is through electric heater only.*

Figure 18. Thermostat and Control Connections — Electromechanical Controls

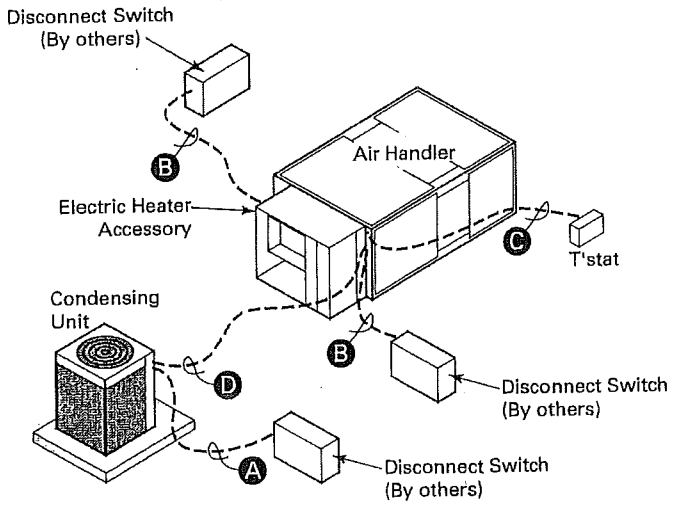

60 Hz - TTA/TWE

TTA073D/TWE090D	TTA150E/TWE150E	(2) TTA073D/TWE150E
TTA090D/TWE090D	TTA180E/TWE180E	(2) TTA090D/TWE180E
TTA090D/TWE120D	TTA180F/TWE180E[a]	(2) TTA120D/TWE240E
TTA120D/TWE120D	TTA180E/TWE240E	(2) TTA120F/TWE240E
TTA120E/TWE120E	TTA240E/TWE240E	
TTA120F/TWE120D	TTA240F/TWE240E[a]	

50 Hz - TTA/TWE

TTA061DD/TWE076DD	TTA101FD/TWE101DD	TTA201FD/TWE201ED[a]
TTA076DD/TWE076DD	TTA126ED/TWE126ED	(2) TTA061DD/TWE126ED
TTA076DD/TWE101DD	TTA156ED/TWE156ED	(2) TTA076DD/TWE156ED
TTA086DD/TWE101DD	TTA156FD/TWE156ED[a]	(2) TTA101DD/TWE201ED
TTA101DD/TWE101DD	TTA156ED/TWE201ED	(2) TTA101FD/TWE201ED
TTA101ED/TWE101ED	TTA201ED/TWE201ED	

(a) Need to manifold the dual circuit indoor unit when connecting to a Manifolded outdoor unit.

Continued on next page

Field Wiring:

A. 3 power wires. Line voltage for 3 phase (2 wires for single phase)

B. 3 power wires. Line voltage for 3 phase (2 wires for single phase)

C. **Cooling only thermostat**: 3 to 7 wires depending on stages of electric heat

D. 3 to 7 wires depending on type of outdoor unit(s)

Thermostat and Control Connections for ReliaTel™ Controls

Wiring shown with dashed lines is to be furnished and installed by the customer. All customer-supplied wiring must be copper only and must conform to NEC and local electrical codes. Codes may require line of sight between disconnect switch and unit.

1. Observe all notes on the wiring diagrams.
2. Mount the thermostat in the desired location.
3. Install color coded low voltage cables between outdoor unit, indoor unit and thermostat.
4. Connect low voltage control wiring to the low voltage terminal board located on the side of the fan control box per the typical interconnecting wiring diagrams.

Notes:

1. When electric heater accessory is used, single point power entry or dual point power entry is field optional. Single point power entry option is through electric heater only.
2. ***Choose only one of the following; Thermostat, Zone Sensor, or NSB Panel.

Figure 19. Thermostat and Control Connections — ReliaTel™ Controls

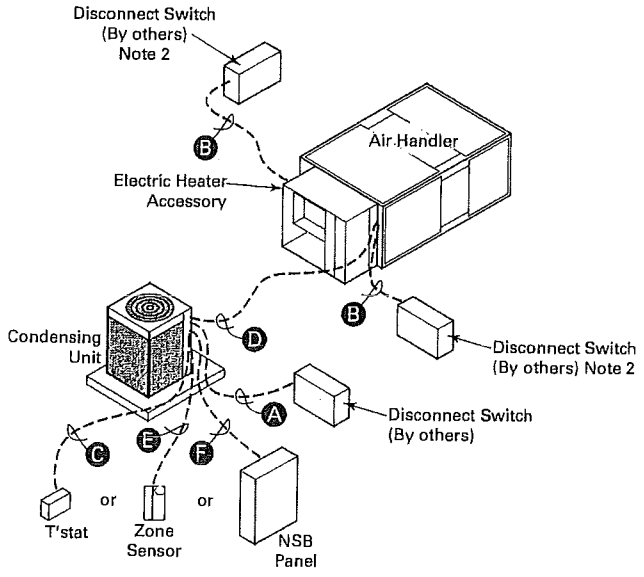

60 Hz - TTA/TWE

TTA073D/TWE090D	TTA150E/TWE150E	(2) TTA073D/TWE150E
TTA090D/TWE090D	TTA180E/TWE180E	(2) TTA090D/TWE180E
TTA090D/TWE120D	TTA180F/TWE180E[a]	(2) TTA120D/TWE240E
TTA120D/TWE120D	TTA180E/TWE240E	(2) TTA120F/TWE240E
TTA120E/TWE120E	TTA240E/TWE240E	
TTA120F/TWE120D	TTA240F/TWE240E[a]	

Continued on next page

50 Hz - TTA/TWE

TTA061DD/TWE076DD	TTA101FD/TWE101DD	TTA201FD/TWE201ED[a]
TTA076DD/TWE076DD	TTA126ED/TWE126ED	(2) TTA061DD/TWE126ED
TTA076DD/TWE101DD	TTA156ED/TWE156ED	(2) TTA076DD/TWE156ED
TTA086DD/TWE101DD	TTA156FD/TWE156ED[a]	(2) TTA101DD/TWE201ED
TTA101DD/TWE101DD	TTA156ED/TWE201ED	(2) TTA101FD/TWE201ED
TTA101ED/TWE101ED	TTA201ED/TWE201ED	

60 Hz - TWA/TWE

TWA073D/TWE090D	TWA180E/TWE180E	(2) TWA090D/TWE180E
TWA090D/TWE090D	TWA240E/TWE240E	(2) TWA120D/TWE240E
TWA120D/TWE120D	(2) TWA073D/TWE150E	

50 Hz - TWA/TWE

TWA061DD/TWE076DD	TWA101DD/TWE101DD	TWA201ED/TWE201ED
TWA076DD/TWE076DD	TWA156ED/TWE156ED	

(a) Need to manifold the dual circuit indoor unit when connecting to a Manifolded outdoor unit.

Field Wiring:

A. 3 power wires, line voltage for 3 phase, (2 power wires for single phase)

B. 3 power wires, line voltage for 3 phase, (2 power wires for single phase)

C. **Cooling only thermostat**: 3 to 7 wires depending on stages of electric heat
Zone Sensor: 4 to 10 wires depending on zone sensor model [1]

D. 3 to 7 wires depending on type of outdoor unit(s).

[1] See Zone Sensor wiring instructions for wiring information (ReliaTel Controls only).

Maintenance

Perform all of the indicated maintenance procedures at the intervals scheduled. This will prolong the life of the unit and reduce the possibility of costly equipment failure.

Fan Belt Adjustment

⚠WARNING
Rotating Components!

Disconnect all electric power, including remote disconnects before servicing. Follow proper lockout/tagout procedures to ensure the power can not be inadvertently energized. Failure to disconnect power before servicing could result in death or serious injury.

The fan belts must be inspected periodically to assure proper unit operation.

Replacement is necessary if the belts appear frayed or worn.

When removing or installing the new belts, do not stretch them over the sheaves. Loosen the belts using the belt tension adjustment bolts on the motor mounting base.

Once the new belts are installed, using a Browning or Gates tension gauge (or equivalent) illustrated in Figure 20; adjust the belt tension as follows;

1. To determine the appropriate belt deflection;
   a. Measure the center-to-center shaft distance (in inches) between the fan and motor sheaves.
   b. Divide the distance measured in Step 1a by 64; the resulting value represents the amount of belt deflection that corresponds to the proper belt tension.
2. Set the large O-ring on the belt tension gauge at the deflection value determined in Step 1b.
3. Set the small O-ring at zero on the force scale of the gauge plunger.
4. Place the large end of the gauge at the center of the belt span; then depress the gauge plunger until the large O-ring is even with the top of the next belt or even with a straightedge placed across the fan and motor sheaves.
5. Remove the belt tension gauge. The small O-ring now indicates a number other than zero on the plunger's force scale. This number represents the force (in pounds) required to give the needed deflection.
6. Compare the "force" scale reading (Step 5) with the appropriate "force" value listed in Table 12, p. 39. If the "force" reading is outside the range, readjust the belt tension.

Note: *Actual belt deflection "force" must not exceed the maximum "force" value shown in* Figure 20.

Recheck the belt tension at least twice during the first 2 to 3 days of operation. Belt tension may decrease until the new belts are "run in".

Figure 20. Belt tension gauge

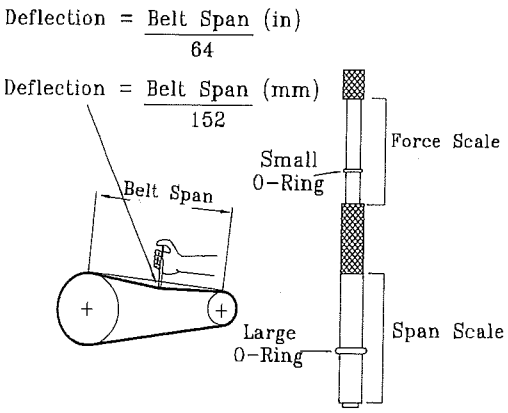

Table 12. Belt Tension Measurement and Deflection

Belts Cross Section	Small Pitch Diameter Range	Deflection Force (Lbs.)			
		Standard V-Belt		V-Belt with Molded Notches	
		Min.	Max.	Min.	Max.
A	3.0 - 3.6	3	4 1/2	3 7/8	5 1/2
	3.8 - 4.8	3 1/2	5	4 1/2	6 1/4
	5.0 - 7.0	4	5 1/2	5	6 7/8
B	3.4 - 4.2	4	5 1/2	5 3/4	8
	4.4 - 5.6	5 1/8	7 1/8	6 1/2	9 1/8
	5.8 - 8.8	6 3/8	8 3/4	7 3/8	10 1/8

Monthly

Conduct the following maintenance inspections once per month.

The following warning complies with State of California law, Proposition 65.

⚠ WARNING
Fiberglass Wool!

Product contains fiberglass wool. Disturbing the insulation in this product during installation, maintenance or repair will expose you to airborne particles of glass wool fibers and ceramic fibers known to the state of California to cause cancer through inhalation. Glass wool fibers may also cause respiratory, skin or eye irritation.

⚠ WARNING
Hazardous Voltage w/Capacitors!

Disconnect all electric power, including remote disconnects and discharge all motor start/run capacitors before servicing. Follow proper lockout/tagout procedures to ensure the power cannot be inadvertently energized. For variable frequency drives or other energy storing components provided by Trane or others, refer to the appropriate manufacturer's literature for allowable waiting periods for discharge of capacitors. Verify with an appropriate voltmeter that all capacitors have discharged. Failure to disconnect power and discharge capacitors before servicing could result in death or serious injury.

NOTICE
Operating Under Vacuum

Do not operate or apply power to the compressor while under a vacuum. Failure to follow these instructions will result in compressor failure.

1. Inspect air filters and clean (or replace) if necessary.
2. Check unit wiring to ensure all connections are tight and that the wiring insulation is intact.
3. Check drain pans and condensate piping to insure they are free of obstacles.
4. Manually rotate the indoor fan to ensure proper operation.
5. Inspect the evaporator coils for dirt and debris. If the coils appear dirty, clean them.
6. Observe indoor fan operation and correct any unusual or excessive vibration. Clean blower wheels as needed.

Annually (Cooling Season)

The following maintenance procedures must be performed at the beginning of each cooling season to ensure efficient unit operation.

1. Perform all of the monthly maintenance inspections.
2. With the unit operating, check unit superheat and record the reading in the "Maintenance Log."
3. Remove any accumulation of dust and/or dirt from the unit casing.
4. Remove corrosion from any surface and repaint. Check the gasket around the control panel door to ensure it fits correctly and is in good condition to prevent water leakage.
5. Inspect the evaporator fan belt. If it is worn or frayed, replace it.
6. Inspect the control panel wiring to ensure that all connections are tight and that the insulation is intact.
7. Check refrigerant piping and fittings for leaks.
8. Inspect the evaporator coils for dirt and debris. If the coils appear dirty, clean them.

Coil Cleaning

Regular coil maintenance, including annual cleaning-enhances the unit's operating efficiency by minimizing:

- compressor head pressure and amperage draw;
- water carryover;
- fan brake horsepower and
- static pressure losses.

At least once each year-or more often if the unit is located in a "dirty" environment-clean the coil using the instructions outlined below. Be sure to follow these instructions as closely as possible to avoid damaging the coils. To clean refrigerant coils, use a soft brush and a sprayer. Contact your local Parts Center for appropriate detergents.

1. Remove enough panels from the unit to gain safe access to coil.

⚠WARNING
No Step Surface!

Do not walk on the sheet metal base. Walking on the base could cause the supporting metal to collapse. Failure of the base could result in death or serious injury.

2. Straighten any bent coil fins with a fin comb.
3. Remove loose dirt and debris from both sides of the coil with a soft brush.
4. Mix the detergent with water according to the manufacturer's instructions. If desired, heat the solution to 150° F maximum to improve its cleansing capability.
5. Pour the cleaning solution into the sprayer.
6. Spray the leaving-airflow side of the coil first; then spray the opposite side of the coil. Allow the cleaning solution to stand on the coil for five minutes.
7. Rinse both sides of the coil with cool, clean water.
8. Inspect both sides of the coil; if it still appears to be dirty, repeat Steps 7 and 8.
9. Reinstall all of the components and panels removed in Step 1; then restore power to the unit.
10. Using a fin comb, straighten any coil fins that were inadvertently bent during the cleaning process.

Precautionary Measures

- Avoid breathing fiberglass dust.
- Use a NIOSH approved dust/mist respirator.
- Avoid contact with the skin or eyes. Wear long-sleeved, loose-fitting clothing, gloves, and eye protection.
- Wash clothes separately from other clothing: rinse washer thoroughly.
- Operations such as sawing, blowing, tear-out, and spraying may generate fiber concentrations requiring additional respiratory protection. Use the appropriate NIOSH approved respirator in these situations.

First Aid Measures

Eye Contact - Flush eyes with water to remove dust. If symptoms persist, seek medical attention.

Skin Contact - Wash affected areas gently with soap and warm water after handling.

Maintenance Log

Date	Ambient Temp. (°F)	Evaporator Entering Air		Compressor				Superheat (°F) (at compressor)		Subcooling (°F) (at service valve)	
		Dry Bulb	Wet Bulb	Suction Pressure		Discharge Pressure					
				(C1)	(C2)	(C1)	(C2)	Circuit #1	Circuit #2	Circuit #1	Circuit #2

Note: Perform each inspection once per month (during cooling season) while unit is operating

Warranty

Central Air Conditioner

TWE

This warranty is extended by Trane to the original purchaser and to any succeeding owner of the real property to which the Air Conditioner is originally affixed, and applies to products purchased and retained for use within the U.S.A. and Canada. There is no warranty against corrosion, erosion or deterioration.

Warrantor warrants for a period of 12 months from initial start-up or 18 months from date of shipment, whichever is less, that the products covered by this warranty (1) are free from defects in material and manufacture, and (2) have the capacities and ratings set forth in catalogs and bulletins; provided, that no warranty is made against corrosion, erosion or deterioration. Warrantor's obligations and liabilities under this warranty are limited to furnishing, F.O.B. factory replacement parts (or equipment at the option of Warrantor) for all Warrantor's products not conforming to this warranty. Warrantor shall not be obligated to pay for the cost of lost refrigerant. No liability whatever shall attach to Warrantor until said products have been paid for and then said liability shall be limited to the purchase price of the equipment shown to be defective.

THE WARRANTY AND LIABILITY SET FORTH HEREIN ARE IN LIEU OF ALL OTHER WARRANTIES AND LIABILITIES, WHETHER IN CONTRACT OR IN NEGLIGENCE, EXPRESS OR IMPLIED, IN LAW OR IN FACT, INCLUDING IMPLIED WARRANTIES OF MERCHANTABILITY AND FITNESS FOR PARTICULAR USE, AND IN NO EVENT SHALL WARRANTOR BE LIABLE FOR ANY INCIDENTAL OR CONSEQUENTIAL DAMAGES.

Some states do not allow limitations on how long an implied warranty lasts or do not allow the exclusion or limitation of incidental or consequential damages, so the above limitation or exclusion may not apply to you. This warranty gives you specific legal rights, and you may also have other rights which vary from state to state.

Trane, 2701 Wilma Rudolph Blvd., Clarksville, TN 37040-1008

Attention: Manager, Product Service

TW-338-0597

* This warranty is for commercial usage of said equipment and not applicable when the equipment is used for a residential application. Commercial use is any application where the end purchaser uses the product for other than personal, family or household purposes.

Commercial Equipment Rated 20 Tons and Larger and Related Accessories (Parts Only)

Products Covered — This warranty is extended by Trane and applies only to commercial equipment rated 20 tons and larger and related accessories purchased and retained for use within the U.S.A. and Canada.

Warrantor warrants for a period of 12 months from initial start-up or 18 months from date of shipment, whichever is less, that the products covered by this warranty (1) are free from defects in material and manufacture, and (2) have the capacities and ratings set forth in catalogs and bulletins; provided, that no warranty is made against corrosion, erosion or deterioration. Warrantor's obligations and liabilities under this warranty are limited to furnishing, F.O.B. factory replacement parts (or equipment at the option of Warrantor) for all Warrantor's products not conforming to this warranty. Warrantor shall not be obligated to pay for the cost of lost refrigerant. No liability whatever shall attach to Warrantor until said products have been paid for and then said liability shall be limited to the purchase price of the equipment shown to be defective.

THE WARRANTY AND LIABILITY SET FORTH HEREIN ARE IN LIEU OF ALL OTHER WARRANTIES AND LIABILITIES, WHETHER IN CONTRACT OR IN NEGLIGENCE, EXPRESS OR IMPLIED, IN LAW OR IN FACT, INCLUDING IMPLIED WARRANTIES OF MERCHANTABILITY AND FITNESS FOR PARTICULAR USE, AND IN NO EVENT SHALL WARRANTOR BE LIABLE FOR ANY INCIDENTAL OR CONSEQUENTIAL DAMAGES.

Some states do not allow limitations on how long an implied warranty lasts or do not allow the exclusion or limitation of incidental or consequential damages, so the above limitation or exclusion may not apply to you. This warranty gives you specific legal rights, and you may also have other rights which vary from state to state.

Trane —Warrantor, 2701 Wilma Rudolph Blvd., Clarksville, TN 37040

GW-598-4799

Wiring Diagram Matrix

DIAGRAM NO.	DIAGRAM TYPE	UNIT MODEL NO'S
2313-0401	Power/Control Diagram	TWE051DD00AA, TWE061D300AA, TWE061D400AA, TWE061DK00AA, TWE061DW00AA, TWE076DD00AA, TWE090D300AA, TWE090DK00AA, TWE090DW00AA, TWE101DD00AA, TWE120D300AA, TWE120DK00AA, TWE120DW00AA
2313-0402	Power/Control Diagram	TWE061D100AA, TWE090D100AA, TWE120D100AA
2313-0431	Power/Control Diagram	TWE061E300AA, TWE061E400AA, TWE090E300AA, TWE0101ED00AA, TWE120E300AA, TWE120EK00AA, TWE120EW00AA, TWE126ED00AA, TWE150E300AA, TWE150EK00AA, TWE150EW00AA, TWE156ED00AA, TWE180E300AA, TWE180EK00AA, TWE180EW00AA, TWE201ED00AA, TWE240E300AA, TWE240E400AA, TWE240EK00AA, TWE240EW00AA
2313-0432	Power/Control Diagram	TWE061E100AA, TWE090E100AA, TWE120E100AA

Note: **Wiring diagrams are available through e-Library or by contacting your local sales office**

Digitally printed on
environmentally friendly paper;
produced using fewer trees and
chemicals and less energy.

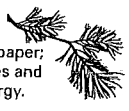

Literature Order Number	SSA-SVX06A-EN
Date	November 2009
Supersedes	SSA-SVX06A-EN (August 2009)

The manufacturer has a policy of continuous product and product data improvement and reserves the right to change design and specifications without notice. Only qualified technicians should perform the installation and servicing of equipment referred to in this literature.

Installation, Operation, and Maintenance

Split System Air Handlers

5-20 Tons

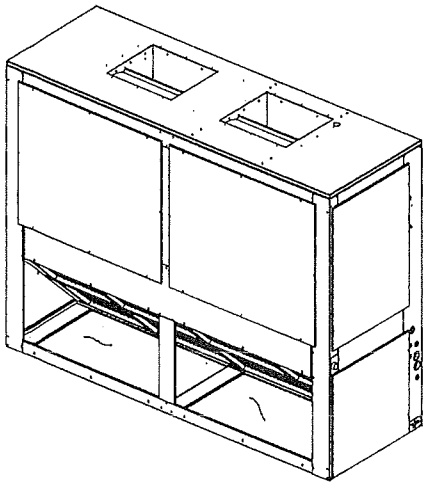

Model (60 Hz)	Model (50 Hz)
TWE061D/E***A	TWE051D***A
TWE090D/E***A	TWE076D***A
TWE120D/E***A	TWE101D/E***A
TWE150E***A	TWE126E***A
TWE180E***A	TWE156E***A
TWE240E***A	TWE201E***A

⚠SAFETY WARNING

Only qualified personnel should install and service the equipment. The installation, starting up, and servicing of heating, ventilating, and air-conditioning equipment can be hazardous and requires specific knowledge and training. Improperly installed, adjusted or altered equipment by an unqualified person could result in death or serious injury. When working on the equipment, observe all precautions in the literature and on the tags, stickers, and labels that are attached to the equipment.

March 2011

SSA-SVX06A-EN

Warnings, Cautions and Notices

Warnings, Cautions and Notices. Note that warnings, cautions and notices appear at appropriate intervals throughout this manual. Warnings are provided to alert installing contractors to potential hazards that could result in personal injury or death. Cautions are designed to alert personnel to hazardous situations that could result in personal injury, while notices indicate a situation that could result in equipment or property-damage-only accidents.

Your personal safety and the proper operation of this machine depend upon the strict observance of these precautions.

ATTENTION: Warnings, Cautions and Notices appear at appropriate sections throughout this literature. Read these carefully.

⚠ **WARNING:** Indicates a potentially hazardous situation which, if not avoided, could result in death or serious injury.

⚠ **CAUTION:** Indicates a potentially hazardous situation which, if not avoided, could result in minor or moderate injury. It could also be used to alert against unsafe practices.

NOTICE: Indicates a situation that could result in equipment or property-damage only accidents.

Important Environmental Concerns!

Scientific research has shown that certain man-made chemicals can affect the earth's naturally occurring stratospheric ozone layer when released to the atmosphere. In particular, several of the identified chemicals that may affect the ozone layer are refrigerants that contain Chlorine, Fluorine and Carbon (CFCs) and those containing Hydrogen, Chlorine, Fluorine and Carbon (HCFCs). Not all refrigerants containing these compounds have the same potential impact to the environment. Trane advocates the responsible handling of all refrigerants-including industry replacements for CFCs such as HCFCs and HFCs.

Responsible Refrigerant Practices!

Trane believes that responsible refrigerant practices are important to the environment, our customers, and the air conditioning industry. All technicians who handle refrigerants must be certified. The Federal Clean Air Act (Section 608) sets forth the requirements for handling, reclaiming, recovering and recycling of certain refrigerants and the equipment that is used in these service procedures. In addition, some states or municipalities may have additional requirements that must also be adhered to for responsible management of refrigerants. Know the applicable laws and follow them.

⚠WARNING

R-410A Refrigerant under Higher Pressure than R-22!

The unit described in this manual uses R-410A refrigerant which operates at higher pressures than R-22 refrigerant. Use ONLY R-410A rated service equipment or components with this unit. For specific handling concerns with R-410A, please contact your local Trane representative. Failure to use R-410A rated service equipment or components could result in equipment or components exploding under R-410A high pressures which could result in death, serious injury, or equipment damage.

© 2011 Trane All rights reserved

⚠WARNING
Contains R-410A Refrigerant!

System contains oil and refrigerant under high pressure. Recover refrigerant to relieve pressure before opening the system. See unit nameplate for refrigerant type. Do not use non-approved refrigerants, refrigerant substitutes, or refrigerant additives. Failure to follow proper procedures or the use of non-approved refrigerants, refrigerant substitutes, or refrigerant additives could result in death or serious injury or equipment damage.

Important: *DO NOT release refrigerant to the atmosphere! If adding or removing refrigerant is required, the service technician must comply with all federal, state, and local laws.*

Important: *One copy of this document ships inside the control panel of each unit and is customer property. It must be retained by the unit's maintenance personnel.*

⚠WARNING
Personal Protective Equipment (PPE) Required!

Installing/servicing this unit could result in exposure to electrical, mechanical and chemical hazards.

- **Before installing/servicing this unit, technicians MUST put on all Personal Protective Equipment (PPE) recommended for the work being undertaken. ALWAYS refer to appropriate MSDS and OSHA guidelines for proper PPE.**
- **When working with or around hazardous chemicals, ALWAYS refer to appropriate MSDS and OSHA guidelines for information on allowable personal exposure levels, proper respiratory protection and handling recommendations.**
- **If there is a risk of arc or flash, technicians MUST put on all Personal Protective Equipment (PPE) in accordance with NFPA70E or other country-specific requirements for arc/flash protection PRIOR to servicing the unit.**

Failure to follow recommendations could result in death or serious injury.

This booklet describes proper installation, operation, and maintenance procedures for air cooled systems. By carefully reviewing the information within this manual and following the instructions, the risk of improper operation and/or component damage will be minimized.

It is important that periodic maintenance be performed to help assure trouble free operation. Should equipment failure occur, contact a qualified service organization with qualified, experienced HVAC technicians to properly diagnose and repair this equipment.

Important: *All phases of this installation must comply with the NATIONAL, STATE & LOCAL CODES. In addition to local codes, the installation must conform with National Electric Code -ANSI/NFPA NO. 70 LATEST REVISION.*

Any individual installing, maintaining, or servicing this equipment must be properly trained, licensed and qualified.

Table of Contents

Model Number Description 5

General Information 6
- Installation Checklist 6
- Unit Inspection 6
- Initial Leak Test 6
- Lifting Recommendations 6

Pre-Installation 8
- Repositioning Drain Pan 8
- Field Conversion to 460 Volt 9
- Refrigerant Piping 11
- Installations, Limitations and Recommendations 12

Dimensional Data 13

Electrical Data 22

Installation 30
- Horizontal Suspension 30
- Refrigerant Piping 31
- Condensate Piping 32
- Filters 32
- Duct Connections 32
- Air Flow Settings 32
- Electrical Connections 33
- Checkout Procedure 34
- Installation Checklist 34

Electrical Wiring 34
- Thermostat and Control Connections for Electromechanical Controls . 35
- Thermostat and Control Connections for ReliaTel™ Controls 36

Maintenance 38
- Fan Belt Adjustment 38
- Monthly 39
- Annually (Cooling Season) 40
- Coil Cleaning 40
- Precautionary Measures 41
- First Aid Measures 41
- Maintenance Log 42

Warranty 43

Central Air Conditioner 43
- Commercial Equipment Rated 20 Tons and Larger and Related Accessories (Parts Only) 43

Wiring Diagram Matrix 45

Model Number Description

TWE	201	E	D	00	*	*
1 2 3	4 5 6	7	8	9 10	11	12

Model Number Description

All products are identified by a multiple-character model number that precisely identifies a particular type of unit. An explanation of the alphanumeric identification code is provided. Its use will enable the owner/ operator, installing contractors, and service engineers to define the operation, specific components, and other options for any specific unit.

Note: *When ordering replacement parts or requesting service, be sure to refer to the specific model number, serial number, and DL number (if applicable) stamped on the unit nameplate.*

DIGITS 1 - 3: Product Type

TWE = Split System Heat Pump/Cooling Air Handler

DIGITS 4 - 6: Nominal Gross Cooling Capacity (MBh)

061 = 5 Tons (60 Hz)
090 = 7½ Tons (60 Hz)
120 = 10 Tons (60 Hz)
150 = 12½ Tons (60 Hz)
180 = 15 Tons (60 Hz)
240 = 20 Tons (60 Hz)
051 = 4.6 Tons (50 Hz)
076 = 6.25 Tons (50 Hz)
101 = 8.33 Tons (50 Hz)
126 = 10.4 Tons (50 Hz)
156 = 13 Tons (50 Hz)
201 = 16.7 Tons (50 Hz)

DIGIT 7: Major Development Sequence

D = Single Circuit
E = Dual Circuit

DIGIT 8: Electrical Characteristics

1 = 208-230/60/1
3 = 208-230/60/3
4 = 460/60/3
W = 575/60/3
D = 380-415/50/3
K = 380/60/3

DIGITS 9 - 10: Factory Installed Options

00 = Packed Stock

DIGITS 11: Minor Design Sequence

*= Current Design Sequence[1]

DIGITS 12: Service Digit

* = Current Design Sequence[1]

[1] * = sequential alpha character

General Information

Installation procedures should be performed in the sequence that they appear in this manual. Do not destroy or remove the manual from the unit.

The manual should remain weather-protected with the unit until all installation procedures are complete.

Note: *It is not the intention of this manual to cover all possible variations in systems that may occur or to provide comprehensive information concerning every possible contingency that may be encountered during an installation. If additional information is required or if specific problems arise that are not fully discussed in this manual, contact your local sales office.*

This manual covers installation of the TWE air handlers. These air handler models incorporate a single slab coil assembly, improved application flexibility, servicing, maintenance accessibility and an improved accessory line. They are fully convertible, (vertical to horizontal discharge) without field removal of the coil assembly. They are shipped ready for horizontal installation.

All units have one drain pan that can be installed in any one of four positions. This allows for vertical or horizontal applications and right or left exit.

Important: *All dual circuit (digit 7 = E) have an intertwined coil.*

Installation Checklist

An "Installation Checklist" is provided at the end of the installation section of this manual. Use the checklist to verify that all necessary installation procedures have been completed. Do not use the checklist as a substitute for reading the information contained in the manual. Read the entire manual before beginning installation procedures.

Unit Inspection

Inspect material carefully for any shipping damage. If damaged, it must be reported to, and claims made against the transportation company. Compare the information that appears on the unit nameplate with ordering and submittal data to ensure the proper unit was shipped. Available power supply must be compatible with electrical characteristics specified on component nameplates. Replace damaged parts with authorized parts only.

Initial Leak Test

All TWE units are shipped with a holding charge of nitrogen in each circuit. Remove the access panel shown in Figure 13, p. 21. Locate the liquid line or suction line access valve for each circuit. Install gauges to determine if the circuits are still pressurized. If not, the charge has escaped. Repair as required to obtain a leak-free circuit.

Lifting Recommendations

⚠ WARNING

Improper Unit Lift!

Each of the cables (chains or slings) used to lift the unit must be capable of supporting the entire weight of the unit. Lifting cables (chains or slings) may not be of the same length. Adjust as necessary for even unit lift. Other lifting arrangements may cause equipment or property-only damage. Failure to properly lift unit could result in death or serious injury. Refer to Table 1 and Table 2 for unit weight.

NOTICE

Equipment Damage!

Use spreader bars to prevent straps from damaging the unit. Install the bars between lifting straps, both underneath the unit and above the unit. This will prevent the straps from crushing the unit cabinet or damaging the unit finish.

Before preparing the unit for lifting, estimate the approximate center of gravity for lifting safety. Because of placement of internal components, the unit weight may be unevenly distributed. Approximate unit weights are given in Table 1 and Table 2, p. 7.

The crated unit can be moved using a forklift of suitable capacity. For lifting the unit into an elevated mounting position, run lifting straps or slings under the unit and attach securely to the lifting device.

Table 1. TWE Unit and Corner Weights - lbs (60 Hz)

Tons	Model No.	Shipping Max (lbs)	Net Max (lbs)	Corner Weights - Vertical				Corner Weights - Horizontal			
				1	2	3	4	A	B	C	D
5	TWE061D/E	263	232	55	71	51	55	54	67	50	61
7½	TWE090D/E	360	323	67	99	75	82	56	92	87	88
10	TWE120D/E	429	393	77	121	110	85	79	118	77	119
12½	TWE150E	730	676	168	192	181	135	196	164	145	171
15	TWE180E	729	675	167	192	181	135	196	163	145	171
20	TWE240E	891	818	258	168	161	231	256	181	146	235

Table 2. TWE Unit and Corner Weights - kg (50 Hz)

Tons	Model No.	Shipping Max (kg)	Net Max (kg)	Corner Weights - Vertical				Corner Weights - Horizontal			
				1	2	3	4	A	B	C	D
5	TWE051D/E	118	104	25	32	23	25	24	30	23	27
7½	TWE076D/E	162	145	30	45	34	37	25	41	39	40
10	TWE101D/E	193	177	35	54	50	38	36	53	35	54
12½	TWE126E	329	304	76	86	81	61	88	74	65	77
15	TWE156E	328	304	75	86	81	61	88	73	65	77
20	TWE201E	401	368	116	76	72	104	115	81	66	106

Pre-Installation

The final position for the air handler must be dictated by required service access to it, weight distribution over structural supports, and by the locations of electrical, refrigerant and condensate drainage connections. After this is determined, the following preparations should be made.

Repositioning Drain Pan

These air handlers come with one drain pan that can be installed in any one of four positions; this allows for vertical or horizontal application and right or left condensate line connection. The drain pan can also be easily removed for periodic cleaning.

Note: *Important! All air handlers are shipped with the drain pan installed in the horizontal position and the connection on the left side (as shown in Figure 1. If an alternate position is required, the drain pan should be repositioned before setting the air handler.*

Figure 1. Drain Pan Location

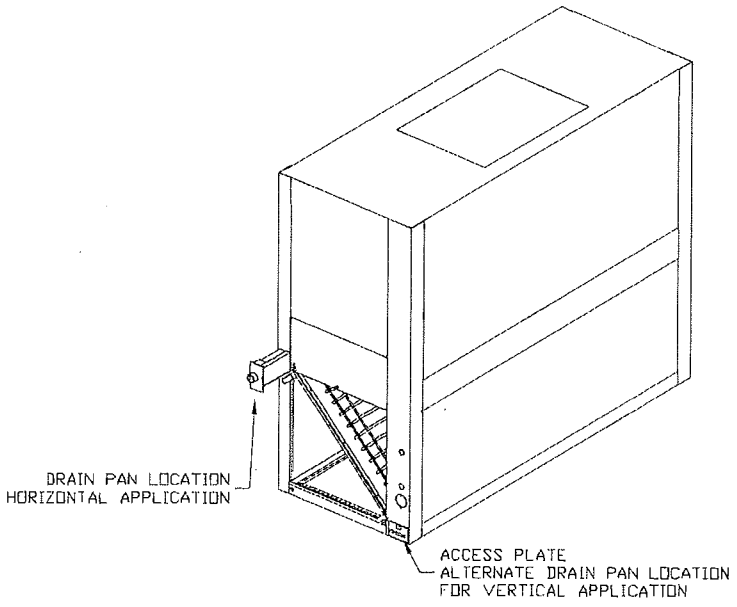

Process for Drain Pan Relocation

1. Remove the access plate at the opposite end of the drain connection. This plate secures and lifts the back end of the drain pan for sloping. It must be removed before the drain pan can be removed. This is done as follows:
   a. Remove the screw
   b. Lift the access plate up
   c. Pull the plate out. If the drain pan is to be moved to the vertical position also remove the other two access plates.
2. Remove the screw securing the drain pan.
   a. Lift the pan up
   b. Slide the pan out
3. Install the drain pan into the new position.
   a. Slide the drain pan into the opening
   b. Lift the drain pan up
   c. Push it in all the way
   d. Drop it down over the lip of the opening, secure with screw
4. Install the access plate on the opposite end of the drain pain.
   a. Slide the edge of the access plate under the drain pan
   b. Lift the access plate and drain pan up
   c. Push the access plate in
   d. Drop the access plate down over the lip of the opening, secure with screw. If the drain pan is being moved to the vertical position, install the other access plates over the horizontal position opening.

Figure 2. Drain Pan Relocation

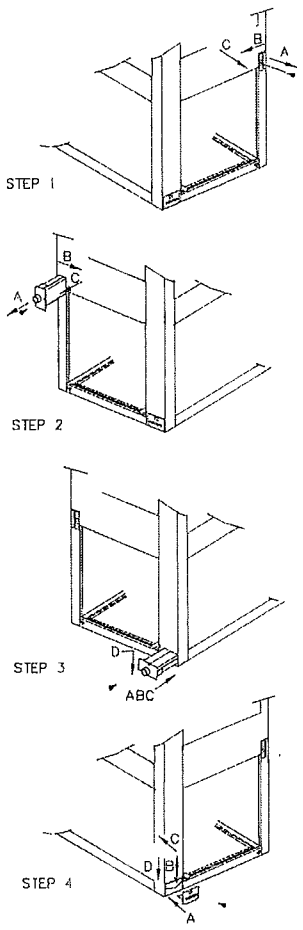

NOTICE

System Component Damage!

These air handlers are shipped with a dry nitrogen holding charge in the coil. Depress or remove the access valve core to bleed off the nitrogen prior to brazing. Temporarily cap off tubes if the refrigerant line connections are to be made later.

Field Conversion to 460 Volt

⚠WARNING

Hazardous Voltage w/Capacitors!

Disconnect all electric power, including remote disconnects and discharge all motor start/run capacitors before servicing. Follow proper lockout/tagout procedures to ensure the power cannot be inadvertently energized. For variable frequency drives or other energy storing components provided by Trane or others, refer to the appropriate manufacturer's literature for allowable waiting periods for discharge of capacitors. Verify with an appropriate voltmeter that all capacitors have discharged. Failure to disconnect power and discharge capacitors before servicing could result in death or serious injury.

⚠WARNING
Grounding Required!

Follow proper local and state electrical code on requirements for grounding. Failure to follow code could result in death or serious injury.

- Available power supply must agree with electrical data on component nameplate.
- Some air handlers are shipped wired for 208-230 volt applications and can be converted for 460 volt by rewiring the blower motor, see Figure 3. (This includes models TWE090D3, TWE090E3, TWE120D3, TWE120E3, TWE150E3 and TWE180E3).

Converting Motor to 460 Volt

1. Ensure power is disconnected to unit by following the warning above.
2. Remove unit access panels closest to motor.
3. Open terminal cover on lead end of motor.
4. Pull voltage selector plug from low voltage selection (see Figure 3).
5. Shift the plug (or rotate 180°) to align plug for high voltage selection and re-insert plug.

Important: *When re-inserting voltage selection plug, ensure it is fully seated.*

6. Replace terminal cover on lead end of motor.
7. Replace unit access panels.

Figure 3. Voltage Change Plug

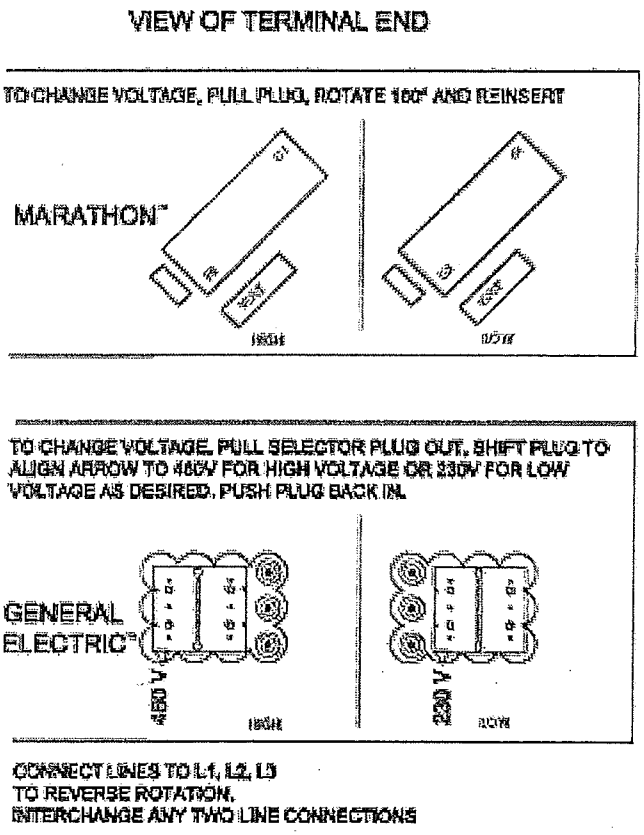

Refrigerant Piping

Evaporator Coil Orientation

Important: *Applies only to TWE126/150 and 156/180 when positioned for vertical upflow. Unit is shipped in the horizontal position. If installing in the* ***vertical position****, the coil* ***must be*** *reoriented by rotating the coil 4 degrees (control box side) from the shipped position. See instructions and Figure 4 below.*

Process for reorienting evaporator coil on TWE126, 150, 156 and 180 only.

1. Remove screws from top evaporator coil bracket (bracket that attaches coil to cabinet and runs the length of the unit).
2. Rotate evaporator coil approximately 4 degrees clockwise - looking from the control box end (see Figure 4). When the evaporator coil is rotated, the lower set of evaporator coil bracket holes will align with the support bracket (from which it was originally fastened).
3. Reinsert screws in evaporator coil bracket.

Figure 4. Evaporator Coil Reorientation for TWE126, 150, 156, 180

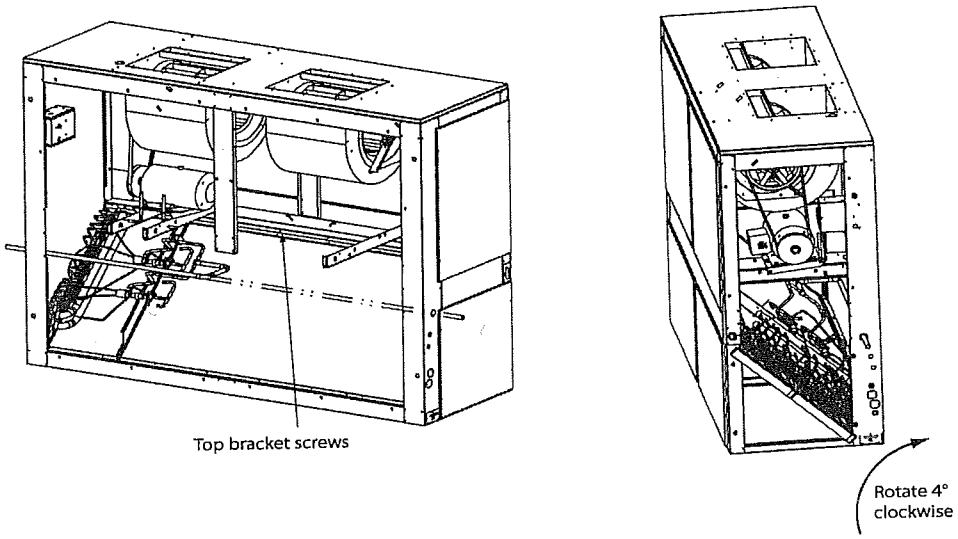

Preparation

NOTICE

Unit Damage!

Do not apply heat to remove seal caps until the gauge port cores have been removed. If seal caps are intact, application of heat may generate excessive pressure in the unit and result in damage to the coil or expansion valve.

The air handler is designed so that refrigerant piping can enter from either the right or left hand side. It is shipped with the intent that the refrigerant lines will enter from the left hand side. To convert to right hand entry, unbraze the elbow on the suction line and rotate 180° and rebraze.

Important: *Access to refrigerant lines is limited in all horizontal and some vertical applications. Therefore, refrigerant lines should be stubbed out and temporarily capped prior to setting the air handler. Protect adjacent surfaces from heat damage when brazing in and around the air handler.*

Installations, Limitations and Recommendations

NOTICE
System Component Damage!

Properly insulate all refrigerant gas piping to prevent possible water damage due to condensation and to prevent capacity loss and possible compressor damage.

The general location of the air handler is normally selected by the architect, contractor and/or buyer. For proper installation the following items must be considered.

- Available power supply must agree with electrical data on component nameplate.
- If external accessories are installed on the unit, additional clearances must be provided.
- All duct work should be properly insulated to prevent condensation and heat loss.
- Refrigerant gas piping must be insulated.

It is recommended that the outline drawings (Figure 6, p. 14 - Figure 13, p. 21) be studied and dimensions properly noted and checked against the selected installation site. By noting in advance which features are to be used, proper clearance allowances can be made for installation and possible future service.

Important: *When installing these units "free standing" with discharge grills and isolators, a top support with isolator should be added to prevent tipping. Support and isolator can be attached to a wall or other appropriate structure.*

Important: *If adding external accessories to the unit, additional clearances must be considered for the overall space needed.*

For installation of accessories available for this air handler, follow the instructions packed with each accessory.

Dimensional Data

Figure 5. TWE Quick Reference

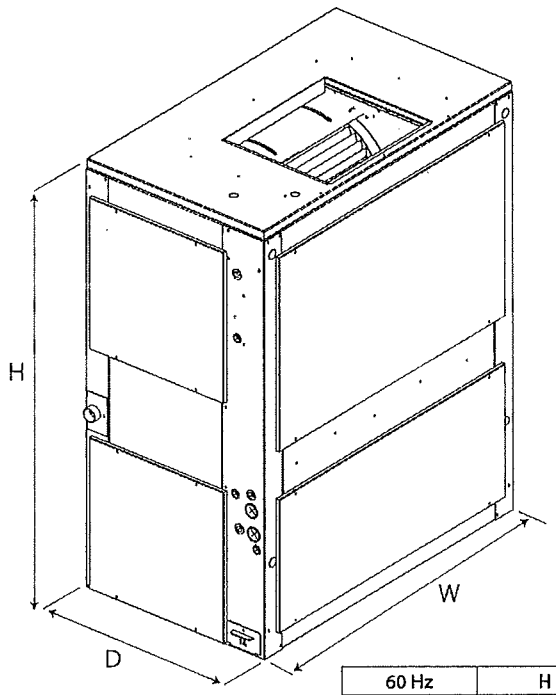

60 Hz	H	W	D
TWE061	48-1/8 (1222.4)	39-5/8 (1006.5)	23-5/8.(600)
TWE090	54-1/8 (1374.8)	49-1/8 (1247.8)	26-1/2 (673.1)
TWE120	54-1/8 (1374.8)	65-1/8 (1654.2)	26-1/2 (673.1)
TWE150, 180	69-1/8 (1756)	81-1/4 (2063.7)	30 (762)
TWE240	71-7/8 (1806.6)	94-1/4 (2394)	32-1/8 (816)

50 Hz	H	W	D
TWE051	48-1/8 (1222.4)	39-5/8 (1006.5)	23-5/8 (600)
TWE076	54-1/8 (1374.8)	49-1/8 (1247.8)	26-1/2 (673.1)
TWE101	54-1/8 (1374.8)	65-1/8 (1654.2)	26-1/2 (673.1)
TWE126, 156	69-1/8 (1756)	81-1/4 (2063.7)	30 (762)
TWE201	71-7/8 (1806.6)	94-1/4 (2394)	32-1/8 (816)

Note: *Full dimensional data available on next pages.*

Figure 6. TWE051, 061 Air Handler, Single Circuit — in (mm)

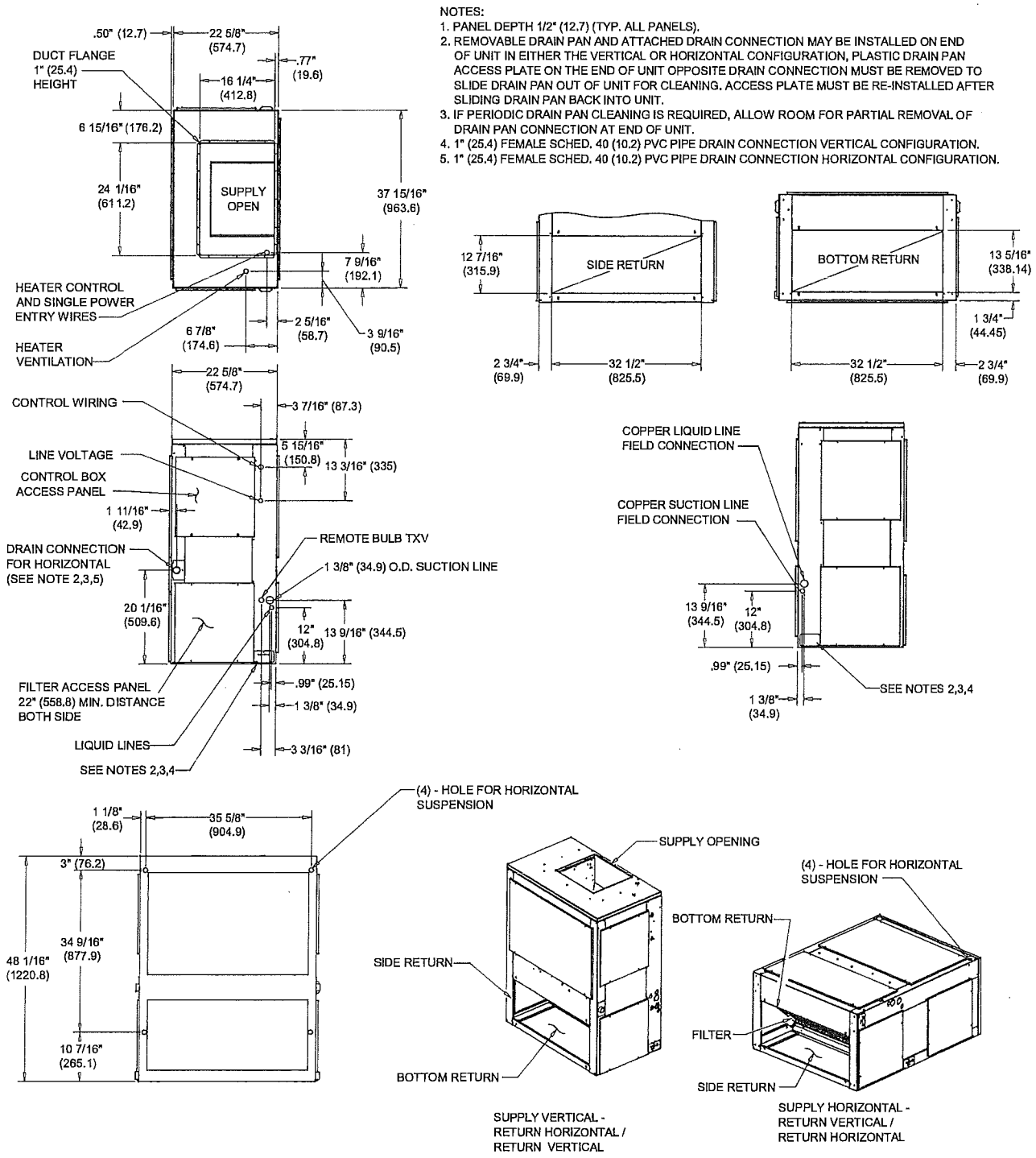

4.6 - 6.25 TON AIR HANDLER (SINGLE CIRCUIT)

DIMENSIONAL DRAWING

Figure 7. TWE061 Air Handler, Dual Circuit — in (mm)

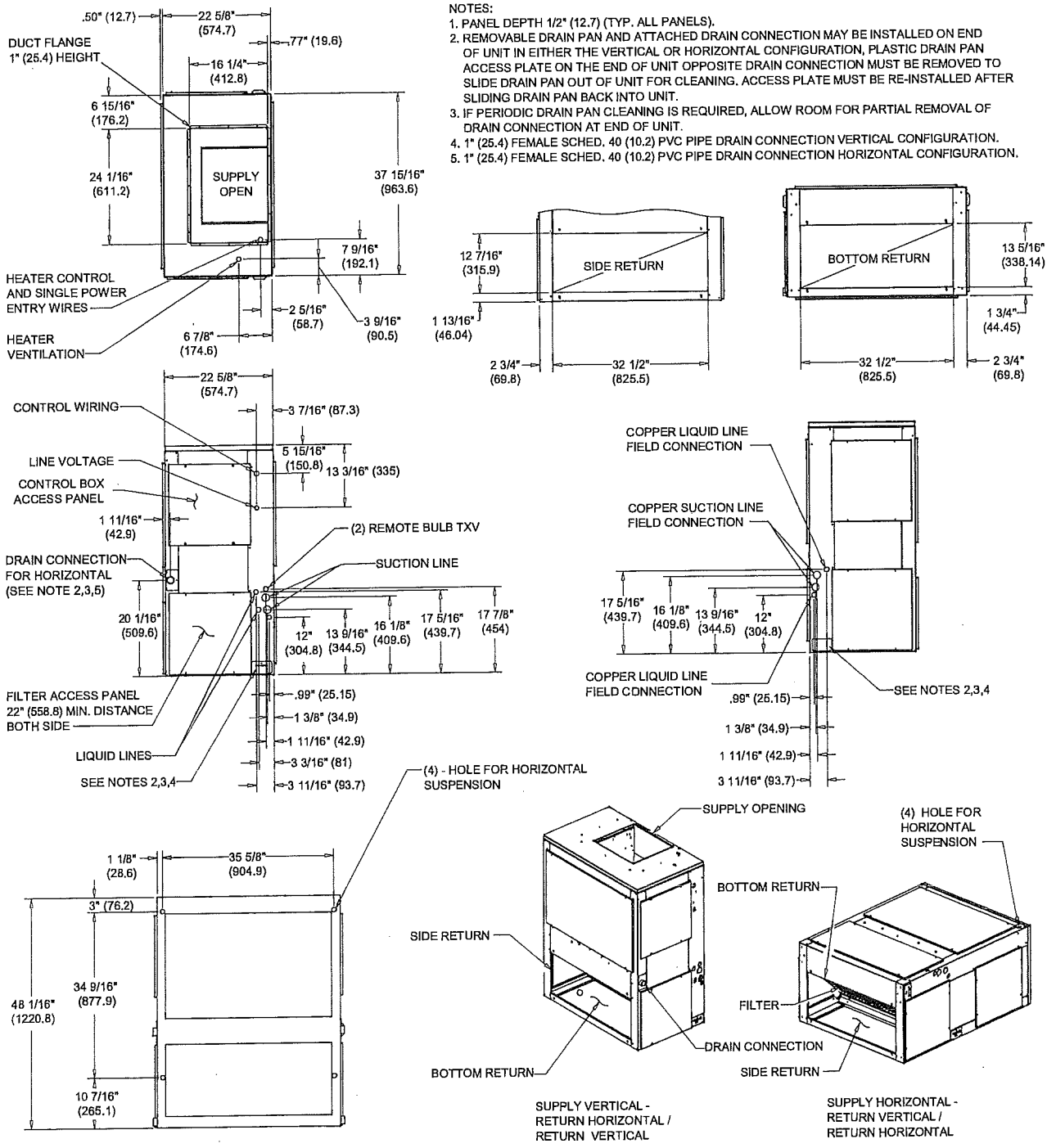

5 TON AIR HANDLER (DUAL CIRCUIT)

DIMENSIONAL DRAWING

Figure 8. TWE076, 090 Air Handler, Single Circuit — in (mm)

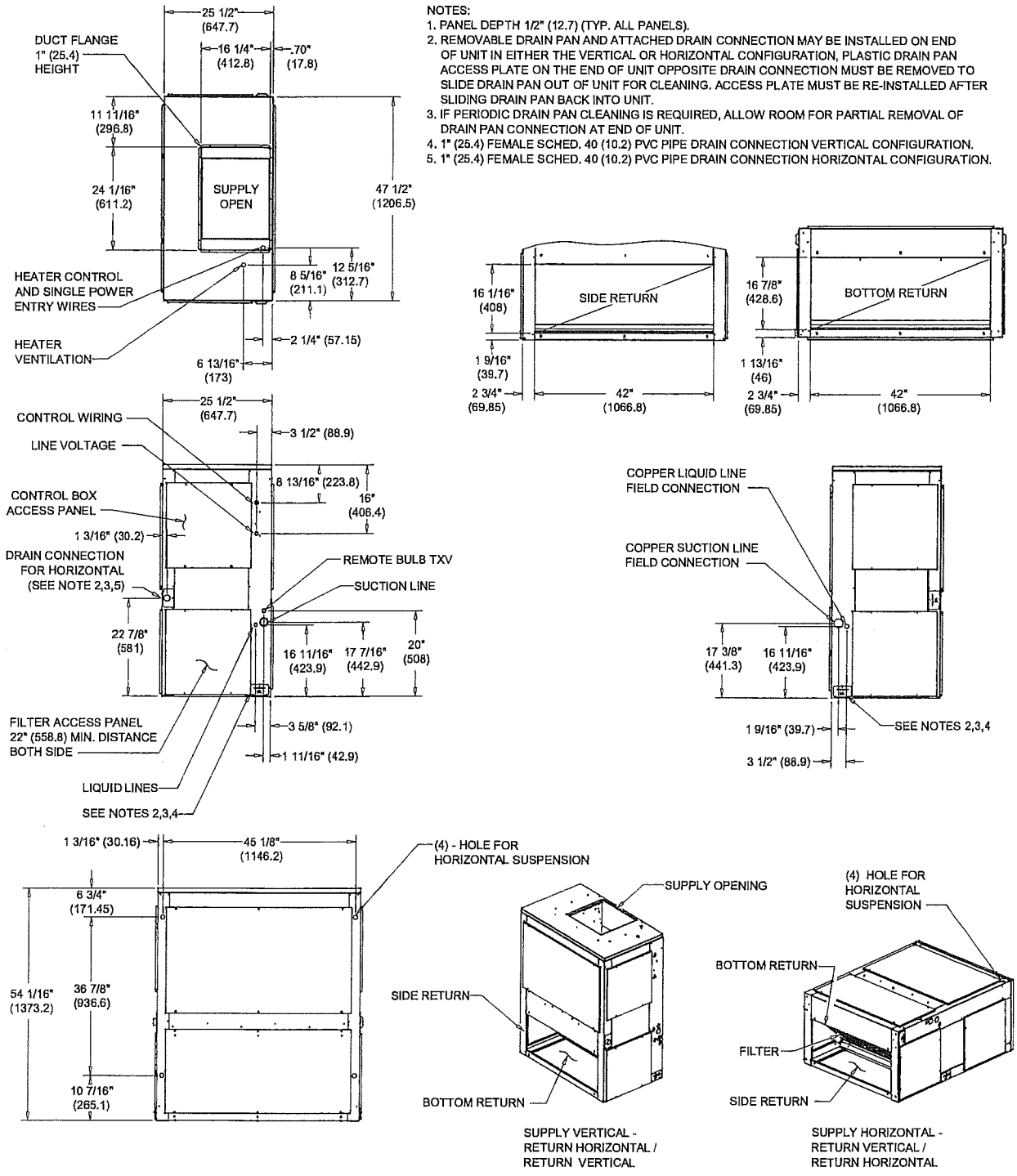

6.25 - 7.5 TON AIR HANDLER (SINGLE CIRCUIT)
DIMENSIONAL DRAWING

Figure 9. TWE090 Air Handler, Dual Circuit — in (mm)

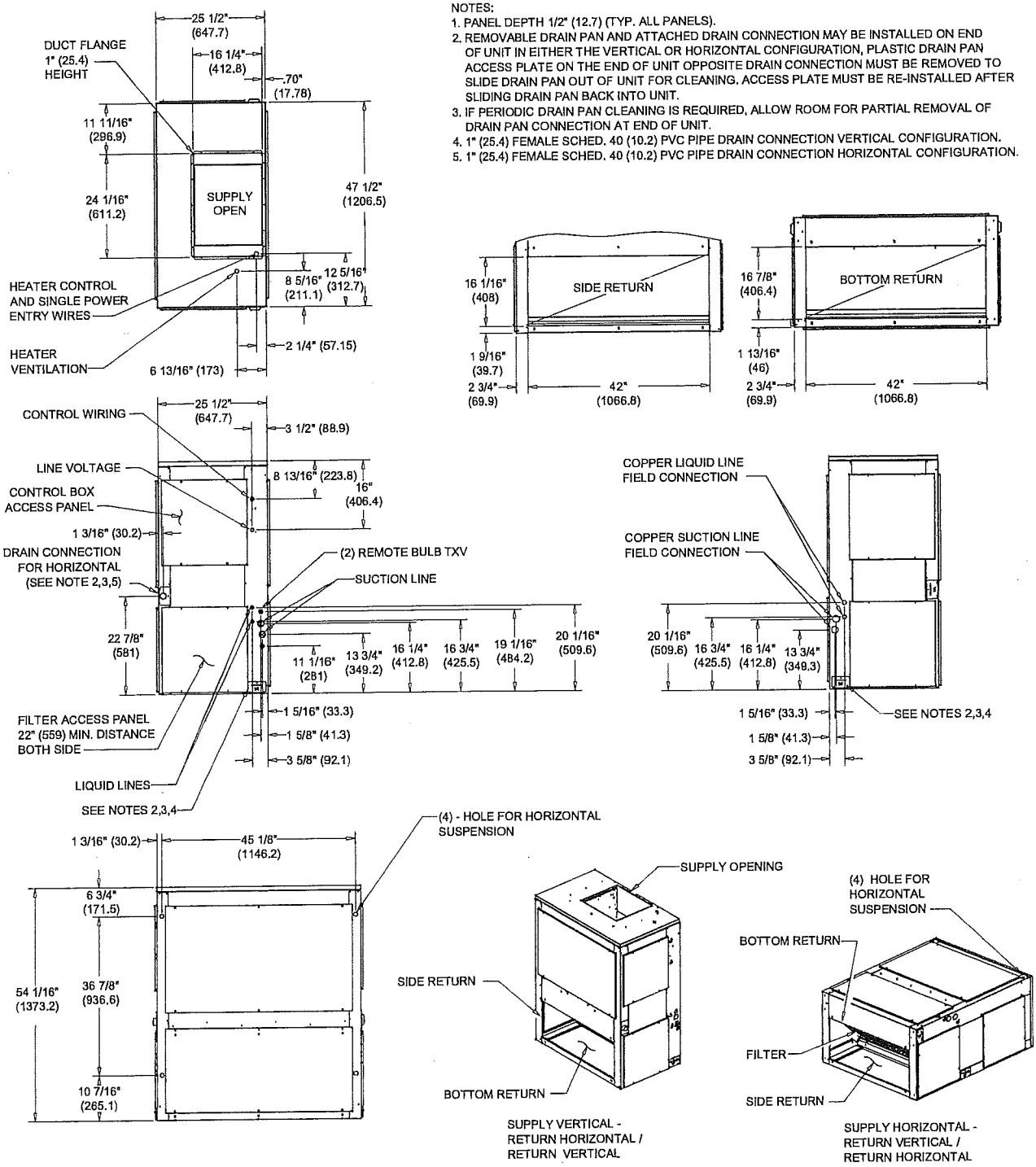

7.5 TON AIR HANDLER (DUAL CIRCUIT)

DIMENSIONAL DRAWING

Figure 10. TWE101, 120 Air Handler, Single Circuit — in (mm)

NOTES:
1. PANEL DEPTH 1/2" (12.7) (TYP. ALL PANELS).
2. REMOVABLE DRAIN PAN AND ATTACHED DRAIN CONNECTION MAY BE INSTALLED ON END OF UNIT IN EITHER THE VERTICAL OR HORIZONTAL CONFIGURATION, PLASTIC DRAIN PAN ACCESS PLATE ON THE END OF UNIT OPPOSITE DRAIN CONNECTION MUST BE REMOVED TO SLIDE DRAIN PAN OUT OF UNIT FOR CLEANING. ACCESS PLATE MUST BE RE-INSTALLED AFTER SLIDING DRAIN PAN BACK INTO UNIT.
3. IF PERIODIC DRAIN PAN CLEANING IS REQUIRED, ALLOW ROOM FOR PARTIAL REMOVAL OF DRAIN PAN CONNECTION AT END OF UNIT.
4. 1" (25.4) FEMALE SCHED. 40 (10.2) PVC PIPE DRAIN CONNECTION VERTICAL CONFIGURATION.
5. 1" (25.4) FEMALE SCHED. 40 (10.2) PVC PIPE DRAIN CONNECTION HORIZONTAL CONFIGURATION.

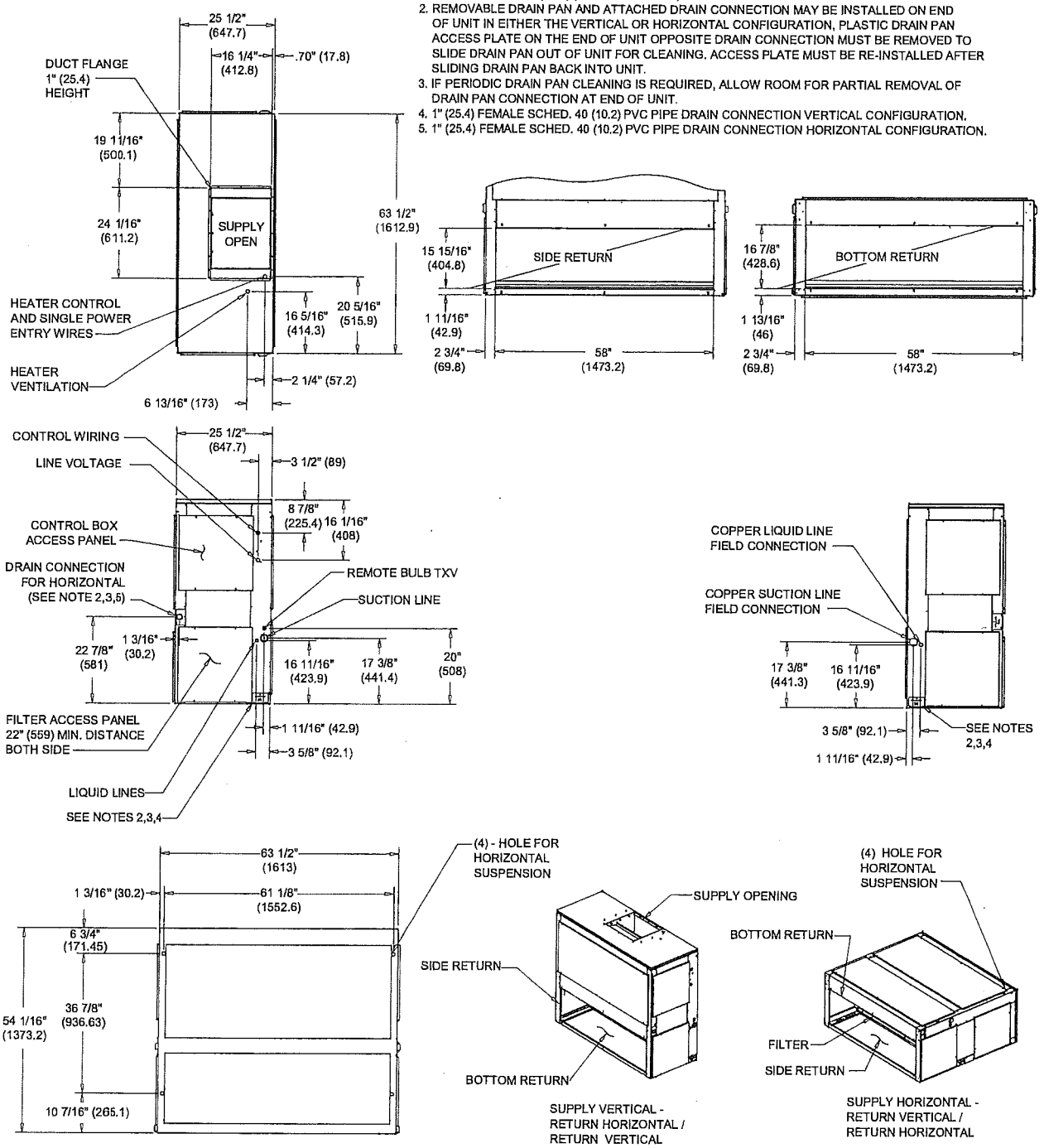

10 - 10.4 TON AIR HANDLER (SINGLE CIRCUIT)
DIMENSIONAL DRAWING

Figure 11. TWE101, 120 Air Handler, Dual Circuit — in (mm)

NOTES:
1. PANEL DEPTH 1/2" (12.7) (TYP. ALL PANELS).
2. REMOVABLE DRAIN PAN AND ATTACHED DRAIN CONNECTION MAY BE INSTALLED ON END OF UNIT IN EITHER THE VERTICAL OR HORIZONTAL CONFIGURATION, PLASTIC DRAIN PAN ACCESS PLATE ON THE END OF UNIT OPPOSITE DRAIN CONNECTION MUST BE REMOVED TO SLIDE DRAIN PAN OUT OF UNIT FOR CLEANING. ACCESS PLATE MUST BE RE-INSTALLED AFTER SLIDING DRAIN PAN BACK INTO UNIT.
3. IF PERIODIC DRAIN PAN CLEANING IS REQUIRED, ALLOW ROOM FOR PARTIAL REMOVAL OF DRAIN PAN CONNECTION AT END OF UNIT.
4. 1" (25.4) FEMALE SCHED. 40 (10.2) PVC PIPE DRAIN CONNECTION VERTICAL CONFIGURATION.
5. 1" (25.4) FEMALE SCHED. 40 (10.2) PVC PIPE DRAIN CONNECTION HORIZONTAL CONFIGURATION.

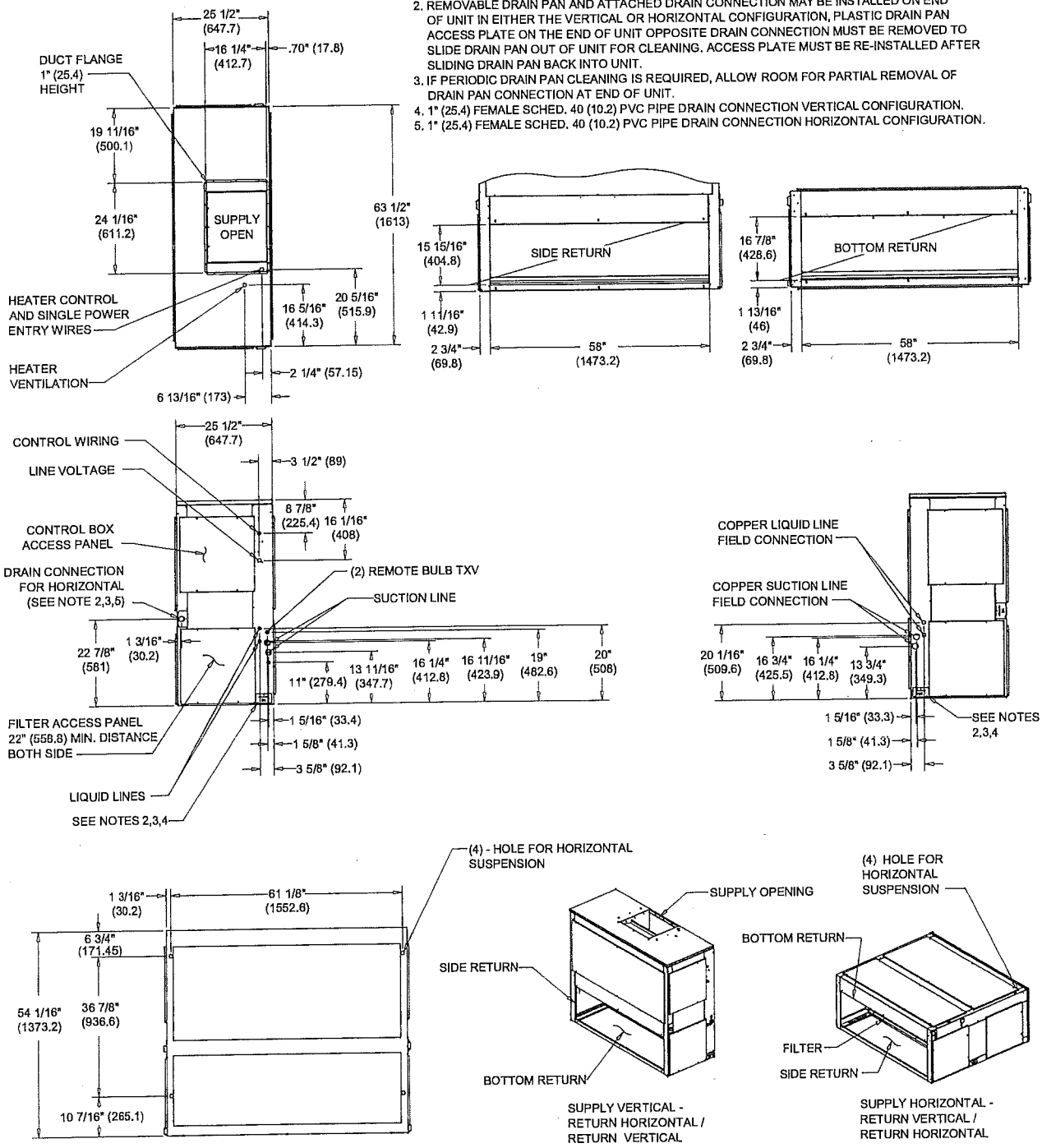

10 - 10.4 TON AIR HANDLER (DUAL CIRCUIT)
DIMENSIONAL DRAWING

Figure 12. TWE126, 150, 156, 180 Air Handler, Dual Circuit — in (mm)

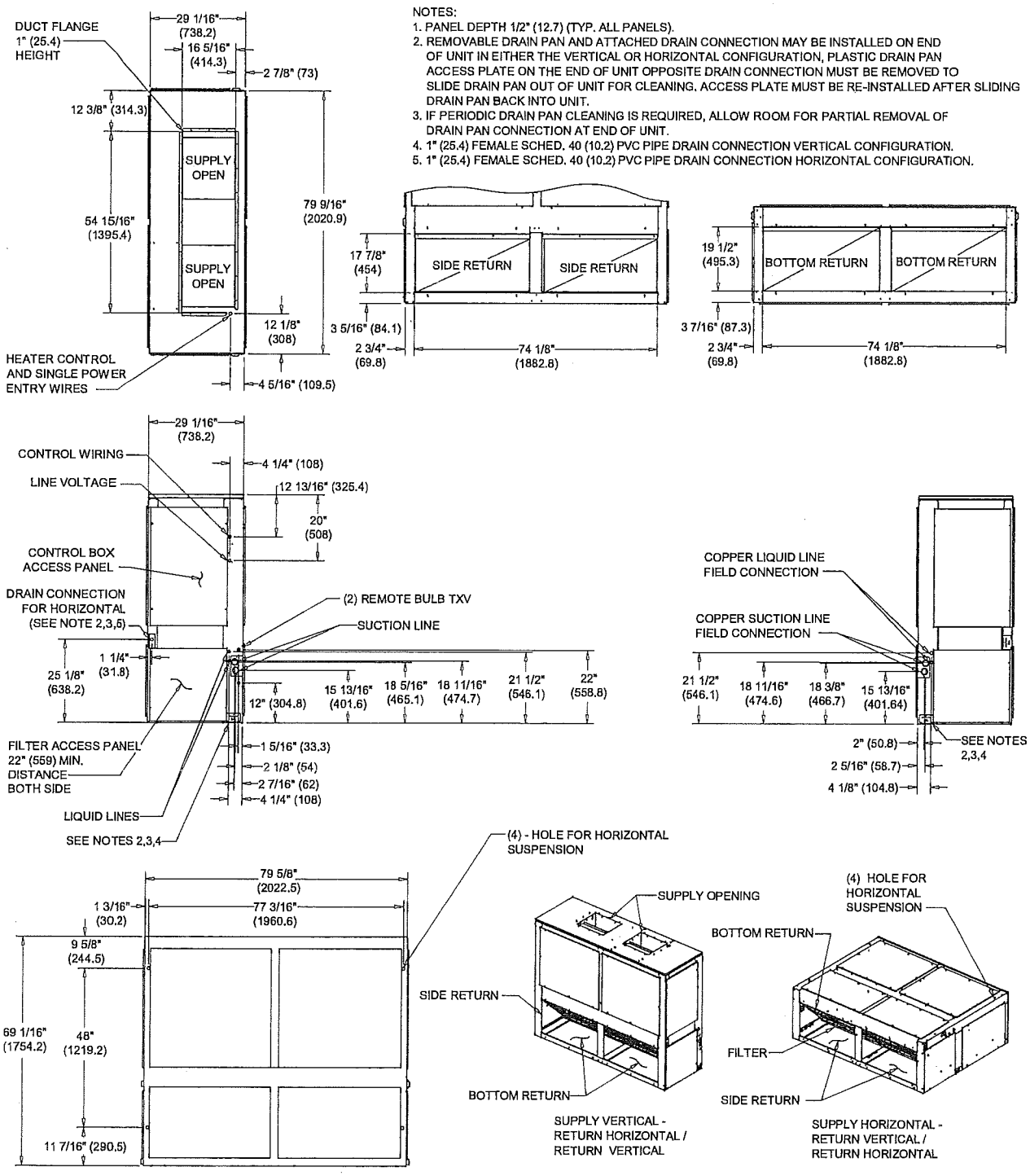

10.4 - 15 TON AIR HANDLER (DUAL CIRCUIT)
DIMENSIONAL DRAWING

Figure 13. TWE201, 240 Air Handler, Dual Circuit — in (mm)

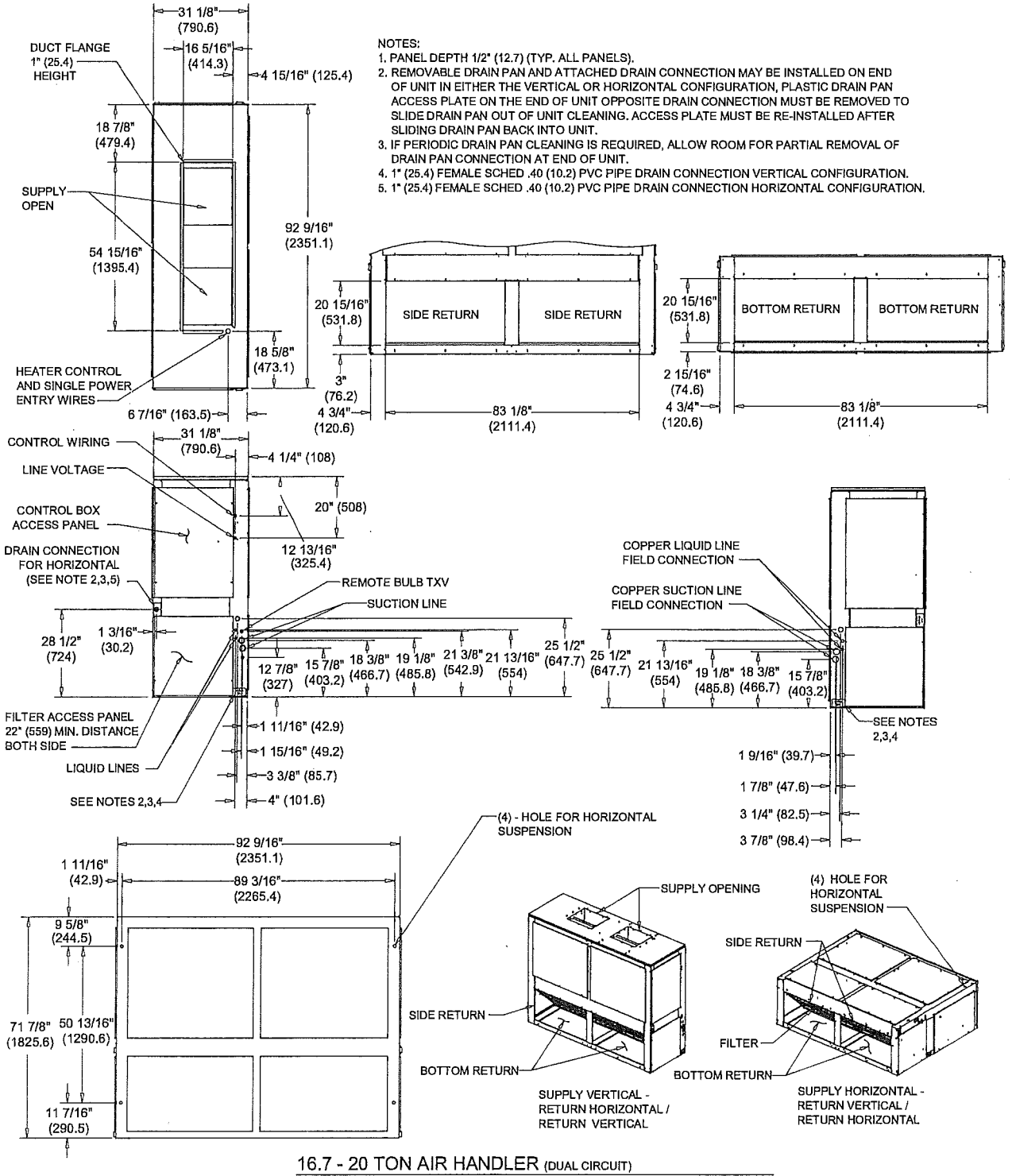

16.7 - 20 TON AIR HANDLER (DUAL CIRCUIT)
DIMENSIONAL DRAWING

Electrical Data

Table 3. Electrical Characteristics — Standard and Low Static Motors — 60 Hz Air Handler[a]

		Standard Evaporator Fan Motor								Low Static Evaporator Fan Motor							
						Amps								Amps			
Tons	Unit Model Number	No.	Volts	Phase	Hp	FLA	LRA	MCA	MFS	No.	Volts	Phase	Hp	FLA	LRA	MCA	MFS
5	TWE061D1, E1	1	208	1	0.75	6.0	41.0	7.5	15	N/A	N/A	N/A	N/A	N/A	N/A	N/A	N/A
	TWE061D1, E1	1	230	1	0.75	5.9	45.0	7.4	15	N/A	N/A	N/A	N/A	N/A	N/A	N/A	N/A
	TWE061D3, E3	1	208	3	0.75	2.5	16.4	3.1	15	N/A	N/A	N/A	N/A	N/A	N/A	N/A	N/A
	TWE061D3, E3	1	230	3	0.75	2.4	16.4	3.0	15	N/A	N/A	N/A	N/A	N/A	N/A	N/A	N/A
	TWE061D4, E4	1	460	3	0.75	1.2	8.2	1.5	15	N/A	N/A	N/A	N/A	N/A	N/A	N/A	N/A
	TWE061DW	1	575	3	0.75	1.3	6.1	1.6	15	N/A	N/A	N/A	N/A	N/A	N/A	N/A	N/A
7½	TWE090D1, E1	1	208	1	1.50	6.8	31.5	8.5	20	N/A	N/A	N/A	N/A	N/A	N/A	N/A	N/A
	TWE090D1, E1	1	230	1	1.50	6.2	31.5	7.8	15	N/A	N/A	N/A	N/A	N/A	N/A	N/A	N/A
	TWE090D3, E3	1	208	3	1.50	5.3	34.3	6.6	15	N/A	N/A	N/A	N/A	N/A	N/A	N/A	N/A
	TWE090D3, E3	1	230	3	1.50	5.0	34.3	6.3	15	N/A	N/A	N/A	N/A	N/A	N/A	N/A	N/A
	TWE090D3, E3[b]	1	460	3	1.50	2.5	17.0	3.1	15	N/A	N/A	N/A	N/A	N/A	N/A	N/A	N/A
	TWE090DW	1	575	3	1.50	1.8	13.6	2.3	15	N/A	N/A	N/A	N/A	N/A	N/A	N/A	N/A
10	TWE120D1, E1	1	208	1	2.00	8.5	57.4	10.6	20	N/A	N/A	N/A	N/A	N/A	N/A	N/A	N/A
	TWE120D1, E1	1	230	1	2.00	7.7	57.4	9.6	20	N/A	N/A	N/A	N/A	N/A	N/A	N/A	N/A
	TWE120D3, E3	1	208	3	2.00	6.2	33.9	7.8	15	N/A	N/A	N/A	N/A	N/A	N/A	N/A	N/A
	TWE120D3, E3	1	230	3	2.00	5.8	33.9	7.3	15	N/A	N/A	N/A	N/A	N/A	N/A	N/A	N/A
	TWE120D3, E3[b]	1	460	3	2.00	2.9	33.9	3.6	15	N/A	N/A	N/A	N/A	N/A	N/A	N/A	N/A
	TWE120DW, EW	1	575	3	2.00	2.3	14.4	2.9	15	N/A	N/A	N/A	N/A	N/A	N/A	N/A	N/A
12½	TWE150E3	1	208	3	2.00	5.95	23.0	7.4	15	N/A	N/A	N/A	N/A	N/A	N/A	N/A	N/A
	TWE150E3	1	230	3	2.00	5.5	23.0	6.9	15	N/A	N/A	N/A	N/A	N/A	N/A	N/A	N/A
	TWE150E3[b]	1	460	3	2.00	2.75	23.0	3.4	15	N/A	N/A	N/A	N/A	N/A	N/A	N/A	N/A
	TWE150EW	1	575	3	2.00	2.2	18.0	2.8	15	N/A	N/A	N/A	N/A	N/A	N/A	N/A	N/A
15	TWE180E3	1	208	3	3.00	9.4	74.9	11.8	25	N/A	N/A	N/A	N/A	N/A	N/A	N/A	N/A
	TWE180E3	1	230	3	3.00	9.2	74.9	11.5	25	N/A	N/A	N/A	N/A	N/A	N/A	N/A	N/A
	TWE180E3[b]	1	460	3	3.00	4.6	39.3	5.8	15	N/A	N/A	N/A	N/A	N/A	N/A	N/A	N/A
	TWE180EW	1	575	3	3.00	3.4	24.6	4.3	15	N/A	N/A	N/A	N/A	N/A	N/A	N/A	N/A
20	TWE240E3	1	208	3	5.00	14.0	90.8	17.5	35	1	208	3	3.00	9.4	74.9	11.8	25
	TWE240E3	1	230	3	5.00	13.6	103.0	17.0	35	1	230	3	3.00	9.2	74.9	11.5	25
	TWE240E4	1	460	3	5.00	6.6	44.8	8.3	20	1	460	3	3.00	4.6	39.3	5.8	15
	TWE240EW	1	575	3	5.00	5.3	36.2	6.6	15	1	575	3	3.00	3.4	24.6	4.3	15

Continued on next page

(a) For additional information contact product support.
(b) Field wired for 460V.

Table 4. Electrical Characteristics — High and Ultra-High Static Motors — 60 Hz Air Handler[a]

		High Static Evaporator Fan Motor								Ultra-High Static Evaporator Fan Motor							
						Amps								Amps			
Tons	Unit Model Number	No.	Volts	Phase	Hp	FLA	LRA	MCA	MFS	No.	Volts	Phase	Hp	FLA	LRA	MCA	MFS
5	TWE061D1, E1	1	208	1	1.50	6.8	31.5	8.5	20	N/A	N/A	N/A	N/A	N/A	N/A	N/A	N/A
	TWE061D1, E1	1	230	1	1.50	6.2	31.5	7.8	15	N/A	N/A	N/A	N/A	N/A	N/A	N/A	N/A
	TWE061D3, E3	1	208	3	1.50	5.3	34.3	6.6	15	N/A	N/A	N/A	N/A	N/A	N/A	N/A	N/A
	TWE061D3, E3	1	230	3	1.50	5.0	34.3	6.3	15	N/A	N/A	N/A	N/A	N/A	N/A	N/A	N/A
	TWE061D4, E4	1	460	3	1.50	2.5	17.0	3.1	15	N/A	N/A	N/A	N/A	N/A	N/A	N/A	N/A
	TWE061DW	1	575	3	1.50	1.8	13.6	2.3	15	N/A	N/A	N/A	N/A	N/A	N/A	N/A	N/A
7½	TWE090D1, E1	1	208	1	2.00	8.5	57.4	10.6	20	N/A	N/A	N/A	N/A	N/A	N/A	N/A	N/A
	TWE090D1, E1	1	230	1	2.00	7.7	57.4	9.6	20	N/A	N/A	N/A	N/A	N/A	N/A	N/A	N/A
	TWE090D3, E3	1	208	3	2.00	6.2	33.9	7.8	15	1	208	3	3.00	9.4	74.9	11.8	25
	TWE090D3, E3	1	230	3	2.00	5.8	33.9	7.3	15	1	230	3	3.00	9.2	74.9	11.5	25
	TWE090D3, E3[b]	1	460	3	2.00	2.9	33.9	3.6	15	1	460	3	3.00	4.6	39.3	5.8	15
	TWE090DW	1	575	3	2.00	2.3	14.4	2.9	15	1	575	3	3.00	3.4	24.6	4.3	15
10	TWE120D1, E1	N/A	N/A	N/A	N/A	N/A	N/A	N/A	N/A	N/A	N/A	N/A	N/A	N/A	N/A	N/A	N/A
	TWE120D1, E1	N/A	N/A	N/A	N/A	N/A	N/A	N/A	N/A	N/A	N/A	N/A	N/A	N/A	N/A	N/A	N/A
	TWE120D3, E3	1	208	3	3.00	9.4	74.9	11.8	25	N/A	N/A	N/A	N/A	N/A	N/A	N/A	N/A
	TWE120D3, E3	1	230	3	3.00	9.2	74.9	11.5	25	N/A	N/A	N/A	N/A	N/A	N/A	N/A	N/A
	TWE120D3, E3[b]	1	460	3	3.00	4.6	39.3	5.8	15	N/A	N/A	N/A	N/A	N/A	N/A	N/A	N/A
	TWE120DW, EW	1	575	3	3.00	3.4	24.6	4.3	15	N/A	N/A	N/A	N/A	N/A	N/A	N/A	N/A
12½	TWE150E3	1	208	3	3.00	9.4	74.9	11.8	25	1	208	3	5.00	14.0	98.0	17.5	35
	TWE150E3	1	230	3	3.00	9.2	74.9	11.5	25	1	230	3	5.00	13.6	103.0	17	35
	TWE150E3[b]	1	460	3	3.00	4.6	39.3	5.8	15	1	460	3	5.00	6.6	44.8	8.3	20
	TWE150EW	1	575	3	3.00	3.4	24.6	4.3	15	1	575	3	5.00	5.2	36.2	6.5	15
15	TWE180E3	1	208	3	5.00	14.0	98.0	17.5	35	N/A	N/A	N/A	N/A	N/A	N/A	N/A	N/A
	TWE180E3	1	230	3	5.00	13.6	103.0	17	35	N/A	N/A	N/A	N/A	N/A	N/A	N/A	N/A
	TWE180E3[b]	1	460	3	5.00	6.6	44.8	8.3	20	N/A	N/A	N/A	N/A	N/A	N/A	N/A	N/A
	TWE180EW	1	575	3	5.00	5.2	36.2	6.5	15	N/A	N/A	N/A	N/A	N/A	N/A	N/A	N/A
20	TWE240E3	N/A	N/A	N/A	N/A	N/A	N/A	N/A	N/A	1	208	3	7.50	20	114.0	25.0	45
	TWE240E3	N/A	N/A	N/A	N/A	N/A	N/A	N/A	N/A	1	230	3	7.50	17.6	126.0	22.0	40
	TWE240E4	N/A	N/A	N/A	N/A	N/A	N/A	N/A	N/A	1	460	3	7.50	9.0	61.4	11.3	25
	TWE240EW	N/A	N/A	N/A	N/A	N/A	N/A	N/A	N/A	1	575	3	7.50	7.2	49.8	9.0	20

(a) For additional information contact product support.
(b) Field wired for 460V.

Table 5. Unit Wiring — Air Handler — 60Hz

Tons	Unit Model Number	Unit Operating Voltage Range	Minimum Circuit Ampacity	Maximum Fuse or HACR Circuit Breaker Size[a]
5	TWE06D1, E1	187-253	7.5	15
	TWE061D3, E3	187-253	3.1	15
	TWE061D4, E4	414-506	1.5	15
	TWE061DK	342-418	1.6	15
	TWE061DW	518-632	1.6	15
7½	TWE090D1, E1	187-253	8.5	20
	TWE090D3, E3[b]	187-253	6.6	15
	TWE090D3, E3[c]	414-506	3.1	15
	TWE090DK	342-418	3.8	15
	TWE090DW	518-632	2.3	15
10	TWE120D1, E1	187-253	10.6	20
	TWE120D3, E3[b]	187-253	7.8	15
	TWE120D3, E3[c]	414-506	3.6	15
	TWE120DK	342-418	4.1	15
	TWE120DW, EW	518-632	2.9	15
12½	TWE150E3	187-253	7.4	15
	TWE150E3[c]	414-506	3.4	15
	TWE150EK	342-418	4.1	15
	TWE150EW	518-632	2.8	15
15	TWE180E3	187-253	11.8	25
	TWE180E3[c]	414-506	5.8	15
	TWE180EK	342-418	8.2	15
	TWE180EW	518-632	4.3	15
20	TWE240E3	187-253	17.5	35
	TWE240E4	414-506	8.3	20
	TWE240EK	342-418	10.4	15
	TWE240EW	518-632	6.6	15

(a) HACR type circuit breaker per NEC.
(b) When wired for 208-230 volt.
(c) When wired for 460 volt.

Table 6. Unit Wiring with Electric Heat (Single Point Connection) — 5, 7½ and 10 Ton Air Handlers — 60 Hz

Tons	Used With	Heater Model No.	Maximum Fuse Heater KW Rating[a]	Unit Power Supply	Control Stages	Minimum Circuit Ampacity[b]	Maximum Fuse or HACR Circuit Breaker Size[b][c]
5	TWE061D1 TWE061E1	BAYHTRL106A	4.33/5.76	208-230/1/60	1	33.5/37.4	35/40
		BAYHTRL112A	8.65/11.52		1	59.5/67.4	60/70
		BAYHTRL117A	12.98/17.28		1	85.5/97.4	90/100
		BAYHTRL123A	17.31/23.04		2	111.5/127.4[d]	125/150
7½	TWE090D1 TWE090E1	BAYHTRL106A	4.33/5.76	208-230/1/60	1	34.5/37.8	40/40
		BAYHTRL112A	8.65/11.52		1	60.5/67.8[d]	70/70
		BAYHTRL117A	12.98/17.28		1	86.5/97.8	90/100
		BAYHTRL123A	17.31/23.04		2	112.5/127.8[d]	125/150
		BAYHTRL129A	21.63/28.80		2	138.6/157.8[d]	150/175
10	TWE120D1 TWE120E1	BAYHTRL106A	4.33/5.76	208-230/1/60	1	36.6/39.6	40/45
		BAYHTRL112A	8.65/11.52		1	62.6/69.6[d]	70/70
		BAYHTRL117A	12.98/17.28		1	88.6/99.6	90/100
		BAYHTRL123A	17.31/23.04		2	114.6/129.6[d]	125/150
		BAYHTRL129A	21.63/28.80		2	140.7/159.6[d]	150/175
5	TWE061D3 TWE061E3	BAYHTRL305A	3.76/5.00	208-230/3/60	1	16.1/18	20/20
		BAYHTRL310A	7.48/9.96		1	29/33	30/35
		BAYHTRL315A	11.24/14.96		1	42.2/48	45/50
		BAYHTRL325A	18.72/24.92		2	68/77.9[d]	70/80
7½	TWE090D3 TWE090E3	BAYHTRL305A	3.76/5.00	208-230/3/60	1	19.6/21.3	25/25
		BAYHTRL310A	7.48/9.96		1	32.5/36.2	35/40
		BAYHTRL315A	11.24/14.96		1	45.7/51.2	50/60
		BAYHTRL325A	18.72/24.92		2	71.5/82[d]	80/90
		BAYHTRL335A	26.20/34.88		2	98.7/112[e]	100/125
10	TWE120D3 TWE120E3	BAYHTRL305A	3.76/5.00	208-230/3/60	1	21/23	25/30
		BAYHTRL310A	7.48/9.96		1	34/38	35/40
		BAYHTRL315A	11.24/14.96		1	47/53	50/60
		BAYHTRL325A	18.72/24.92		2	73/83[d]	80/90
		BAYHTRL335A	26.20/34.88		2	98.7/113[e]	100/125
5	TWE061D4 TWE061E4	BAYHTRL405A	5	460/3/60	1	10	15
		BAYHTRL410A	9.96		1	17	20
		BAYHTRL415A	14.96		1	25	25
		BAYHTRL425A	24.92		2	40	40
7½	TWE090D3[f] TWE090E3[f]	BAYHTRL405A	5	460/3/60	1	11	15
		BAYHTRL410A	9.96		1	19	20
		BAYHTRL415A	14.96		1	26	30
		BAYHTRL425A	24.92		2	41	45
		BAYHTRL435A	34.88		2	56	60

Table 6. Unit Wiring with Electric Heat (Single Point Connection) — 5, 7½ and 10 Ton Air Handlers — 60 Hz

Tons	Used With	Heater Model No.	Maximum Fuse Heater KW Rating[a]	Unit Power Supply	Control Stages	Minimum Circuit Ampacity[b]	Maximum Fuse or HACR Circuit Breaker Size[b][c]
10	TWE120D3[f] TWE120E3[f]	BAYHTRL405A	5	460/3/60	1	12	15
		BAYHTRL410A	9.96		1	20	20
		BAYHTRL415A	14.96		1	27	30
		BAYHTRL425A	24.92		2	42	45
		BAYHTRL435A	34.88		2	57	60
5	TWE061DW	BAYHTRLW05A	5	575/3/60	1	8	15
		BAYHTRLW10A	9.96		1	15	15
		BAYHTRLW15A	14.96		1	21	20
		BAYHTRLW25A	24.92		2	33	35
7½	TWE090DW	BAYHTRLW05A	5	575/3/60	1	11	15
		BAYHTRLW10A	9.96		1	17	15
		BAYHTRLW15A	14.96		1	23	25
		BAYHTRLW25A	24.92		2	36	35
		BAYHTRLW35A	34.88		2	48	45
10	TWE120DW TWE120EW	BAYHTRLW05A	5	575/3/60	1	10	15
		BAYHTRLW10A	9.96		1	16	15
		BAYHTRLW15A	14.96		1	22	25
		BAYHTRLW25A	24.92		2	35	35
		BAYHTRLW35A	34.88		2	47	45

(a) kW ratings are at: 208/240V for 208-230V air handlers.
480V for 460V air handlers
600V for 575V air handlers
For other than rated voltage, capacity = (Voltage/Rated Voltage)^2 x Rated Capacity.
(b) Any power supply and circuits must be wired and protected in accordance with local codes.
(c) The HACR circuit breaker is for U.S.A. installations only.
(d) Field wire must be rated at least 75°C.
(e) Field wire must be rated at least 90°C.
(f) With motor field converted to 460V.

Table 7. Unit Wiring with Electric Heat (Single Point Connection) — 12½ - 20 Ton Air Handlers

Tons	Used With	Heater Model No.	Heater KW Rating[a]	Unit Power Supply	Control Stages	Minimum Circuit Ampacity[b]	Maximum Fuse or HACR Circuit Breaker Size[b][c]
12½	TWE150E3	BAYHTRM310A	7.51/10.00	208-230/3/60	1	33.5/36.9	35/40
		BAYHTRM320A	14.96/19.92		1	59.3/66.8	60/70
		BAYHTRM330A	22.47/29.92		2	85.5/96.8	90/100
		BAYHTRM350A	37.44/49.84		2	137.3/156.7	150/175
15	TWE180E3	BAYHTRM310A	7.51/10.00	208-230/3/60	1	37.8/41.6	45/45
		BAYHTRM320A	14.96/19.92		1	63.7/71.4	70/80
		BAYHTRM330A	22.47/29.92		2	89.8/101.5	90/110
		BAYHTRM350A	37.44/49.84		2	141.6/161.4[d]	150/175
20	TWE240E3	BAYHTRM310A	7.51/10.00	208-230/3/60	1	44.1/49	60/60
		BAYHTRM320A	14.96/19.92		1	71/79	80/90
		BAYHTRM330A	22.47/29.92		2	97/109	100/110
		BAYHTRM350A	37.44/49.84		2	149/169[d]	150/175
12½	TWE150E3[e]	BAYHTRM410A	10	460/3/60	1	19	20
		BAYHTRM420A	19.92		1	34	35
		BAYHTRM430A	29.92		2	49	50
		BAYHTRM450A	49.84		2	79	80
15	TWE180E3[e]	BAYHTRM410A	10	460/3/60	1	21	25
		BAYHTRM420A	19.92		1	36	40
		BAYHTRM430A	29.92		2	51	60
		BAYHTRM450A	49.84		2	81	90
20	TWE240E4	BAYHTRM410A	10	460/3/60	1	24	30
		BAYHTRM420A	19.92		1	39	40
		BAYHTRM430A	29.92		2	54	60
		BAYHTRM450A	49.84		2	84	90
12½	TWE150EW	BAYHTRMW10A	10	575/3/60	1	15	15
		BAYHTRMW20A	19.92		1	27	30
		BAYHTRMW30A	29.92		2	39	40
		BAYHTRMW50A	49.84		2	63	70
15	TWE180EW	BAYHTRMW10A	10	575/3/60	1	17	20
		BAYHTRMW20A	19.92		1	30	30
		BAYHTRMW30A	29.92		2	42	45
		BAYHTRMW50A	49.84		2	67	70
20	TWE240EW	BAYHTRMW10A	10	575/3/60	1	20	25
		BAYHTRMW20A	19.92		1	32	35
		BAYHTRMW30A	29.92		2	45	45
		BAYHTRMW50A	49.84		2	70	70

(a) kW ratings are at: 208/240V for 208-230V air handlers.
480V for 460V air handlers
600V for 575V air handlers
For other than rated voltage, capacity = (Voltage/Rated Voltage)^2 x Rated Capacity.
(b) Any power supply and circuits must be wired and protected in accordance with local codes.
(c) The HACR circuit breaker is for U.S.A. installations only.
(d) Field wire must be rated at least 90°C.
(e) With motor field wired for 460V.

Table 8. Electrical Characteristics — Standard Motor — 50 Hz Air Handler

Tons	Unit Model Number	Standard Evaporator Fan Motor				
		No.	Volts	Phase	Amps FLA	Amps LRA
4.5	TWE051DD	1	380	3	1.4	8.0
		1	415	3	1.0	8.36
6.25	TWE076DD	1	380	3	3.1	17
		1	415	3	3.2	16.8
8.33	TWE101DD, ED	1	380	3	3.4	17.3
		1	415	3	3.2	19
10.4	TWE126ED	1	380	3	3.2	35
		1	415	3	3.1	35
13.0	TWE156ED	1	380	3	4.0	33.1
		1	415	3	4.0	36.1
16.7	TWE201ED	1	380	3	8.0	43.2
		1	415	3	8.0	48.6

Table 9. Unit Wiring — Air Handler — 50 Hz

Tons	Unit Model No.	Minimum Unit Operating Voltage Range	Maximum Fuse Circuit Ampacity	Size or Maximum Circuit Breaker
4.5	TWE051DD	380/415	4	15
6.25	TWE076DD	380/415	5	15
8.33	TWE101DD, ED	380/415	5	15
10.4	TWE126ED	380/415	5	15
13.0	TWE156ED	380/415	6	15
16.7	TWE201ED	380/415	10	15

Table 10. Unit Wiring With Electric Heat (Single Point Connection) — Air Handlers — 50 Hz[a][b]

Heater Model No.	Heater kW Rating[c]	To Use with Unit	Control Stages	Minimum Circuit Ampacity [d]	Maximum Fuse Breaker Size 2
BAYHTRL405A	5.00	TWE051DD	1	13	15
BAYHTRL410A	9.96		1	22	25
BAYHTRL415A	14.96		1	31	35
BAYHTRL425A	24.92		2	49	50
BAYHTRL405A	5.00	TWE076DD	1	14	15
BAYHTRL410A	9.96		1	23	25
BAYHTRL415A	14.96		1	32	35
BAYHTRL425A	24.92		2	50	50
BAYHTRL435A	34.88		2	68	70
BAYHTRL405A	5.00	TWE101DD, TWE101ED	1	14	15
BAYHTRL410A	9.96		1	23	25
BAYHTRL415A	14.96		1	32	35
BAYHTRL425A	24.92		2	50	50
BAYHTRL435A	34.88		2	68	70
BAYHTRM410A	10.00	TWE126ED	1	19	20
BAYHTRM420A	19.92		1	41	45
BAYHTRM430A	24.92		2	59	60
BAYHTRM450A	49.84		2	94	100
BAYHTRM410A	10.00	TWE156ED	1	23	25
BAYHTRM420A	19.92		1	41	45
BAYHTRM430A	24.92		2	59	60
BAYHTRM450A	49.84		2	95	100
BAYHTRM410A	10.00	TWE201ED	1	29	30
BAYHTRM420A	19.92		1	46	50
BAYHTRM430A	24.92		2	65	70
BAYHTRM450A	49.84		2	100	100

(a) Field wire must be rated at least 167°F (75°C).
(b) Field wire must be rated at least 194°F (90°C).
(c) kW ratings are at 400v for 3 phase, 400v air handlers
For other than rated voltage,
Capacity = (Voltage/Rated Voltage)^2 x Rated Capacity and kW = (Voltage/Rated Voltage)^2 Rated kW.
(d) Any power supply and circuits must be wired and protected in accordance with local codes. MCA and Maximum Fuse Size is based on 400V.

Installation

Horizontal Suspension

If the air handler will be suspended, use a suspension mounting kit to isolate the unit from the structure. This is usually accomplished through the use of spring or rubber isolators, which are offered as an accessory. Mounting rods must be field supplied. Isolator selection is dependent upon total unit weight including accessories. Approximate unit weights are provided in Table 1 and Table 2, p. 7.

NOTICE
Equipment Damage!

Before hanging the unit on suspension rods, reinforce the cabinet around the suspension holes by using a large washer inside the cabinet. Washers should be between the skin of the air handler and the nut on the suspension rod.

Align holes in the cabinet with structural supports and secure suspension rods to the structure, then to the air handler cabinet. If hole locations do not permit proper alignment with existing structure, it may be necessary to field fabricate cross members on existing structural beams.

Note: *When other than bottom return is to be used, side panel removed for return duct installation must be secured over the bottom opening.*

Leveling

This air handler has a double sloped drain pan. In order to assure proper drainage along the length of the drain pan, it is important to have the unit properly leveled. Be sure the air handler is level.

Auxiliary Drain Pan

A field fabricated, auxiliary drain pan should be installed under the unit for all horizontal applications and when air handlers are installed above ceilings or in other locations where condensate overflow may cause damage. This drain pan will eliminate any excess condensation that may be due to extreme humidity or an obstructed drain in the primary drain pan. Drain lines from this pan must be installed, but should not be connected to the primary drain line from the unit. Isolate the auxiliary drain pan from both the air handler and the structure.

⚠ WARNING
Fiberglass Wool!

Product contains fiberglass wool. Disturbing the insulation in this product during installation, maintenance or repair will expose you to airborne particles of glass wool fibers and ceramic fibers known to the state of California to cause cancer through inhalation. Glass wool fibers may also cause respiratory, skin or eye irritation.

Precautionary Measures

- Avoid breathing fiberglass dust.
- Use a NIOSH approved dust/mist respirator.
- Avoid contact with the skin or eyes. Wear long-sleeved, loose-fitting clothing, gloves, and eye protection.
- Wash clothes separately from other clothing: rinse washer thoroughly.

- Operations such as sawing, blowing, tear-out, and spraying may generate fiber concentrations requiring additional respiratory protection. Use the appropriate NIOSH approved respirator in these situations.

First Aid Measures

Eye Contact - Flush eyes with water to remove dust. If symptoms persist, seek medical attention.

Skin Contact - Wash affected areas gently with soap and warm water after handling.

Refrigerant Piping

Installation, brazing, leak testing and evacuation of refrigerant lines are covered in the installation instructions packaged with the outdoor unit. Read the instructions before beginning installation of refrigerant lines.

Locate cloth bag(s) attached to the refrigerant tube of the coil that contains a stainless steel clamp and insulation material (approximately 9" long by 4" wide) for each refrigerant circuit. This is for attaching and insulating the expansion valve bulb (s) to the suction line(s).

On air handlers that will have refrigerant lines entering the cabinet from the left side, remove the split rubber grommet from the knockout in the end of the air handler. Uncoil the cap tube with the bulb attached at the expansion valve and place the grommet on the cap tube. With the grommet around the tube, push the bulb through the hole and position the grommet back into its original position (one bulb and cap tube on single circuit units and two bulbs and cap tubes on dual circuit units).

Attach the bulb(s) on a horizontal section of tube where the entire length of the bulb is in contact with the tube, (see Figure 14, p. 31) approximately 45 degrees off vertical (a 10 or 2 o'clock position), 10 to 12 inches outside of the air handler.

On air handlers that will have refrigerant lines entering the cabinet from the right side, the bulb(s) should be attached to the suction tube(s) inside the cabinet in the same manner as above, approximately 10" from the right end of the unit.

After attaching to the suction line(s), either inside or outside of the cabinet, wrap the insulation around the bulb(s) and suction tube(s). Refrigerant piping should be insulated.

Figure 14. Remote Bulb Installation

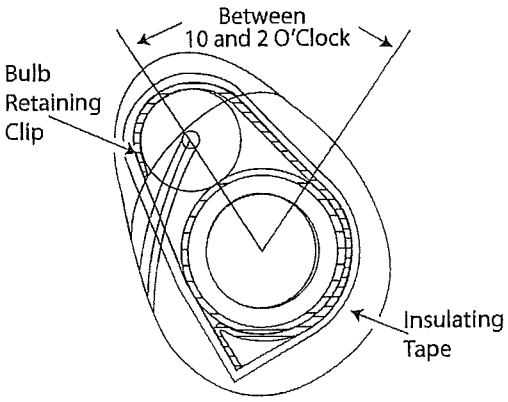

NOTICE

Equipment Damage!

Ensure that the refrigerant lines passing through the cabinet are not resting on sharp sheet metal edges and that the bulb(s) are attached to the suction line of the same circuit.

Condensate Piping

The drain pan condensate connection is a female slip joint type for 1" Schedule 40 PVC pipe. Use PVC cement and tubing as required (field supplied) to construct a trap. A union or flexible tubing and clamps may be installed if the drain pan is to be removed periodically for cleaning.

Important: *When air handler is installed in the vertical position and close proximity trapping of condensate is required, use of a subbase accessory to raise the air handler for clearance of the drain trap is recommended. See Figure 15 for a typical drain trap assembly.*

Figure 15. Typical Drain Trap Assembly

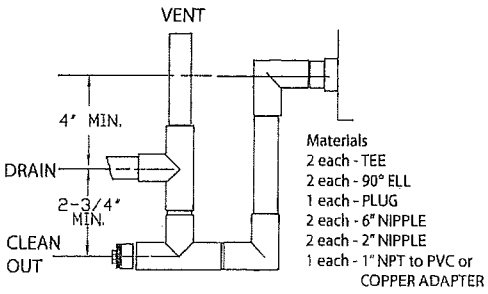

Filters

Air handlers are shipped with throwaway filters installed. For replacement filters consult the air handler service facts for correct size and number.

To replace filters from the end of the unit, remove lower access panel (either end) and slide old filters out and replace with new ones. To replace from the front of the unit, remove one "L" shaped angle. Remove and replace filters and reinstall "L" shaped angle. See Figure 16.

To convert from 1" filter to a 2" filter on units so equipped, remove lower access panels from both ends of the air handler. Remove screws and rotate the "L" shaped angles from both the top and bottom of the filter track 180° to increase the width of the filter opening.

Figure 16. Filter Replacement

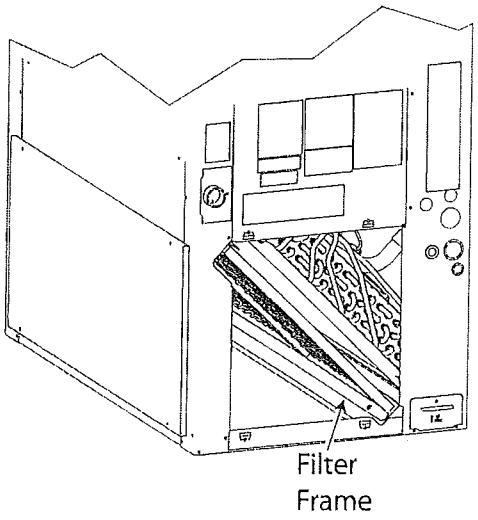

Duct Connections

The supply and return ducts should be connected to the unit with flame retardant duct connectors to reduce vibration transmission. The return duct should be sized to the same dimensions as the return inlet of the unit.

Important: *Duct flanges are provided for attachment of the duct work and are packaged on the outside of the cabinet for TWE150, 180 and 240 and TWE126, 156 and 201. The duct flanges are fastened to the top coil support bracket in the TWE051, 061, 076, 090, 101 and 120 models.*

Air Flow Settings

Unit is shipped for nominal airflow with nominal static pressure. Please refer to fan performance table in either the product catalog or unit service facts and select the proper drive package for each application. Failure to do so could result in improper airflow causing coil frosting or condensate management problems. Condensate management problems such as water blow off could be the

result of too great of air face velocity across the coil. To ensure proper operation refer to fan belt adjustment procedures, p. 38.

Electrical Connections

⚠WARNING
Hazardous Voltage w/Capacitors!

Disconnect all electric power, including remote disconnects and discharge all motor start/run capacitors before servicing. Follow proper lockout/tagout procedures to ensure the power cannot be inadvertently energized. For variable frequency drives or other energy storing components provided by Trane or others, refer to the appropriate manufacturer's literature for allowable waiting periods for discharge of capacitors. Verify with an appropriate voltmeter that all capacitors have discharged. Failure to disconnect power and discharge capacitors before servicing could result in death or serious injury.

⚠WARNING
Grounding Required!

Follow proper local and state electrical code on requirements for grounding. Failure to follow code could result in death or serious injury.

1. All electrical lines, sizing, protection, and grounding must be in accordance with the National Electric Code and local codes.
2. Isolate conduit whenever vibration transmission may cause a noise problem within the building structure.
3. Ensure all connections are tight and no wires exposed.
4. All accessories must be installed and wired according to the instructions packaged with that accessory.

For air handler power entry only, or for dual power entry (power entry for air handler and power entry for electric heats), the electrical connections are made in the fan control box located in the right side of the air handler and electric heater respectively. Wiring entrance is through holes provided in the end of the air handler cabinet, Figure 17. Breaker or fuse size can be selected using the nameplates attached to the unit and electric heater (see Table 6, p. 25).

Figure 17. Electrical Entries

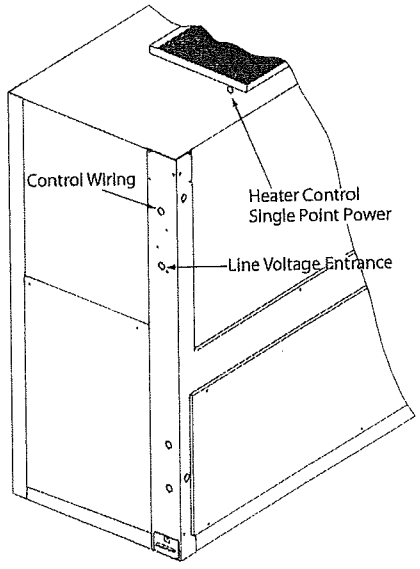

Table 11. Recommended T'stat Wire Size

Wire Size (Gauge)	Maximum Wire Length Physical distance between Unit & T'stat
22	30 Feet
20	50 Feet
18	75 Feet
16	125 Feet
14	200 Feet

Checkout Procedure

Complete the following "installation checklist" once installation of field wiring connections is complete. All operational checks (unit running) must be made after the outdoor unit is installed and system interconnection is complete.

Installation Checklist

⚠WARNING
Hazardous Voltage!

Disconnect all electric power, including remote disconnects before servicing. Follow proper lockout/tagout procedures to ensure the power can not be inadvertently energized. Failure to disconnect power before servicing could result in death or serious injury.

Complete this checklist once the unit is installed to verify that all recommended procedures have been accomplished before the system is started. Operational checks cannot be performed until the outdoor unit is installed and system interconnection is complete.

1. Verify that the unit electrical power is disconnected.
2. Inspect all field wiring connections. All connections should be clean and tight.
3. Inspect unit ground connection(s). Ground must comply with all applicable codes.
4. Inspect unit suspension arrangement (if used). Unit position must be secure. Remove any tools or debris found in or near the unit.
5. Inspect duct outlets. Outlets must be open and unrestricted.
6. Inspect unit drain lines. Pipe connections must be tight and drain line unrestricted.
7. Inspect fan assembly to insure all moving parts move freely.
8. If unit is horizontally mounted, make sure secondary drain pan has been installed.
9. Inspect unit for proper filters, securely installed and not touching the coil surface. All cabinet panels must be secure.
10. Instruct owner/operator on proper system operating and maintenance procedure.

Electrical Wiring

⚠WARNING
Hazardous Voltage w/Capacitors!

Disconnect all electric power, including remote disconnects and discharge all motor start/run capacitors before servicing. Follow proper lockout/tagout procedures to ensure the power cannot be inadvertently energized. For variable frequency drives or other energy storing components provided by Trane or others, refer to the appropriate manufacturer's literature for allowable waiting periods for discharge of capacitors. Verify with an appropriate voltmeter that all capacitors have discharged. Failure to disconnect power and discharge capacitors before servicing could result in death or serious injury.

Note: *For additional information regarding the safe discharge of capacitors, see PROD-SVB06A-EN or PROD-SVB06A-FR*

⚠ WARNING
Grounding Required!

Follow proper local and state electrical code on requirements for grounding. Failure to follow code could result in death or serious injury.

Thermostat and Control Connections for Electromechanical Controls

Wiring shown with dashed lines is to be furnished and installed by the customer. All customer-supplied wiring must be copper only and must conform to NEC and local electrical codes. Codes may require line of sight between disconnect switch and unit.

1. Observe all notes on the wiring diagrams.
2. Mount the thermostat in the desired location.
3. Install color coded low voltage cables between outdoor unit, indoor unit and thermostat.
4. Connect low voltage control wiring to the low voltage terminal board located on the side of the fan control box per the typical interconnecting wiring diagrams.

Note: *When electric heater accessory is used, single point power entry or dual point power entry is field optional. Single point power entry option is through electric heater only.*

Figure 18. Thermostat and Control Connections — Electromechanical Controls

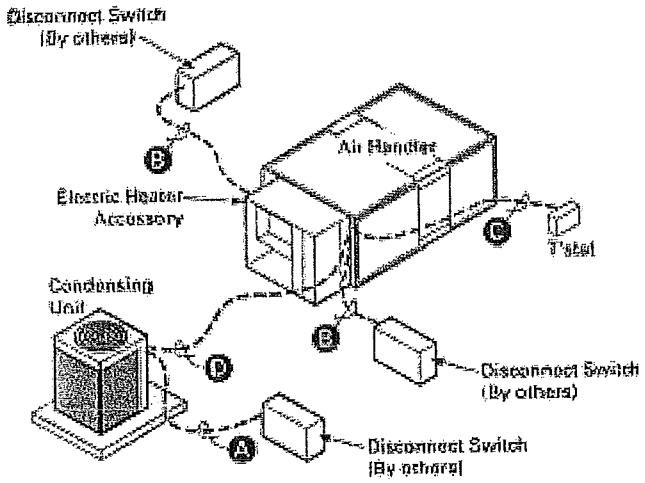

60 Hz - TTA/TWE

TTA073D/TWE090D	TTA150E/TWE150E	(2) TTA073D/TWE150E
TTA090D/TWE090D	TTA180E/TWE180E	(2) TTA090D/TWE180E
TTA090D/TWE120D	TTA180F/TWE180E[a]	(2) TTA120D/TWE240E
TTA120D/TWE120D	TTA180E/TWE240E	(2) TTA120F/TWE240E
TTA120E/TWE120E	TTA240E/TWE240E	
TTA120F/TWE120D	TTA240F/TWE240E[a]	

50 Hz - TTA/TWE

TTA061DD/TWE076DD	TTA101FD/TWE101DD	TTA201FD/TWE201ED[a]
TTA076DD/TWE076DD	TTA126ED/TWE126ED	(2) TTA061DD/TWE126ED
TTA076DD/TWE101DD	TTA156ED/TWE156ED	(2) TTA076DD/TWE156ED
TTA086DD/TWE101DD	TTA156FD/TWE156ED[a]	(2) TTA101DD/TWE201ED
TTA101DD/TWE101DD	TTA156ED/TWE201ED	(2) TTA101FD/TWE201ED
TTA101ED/TWE101ED	TTA201ED/TWE201ED	

(a) Need to manifold the dual circuit indoor unit when connecting to a Manifolded outdoor unit.

Field Wiring:

A. 3 power wires. Line voltage for 3 phase (2 wires for single phase)

B. 3 power wires. Line voltage for 3 phase (2 wires for single phase)

C. **Cooling only thermostat**: 3 to 7 wires depending on stages of electric heat

D. 3 to 7 wires depending on type of outdoor unit(s)

Thermostat and Control Connections for ReliaTel™ Controls

Wiring shown with dashed lines is to be furnished and installed by the customer. All customer-supplied wiring must be copper only and must conform to NEC and local electrical codes. Codes may require line of sight between disconnect switch and unit.

1. Observe all notes on the wiring diagrams.
2. Mount the thermostat in the desired location.
3. Install color coded low voltage cables between outdoor unit, indoor unit and thermostat.
4. Connect low voltage control wiring to the low voltage terminal board located on the side of the fan control box per the typical interconnecting wiring diagrams.

Notes:

1. When electric heater accessory is used, single point power entry or dual point power entry is field optional. Single point power entry option is through electric heater only.
2. ***Choose only one of the following; Thermostat, Zone Sensor, or NSB Panel.

Figure 19. Thermostat and Control Connections — ReliaTel™ Controls

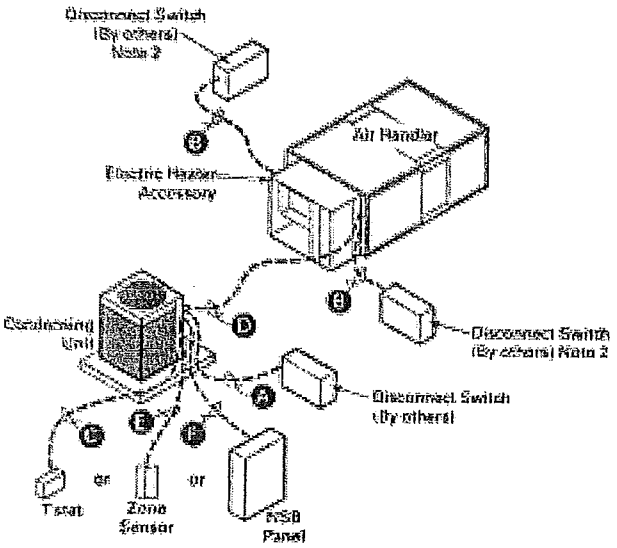

60 Hz - TTA/TWE

TTA073D/TWE090D	TTA150E/TWE150E	(2) TTA073D/TWE150E
TTA090D/TWE090D	TTA180E/TWE180E	(2) TTA090D/TWE180E
TTA090D/TWE120D	TTA180F/TWE180E[(a)]	(2) TTA120D/TWE240E
TTA120D/TWE120D	TTA180E/TWE240E	(2) TTA120F/TWE240E
TTA120E/TWE120E	TTA240E/TWE240E	
TTA120F/TWE120D	TTA240F/TWE240E[(a)]	

50 Hz - TTA/TWE

TTA061DD/TWE076DD	TTA101FD/TWE101DD	TTA201FD/TWE201ED[(a)]
TTA076DD/TWE076DD	TTA126ED/TWE126ED	(2) TTA061DD/TWE126ED
TTA076DD/TWE101DD	TTA156ED/TWE156ED	(2) TTA076DD/TWE156ED
TTA086DD/TWE101DD	TTA156FD/TWE156ED[(a)]	(2) TTA101DD/TWE201ED
TTA101DD/TWE101DD	TTA156ED/TWE201ED	(2) TTA101FD/TWE201ED
TTA101ED/TWE101ED	TTA201ED/TWE201ED	

60 Hz - TWA/TWE

TWA073D/TWE090D	TWA180E/TWE180E	(2) TWA090D/TWE180E
TWA090D/TWE090D	TWA240E/TWE240E	(2) TWA120D/TWE240E
TWA120D/TWE120D	(2) TWA073D/TWE150E	

50 Hz - TWA/TWE

TWA061DD/TWE076DD	TWA101DD/TWE101DD	TWA201ED/TWE201ED
TWA076DD/TWE076DD	TWA156ED/TWE156ED	

(a) Need to manifold the dual circuit indoor unit when connecting to a Manifolded outdoor unit.

Field Wiring:

A. 3 power wires, line voltage for 3 phase, (2 power wires for single phase)

B. 3 power wires, line voltage for 3 phase, (2 power wires for single phase)

C. **Cooling only thermostat**: 3 to 7 wires depending on stages of electric heat
Zone Sensor: 4 to 10 wires depending on zone sensor model [1]

D. 3 to 7 wires depending on type of outdoor unit(s).

[1] See Zone Sensor wiring instructions for wiring information (ReliaTel Controls only).

Maintenance

Perform all of the indicated maintenance procedures at the intervals scheduled. This will prolong the life of the unit and reduce the possibility of costly equipment failure.

Fan Belt Adjustment

⚠WARNING
Rotating Components!

Disconnect all electric power, including remote disconnects before servicing. Follow proper lockout/tagout procedures to ensure the power can not be inadvertently energized. Failure to disconnect power before servicing could result in death or serious injury.

The fan belts must be inspected periodically to assure proper unit operation.

Replacement is necessary if the belts appear frayed or worn.

When removing or installing the new belts, do not stretch them over the sheaves. Loosen the belts using the belt tension adjustment bolts on the motor mounting base.

Once the new belts are installed, using a Browning or Gates tension gauge (or equivalent) illustrated in Figure 20; adjust the belt tension as follows;

1. To determine the appropriate belt deflection;
   a. Measure the center-to-center shaft distance (in inches) between the fan and motor sheaves.
   b. Divide the distance measured in Step 1a by 64; the resulting value represents the amount of belt deflection that corresponds to the proper belt tension.
2. Set the large O-ring on the belt tension gauge at the deflection value determined in Step 1b.
3. Set the small O-ring at zero on the force scale of the gauge plunger.
4. Place the large end of the gauge at the center of the belt span; then depress the gauge plunger until the large O-ring is even with the top of the next belt or even with a straightedge placed across the fan and motor sheaves.
5. Remove the belt tension gauge. The small O-ring now indicates a number other than zero on the plunger's force scale. This number represents the force (in pounds) required to give the needed deflection.
6. Compare the "force" scale reading (Step 5) with the appropriate "force" value listed in Table 12, p. 39. If the "force" reading is outside the range, readjust the belt tension.

Note: *Actual belt deflection "force" must not exceed the maximum "force" value shown in* Figure 20.

Recheck the belt tension at least twice during the first 2 to 3 days of operation. Belt tension may decrease until the new belts are "run in."

Figure 20. Belt tension gauge

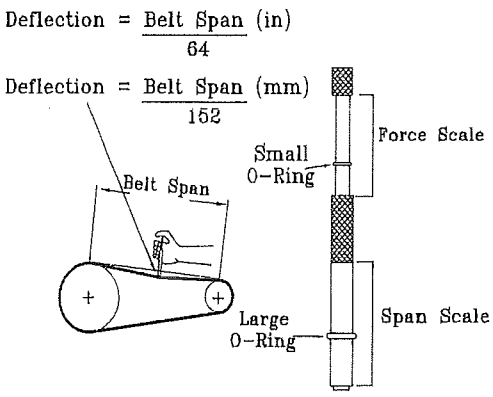

Table 12. Belt Tension Measurement and Deflection

Belts Cross Section	Small Pitch Diameter Range	Deflection Force (Lbs.)			
		Standard V-Belt		V-Belt with Molded Notches	
		Min.	Max.	Min.	Max.
A	3.0 - 3.6	3	4 1/2	3 7/8	5 1/2
	3.8 - 4.8	3 1/2	5	4 1/2	6 1/4
	5.0 - 7.0	4	5 1/2	5	6 7/8
B	3.4 - 4.2	4	5 1/2	5 3/4	8
	4.4 - 5.6	5 1/8	7 1/8	6 1/2	9 1/8
	5.8 - 8.8	6 3/8	8 3/4	7 3/8	10 1/8

Monthly

Conduct the following maintenance inspections once per month.

The following warning complies with State of California law, Proposition 65.

⚠ WARNING
Fiberglass Wool!

Product contains fiberglass wool. Disturbing the insulation in this product during installation, maintenance or repair will expose you to airborne particles of glass wool fibers and ceramic fibers known to the state of California to cause cancer through inhalation. Glass wool fibers may also cause respiratory, skin or eye irritation.

⚠ WARNING
Hazardous Voltage w/Capacitors!

Disconnect all electric power, including remote disconnects and discharge all motor start/run capacitors before servicing. Follow proper lockout/tagout procedures to ensure the power cannot be inadvertently energized. For variable frequency drives or other energy storing components provided by Trane or others, refer to the appropriate manufacturer's literature for allowable waiting periods for discharge of capacitors. Verify with an appropriate voltmeter that all capacitors have discharged. Failure to disconnect power and discharge capacitors before servicing could result in death or serious injury.

NOTICE
Operating Under Vacuum

Do not operate or apply power to the compressor while under a vacuum. Failure to follow these instructions will result in compressor failure.

1. Inspect air filters and clean (or replace) if necessary.
2. Check unit wiring to ensure all connections are tight and that the wiring insulation is intact.
3. Check drain pans and condensate piping to insure they are free of obstacles.
4. Manually rotate the indoor fan to ensure proper operation.
5. Inspect the evaporator coils for dirt and debris. If the coils appear dirty, clean them.
6. Observe indoor fan operation and correct any unusual or excessive vibration. Clean blower wheels as needed.

Annually (Cooling Season)

The following maintenance procedures must be performed at the beginning of each cooling season to ensure efficient unit operation.

1. Perform all of the monthly maintenance inspections.
2. With the unit operating, check unit superheat and record the reading in the "Maintenance Log."
3. Remove any accumulation of dust and/or dirt from the unit casing.
4. Remove corrosion from any surface and repaint. Check the gasket around the control panel door to ensure it fits correctly and is in good condition to prevent water leakage.
5. Inspect the evaporator fan belt. If it is worn or frayed, replace it.
6. Inspect the control panel wiring to ensure that all connections are tight and that the insulation is intact.
7. Check refrigerant piping and fittings for leaks.
8. Inspect the evaporator coils for dirt and debris. If the coils appear dirty, clean them.

Coil Cleaning

Regular coil maintenance, including annual cleaning-enhances the unit's operating efficiency by minimizing:

- compressor head pressure and amperage draw;
- water carryover;
- fan brake horsepower and
- static pressure losses.

At least once each year-or more often if the unit is located in a "dirty" environment-clean the coil using the instructions outlined below. Be sure to follow these instructions as closely as possible to avoid damaging the coils. To clean refrigerant coils, use a soft brush and a sprayer. Contact your local Parts Center for appropriate detergents.

1. Remove enough panels from the unit to gain safe access to coil.

⚠WARNING
No Step Surface!

Do not walk on the sheet metal base. Walking on the base could cause the supporting metal to collapse. Failure of the base could result in death or serious injury.

2. Straighten any bent coil fins with a fin comb.
3. Remove loose dirt and debris from both sides of the coil with a soft brush.
4. Mix the detergent with water according to the manufacturer's instructions. If desired, heat the solution to 150° F maximum to improve its cleansing capability.
5. Pour the cleaning solution into the sprayer.
6. Spray the leaving-airflow side of the coil first; then spray the opposite side of the coil. Allow the cleaning solution to stand on the coil for five minutes.
7. Rinse both sides of the coil with cool, clean water.
8. Inspect both sides of the coil; if it still appears to be dirty, repeat Steps 7 and 8.
9. Reinstall all of the components and panels removed in Step 1; then restore power to the unit.
10. Using a fin comb, straighten any coil fins that were inadvertently bent during the cleaning process.

Precautionary Measures

- Avoid breathing fiberglass dust.
- Use a NIOSH approved dust/mist respirator.
- Avoid contact with the skin or eyes. Wear long-sleeved, loose-fitting clothing, gloves, and eye protection.
- Wash clothes separately from other clothing: rinse washer thoroughly.
- Operations such as sawing, blowing, tear-out, and spraying may generate fiber concentrations requiring additional respiratory protection. Use the appropriate NIOSH approved respirator in these situations.

First Aid Measures

Eye Contact - Flush eyes with water to remove dust. If symptoms persist, seek medical attention.

Skin Contact - Wash affected areas gently with soap and warm water after handling.

Maintenance Log

Date	Ambient Temp. (°F)	Evaporator Entering Air		Compressor				Superheat (°F) (at compressor)		Subcooling (°F) (at service valve)	
		Dry Bulb	Wet Bulb	Suction Pressure		Discharge Pressure					
				(C1)	(C2)	(C1)	(C2)	Circuit #1	Circuit #2	Circuit #1	Circuit #2

Note: Perform each inspection once per month (during cooling season) while unit is operating

Warranty

Central Air Conditioner

TWE

This warranty is extended by Trane to the original purchaser and to any succeeding owner of the real property to which the Air Conditioner is originally affixed, and applies to products purchased and retained for use within the U.S.A. and Canada. There is no warranty against corrosion, erosion or deterioration.

Warrantor warrants for a period of 12 months from initial start-up or 18 months from date of shipment, whichever is less, that the products covered by this warranty (1) are free from defects in material and manufacture, and (2) have the capacities and ratings set forth in catalogs and bulletins; provided, that no warranty is made against corrosion, erosion or deterioration. Warrantor's obligations and liabilities under this warranty are limited to furnishing, F.O.B. factory replacement parts (or equipment at the option of Warrantor) for all Warrantor's products not conforming to this warranty. Warrantor shall not be obligated to pay for the cost of lost refrigerant. No liability whatever shall attach to Warrantor until said products have been paid for and then said liability shall be limited to the purchase price of the equipment shown to be defective.

THE WARRANTY AND LIABILITY SET FORTH HEREIN ARE IN LIEU OF ALL OTHER WARRANTIES AND LIABILITIES, WHETHER IN CONTRACT OR IN NEGLIGENCE, EXPRESS OR IMPLIED, IN LAW OR IN FACT, INCLUDING IMPLIED WARRANTIES OF MERCHANTABILITY AND FITNESS FOR PARTICULAR USE, AND IN NO EVENT SHALL WARRANTOR BE LIABLE FOR ANY INCIDENTAL OR CONSEQUENTIAL DAMAGES.

Some states do not allow limitations on how long an implied warranty lasts or do not allow the exclusion or limitation of incidental or consequential damages, so the above limitation or exclusion may not apply to you. This warranty gives you specific legal rights, and you may also have other rights which vary from state to state.

Trane, 2701 Wilma Rudolph Blvd., Clarksville, TN 37040-1008

Attention: Manager, Product Service

TW-338-0597

* This warranty is for commercial usage of said equipment and not applicable when the equipment is used for a residential application. Commercial use is any application where the end purchaser uses the product for other than personal, family or household purposes.

Commercial Equipment Rated 20 Tons and Larger and Related Accessories (Parts Only)

Products Covered — This warranty is extended by Trane and applies only to commercial equipment rated 20 tons and larger and related accessories purchased and retained for use within the U.S.A. and Canada.

Warrantor warrants for a period of 12 months from initial start-up or 18 months from date of shipment, whichever is less, that the products covered by this warranty (1) are free from defects in material and manufacture, and (2) have the capacities and ratings set forth in catalogs and bulletins; provided, that no warranty is made against corrosion, erosion or deterioration. Warrantor's obligations and liabilities under this warranty are limited to furnishing, F.O.B. factory replacement parts (or equipment at the option of Warrantor) for all Warrantor's products not conforming to this warranty. Warrantor shall not be obligated to pay for the cost of lost refrigerant. No liability whatever shall attach to Warrantor until said products have been paid for and then said liability shall be limited to the purchase price of the equipment shown to be defective.

Warranty

THE WARRANTY AND LIABILITY SET FORTH HEREIN ARE IN LIEU OF ALL OTHER WARRANTIES AND LIABILITIES, WHETHER IN CONTRACT OR IN NEGLIGENCE, EXPRESS OR IMPLIED, IN LAW OR IN FACT, INCLUDING IMPLIED WARRANTIES OF MERCHANTABILITY AND FITNESS FOR PARTICULAR USE, AND IN NO EVENT SHALL WARRANTOR BE LIABLE FOR ANY INCIDENTAL OR CONSEQUENTIAL DAMAGES.

Some states do not allow limitations on how long an implied warranty lasts or do not allow the exclusion or limitation of incidental or consequential damages, so the above limitation or exclusion may not apply to you. This warranty gives you specific legal rights, and you may also have other rights which vary from state to state.

Trane —Warrantor, 2701 Wilma Rudolph Blvd., Clarksville, TN 37040

GW-598-4799

Wiring Diagram Matrix

DIAGRAM NO.	DIAGRAM TYPE	UNIT MODEL NO'S
2313-0401	Power/Control Diagram	TWE051DD00AA, TWE061D300AA, TWE061D400AA, TWE061DK00AA, TWE061DW00AA, TWE076DD00AA, TWE090D300AA, TWE090DK00AA, TWE090DW00AA, TWE101DD00AA, TWE120D300AA, TWE120DK00AA, TWE120DW00AA
2313-0402	Power/Control Diagram	TWE061D100AA, TWE090D100AA, TWE120D100AA
2313-0431	Power/Control Diagram	TWE061E300AA, TWE061E400AA, TWE090E300AA, TWE0101ED00AA, TWE120E300AA, TWE120EK00AA, TWE120EW00AA, TWE126ED00AA, TWE150E300AA, TWE150EK00AA, TWE150EW00AA, TWE156ED00AA, TWE180E300AA, TWE180EK00AA, TWE180EW00AA, TWE201ED00AA, TWE240E300AA, TWE240E400AA, TWE240EK00AA, TWE240EW00AA
2313-0432	Power/Control Diagram	TWE061E100AA, TWE090E100AA, TWE120E100AA

Note: **Wiring diagrams are available through e-Library or by contacting your local sales office**

The manufacturer optimizes the performance of homes and buildings around the world. A business of Ingersoll Rand, the leader in creating and sustaining safe, comfortable and energy efficient environments,the manufacturer offers a broad portfolio of advanced controls and HVAC systems, comprehensive building services, and parts. For more information, visit www.IRCO.com.

The manufacturer has a policy of continuous product and product data improvement and reserves the right to change design and specifications without notice.

© 2011 Trane All rights reserved
SSA-SVX06A-EN 31 Mar 2011
Supersedes SSA-SVX06A-EN (Nov 2009)

Ingersoll Rand

Tag: AHU-6A , AHU-6B / ACCU-6A, ACCU-6B

Specification: 15741

Manufacture: Trane Split system AHU

Drawing reference: M211

Location: B3 Ramp Level

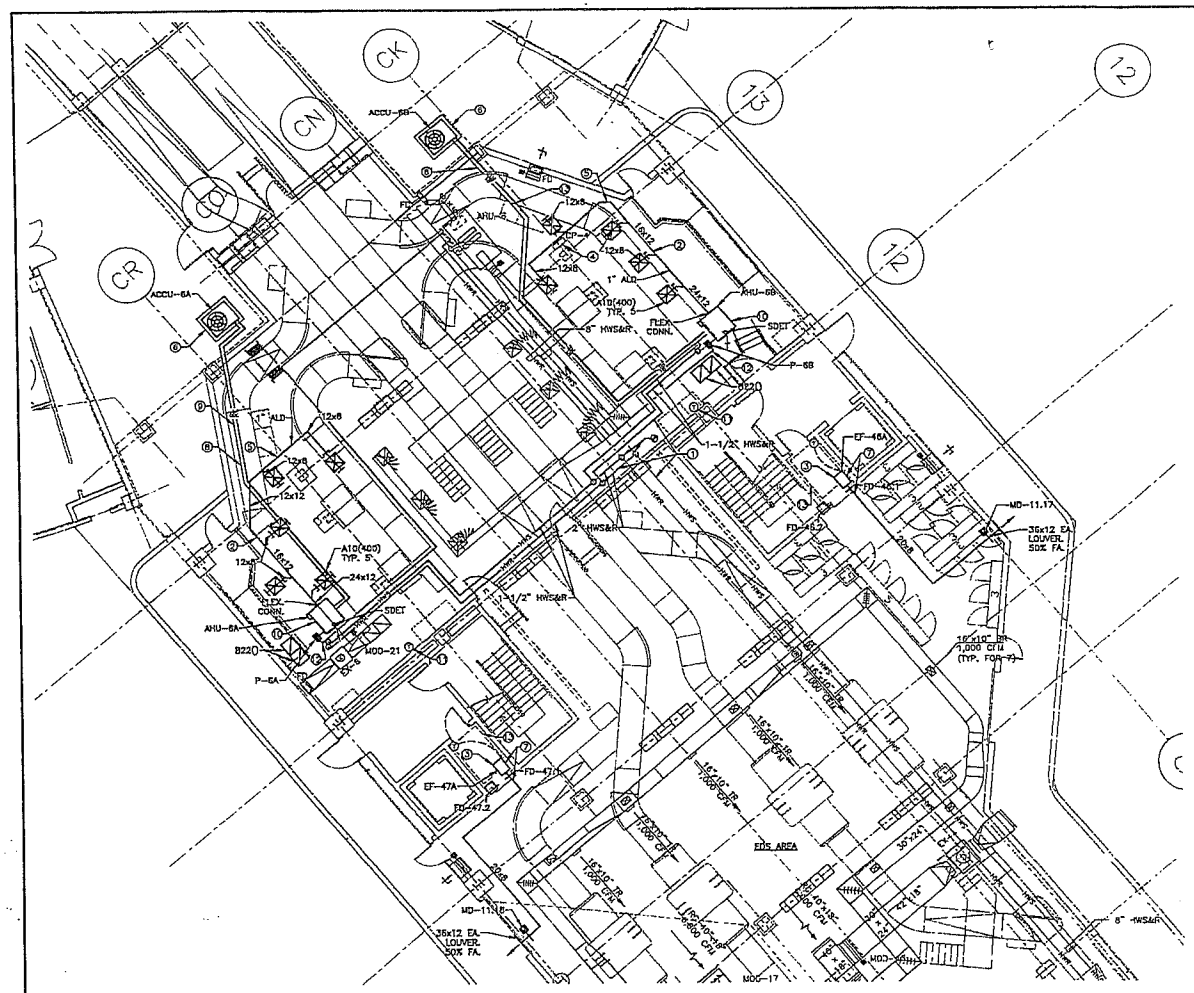

RAMP LEVEL PART PLAN
SATELLITE B3 CONNECTOR - INSTALLATION

SCALE IN FEET

KEY NOTES:

1. FURNISH AND INSTALL INSULATION ON 8" HWS&R MAIN SUPPLY LINES AND 1-1/2" AND 2" HWS&R BRANCH LINES PER SPECIFICATIONS.
2. FURNISH AND INSTALL 1-1/2" HARD BOARD INSULATION ON PORTION OF DUCTWORK INSIDE MECHANICAL ROOM.
3. FURNISH AND INSTALL EXHAUST FANS AND SUPPORTS. COORDINATE WITH ELECTRICAL DRAWINGS FOR POWER AND CONTROL WIRING.
4. FURNISH AND INSTALL ALL NECESSARY CONTROL WIRING, ACCESSORIES AND ADDITIONAL CONTROL MODULES IN CP-4 ENCLOSURE AS REQUIRED TO CONTROL AHU-6A, 6B AND ACCU-6A, 6B VIA BUILDING MANAGEMENT SYSTEM.
5. FURNISH AND INSTALL ASSOCIATED DUCTWORK, INSULATION, SUPPORTS, ETC.
6. FURNISH AND INSTALL 4" HIGH CONCRETE HOUSEKEEPING PAD UNDER HVAC EQUIPMENT.
7. FURNISH AND INSTALL EXHAUST FANS AND SUPPORTS, COORDINATE WITH ELECTRICAL DRAWINGS FOR POWER AND CONTROL WIRING. EXISTING FIRE SHUTTER DOOR FUSIBLE LINKAGE ASSEMBLY SHALL BE TEMPORARILY REMOVED FROM EXHAUST FAN AIRSTREAM FOR DUCTWORK INSTALLATION, THEN REPLACED SO THAT THE FUSIBLE LINK IS MOUNTED WITHIN THE EXHAUST DUCT AIRSTREAM VIA 2 HOLES ON BOTH SIDES OF THE DUCT AND CAN FREELY RELEASE AND TRIGGER THE FIRE SHUTTER IN CASE OF FIRE. FURNISH AND INSTALL NON-BINDING SLEEVES AT THE DUCT HOLES TO ALLOW FOR FUSIBLE LINKAGE AND CHAIN TO OPERATE FREELY IN CASE OF LINKAGE RELEASE.
8. REFRIGERANT LINES SIZED PER MANUFACTURER'S RECOMMENDATIONS. INSULATE BOTH LINES.
9. RUN REFRIGERANT PIPING ABOVE CEILING IN PLENUM WITHIN ETD AREA.
10. FURNISH AND INSTALL SECONDARY DRAIN PAN BENEATH ENTIRE AHU WITHIN CEILING PLENUM.
11. FURNISH AND INSTALL WALL MOUNTED THERMOSTAT WITH LOCKABLE BOX. COORDINATE WITH ELECTRICAL DRAWINGS FOR POWER AND CONTROL WIRING.
12. FURNISH AND INSTALL 3/4" CONDENSATE DRAIN LINE AND ASSOCIATED SUPPORTS AND CONNECT DRAIN TO EXISTING AHU-6 CONDENSATE DRAINAGE SYSTEM.
13. FURNISH AND INSTALL GALVANIZED STEEL DRAIN PAN IN EWR IN LOCATIONS BELOW ANY PIPING AND ABOVE ANY ELECTRICAL EQUIPMENT TO PREVENT PIPING ARCING FROM DRIPPING WATER

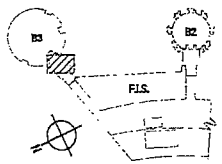

KEY PLAN (RAMP LEVEL)

Sheet 33 of 183

THE PORT AUTHORITY OF NY & NJ

R.G. VANDERWEIL ENGINEERS, LLP

VAL LEVIN
N.J. Professional Engineer # 24GI04679600

No.	Date	Revision	Approved

ENGINEERING DEPARTMENT

NEWARK LIBERTY INTERNATIONAL AIRPORT

MECHANICAL HVAC
Title

TERMINAL B
REHABILITATION OF SATELLITE B-2
MECHANICAL AND ELECTRICAL SYSTEMS

RAMP LEVEL PART PLAN
SATELLITE B3
CONNECTOR
INSTALLATION

J. DUMORNE	J. DUMORNE	S. CSONTOS
Designed by	Drawn by	Checked by

Date 05/12/2010

Contract Number EWR-154.081

Drawing Number M211

PID# 0835300

G27508

TRANE

Installation, Operation and Maintenance

Performance Climate Changer™ Air Handlers
Indoor and Outdoor Unit Sizes 3-120

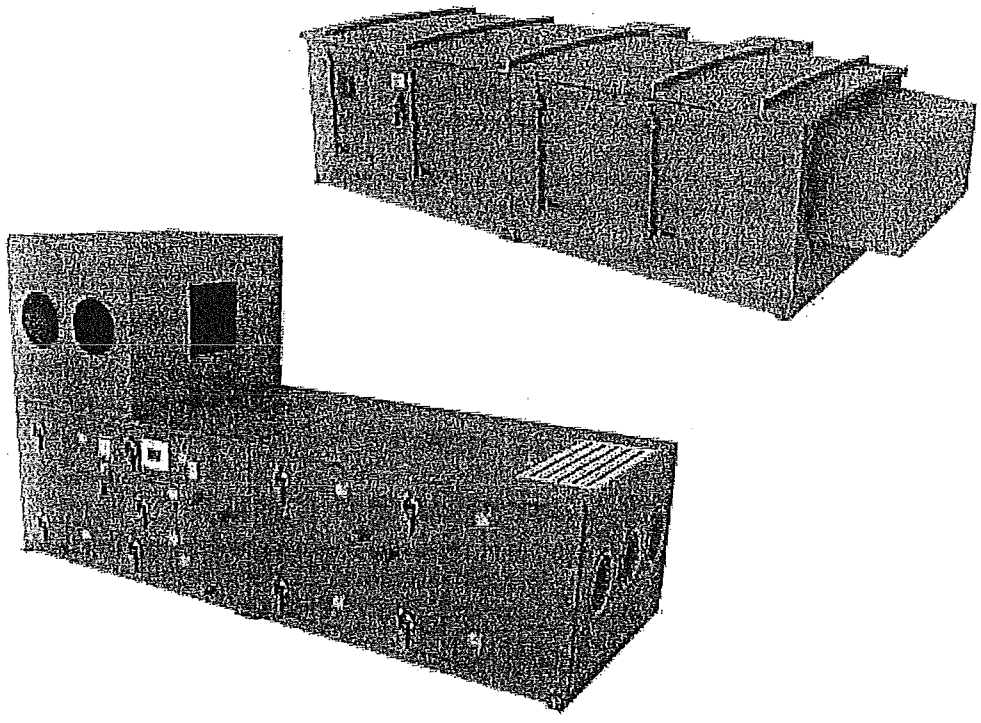

⚠SAFETY WARNING

Only qualified personnel should install and service the equipment. The installation, starting up, and servicing of heating, ventilating, and air-conditioning equipment can be hazardous and requires specific knowledge and training. Improperly installed, adjusted or altered equipment by an unqualified person could result in death or serious injury. When working on the equipment, observe all precautions in the literature and on the tags, stickers, and labels that are attached to the equipment.

X-39641152010

May 2011

CLCH-SVX07C-EN

TRANE

Warnings, Cautions and Notices

Warnings, Cautions and Notices. Note that warnings, cautions and notices appear at appropriate intervals throughout this manual. Warnings are provided to alert installing contractors to potential hazards that could result in personal injury or death. Cautions are designed to alert personnel to hazardous situations that could result in personal injury, while notices indicate a situation that could result in equipment or property-damage-only accidents.

Your personal safety and the proper operation of this machine depend upon the strict observance of these precautions.

ATTENTION: Warnings, Cautions and Notices appear at appropriate sections throughout this literature. Read these carefully.

⚠ **WARNING:** Indicates a potentially hazardous situation which, if not avoided, could result in death or serious injury.

⚠ **CAUTION:** Indicates a potentially hazardous situation which, if not avoided, could result in minor or moderate injury. It could also be used to alert against unsafe practices.

NOTICE: Indicates a situation that could result in equipment or property-damage-only accidents.

Important Environmental Concerns!

Scientific research has shown that certain man-made chemicals can affect the earth's naturally occurring stratospheric ozone layer when released to the atmosphere. In particular, several of the identified chemicals that may affect the ozone layer are refrigerants that contain Chlorine, Fluorine and Carbon (CFCs) and those containing Hydrogen, Chlorine, Fluorine and Carbon (HCFCs). Not all refrigerants containing these compounds have the same potential impact to the environment. Trane advocates the responsible handling of all refrigerants-including industry replacements for CFCs such as HCFCs and HFCs.

Responsible Refrigerant Practices!

Trane believes that responsible refrigerant practices are important to the environment, our customers, and the air conditioning industry. All technicians who handle refrigerants must be certified. The Federal Clean Air Act (Section 608) sets forth the requirements for handling, reclaiming, recovering and recycling of certain refrigerants and the equipment that is used in these service procedures. In addition, some states or municipalities may have additional requirements that must also be adhered to for responsible management of refrigerants. Know the applicable laws and follow them.

Ultraviolet (UV) Germicidal Irradiation Lights!

The United States Environmental Protection Agency (EPA) believes that molds and bacteria inside buildings have the potential to cause health problems in sensitive individuals. If specified, Trane provides ultraviolet lights (UV-C) as a factory-engineered and installed option in select commercial air handling products for the purpose of reducing microbiological growth (mold and bacteria) within the equipment. When factory provided, polymer materials that are susceptible to deterioration by the UV-C light will be substituted or shielded from direct exposure to the light. In addition, UV-C radiation can damage human tissue, namely eyes and skin. To reduce the potential for inadvertent exposure to the lights by operating and maintenance personnel, electrical interlocks that automatically disconnect power to the lights are provided at all unit entry points to equipment where lights are located.

© 2011 Trane All rights reserved

⚠WARNING
Contains Refrigerant!

System contains oil and refrigerant under high pressure. Recover refrigerant to relieve pressure before opening the system. See unit nameplate for refrigerant type. Do not use non-approved refrigerants, refrigerant substitutes, or refrigerant additives.

Failure to follow proper procedures or the use of non-approved refrigerants, refrigerant substitutes, or refrigerant additives could result in death or serious injury or equipment damage.

⚠WARNING
Hazard of Explosion!

Use only dry nitrogen with a pressure regulator for pressurizing unit. Do not use acetylene, oxygen or compressed air or mixtures containing them for pressure testing. Do not use mixtures of a hydrogen containing refrigerant and air above atmospheric pressure for pressure testing as they may become flammable and could result in an explosion. Refrigerant, when used as a trace gas should only be mixed with dry nitrogen for pressurizing units. Failure to follow these recommendations could result in death or serious injury or equipment or property-only damage.

⚠WARNING
Equipment Damage From Ultraviolet (UV) Lights!

Trane does not recommend field installation of ultraviolet lights in its air handling equipment for the intended purpose of improving indoor air quality. High intensity C-band ultraviolet light is known to severely damage polymer (plastic) materials and poses a personal safety risk to anyone exposed to the light without proper personal protective equipment (could cause damage to eyes and skin). Polymer materials commonly found in HVAC equipment that may be susceptible include insulation on electrical wiring, fan belts, thermal insulation, various fasteners and bushings. Degradation of these materials can result in serious damage to the equipment.

Trane accepts no responsibility for the performance or operation of our air handling equipment in which ultraviolet devices were installed outside of the Trane factory.

⚠WARNING
Personal Protective Equipment (PPE) Required!

Installing/servicing this unit could result in exposure to electrical, mechanical and chemical hazards.

- Before installing/servicing this unit, technicians MUST put on all Personal Protective Equipment (PPE) recommended for the work being undertaken. ALWAYS refer to appropriate MSDS and OSHA guidelines for proper PPE.
- When working with or around hazardous chemicals, ALWAYS refer to appropriate MSDS and OSHA guidelines for information on allowable personal exposure levels, proper respiratory protection and handling recommendations.
- If there is a risk of arc or flash, technicians MUST put on all Personal Protective Equipment (PPE) in accordance with NFPA70E or other country-specific requirements for arc/flash protection PRIOR to servicing the unit.

Failure to follow recommendations could result in death or serious injury.

Introduction

Overview of Manual

Use this manual to install, startup, operate, and maintain the Performance Climate Changer™ air handler. Carefully review the procedures discussed in this manual to minimize installation and startup difficulties.

Nameplate

Each Performance air handler section includes one or more nameplate/label (see Figure 1), which identifies the type of section and functional components, customer tagging information, the unit serial number, the unit order number, the build-section position for installation, and the unit model number.

Note: *The unit serial number and order number is required when ordering parts or requesting service for a Trane air handler.*

Figure 1. Performance air handler section nameplate

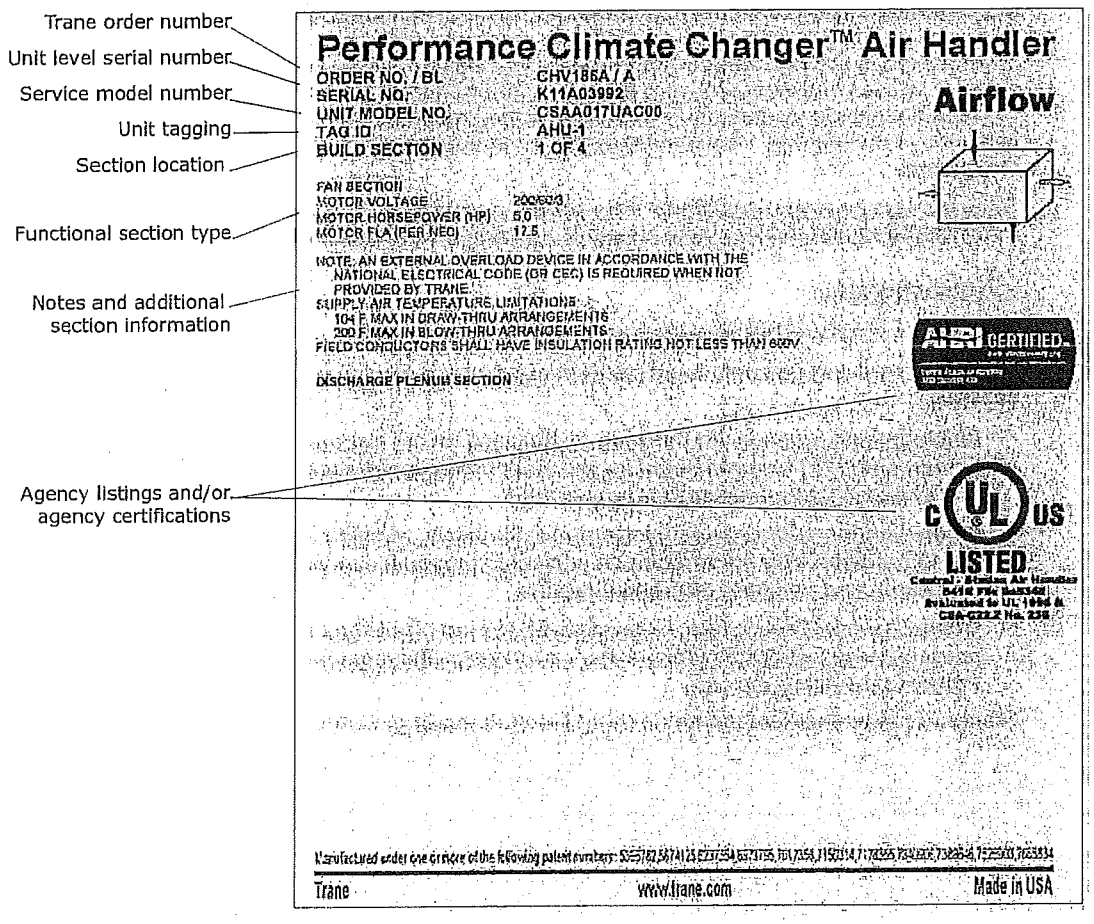

Table of Contents

Introduction 4
Overview of Manual 4
Nameplate 4
General Information 9
Operating Environment 9
Unit Description 9
Factory-Mounted Controls 9
Pre-Packaged Solutions for Controls 10
Wiring 10
Pre-Installation Requirements 11
Receiving Checklist 11
Assembly Hardware 12
Resolving Shipping Damage 12
Storage Recommendations 12
General Storage 13
Long-Term Storage 13
Outdoor Storage Considerations 13
Preparing the Unit Site 13
Roof Curb Installation Checklist 14
Unit Dimensions and Weights 16
Service Clearances 16
Fans/Motors 23
Starter/VFD Weights 23
Motor Weights 23
Installation - Mechanical 24
Lifting and Rigging 24
Remove Shipping Tie-Downs 24
General Lifting Considerations 25
Lifting Inlet and Exhaust Hoods and External Pipe Cabinet (Chase) 27
Forklifting Considerations for Indoor Units Size 3-30 28
Unit Placement and Assembly 28
Unit Placement 29
Unit Assembly 30
Ceiling Suspension for Indoor Air Handlers Sizes 3-57 30
Section-to-Section Assembly 32
Pipe Cabinet Installation 40
Outdoor Unit Weather Hood(s) 42
Indoor Dual-Path Split Dehumidification Unit (SDU)/Winterizer Assembly 43
Horizontal SDU/Winterizer Indoor Air Handler Assembly 44
Vertical SDU/Winterizer Indoor Air Handler Assembly 46

External Raceway Assembly 48
Component Installation Requirements 49
Diffuser Sections 49
Filter Sections 49
Filter Installation 50
Filter Placement 51
Fan Sections 61
Fan Isolation 61
Adjusting the Isolators 61
Seismic Isolation Requirements 62
Anchor Requirements 62
Damper Sections 64
Damper Torque Requirements 64
Opposed-Blade and Parallel-Blade Dampers 71
Duct Connections 71
Fan Discharge Connections 71
Damper Connections 72
Bottom Opening Duct Installation 73
Discharge Plenum Connections 75
Bellmouth Discharge Connections 75
Traq Damper Connections 76
External Face-and-Bypass Connections 76
Other Connections 78
Coil Piping and Connections 79
General Recommendations 79
Drain Pan Trapping 80
Steam Coil Piping 81
Water Coil Piping 83
Refrigerant Coil Piping 85
Liquid Lines 86
Suction Lines 87
Examples of Field-Installed Evaporator Piping 89
Installation - Electrical 95
Quick Connects 99
Controls Interface 100
Connecting the operator display 100
Setting up the operator display 100
Calibrating the operator display 101
Adjusting brightness and contrast 101
External communications port 101

Start-Up 102
Pre-Startup Checklist 102
General Checks 102
Fan-Related Checks 103
Coil-Related Checks 103
Motor-Related Checks 104
Unit Operation 104
Calculate Motor Voltage Imbalance 105
Tension the Fan Belt 106
Determine Fan Speed 107
Align Fan and Motor Sheaves 108
Check Multiple Belts 108
Airflow Measuring Systems 109
Traq™ Dampers 109
Fan Inlet Airflow Measuring System 114
Wiring 114
Transmitter Calibration 114
Constant Factor K 115
External Insulating Requirements 117
Troubleshooting 118
Routine Maintenance 120
Maintenance Checklist 120
Air Filters 121
Throwaway Filters 121
Permanent Filters 121
Cartridge or Bag Filters 121
Drain Pans 121
Fans 122
Inspecting and Cleaning Fans 122
Bearing Set Screw Alignment 123
Fan Bearing Lubrication 123
Motor Bearing Lubrication 124
Fan Motor Inspection 124
Coils 124
Steam and Water Coils 124
Refrigerant Coils 125
Coil Winterization 126
Type D1, D2, WL, LL, UA, UW, UU, W, P2, P4, P8, WD, 5D, and 5W Coils . 127 127
Moisture Purge Cycle 127
Cleaning Non-Porous Surfaces 128
Cleaning Porous Surfaces 128

Ultraviolet (UV) Light Maintenance 128
Cleaning the Bulbs 129
Replacing the Bulbs 129
Disposal of Bulbs 130

General Information

Operating Environment

The Performance Climate Changer™ air handler is a central station air handler for indoor applications. When considering the placement of the air handler, it is important to consider the operating environment. The acceptable ambient temperature range for unit operation is -40°F to 140°F (-40°C to 60°C).

For heating applications, a special motor may be required to withstand the higher temperatures. Motors with Class B insulation are acceptable for ambient temperatures up to 104° F, while motors with Class F insulation can withstand ambient temperatures to +140° F (60° C).

Note: *Units with UL approval have a maximum ambient temperature requirement of 104°F. The customer should provide adequate freeze protection for the coils. See "Coil Winterization" on page 126 for more information.*

Unit Description

The Performance Climate Changer air handler is designed for a variety of controlled-air applications. The basic unit consists of a fan, heating and/or cooling coils, filters, and dampers.

Trane air handlers ship as complete assemblies or in sub-assemblies if shipping splits are required. Some assembly is required when the unit ships in subassemblies.

A wide variety of components is available for Trane air handlers, including numerous fan, coil, and filter options, access sections, diffusers, discharge plenums, face-and-bypass sections, UL-approved electric heat sections, humidifiers, mixing boxes, moisture eliminator sections, exhaust dampers, controls, blenders and airflow monitoring stations.

For more information, refer to the following documents, available from your local Trane sales engineer:

- CLCH-PRC015-EN, Performance Climate Changer™ air handler catalog
- CLCH-PRC016-EN, Performance Climate Changer™ air handler quick select
- CLCH-PRG003-EN, Performance Climate Changer™ air handler guide specifications
- CLCH-SLB017-EN, Performance Climate Changer™ air handler sales brochure

Factory-Mounted Controls

Trane air handlers are available with a wide selection of factory-mounted controls, including controllers, motor starters, and variable frequency drives (VFD).

Most control components are mounted inside the unit. Depending on the system configuration, this may include damper actuators, dirty filter switches, averaging temperature sensors, and low limit switches. VFDs, starters, controllers, control transformers, static pressure transducers, DC power supplies, and customer interface relays will be in enclosures mounted on the inside of the unit.

Small items that cannot be factory-mounted, such as space temperature sensors, outside air temperature sensors, and humidity sensors, will ship inside the control enclosures, or packaged and shipped inside the fan or mixing box section. Larger items are shipped inside the fan section.

Note: *All control valves ship directly to the "ship-to address" from the vendor unless another address is given on the Trane sales order.*

All factory-mounted control systems (controls that are factory-wired to a unit controller or termination strip) ordered without starters or variable-frequency drives (VFDs) are provided with 120 to 24 Vac control transformers mounted and wired in the auxiliary control panel. The customer must provide 120 Vac control power, 50/60 Hz, typically 3 amps for unit sizes 3 to 57 and 5 amps for unit sizes 66 to 100. A dedicated 15-amp circuit is recommended.

Factory-mounted control systems ordered with factory-mounted starters or VFDs are supplied with line to 24 Vac control transformers. No additional power wiring is required.

Pre-Packaged Solutions for Controls

If the air handler has been selected using one of Trane's pre-packaged solutions options for controls, there are a number of resources available to aid in commissioning and start-up of the unit. These resources include commissioning sheets, graphics and technical application notes. The technical application notes include the control sequencing, Trane Graphic Programming (TGP) and Rover set-up files for the specific unit selected. These resources are available through your local Trane sales office.

For a more in-depth understanding of controls, refer to the following manuals:

- For programmable MP580 controllers
  - CNT-SVP01A-EN
- For hardware installation
  - CNT-SVN01A-EN
- For Trane TR200 Drives
  - BAS-SVX19A-EN

Wiring

⚠ WARNING

Proper Field Wiring and Grounding Required!

All field wiring MUST be performed by qualified personnel. Improperly installed and grounded field wiring poses FIRE and ELECTROCUTION hazards. To avoid these hazards, you MUST follow requirements for field wiring installation and grounding as described in NEC and your local/ state electrical codes. Failure to follow codes could result in death or serious injury.

Entrances are generally provided for field-installation of high and low voltage wiring through a pipe/nipple connection in the unit depending on unit configuration with or without factory-mounted controls. Before installation, consider overall unit serviceability and accessibility before mounting, running wires (power), making penetrations, or mounting any components to the cabinet.

Wiring to the air handler must be provided by the installer and must comply with all national and local codes. The fan motor nameplate includes a wiring diagram. If there are any questions concerning the wiring of the motor, write down the information on the motor nameplate and contact your local Trane sales office.

handling during shipping, in addition to other factors can cause pipe connections to become loose.

Note: *Trane will not be responsible for any leak at the field connections. Coils have been factory pressure tested before shipping.*

Assembly Hardware

Trane air handlers ship with all necessary assembly hardware and gasket material. This hardware is packaged in either a clear plastic envelope or cardboard box and can be found inside the fan, mixing box, or access section. If there is not enough space inside the section, a crate or pallet will be loaded onto the bed of the truck. Check the Parts List on the Field Assembly drawing against the contents of the crate. Do not proceed with unit assembly until verification that all materials are present. Sometimes it is necessary to use more than one section to ship hardware. Please check all sections thoroughly before contacting your local Trane sales engineer to report missing hardware.

Resolving Shipping Damage

Trane air handlers ship freight-on-board (FOB), meaning that the unit belongs to the customer the moment the delivery truck leaves the factory. If damage has occurred to the unit during shipment, follow these instructions:

Note: *Trane is not responsible for shipping damage.*

1. Make specific notation, describing the damage, on the freight bill. Take photos of the damaged material if possible.
2. Report all claims of shipping damage to the delivering carrier immediately and coordinate carrier inspection if necessary.

Note: *Do not attempt to repair the unit without consulting the delivering carrier.*

3. Notify your Trane sales representative of the damage and arrange for repair.

Note: *Do not attempt to repair the unit without consulting the Trane sales representative.*

4. Keep the damaged material in the same location as it was received.

Note: *It is the receiver's responsibility to provide reasonable evidence that concealed damage was not incurred after delivery.*

Storage Recommendations

NOTICE:
Corrosion!

All factory shipping protection should be removed. This wrapping is for transit protection only and should not be used for jobsite storage.Use only canvas tarps to cover air handlers. Plastic tarps can cause condensation to form in and on the equipment, which could result in corrosion damage or wet storage stains.

Indoor air handlers and/or field-installed accessories that must be stored for a period of time before installation *must* be protected from the elements. A controlled indoor environment is recommended for proper storage.

Outdoor air handlers require no special protection for storage before installation. Keep the equipment in the original container for protection and ease of handling.

Note: *The warranty does not cover damage to the unit or controls due to negligence during storage.*

Pre-Installation Requirements

Based on customer requirements, Trane air handlers can ship as complete units or as individual sections to be field assembled. Unit sizes 3-120 have an integral base frame designed with the necessary number of lift points for safe installation. Indoor air handlers sizes 3-30 are also shipped with a shipping skid designed for forklift transport.

Unless otherwise specified, Performance indoor air handlers ship in subassemblies if the total length of the units exceeds 98 inches or if the total weight exceeds the limits shown in Table 1. If either the maximum weight or maximum length is exceeded, the unit will ship in multiple pieces. See Table 2 for limits for outdoor air handlers.

Note: *These limits are based on a four-point lift.*

Table 1. Shipping length and weight limitations for indoor air handlers

Unit Size	Maximum Unit Weight (lb.)	Maximum Unit Length (in)
3–30	<2,500	98
35	<3,900	98
40	<4,300	98
50–57	<5,100	98
66–120	<8000	98

Table 2. Shipping length and weight limitations for outdoor air handlers

Unit Size	Minimum Length (in.)	Maximum Length (in.)	Maximum Weight (lb.)
3–30	24.50	360.00	8,000
35-57[1]	24.50	96.00	12,000
66-120[1]	24.50	96.00	12,000

Notes: [1]Exhaust damper section can be attached to the adjacent section even if this causes length to be greater than 96 inches, up to 118.44 inches.

Receiving Checklist

Upon receipt of the air handler(s), a thorough inspection should be performed to note any shipping damage that may have occurred and that the shipment is complete. All factory shipping protection should be removed immediately to allow complete access for the inspection. The shipping protection provided by the factory is for transit protection only and should not be used as a jobsite storage cover.

Note: *Delivery cannot be refused. Trane is not responsible for shipping damage.*

- Check all access doors to confirm that the latches and hinges are not damaged.
- Inspect the interior of each section for any internal damage.

Note: *Concealed damage must be reported within 15 days of receipt.*

- Inspect the coils for damage to the fin surface and/or coil connections.
- If the unit was ordered with factory-mounted controls, locate all sensors.

Note: *Items that cannot be factory-mounted should ship inside the control enclosures or should be packaged inside the fan or mixing box section.*

- Check all control devices attached to the unit exterior and confirm that they are not damaged.
- Manually rotate the fan wheel to ensure free movement of the shaft, bearings, and drive.
- Inspect the fan housing for any foreign objects.
- If the unit is shipped in subassemblies, locate the assembly hardware, which should be packaged and shipped inside the fan or mixing box section.
- Inspect and test all piping for possible shipping damage. Nipples may be installed on coils at the factory but should always be tightened and tested before any connections are made. Rough

General Storage

The unit controller and all other electrical/electronic components should be stored in conditions of -20°F to 120°F and 5 to 95 percent relative humidity, non-condensing. Electrical components *are not* moisture-tolerant. Factory protective coverings should be removed prior to storage.

Long-Term Storage

For longer periods of storage, allow proper clearance around the unit to perform periodic inspection and maintenance of the equipment.

While the unit is in storage:

- Every two weeks, rotate the fan and motor shaft 30 revolutions by hand. Check for free rotation.
- Every six months, check fan shaft bearings and grease lines. Add grease using a manual grease gun following the lubrications recommendations in "Fan Bearing Lubrication" on page 123.
- Check the motor lubrication; remove and clean grease plugs and check for the presence of moisture in the grease. If moisture is present, remove the motor and send it to an authorized repair shop for bearing inspection/replacement. If no moisture if present, refer to the motor manufacturer's lubrication recommendation for proper lubrication.

Outdoor Storage Considerations

Outdoor storage is **not** recommended for units that will be installed indoors. However, when outdoor storage is necessary, several things must be done to prevent damage:

Note: *Keep the equipment on the original wooden blocks/skid for protection and ease of handling.*

- Select a well-drained area, preferably a concrete pad or blacktop surface.
- Place the unit on a dry surface or raised off the ground to assure adequate air circulation beneath the unit and to assure no portion of the unit will contact standing water at any time.
- Loosen the belt tension on the drive belts.
- Cover the unit securely with a canvas tarp.
- Do not stack units.
- Do not pile other material on the unit.

Preparing the Unit Site

- Ensure the installation site can support the total weight of the unit (see "Unit Dimensions and Weights" on page 16 for approximate section weights; refer to the unit submittals for actual weights).
- Allow sufficient space for adequate free air and necessary service access (see "Service Clearances" on page 16). Refer to submittals for specific minimums.
- Allow room for supply and return piping, ductwork, electrical connections, and coil removal.
- Ensure there is adequate height for condensate drain requirements. See "Drain Pan Trapping" on page 80.

Note: *If unit is installed in a mechanical room on a pad, inadequate height may necessitate core-drilling the floor to attain proper trap height. Insufficient height could inhibit condensate drainage and result in flooding the unit and/or equipment room.*

NOTICE:
Microbial Growth!

The floor or foundation must be level and the condensate drain at the proper height for proper coil drainage and condensate flow. Standing water and wet surfaces inside the equipment can become an amplification site for microbial growth (mold), which may cause odors and damage to the equipment and building materials.

- Confirm the roof curb or foundation of the mounting platform is level and large enough to accommodate the unit. Refer to the unit submittals for specific dimensions.
- Provide adequate lighting for maintenance personnel to perform maintenance duties.
- Provide permanent power outlets in close proximity to the unit for installation and maintenance.
- Depending upon job requirements, the customer may need to provide 120 Vac power to the unit controller. Refer to submittals for more information. A dedicated 15-amp circuit is recommended.
- Wiring for the air handler must be provided by the installer and must comply with all national and local electrical codes.
- If the unit integral base frame ceiling suspension provisions are not used, the installer/ contractor must provide a ceiling-suspended mounting frame designed to support the length, width, and weight of the entire air-handling unit. See "Ceiling Suspension for Indoor Air Handlers Sizes 3-57" on page 30 for more information.
- Rooftop curb-mounted units must be sealed tightly to the curb. Use proper sealants and roof-to-curb sealing techniques to prevent water and air leakage. Refer to CLCH-SVN05A-EN Roof Curbs for Performance Climate Changer™ Air Handlers Installation Instructions.

Note: *Preparation of the roof curb or pier mount and roof openings should be completed prior to lifting the unit to the roof.*

Roof Curb Installation Checklist

See CLCH-SVN05A-EN Roof Curbs for Performance Climate Changer™ Air Handlers Installation Instructions for information on installing roof curbs.

It is recommended that the curb be installed directly on the support members and fastened to the supports using tack welds or other equivalent methods. Properly supported decking should be installed inside the air handler section of the curb when this method is used. See Figure 2.

Figure 2. Cross section of typical curb installation on new construction

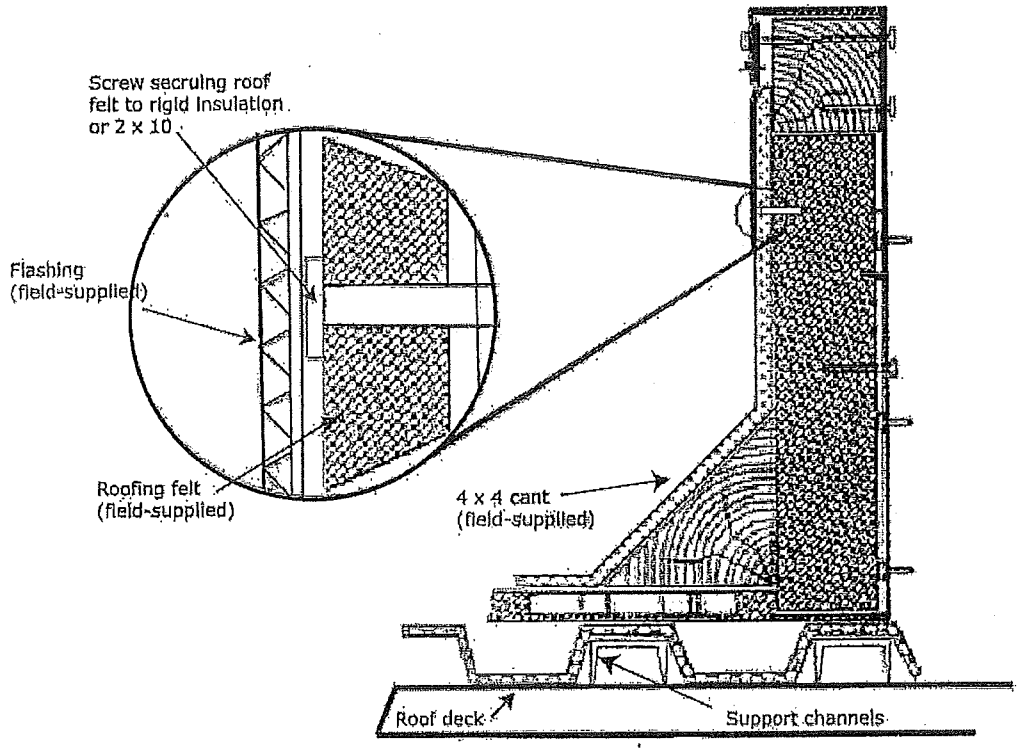

1. Verify that the roof structure can adequately support the combined weight of the unit and curb assembly.
2. Ensure that the selected installation location provides sufficient service and operational clearances.
3. Remove any twist within the curb due to roof supports and square the curb.
4. Level the curb.
5. Secure the curb to the roof support members.
6. Install 2-inch thick boards or rigid insulation around the curb.
7. Install cant strips around the curb.
8. Bring field supplied roofing felt up to the top of the curb nailing strips. Nail felt into place.
9. Install field supplied flashing under the lip of the curb flanges and over the felt.

Apply sealant to the four corners. Caulk all joints between the curb and the roof. Attach the gasket material to the curb's top flanges (entire perimeter) and to the supply and return air duct opening panel flanges.

Table 4. Section dimensions (inches) and weights (pounds) - unit sizes 3-30

Unit size	3	4	6	8	10	12	14	17	21	25	30
Coil											
-Small horizontal (with 4-row UW)	10.00	10.00	10.00	10.00	10.00	10.00	10.00	10.00	10.00	10.00	10.00
	127.31	164.68	191.68	226.20	269.31	310.76	335.50	384.32	467.78	533.75	609.14
-Medium horizontal (with 8-row UW)	14.00	14.00	14.00	14.00	14.00	14.00	14.00	14.00	14.00	14.00	14.00
	179.86	236.36	282.91	339.38	407.35	475.70	516.37	601.64	734.68	848.92	978.12
-Extended-medium horizontal (with 8-row UW)	19.00	19.00	19.00	19.00	19.00	19.00	19.00	19.00	19.00	19.00	19.00
	196.79	255.65	303.39	361.57	431.62	501.63	544.40	631.09	772.37	889.31	1021.94
-Medium-large horizontal (with 10-row W)	24.50	24.50	24.50	26.50	26.50	26.50	26.50	26.50	26.50	26.50	26.50
	281.83	375.92	450.41	575.29	681.45	802.89	912.98	1045.42	1296.51	1509.94	1738.41
-Large horizontal or vertical (with 10-row W)	34.00	34.00	34.00	36.00	36.00	36.00	36.00	36.00	34.00	46.00	46.00
	313.98	412.58	489.32	617.44	727.56	852.16	966.23	1113.15	1368.11	1683.65	1926.83
Fan[6]											
-Belt-drive plenum fan with motor	36.00	41.00	41.00	44.00	42.50	42.50	42.50	44.00	50.25	56.50	56.50
	406.54	537.13	625.09	674.57	864.70	936.46	1052.78	1214.74	1414.95	1495.75	1736.99
-Housed fan (FC/AF/BC) with motor	36.00	41.00	41.00	44.00	42.50	42.50	42.50	44.00	50.25	56.50	56.50
	387.54	466.14	568.41	641.41	839.41	904.62	925.53	1073.07	1403.49	1535.79	1755.04
-Direct-drive plenum fan with motor	36.00	41.00	41.00	44.00	46.75	48.50	48.50	50.00	50.25	50.25	52.50
	335.20	450.11	446.52	576.33	663.63	746.10	767.31	799.69	1095.84	1182.66	1263.84
Controls section (includes largest available VFD)	24.50	24.50	24.50	24.50	24.50	24.50	24.50	24.50	24.50	24.50	24.50
	234.30	247.41	276.71	299.47	318.94	332.69	414.48	423.00	442.03	463.11	486.63
Diffuser	10.00	10.00	10.00	14.00	14.00	14.00	14.00	14.00	14.00	19.00	19.00
	53.76	63.14	68.53	90.94	100.86	116.94	121.90	129.34	143.02	185.04	199.78
Discharge plenum[7]											
-Horizontal	34.00	34.00	34.00	36.00	36.00	36.00	36.00	36.00	34.00	46.00	46.00
	150.01	185.36	196.57	230.30	251.17	270.87	284.72	307.99	376.33	367.37	404.25
-Vertical	36.00	41.00	41.00	44.00	42.50	42.50	42.50	44.00	50.25	56.50	56.50
	177.24	209.05	221.00	259.71	285.68	308.68	325.46	351.14	429.14	497.02	549.91
Blender	19.00	24.50	24.50	26.50	36.00	36.00	36.00	36.00	34.00	46.00	46.00
	94.86	132.71	146.30	173.34	238.64	264.12	276.73	303.71	323.59	427.13	470.25
Electric Heat	36.00	41.00	41.00	44.00	42.50	42.50	42.50	44.00	50.25	56.50	56.50
	261.39	309.88	335.38	449.00	471.92	500.13	513.26	627.76	705.10	857.44	898.23
Face-and-Bypass Dampers											
-Internal face-and-bypass or face damper only	19.00	19.00	19.00	19.00	19.00	19.00	19.00	19.00	19.00	19.00	19.00
	122.68	155.15	167.79	190.70	219.68	241.45	255.80	270.77	300.08	317.53	353.22
-External face-and-bypass	19.00	19.00	19.00	19.00	19.00	19.00	19.00	19.00	19.00	19.00	19.00
	105.60	129.06	141.70	157.63	178.68	199.15	209.53	224.50	248.05	265.62	291.36
Energy Wheel	n/a	52.25	52.25	52.25	54.50	57.50	57.50	57.50	55.50	55.50	57.50
	n/a	364.17	378.70	457.21	561.31	676.15	766.30	786.59	879.93	917.84	1135.01
CDQ Wheel	52.25	52.25	52.25	52.25	54.50	57.50	57.50	57.50	55.50	55.50	57.50
	284.39	406.17	420.70	484.21	661.31	756.15	884.30	905.99	1189.41	1213.44	1310.61
Integral-face-and-bypass coil											
-Less than 4 rows	n/a	26.50	26.50	26.50	26.50	26.50	26.50	26.50	26.50	26.50	26.50
	n/a	355.20	367.21	470.21	541.93	585.86	619.66	733.14	792.88	805.52	940.46
-4 rows	n/a	43.00	43.00	43.00	43.00	43.00	43.00	43.00	43.00	43.00	43.00
	n/a	543.54	559.47	723.32	834.36	900.62	950.23	1130.33	1220.11	1403.29	1443.62

Table 4. Section dimensions (inches) and weights (pounds) - unit sizes 3-30

Unit size	3	4	6	8	10	12	14	17	21	25	30
Humidifier											
-Direct Steam	14.00	14.00	14.00	14.00	14.00	14.00	14.00	14.00	14.00	14.00	14.00
	125.26	145.84	165.02	183.76	225.95	268.70	285.76	323.51	354.22	397.93	452.06
-Atmospheric	14.00	14.00	14.00	14.00	14.00	14.00	14.00	14.00	14.00	14.00	19.00
	126.77	167.88	177.85	203.32	252.08	276.18	311.72	338.64	396.01	432.20	527.53
Silencer											
-3 ft	38.00	38.00	38.00	38.00	38.00	38.00	38.00	38.00	38.00	38.00	38.00
	198.00	255.81	285.56	319.00	358.76	442.35	461.27	511.98	573.44	699.10	799.58
-5 ft	62.00	62.00	62.00	62.00	62.00	62.00	62.00	62.00	62.00	62.00	62.00
	308.14	391.33	435.77	483.40	541.16	677.72	703.65	780.18	873.34	1072.96	1214.72
2-deck or 3-deck Multizone											
- Horizontal discharge	n/a	n/a	52.00	52.00	52.00	57.00	57.00	57.00	72.00	72.00	72.00
	n/a	n/a	521.86	581.76	672.98	751.82	795.28	829.01	1074.90	1130.69	1260.57
- Vertical discharge	n/a	n/a	61.00	61.00	66.00	71.00	71.00	71.00	82.00	82.00	82.00
	n/a	n/a	615.93	676.27	832.69	922.38	966.31	1005.77	1228.90	1292.74	1418.36
UV light	14.00	14.00	14.00	14.00	14.00	14.00	14.00	14.00	14.00	14.00	14.00
	76.02	93.64	98.69	120.26	135.22	146.68	155.07	162.95	179.84	188.71	218.33
Gas heat (highest MBH)	n/a	n/a	69.00	69.00	67.00	65.00	64.00	73.00	76.00	76.00	75.00
			884.80	934.90	1042.60	1070.00	1089.00	1420.50	1294.80	1394.50	1477.70
Horizontal end cap	10.0	10.0	10.0	10.0	10.0	10.0	10.0	10.0	10.0	10.0	10.0
	59.5	68.8	72.7	80.8	91.9	99.5	105.1	110.3	121.3	127.6	142.1
Diagonal economizer for outdoor unit	45.50	49.00	49.50	48.00	53.00	53.00	56.50	52.00	62.50	57.00	62.50
	203.89	247.13	270.83	289.91	348.65	378.29	425.94	431.12	554.51	565.16	689.49
Exhaust damper section for outdoor unit	19.00	19.00	19.00	19.00	19.00	19.00	19.00	19.00	19.00	19.00	19.00
	91.70	103.30	109.30	121.00	136.07	147.60	155.50	163.30	178.90	188.10	208.20
Hoods											
- Side inlet hood (add to width) for diagonal economizer	16.63	17.88	17.38	22.25	17.38	19.38	19.38	21.38	22.63	25.63	27.75
	22.11	44.51	46.71	72.36	51.90	69.11	74.11	87.31	105.51	128.29	165.87
- Side inlet hood (add to width) for mixing box	15.38	15.38	17.50	19.75	19.75	23.00	21.13	24.75	27.75	32.13	35.25
	17.38	17.38	22.37	28.48	31.07	41.83	50.11	51.75	69.06	83.64	95.67
- Back inlet hood (add to length) for mixing box	16.63	17.88	17.38	22.25	17.38	19.38	19.38	21.38	22.63	25.63	27.75
	22.11	44.51	46.71	72.36	51.90	69.11	74.11	87.31	105.51	128.29	165.87
- Exhaust hood (add to length or width)	15.38	15.38	17.50	19.75	19.75	23.00	21.13	24.75	27.75	32.13	35.25
	12.36	12.36	15.95	20.47	21.26	29.08	29.65	34.70	45.03	58.67	67.02
Pipe cabinet weight											
15 inches long, 36 inches deep	104.00	104.00	116.00	120.00	120.00	127.00	127.00	141.00	148.00	164.00	164.00
24 inches long, 36 inches deep	122.00	122.00	135.00	140.00	140.00	147.00	147.00	162.00	170.00	187.00	187.00
48 inches long, 36 inches deep	169.00	169.00	184.00	191.00	191.00	200.00	200.00	218.00	228.00	249.00	249.00
96 inches long, 36 inches deep	263.00	263.00	284.00	293.00	293.00	305.00	305.00	331.00	343.00	373.00	373.00

Unit Dimensions and Weights

Notes: *Add 0.19 inches to total unit length for each shipping split to account for gasketing.*

Table 5. Section dimensions (inches) and weights (pounds) - unit sizes 35-120

Nominal airflow[1]	17,500	20,000	25,000	28,500	33,000	40,000	50,000	60,000
Airflow at 625 fpm[2]	23,263	25,519	34,375	39,581	47,225	53,475	65,106	76,388
Unit size	**35**	**40**	**50**	**57**	**66**	**80**	**100**	**120**
Height - indoor unit (in.)[3]	67.25	67.25	75.75	85.50	92.50	107.50	119.75	119.75
Height - outdoor unit (in.)[4] Includes base drip lip	76.075	76.075	85.45	95.20	102.20	117.20	129.45	129.45
Width (in.)	100.00	112.50	125.50	125.50	140.50	140.50	154.50	182.00
Weight add for outdoor unit (lbs/in. of unit length)	3.02	3.28	3.74	6.13	2.88	2.88	3.11	3.55
Mixing box								
-with or without angled filters	48.00	48.00	48.00	48.00	49.00	54.00	60.00	60.00
	784.64	877.19	980.34	1055.78	1344.75	1501.00	1772.41	2016.97
-with top Traq dampers	48.00	48.00	48.00	48.00	84.00	92.00	96.00	96.00
	917.88	1019.49	1188.45	1271.47	1812.46	2030.42	2313.89	2604.03
-with reduced length for airfoil dampers only	35.50	38.50	41.50	41.50	41.50	41.50	47.00	53.00
	635.84	716.69	845.71	845.71	1183.44	1272.94	1508.57	1773.61
Filters								
-2-in. or 4-in. angled	24.50	24.50	27.50	27.50	27.50	27.50	27.50	27.50
	533.86	580.66	676.42	704.29	882.20	945.62	1032.36	1136.60
-Cartridge (12-in.) or short bag (18-in.)	24.50	24.50	27.50	27.50	27.50	27.50	27.50	27.50
	428.04	438.45	549.07	566.64	775.99	807.31	927.71	1031.64
-2-in. or 4-in. flat	14.00	14.00	14.00	14.00	15.00	15.00	15.00	15.00
	294.60	319.13	353.93	379.91	533.87	560.15	623.46	699.50
-2-in. and 4-in. combination flat	19.00	19.00	19.00	19.00	19.00	19.00	19.00	19.00
	397.10	430.77	482.70	540.44	700.68	779.12	862.09	908.32
-Long bag (30-in.)	37.25	37.25	37.25	37.25	37.25	37.25	37.25	37.25
	525.02	570.65	637.71	692.97	894.76	971.09	1061.74	1125.66
-Front-load 2-in or 4-in.flat, cartridge or HEPA	40.00	40.00	40.00	40.00	40.00	40.00	40.00	40.00
	636.18	676.08	763.56	806.39	1031.28	1121.46	1250.59	1368.55
-Front-load Short Bag	45.00	45.00	45.00	45.00	45.00	45.00	45.00	45.00
	684.89	727.15	821.08	867.34	1106.39	1201.85	1337.95	1461.13
Access or blank[5]								
-Small horizontal	10.00	10.00	10.00	10.00	n/a	n/a	n/a	n/a
	211.11	227.92	254.69	265.35	n/a	n/a	n/a	n/a
-Medium horizontal	14.00	14.00	14.00	14.00	15.00	15.00	15.00	15.00
	241.53	260.24	290.28	302.41	430.36	449.60	493.59	549.13
-Extended-medium horizontal	19.00	19.00	19.00	19.00	19.00	19.00	19.00	19.00
	279.57	300.64	334.76	348.74	476.36	497.88	545.85	605.56
-Medium-large horizontal	24.50	24.50	24.50	24.50	24.50	24.50	24.50	24.50
	267.55	289.53	324.20	337.75	475.62	497.08	547.88	613.24
-Large horizontal or turning	48.00	48.00	48.00	48.00	49.00	54.00	60.00	60.00
	452.37	487.88	544.19	566.43	771.76	870.43	1036.54	1146.85
-Extra-large horizontal or turning	63.75	63.75	68.50	n/a	n/a	n/a	n/a	n/a
	367.83	397.14	443.56	n/a	n/a	n/a	n/a	n/a

Note: [1]Nominal airflow is based on 500 fpm through a nominal coil (i.e. 500xunit size 8=4000 cfm). [2]Airflow@625 fpm through the flat filter (maximum filter velocity). [3]Height includes standard 2.5-inch base frame for sizes 3-57 and 6-inch base frame for sizes 66-120. [4]Height includes 6-inch base frame for sizes 3-120.[5]Variable lengths available from 14-96 inches. [6]Fan section weights include the heaviest fan with the largest ODP motor available. [7]Nominal length and height shown for discharge plenums. Variable plenum height and length is available from 0.5 to 1.5 of nominal.

Table 5. Section dimensions (inches) and weights (pounds) - unit sizes 35-120

Unit size	35	40	50	57	66	80	100	120
Coils								
-Small horizontal (with 4-row UW)	10.00	10.00	10.00	10.00	n/a	n/a	n/a	n/a
	679.61	743.10	915.56	1023.99	n/a	n/a	n/a	n/a
-Medium horizontal (with 8-row UW)	14.00	14.00	14.00	14.00	15.00	15.00	15.00	15.00
	1083.29	1208.28	1543.21	1739.24	2183.23	2518.10	3045.45	3584.41
-Extended-medium horizontal (with 8-row UW)	19.00	19.00	19.00	19.00	19.00	19.00	19.00	19.00
	1137.72	1267.13	1595.08	1793.51	2237.43	2574.51	3116.83	3660.64
-Medium-large horizontal (with 10-row W)	24.50	24.50	24.50	24.50	24.50	24.50	24.50	24.50
	1944.10	2204.75	2736.01	3195.47	3838.02	4447.61	5453.04	6662.13
-Large horizontal or vertical (with 10-row W)	48.00	48.00	48.00	48.00	n/a	n/a	n/a	n/a
	2140.10	2411.83	2991.25	3459.40	n/a	n/a	n/a	n/a
Fan[6]								
-Belt-drive plenum fan with motor	53.50	53.50	57.50	59.50	61.00	63.00	73.75	82.25
	2311.19	2676.28	3178.70	3496.17	3940.63	4590.36	6035.46	7133.78
-Housed fan (FC/AF/BC) with motor	63.75	63.75	68.50	68.50	84.00	92.00	96.00	96.00
	2381.09	2641.30	3148.10	3211.05	4216.56	4980.29	5866.21	6705.45
-Direct-drive plenum fan with motor	55.50	60.00	65.00	65.00	54.75	54.75	54.75	54.75
	1648.42	1910.99	2793.74	2851.21	3433.31	3950.32	5356.05	5525.47
Controls section (includes largest available VFD)	24.50	24.50	24.50	24.50	24.50	24.50	24.50	24.50
	574.55	596.53	631.20	644.75	782.62	804.08	854.88	920.24
Diffuser	24.50	24.50	24.50	24.50	27.50	37.25	37.25	37.25
	365.56	389.25	428.01	445.57	664.01	809.34	876.54	955.28
Discharge plenum[7]								
-Horizontal	48.00	48.00	48.00	48.00	49.00	54.00	60.00	60.00
	474.26	511.01	570.20	594.26	773.17	810.80	891.34	989.20
-Vertical	63.75	63.75	68.50	n/a	n/a	n/a	n/a	n/a
	779.25	840.96	989.88	n/a	n/a	n/a	n/a	n/a
Blender	48.00	48.00	48.00	48.00	49.00	54.00	60.00	60.00
	540.76	593.46	675.51	731.75	970.30	1112.23	1345.03	1567.62
Electric Heat	n/a	n/a	n/a	n/a	n/a	n/a	n/a	n/a
	n/a	n/a	n/a	n/a	n/a	n/a	n/a	n/a
Face-and-Bypass Dampers								
-Internal face-and-bypass or face damper only	19.00	19.00	19.00	19.00	19.00	19.00	19.00	19.00
	543.64	636.11	713.60	803.86	1026.07	1107.46	1236.82	1361.55
-External face-and-bypass	22.00	22.00	22.00	22.00	39.00	39.00	39.00	39.00
	473.39	556.23	630.10	714.61	888.33	973.60	1093.88	1205.53
Energy Wheel	61.25	64.75	64.75	n/a	n/a	n/a	n/a	n/a
	1497.92	1733.76	1995.01	n/a	n/a	n/a	n/a	n/a
CDQ Wheel	56.25	56.25	58.75	n/a	n/a	n/a	n/a	n/a
	2127.92	2323.76	3275.01	n/a	n/a	n/a	n/a	n/a
Integral-face-and-bypass coil								
-Less than 4 rows	29.50	29.50	29.50	29.50	29.50	29.50	29.50	29.50
	1129.66	1168.40	1793.80	1956.80	2322.61	2378.60	2865.77	2936.42
-4 rows	43.00	43.00	n/a	n/a	n/a	n/a	n/a	n/a
	1681.45	1726.58	n/a	n/a	n/a	n/a	n/a	n/a

Table 5. Section dimensions (inches) and weights (pounds) - unit sizes 35-120

Unit size	35	40	50	57	66	80	100	120
Humidifier								
-Direct steam	14.00	14.00	14.00	14.00	15.00	15.00	15.00	15.00
	544.40	599.28	781.71	897.00	1123.05	1215.33	1362.86	1551.07
-Atmospheric	19.00	19.00	19.00	19.00	19.00	19.00	19.00	19.00
	581.42	664.92	723.70	802.82	977.24	1078.41	1264.58	1491.95
Silencer								
-3 ft	38.00	38.00	38.00	38.00	38.00	38.00	38.00	38.00
	918.37	973.72	1225.82	1331.88	1572.80	1741.00	2195.72	2554.94
-5 ft	62.00	62.00	62.00	62.00	62.00	62.00	62.00	62.00
	1334.66	1439.39	1795.06	1944.98	2312.54	2555.39	3230.00	3786.24
2-Deck or 3-Deck Multizone								
- Horizontal discharge	78.00	78.00	78.00	n/a	n/a	n/a	n/a	n/a
	1638.97	1760.51	2002.92	n/a	n/a	n/a	n/a	n/a
- Vertical discharge	92.00	92.00	96.00	n/a	n/a	n/a	n/a	n/a
	1881.25	2021.32	2466.01	n/a	n/a	n/a	n/a	n/a
UV light	14.00	14.00	14.00	14.00	15.00	15.00	15.00	15.00
	325.48	352.71	394.34	419.43	574.52	604.11	667.60	758.72
Gas heat (highest MBH)	94.00	91.00	100.00	100.00	101.00	101.00	102.00	102.00
	2469.40	2560.00	3575.20	3285.90	3700.50	3190.80	4470.00	4426.60
Horizontal end cap	10.00	10.00	10.00	10.00	10.00	10.00	10.00	10.00
	246.10	267.20	301.30	315.20	429.90	452.10	502.40	565.70
Diagonal economizer for outdoor unit	75.00	83.00	72.00	75.50	83.00	86.00	93.00	93.00
	973.26	1100.52	1168.76	1266.21	1722.26	1919.94	2289.68	2494.18
Exhaust damper section for outdoor unit	22.40	22.40	22.40	22.40	22.40	22.40	22.40	22.40
	351.40	379.60	425.10	443.70	587.70	616.90	681.10	760.20
Hoods								
- Side inlet hood (add to width) for diagonal economizer	27.75	27.75	29.50	33.00	42.63	45.13	47.00	47.00
	175.86	195.13	229.85	269.82	316.87	343.85	490.93	566.15
- Side inlet hood (add to width) for mixing box	34.00	35.00	38.75	43.38	48.63	57.13	60.50	63.00
	122.04	128.02	160.97	174.27	189.35	257.94	297.76	330.05
- Back inlet hood (add to length) for mixing box	27.75	27.75	29.50	33.00	42.63	45.13	47.00	47.00
	175.86	195.13	229.85	269.82	316.87	343.85	490.93	566.15
- Exhaust hood (add to length or width)	34.00	35.00	38.75	43.38	48.63	57.13	60.50	63.00
	72.80	76.89	92.81	113.92	128.56	174.08	206.04	221.35
Pipe cabinet weight								
15 inches long, 36 inches deep	175.00	175.00	191.00	209.00	215.00	243.00	265.00	265.00
24 inches long, 36 inches deep	199.00	199.00	216.00	236.00	243.00	273.00	298.00	298.00
48 inches long, 36 inches deep	263.00	263.00	284.00	309.00	317.00	354.00	385.00	385.00
96 inches long, 36 inches deep	392.00	392.00	421.00	454.00	466.00	517.00	558.00	558.00

Fans/Motors

Starter/VFD Weights

Fan weights do not include starter/VFD weights. The table below gives approximate starter/VFD weights.

Table 6. Approximate starter and VFD weights per horsepower (lbs.)

Horsepower	1	1.5	2	3	5	7.5	10	15	20	25	30	40	50	60	75	100	125
Starter[1]	65	65	65	65	65	65	65	65	65	97	97	97	97	97	97	97	97
VFD[2]	123	123	132	124	125	136	151	162	177	197	241	325	332	243	258	294	314

Note: [1]These weights represent the largest available starter. [2]VFD weights include transformer, distribution block, and enclosure.

Motor Weights

Fan weights provided in this manual include the heaviest ODP (open drip-proof) motor.

Table 7. Approximate motor weights (pounds)

Motor Type	Motor RPM	Horsepower 3/4	1	1-1/2	2	3	5	7-1/2	10	15	20	25	30	40	50	60	75	100	125
Energy efficient ODP (EEOP)	1800	24	29																
NEMA Premium ODP (HEOP)	1200/		39	77	91	147	126	249	300	375	443	594	667						
NEMA Premium TEFC (HETC)	6 pole		56	96	109	148	185	310	341	423	481	614	655						
NEMA Premium ODP (HEOP)	1800/		36	42	47	76	82	118	148	234	263	330	379	488	521	698	808	1114	1238
NEMA Premium TEFC (HETC)	4 pole		47	54	56	91	108	159	185	285	315	452	481	578	670	808	889	1239	1466
NEMA Premium ODP (HEOP)	3600/		36	36	37	89	104	173	203	267	243	261	407						
NEMA Premium TEFC (HETC)	2 pole		36	53	62	85	103	154	176	287	322	448	496						

Installation - Mechanical

Lifting and Rigging

Remove Shipping Tie-Downs

Figure 4. Isolator tie-down removal for unit sizes 35-120

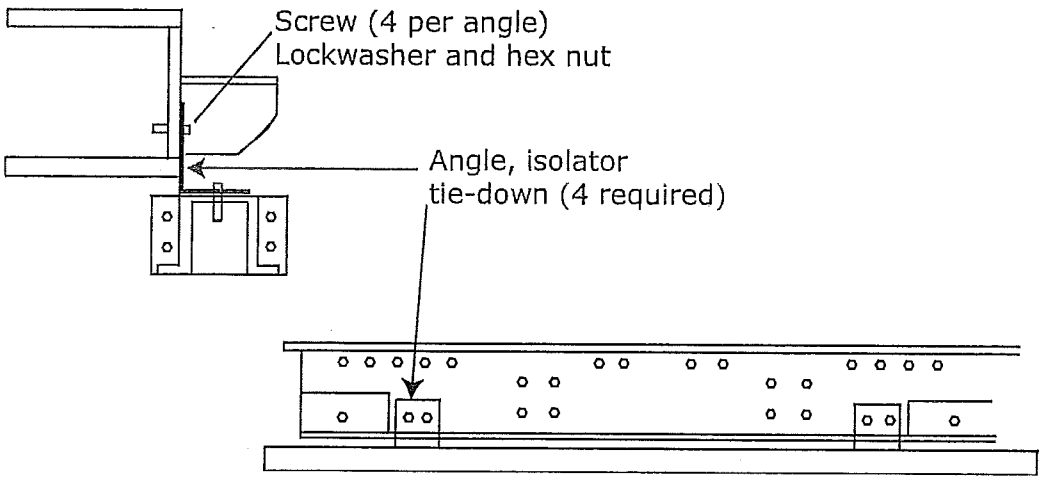

Prior to unit placement, remove the shipping tie-downs per the following instructions:

- Shipping tie-downs are located at each corner of the isolation base. See Figure 51, Figure 52, Figure 53 and Figure 54.
- Access for removal of shipping tie-downs for unit sizes 3-30 is available through the fan section access door or opposite drive-side plug panel. See Figure 5.
- Remove the bolt. This will release the isolator and make it possible to remove the pipe or spacer.
- Replace plug panel if applicable.

Note: *For outdoor air handlers, after isolator tie-down is removed, remove the paper backing from the butyl tape around plug panel perimeter prior to replacing plug panel.*

Figure 5. Plug panel plate

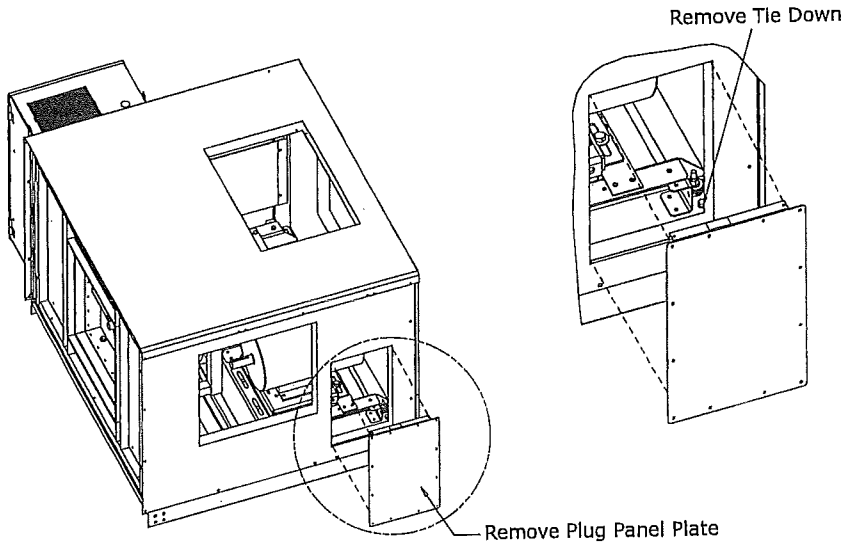

General Lifting Considerations

⚠ WARNING

Heavy Objects!

Always place, assemble, and suspend sections/subassemblies one at a time. Do not lift units in windy conditions. Do not raise units overhead with personnel below unit. Failure to follow these instructions could result in death, serious injury, or equipment damage.

⚠ WARNING

Improper Unit Lift!

Test lift unit approximately 24 inches to verify proper center of gravity lift point. To avoid dropping of unit, reposition lifting point if unit is not level. Failure to properly lift unit could result in death or serious injury or possible equipment or property-only damage.

NOTICE:

Equipment Damage!

Keep skid in place until unit is ready to set. Do not move unit or subassembly without the skid in place as shipped from the factory. Premature skid removal could result in equipment damage.

Before preparing the unit for lifting, estimate the approximate center of gravity for lifting safety. Because of placement of internal components, the unit weight may be unevenly distributed, with more weight in the coil and fan areas. Approximate unit weights are provided in "Unit Dimensions and Weights" on page 16. Refer to the unit submittals for actual section weights. Test the unit for proper balance before lifting.

For outdoor air handlers, preparation of the roof curb or pier mount and roof openings must be completed before lifting to the roof. See CLCH-SVN04A-EN Roof Curbs for Performance Climate Changer Air Handlers installation instructions for details.

⚠ WARNING
Heavy Objects!

Do not use cables (chains or slings) except as shown. Each of the cables (chains or slings) used to lift the unit must be capable of supporting the entire weight of the unit. Lifting cables (chains or slings) may not be of the same length. Adjust as necessary for even unit lift. Other lifting arrangements may cause equipment or property-only damage. Failure to properly lift unit could result in death or serious injury.

Always rig subassemblies or sections as they ship from the factory. Never bolt sections together before rigging.

- Make the loop of the sling parallel to the direction of airflow, if possible.
- When hoisting the unit into position, use the proper rigging method, such as straps, slings, spreader bars, or lifting lugs for protection and safety. **Use all lifting lugs provided.**
- For unit sizes 3 to 120 with integral base frame, use field-provided spreader bars and slings to rig units and subassemblies as shown in Figure 6. The air handler is not designed to be lifted or rigged from the top of the unit.

Figure 6. Lifting detail for unit sizes 3 to 120

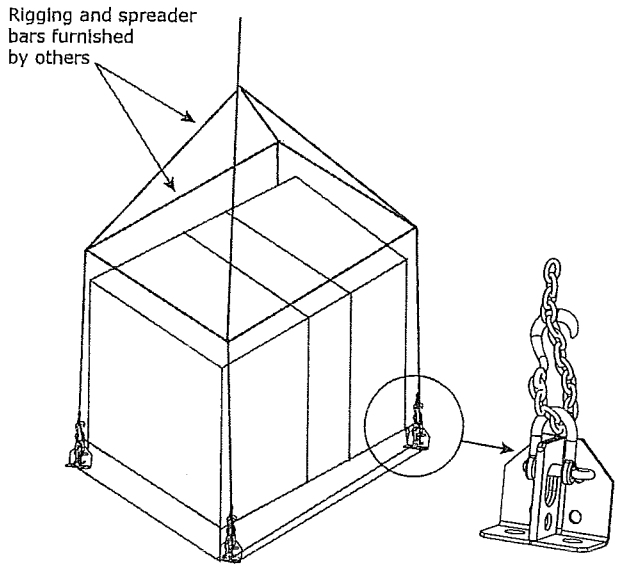

Figure 7. Lug holes

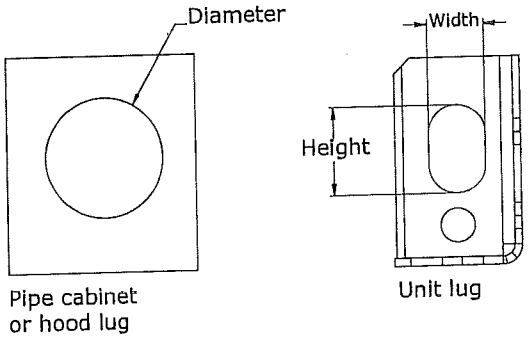

Table 8. Lug hole sizes

Section	Location	Unit Size	Width	Height
Unit Lug Hole Size	Indoor	3-30	0.88	1.38
	Indoor	35-57	1.38	1.25
	Indoor	66-120	1.25	2.75
	Outdoor	3-30	1.25	2.75
Pipe Cabinet	Outdoor	3-120	2.5-in. diameter	
Hood	Outdoor	3-120	1-in. diameter	

- \For outdoor air handlers, never stack the pipe cabinet or inlet hood on the unit as it is being lifted.
- Do not attach the intake/exhaust hood or pipe cabinet to the unit prior to lifting the unit. Doing so may damage the equipment. Attach the hoods to the unit only after all sections are in place.
- For outdoor air handlers, all shipping supports and crating on the face of the sections must be removed to permit proper fit-up and sealing of the surfaces. Dispose of properly.

Lifting Inlet and Exhaust Hoods and External Pipe Cabinet (Chase)

⚠ WARNING
Heavy Objects!

Always place, assemble, and suspend modules/subassemblies one at a time. Placing, assembling, and/or suspending more than one module/subassembly at a time could result in death, serious injury, or equipment damage.

See Figure 7 and Table 8 for lug hole sizes.

Figure 8. Inlet and exhaust hood lifting

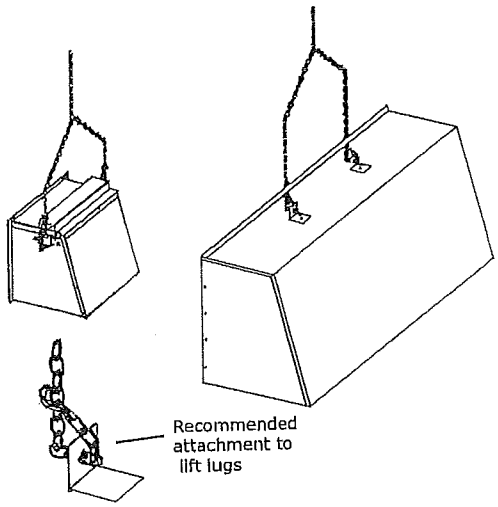

Figure 9. Pipe cabinet lifting

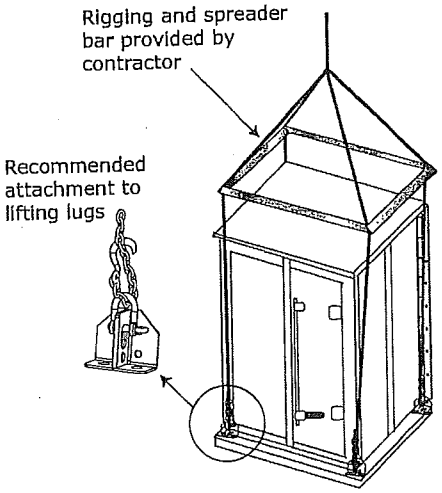

Forklifting Considerations for Indoor Units Size 3-30

NOTICE:

Equipment Damage!

Improper use of fork lifts could result in equipment damage. Fork lifting from any location other than that recommended by Trane and indicated on the unit labels could result in unit damage. Trane is not responsible for equipment damage resulting from improper forklifting practices.

Note: *Do not use a forklift on outdoor air handlers or indoor air handlers/subassemblies larger than size 30.*

For unit sizes 3-30, a forklift may be used to lift a single section or small subassembly, provided the forks extend under both ends of the base frame, or as indicated in Figure 10. The forks should not contact the bottom of the air handler. Units should only be lifted from the proper end identified by the lifting label on the unit.

A lifting crane or other means should be used for larger units where forks cannot extend under both base rails.

Figure 10. Fork lift points with base rail

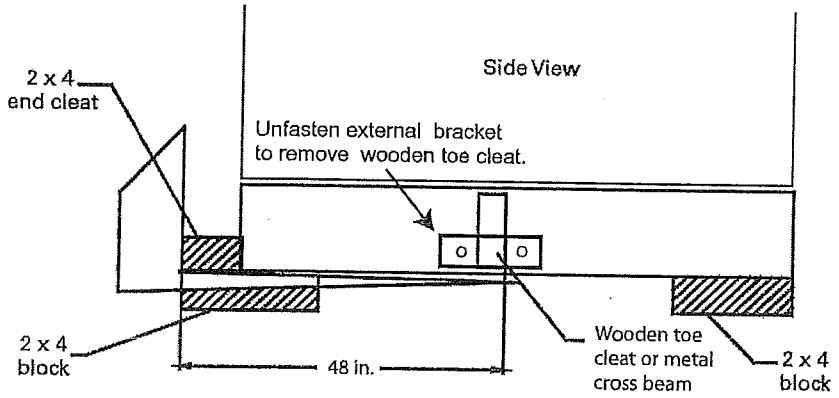

Unit Placement and Assembly

If the air handler ships in subassemblies or in individual sections, some assembly is required, including:

- Ceiling-suspended indoor unit assembly; see See "Ceiling Suspension for Indoor Air Handlers Sizes 3-57" on page 30.
- Section-to-section assembly; see "Section-to-Section Assembly" on page 32.

⚠ WARNING

Toxic Fumes!

Keep open flame away from unit exterior or interior. Do not weld or use cutting torch on the exterior or interior of the unit. The unit contains polyurethane insulation. Failure to keep open flame away form unit exterior or interior could result in the production of toxic gas that could result in death or serious injury.

NOTICE:

Temperature Limit!

The internal sections of this unit containing electrical components must not exceed 104° F operating temperature. Internal sections of the unit not containing electrical components must not exceed 200° F temperature. Failure to comply with temperature requirements could cause equipment damage.

Unit Placement

⚠ WARNING

Heavy Objects!

Always place, assemble, and suspend sections/subassemblies one at a time. Placing, assembling, and/or suspending more than one section/subassembly at a time could result in death, serious injury, or equipment damage.

NOTICE

Microbial Growth!

The roof curb or foundation must be level and the condensate drain at the proper height for proper coil drainage and condensate flow. Standing water and wet surfaces inside the equipment can become an amplification site for microbial growth (mold), which may cause odors and damage to the equipment and building materials.

If a unit arrives in sections, then each section must be individually hoisted, set on the housekeeping pad, roof curb, or pier mount and then assembled.

Refer to the unit submittals and unit tagging for correct placement of all sections. If there are any discrepancies between the submittals and the unit tagging, contact your local Trane representative before proceeding.

Following the order of the sections on the unit submittals and tagging, individually place each unassembled section or subassembly in the appropriate installation location.

Note: *Prior to placing fan section in the appropriate installation location, verify shipping tie-downs have been removed.*

For outdoor units, the pipe cabinet must also be mounted as an individual section. Refer to "Pipe Cabinet Installation" on page 40 for specific instructions.

When mounting the unit on a roof curb, make sure the gasketing between the roof curb and unit base provides an airtight seal.

When mounting the unit on a pier mount, locate one pier at each corner **as a minimum**, directly underneath any shipping split (ensure full support under each side) and then every four feet at equally spaced intervals around the perimeter of the unit. Both the unit and the pipe cabinet should be supported by their base around the entire perimeter. See Figure 11 and Figure 12.

For proper operation, the unit must be installed level (zero tolerance) in both horizontal axes. For vertical discharge units, allow space under the unit for supply air ductwork connections.

Figure 11. Piers located in each corner and spaced evenly every four feet

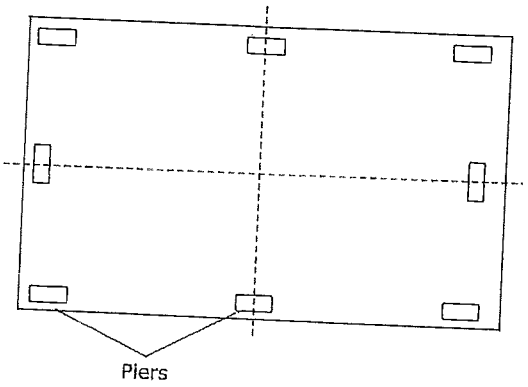

Figure 12. Side view with two shipping splits - locate one pier directly under each shipping split

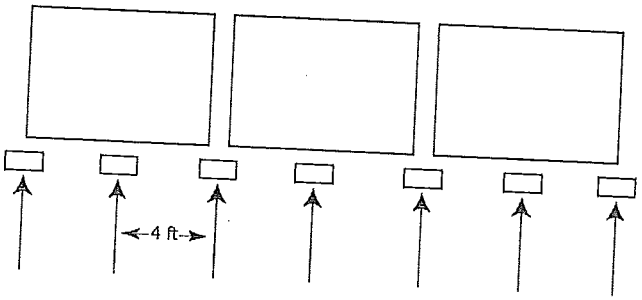

Note: *Piers beneath shipping splits must be structurally sound to support the weight of the unit.*

Unit Assembly

Note: *Air handlers often include optional factory-provided casing penetration entry points for field-provided wiring. Consider overall unit serviceability and accessibility before mounting, running wires (power), making cabinet penetrations, or mounting any components to the cabinet.*

See "Component Installation Requirements" on page 49 for special assembly/installation considerations.

Removing the Shipping Skid

Remove the wooden shipping blocks, wooden toe cleat if there is one, and end cleats prior to lowering unit into final position or installing the unit to the roof curb.

Ceiling Suspension for Indoor Air Handlers Sizes 3-57

Note: *Ceiling suspension is not recommended for units larger than size 57 unless using a field-provided mounting frame.*

Using a Field-Provided Mounting Frame

⚠ WARNING
Heavy Objects!

If a field-provided mounting frame is used for ceiling suspension, the installer/contractor must provide a ceiling-suspended mounting frame designed to support the length, width, and weight of the entire air-handling unit. Failure to use proper mounting frame, structural channels, and hangers could result in unit falling from its mounting location which could result in death or serious injury.

See "Unit Dimensions and Weights" on page 16 for approximate weights.

Note: *It is the building engineer's responsibility to size the structural channels and to provide the appropriate hangers.*

Structural channels in a field-provided frame can be mounted parallel to airflow or perpendicular to airflow:

- For parallel-to-airflow channels, size channels based on a four-point load distribution (see Figure 13.
- For perpendicular-to-airflow channels, size channels based on the load distribution of the individual sections and install the channels so that *both ends of every section are supported* (see Figure 14).

Figure 13. Typical suspension method using parallel channels

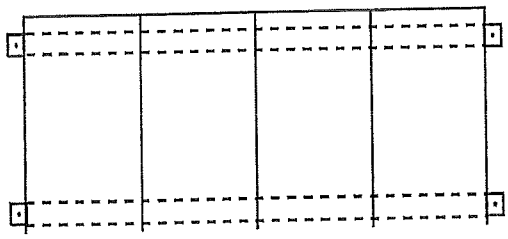

Figure 14. Typical ceiling suspension using perpendicular channels

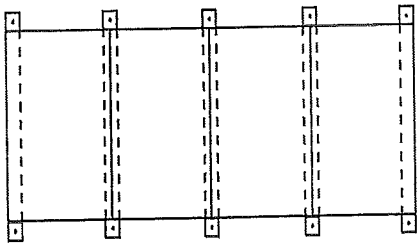

Using Integral Base Frame

If using the factory-provided integral base frame for ceiling suspension, individual sections and/or subassemblies will have base frame shipping splits and base frame lifting lugs. When using the base frame for ceiling suspension:

- Suspend the unit (on both sides of the unit) at each shipping split lug as well as the four corners of the unit (see Figure 15). See Figure 7 and Table 8 on page 27 for lug hole sizes.
- Bolt shipping splits together.

Note: *The hanger rods must extend through the bottom of the base lug. It is the building engineer's responsibility to provide the appropriate hangers.*

Figure 15. Ceiling suspension for unit sizes 3-57

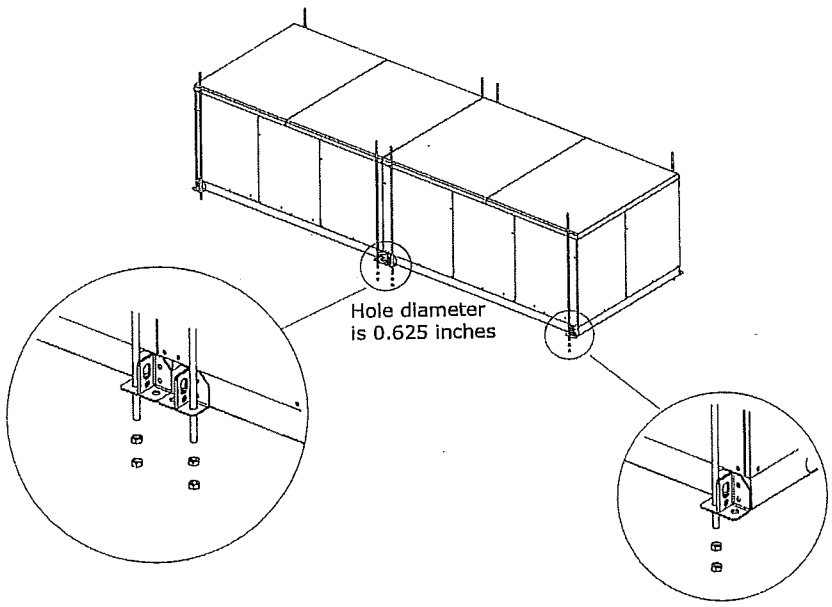

Section-to-Section Assembly

Air handlers ship with all necessary assembly hardware and gasket material. The hardware should be packaged in either a clear plastic envelope or cardboard box inside the fan section, access section, or mixing box.

The number of sections to be assembled often makes it necessary to use more than one section to ship the assembly material; therefore, check all sections thoroughly before contacting your Trane sales representative to report missing items.

Sections are joined with gasketing applied to one of the mating surfaces and hardware to bolt the sections together. The gasketing for section-to-section joints is a closed cell foam with adhesive backing.

To assemble the unit:

1. Locate the mounting hardware and gasket material.
2. All shipping supports and crating on the face of the sections must be removed and discarded to permit proper fit-up and sealing of the surfaces. Remove any shipping bolts located on the mounting surfaces of the sections (see Figure 16).
3. Apply the gasketing to one of the mating surfaces; see Figure 16, Figure 17, and Figure 18.

Figure 16. Section-to-section installation

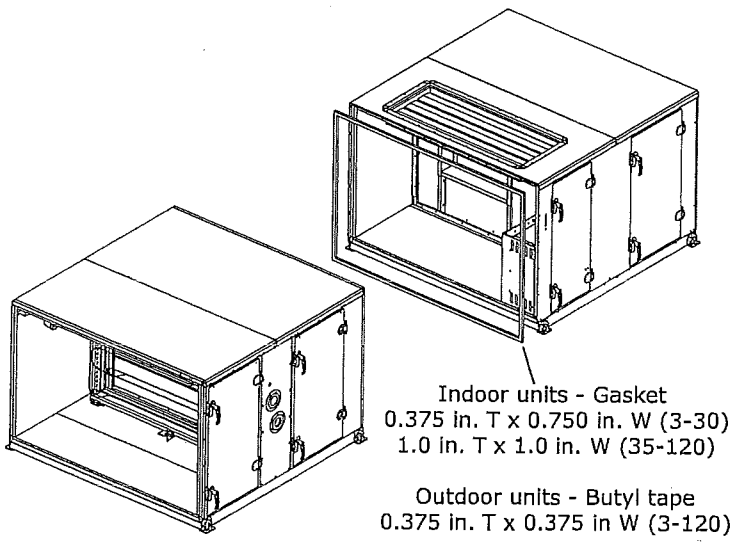

Figure 17. Coil-section-to-downstream-section bolt up with splash guard (shown for sizes 3-30)

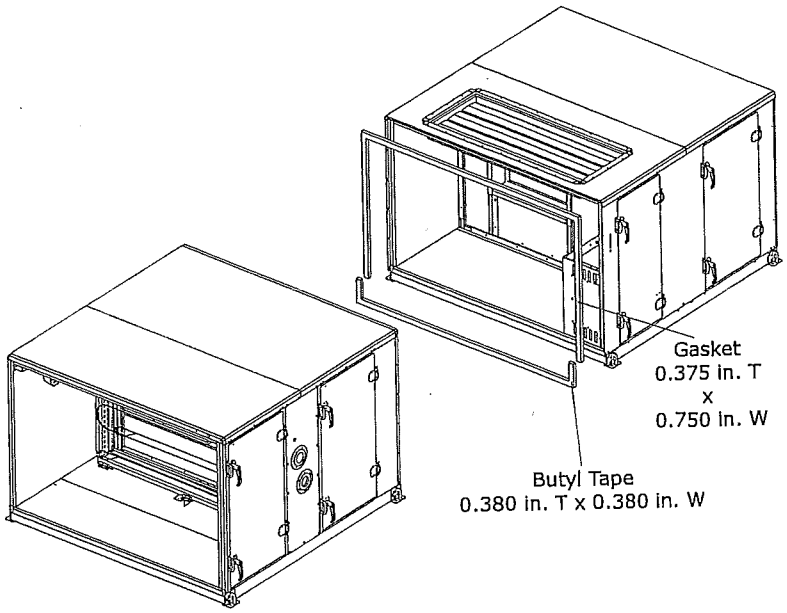

Figure 18. Stacked unit assembly (shown for sizes 3-50)

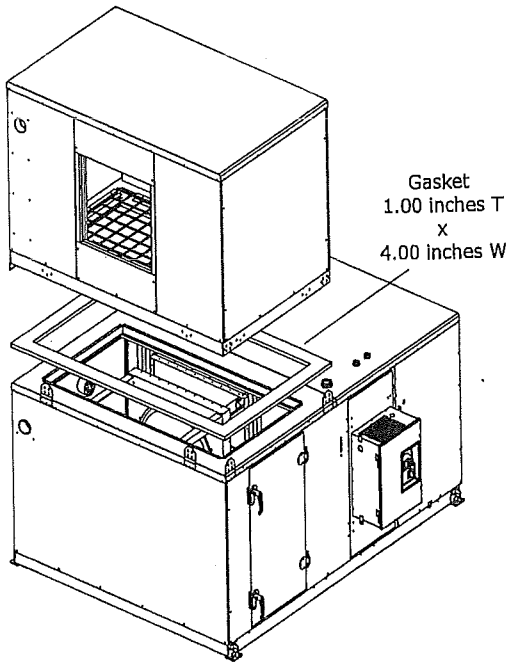

Figure 19. Horizontal section-to-section quick connects

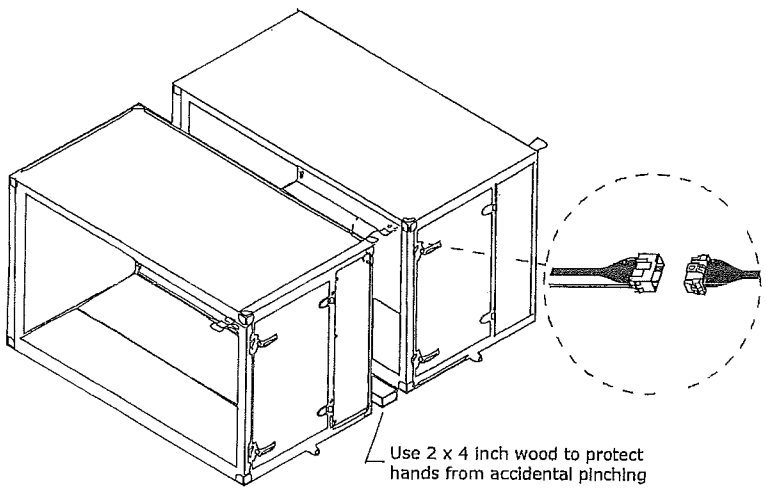

4. If the unit is equipped with factory-mounted controls, move adjacent subassembly within six inches and fasten quick connects where the sections bolt together (see Figure 19).

Note: *Reference the appropriate controller manual for more details on the installation of units with factory-mounted controls.*

5. Use a bar clamp to pull adjacent shipping section lifting lugs together.

Figure 20. Wedge block attachment

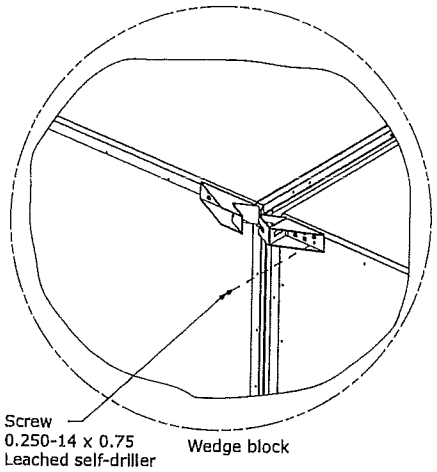

6. For indoor units sizes 66-120 and for outdoor units size 10-120, a wedge block is provided to aid in pulling and aligning the units together. Attach the wedge blocks to both sides of the units being pulled together, matching the correct wedge block with the correct hole pattern. See Figure 20.

7. Verify that the subassembly with the overhang profile on the roof is higher than the mating subassembly. If it is not, raise one end of the subassembly and bring the unit together. See Figure 21. In addition, an adjustment can also be made to the height of the roof of either subassembly by loosening the screws in the vertical channels or component structure and adjust the height of the roof (see Figure 22 and Figure 23).

8. Due to unlevel floor and platforms, the roof may be misaligned as shown in Figure 21. A common solution is to raise one end of the shipping section to clear the hemming before pulling the units together.

Figure 21. Roof alignment (indoor unit only)

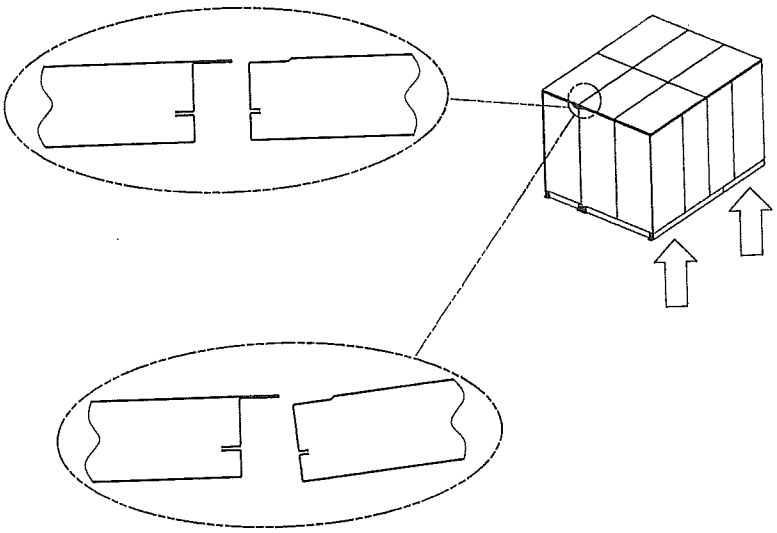

Figure 22. Adjust height of roof by adjusting vertical channels

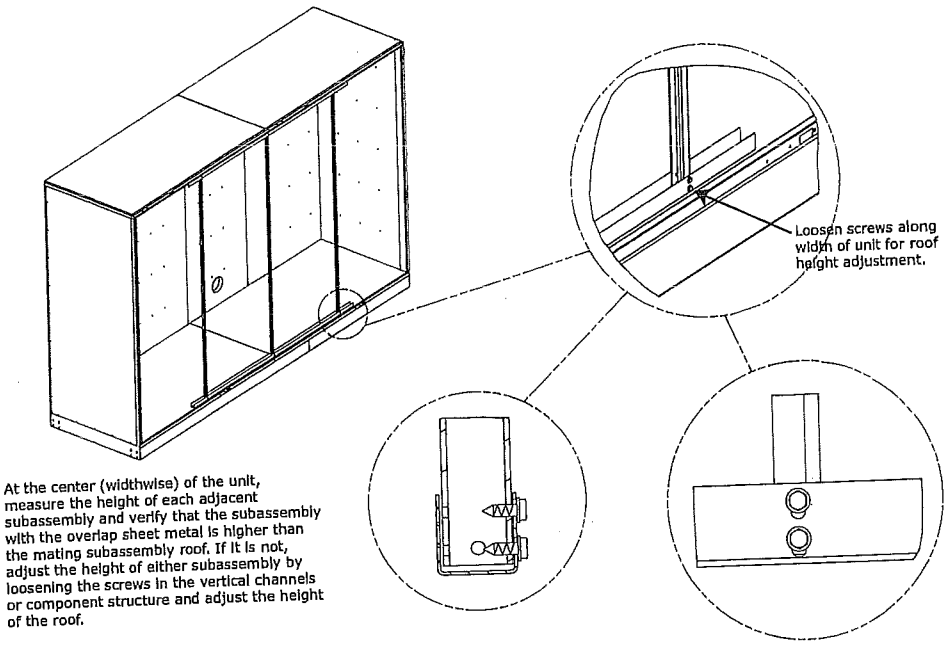

Figure 23. Adjust height of roof by loosening screws

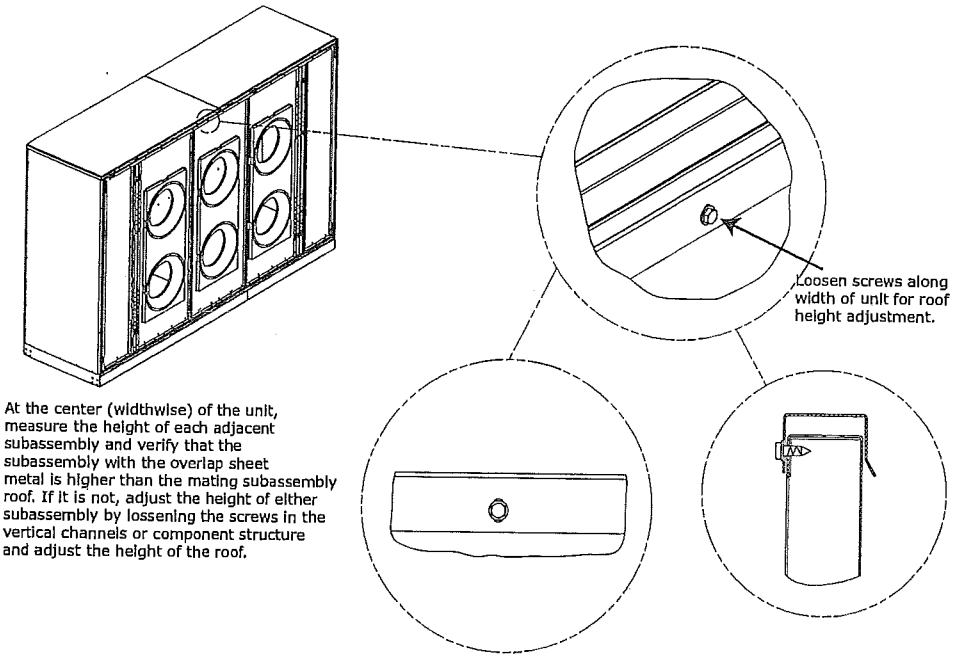

9. For unit sizes 3-30, bolt the unit base frames together using 5/16-inch bolts (see Figure 24).

Figure 24. Base frame split assembly for sizes 3-30

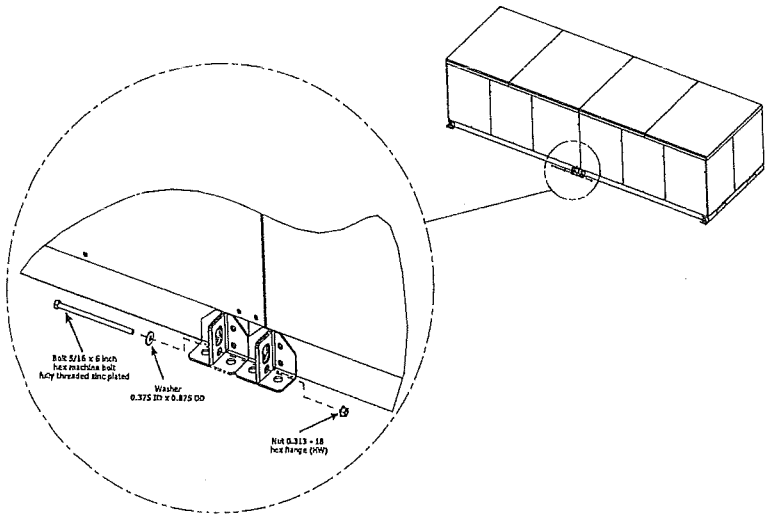

10. For unit sizes 35-120, bolt the unit base frames together using ½-threaded rod (see Figure 25).

11. For sizes 66-120 only, bolt through the wedge blocks using a ½-threaded rod (see Figure 25). Alternate between tightening on the lifting lug bolts and wedge block bolts until the shipping section comes together.

Figure 25. Wedge block attachment used for sizes 66-120 only

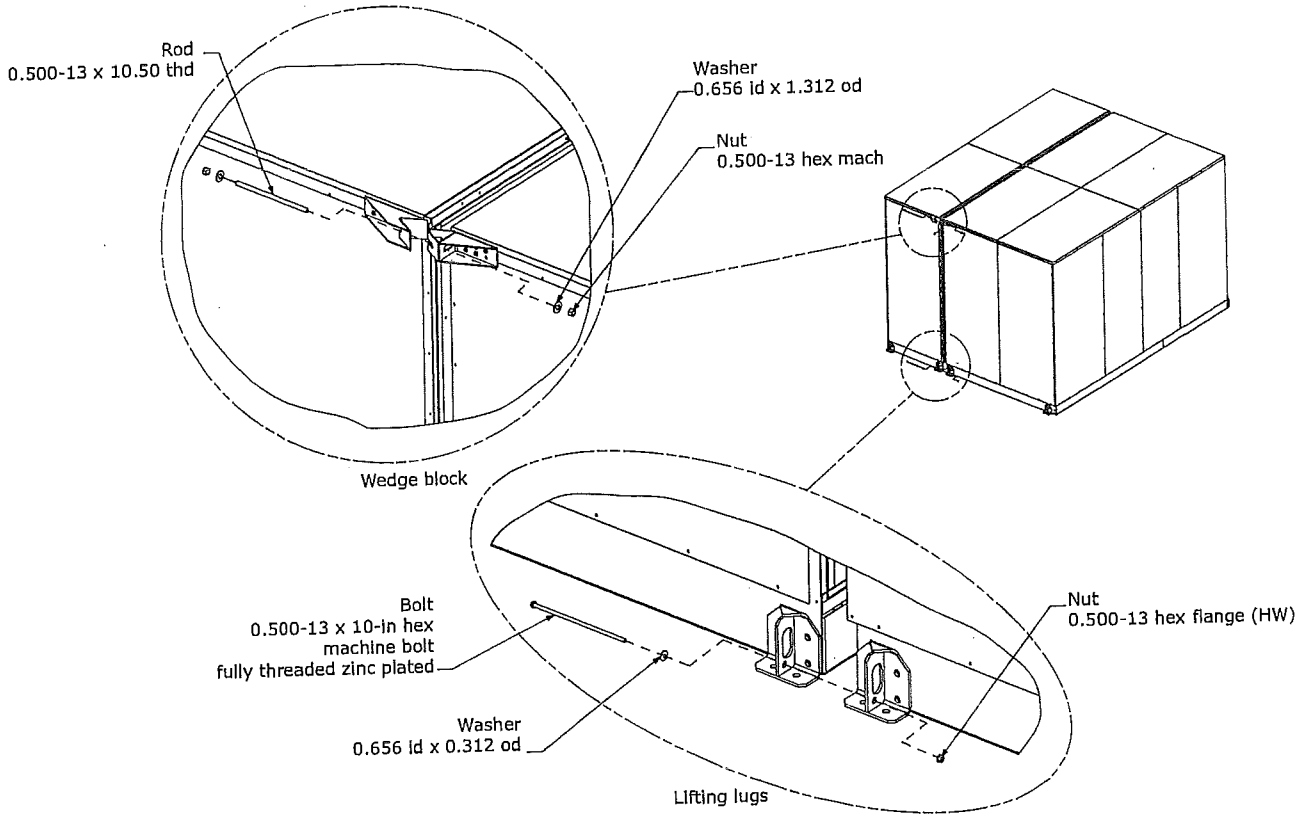

12. Use straps and come-alongs to compress the gasketing and pull the sections together along the height of the unit.

13. Install the section-to-section screws inserting the appropriate screws through the overlapping flanges using a powered impact gun and taking care not to strip the screws. Outdoor air handlers will ship with a seam cap that is to be installed over the section-to-section seams. Factory-supplied butyl tape must be applied over the seam prior to seam cap being applied. See Figure 26.

Figure 26. Section-to-section seam cap installation

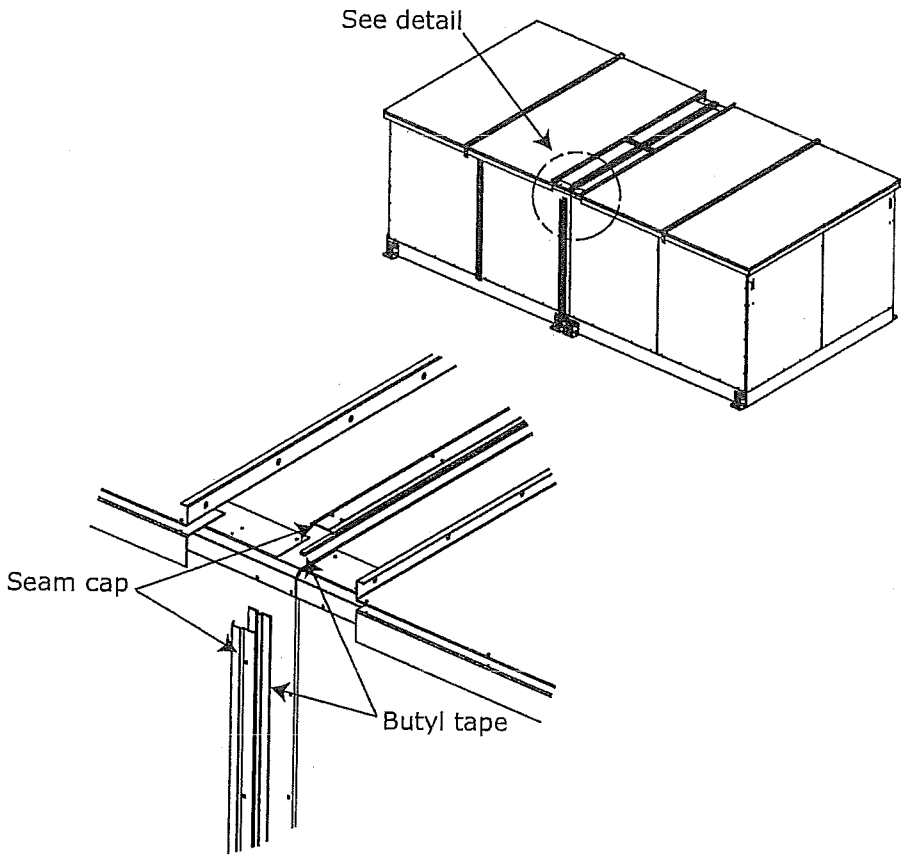

14. For stacked units, remove top level lifting lugs one at a time and replace with factory-provided stacking brackets at each shipping split corner and end of unit perpendicular to airflow after sections are set in final position (see Figure 27). Be sure to compress the gasketing to ensure a good air seal between the upper and lower sections.

Figure 27. Stacked unit hardware

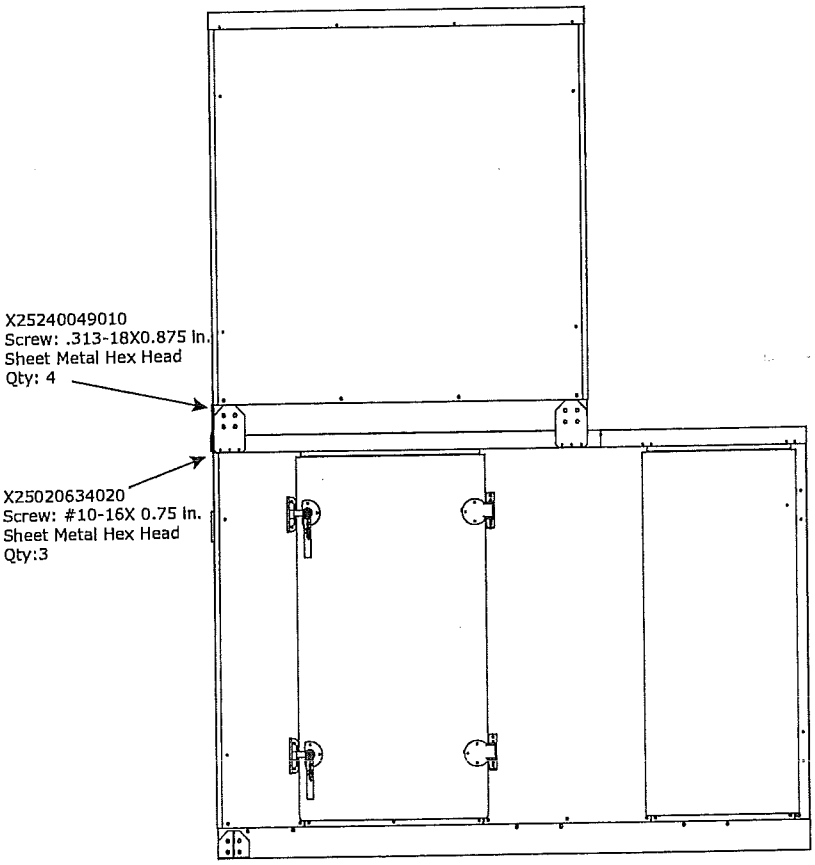

15. For outdoor air handlers, attach roof overhang angle with number 10 screws. Join outdoor roof panels together at the seams in the direction perpendicular to airflow and secure them in place with 5/16-inch x 3/4-inch bolts and 5/16 lock nuts. Install the roof joint strip to cover the seam between two outdoor roof panels in the perpendicular to airflow direction of. Use 3/8-inch butyl tape to cover the seam between two outdoor roof panels overhang at the side the unit. Bend joint strip over roof panel and use two number 10 sheet metal screws (one in each roof panel) to secure joint strip. Trim the roof joint strip to insure that it does not protrude more than 1/16-inch beyond outdoor roof overhang (see Figure 28).

Figure 28. Join outdoor roof panels at the seams

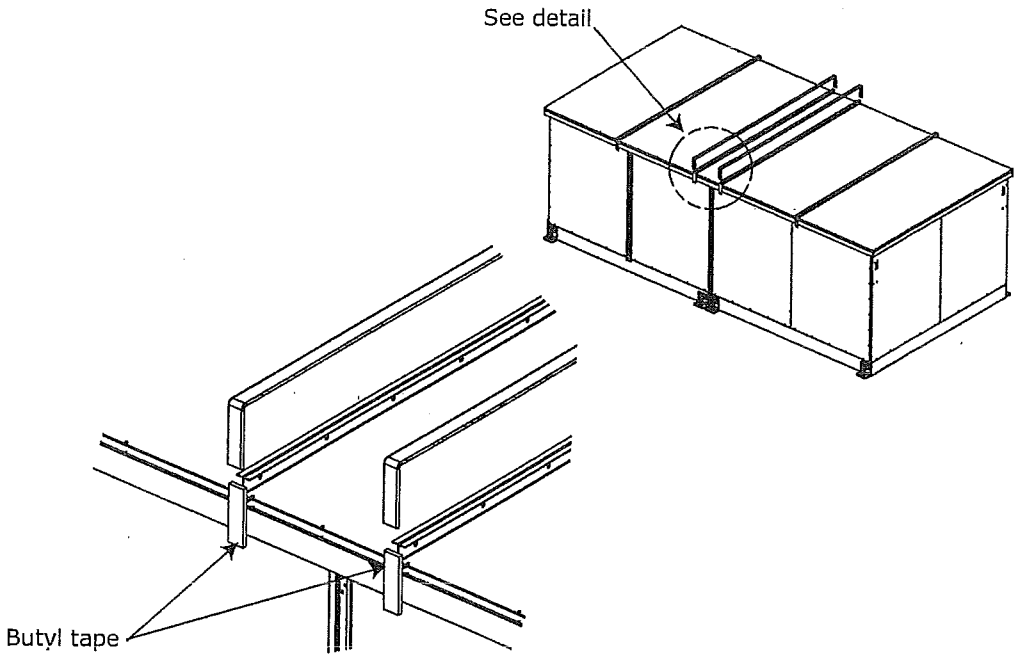

Pipe Cabinet Installation

1. After air handler is completely installed and checked for accuracy of level and square, pipe cabinet install can begin.
2. Remove pipe cabinet base cross member by removing the four bolts and nuts.
3. Check to ensure that the structure the pipe cabinet is to be installed on is square and level.

4. Install 3/8-inch x 3/8-inch white butyl tape to flanged side of pipe cabinet wall and remove paper backing from tape. See Figure 29.

Figure 29. Pipe cabinet installation

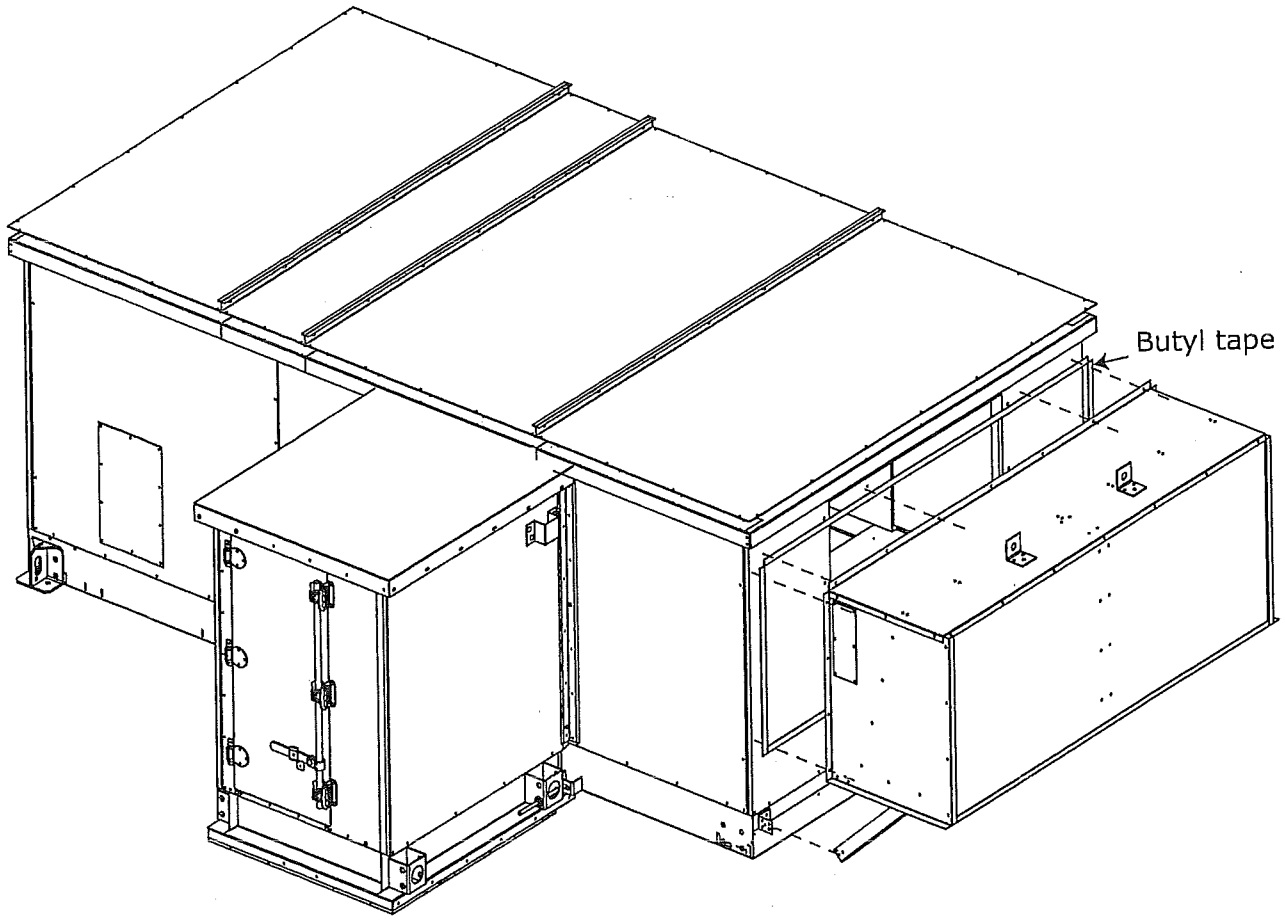

5. Lift cabinet into place on to pipe cabinet curb.
6. Slide pipe cabinet tight up against the sidewall of the air handler.
7. Check pipe cabinet side walls to ensure they are plumb.
8. Apply a bead of caulk along the corner between the pipe cabinet and air handler wall prior to installing connecting angle.

9. Install inside corner cap. See Figure 30 Detail A and B.
10. Install 3/8-inch x 3/8-inch white butyl tape to unit wall where pipe cabinet roof connects.
11. Lift pipe cabinet roof into place and attach to unit wall with screws. See Figure 30.

Figure 30. Pipe cabinet

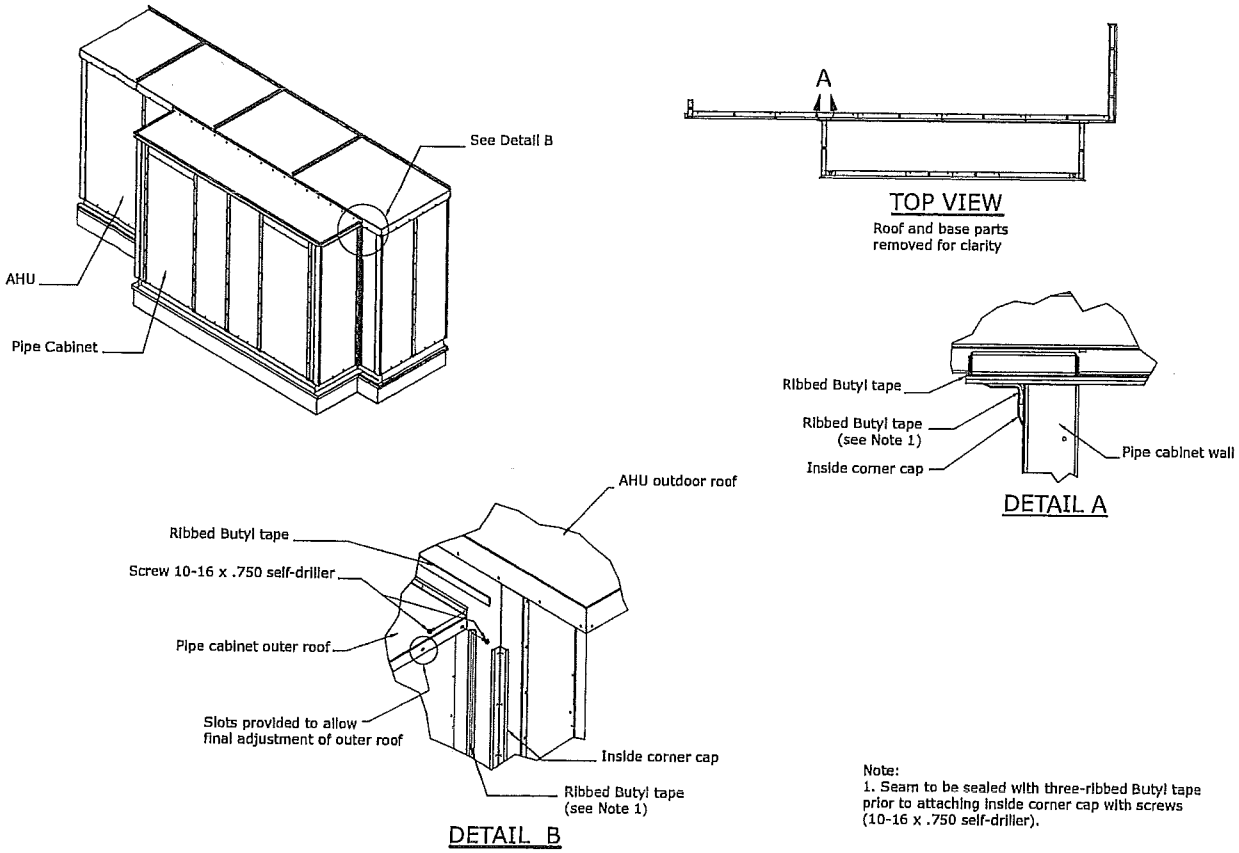

Outdoor Unit Weather Hood(s)

1. Per the unit drawing determine mounting location of the unit weather hoods.
2. Using the factory provided screws mount the weather hoods to the unit.
3. On larger units, weather hoods may be large enough to require angled down supports. In those cases, the angles are shipped attached to the hood but will need to be connected to the air handler by the installing contractor. See Figure 31.

Note: *It is required that the hoods be sealed to the unit using factory-provided butyl/caulk tape.*

Figure 31. Hood installation

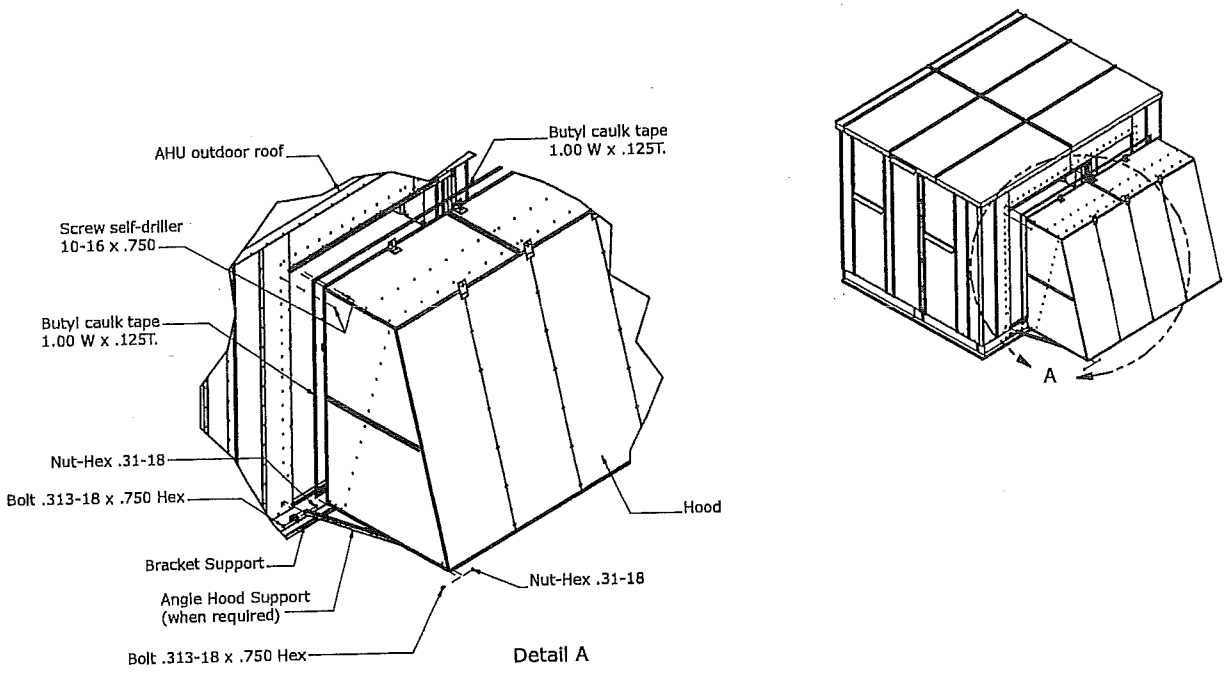

Indoor Dual-Path Split Dehumidification Unit (SDU)/Winterizer Assembly

⚠ WARNING

Heavy Objects!

Do NOT stack air handlers unless factory-designed and factory-approved. When stacking units, factory-designed unit support brackets must be used. Stacking units without factory-approval and without using factory-provided support brackets could result in the base unit collapsing under the weight of the top unit which could result in death, serious injury and equipment damage.

A dual-path, SDU/winterizer air handler consists of two units that are stacked together in a draw-thru arrangement that share one supply fan. The unit on the first level (primary unit) is designed to handle the return air and is larger than the unit on the second level (secondary unit), which is designed to handle outside air.

Factory-designed unit support brackets are provided with all factory-approved, dual-path SDUs or winterizer air handlers.

- A horizontal SDU/winterizer dual-path air handler incorporates a horizontal supply fan on the first level with a top opening in the primary unit that aligns with a bottom opening in the secondary unit.
- A vertical SDU/winterizer dual-path air handler incorporates a vertical supply fan on the second level with a back opening that aligns with a front opening in the secondary unit.

To assemble air handlers utilizing factory-approved and factory-provided dissimilar unit sizes for horizontal SDU or winterizer applications, join all similar size shipping sections per "Section-to-Section Assembly," Step 1 through Step 13, p. 32 through p. 39.

Horizontal SDU/Winterizer Indoor Air Handler Assembly

To assemble dissimilar unit sizes in a horizontal SDU/winterizer configuration:

1. Locate the mounting hardware and gasket material.

Note: *Black unit support brackets ship pre-installed on the primary (larger) unit section.*

2. Apply gasket in direction of airflow between the black unit support brackets to the roof of the primary unit. See Figure 32. The gasket needs to be placed such that it will be directly under the integral base frame of the secondary (smaller) unit to be stacked on top. The secondary unit will be centered along the width on the primary unit.

Figure 32. Apply gasket in direction of airflow

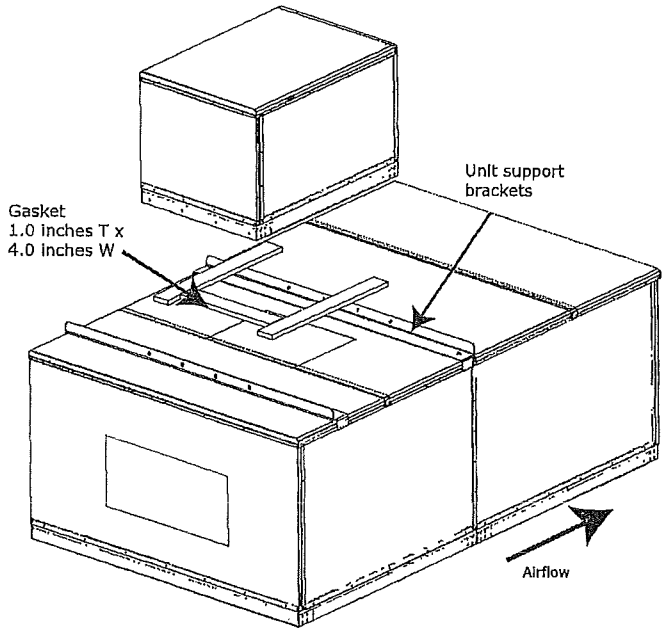

3. If there is an opening in the roof of the primary unit, apply gasket perpendicular to airflow on the roof next to the opening (air entering side only).

4. Lift the secondary unit, following instructions in "General Lifting Considerations" on page 25 (see Figure 6), and place on the black unit support brackets (see Figure 33). The secondary unit must be centered on the primary unit between the black unit support brackets.

Figure 33. Place secondary unit on black unit support brackets.

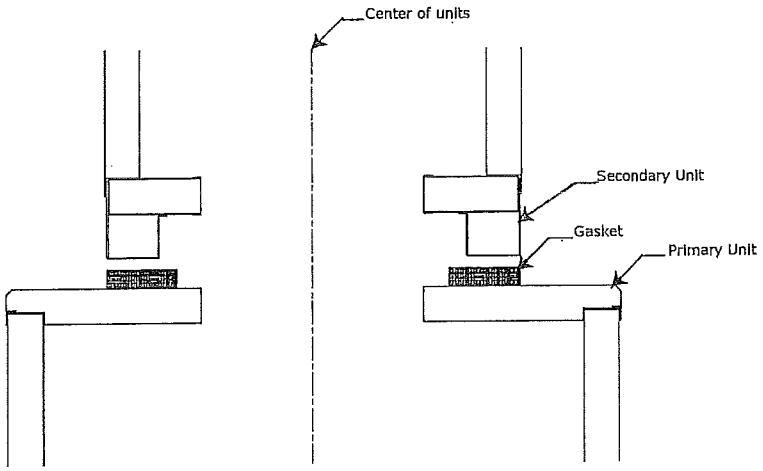

5. Install screws as shown in Figure 34 inserting the appropriate screws using a powered impact gun and taking care not to strip the screws.

Figure 34. Install screws using powered impact gun.

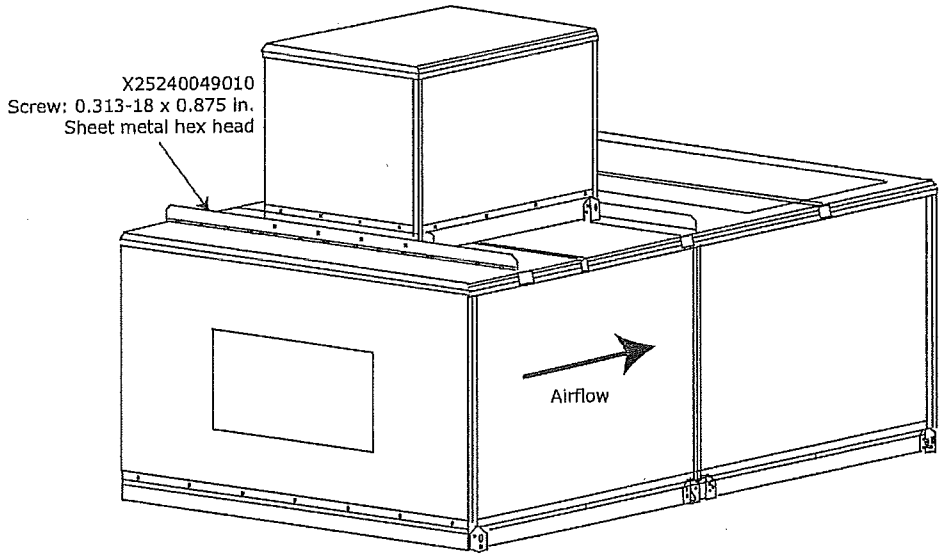

6. Remove the secondary unit lifting lugs one at a time and reinstall screws after sections are set in final position.

Vertical SDU/Winterizer Indoor Air Handler Assembly

To assemble dissimilar unit sizes in a vertical SDU/winterizer configuration:

1. Apply gasketing to the mating surface of the secondary unit (see Figure 35).

Figure 35. Apply gasketing to mating surface of secondary unit.

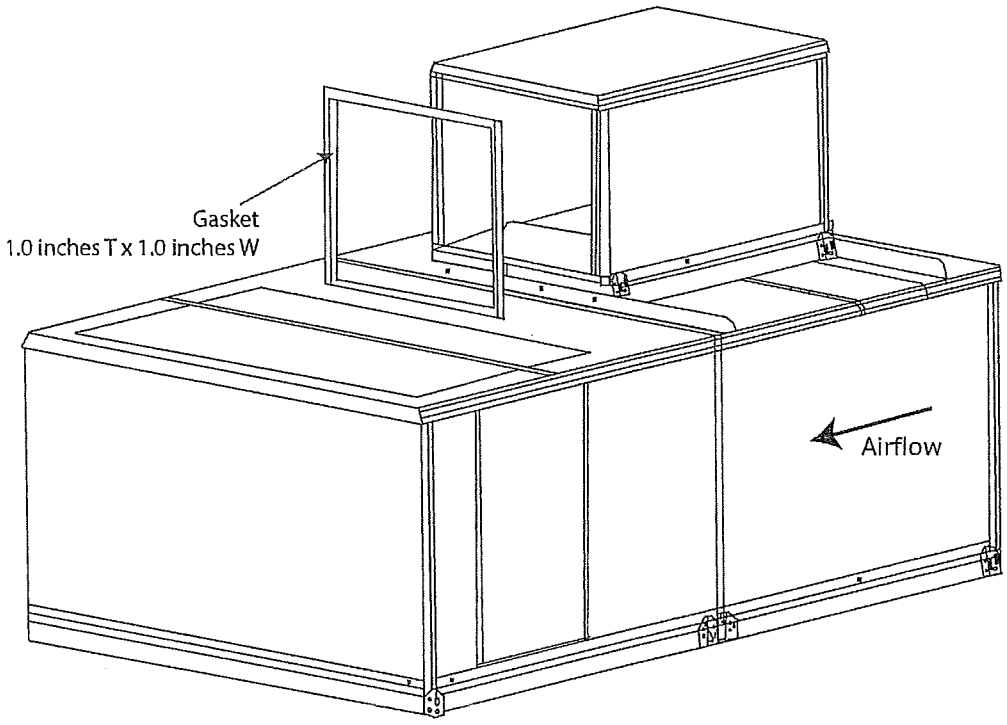

2. Apply gasketing to the mating surface of the primary unit at the bottom of the opening (see Figure 36.

Figure 36. Apply gasketing to the mating surface of the primary unit.

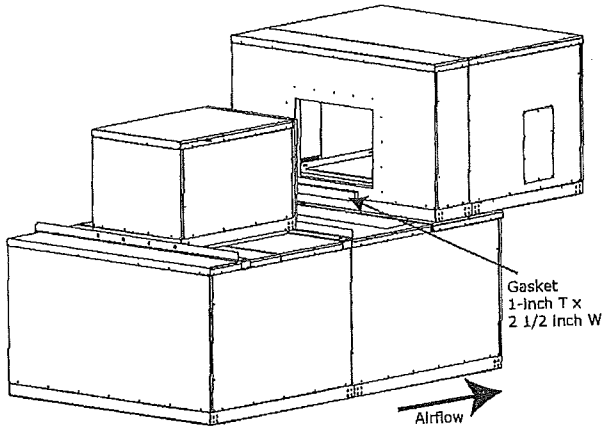

3. Lift the secondary unit, follow instructions in "General Lifting Considerations" on page 25 (see Figure 6), and place on the black unit support brackets (see Figure 33, p. 45. The secondary unit must be centered on the primary unit between the black unit support brackets.
4. Install trim angles as shown in Figure 37 inserting the 10-16 x 3/4-inch self-drilling screws using a powered impact gun and taking care not to strip the screws.

Figure 37. Install trim angles

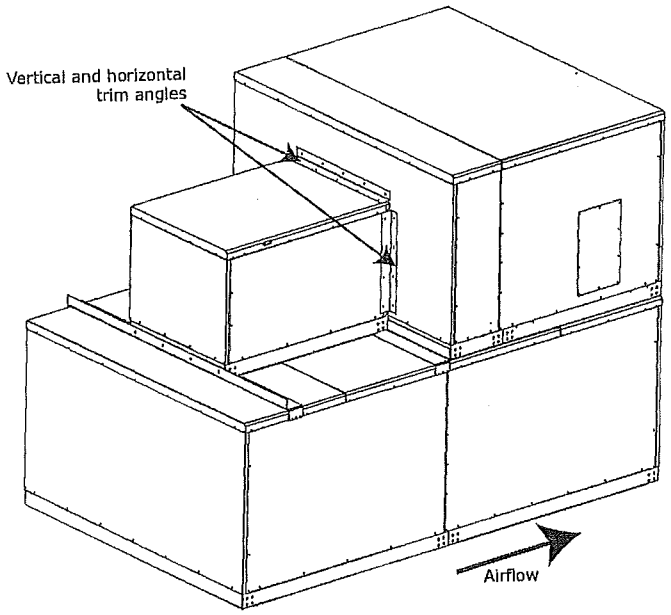

External Raceway Assembly

For air handling units with factory-installed power wiring extending from the first level to the second level, wiring must be connected and assembled in a raceway.

1. Remove protective foam cover from connectors.
2. Attach stacked raceway harness connectors, matching connector colors on the high voltage side and connector numbers on the low voltage side.
3. Verify conduit size.
4. Attach covers.
5. Secure conduit.

Figure 38. External raceway

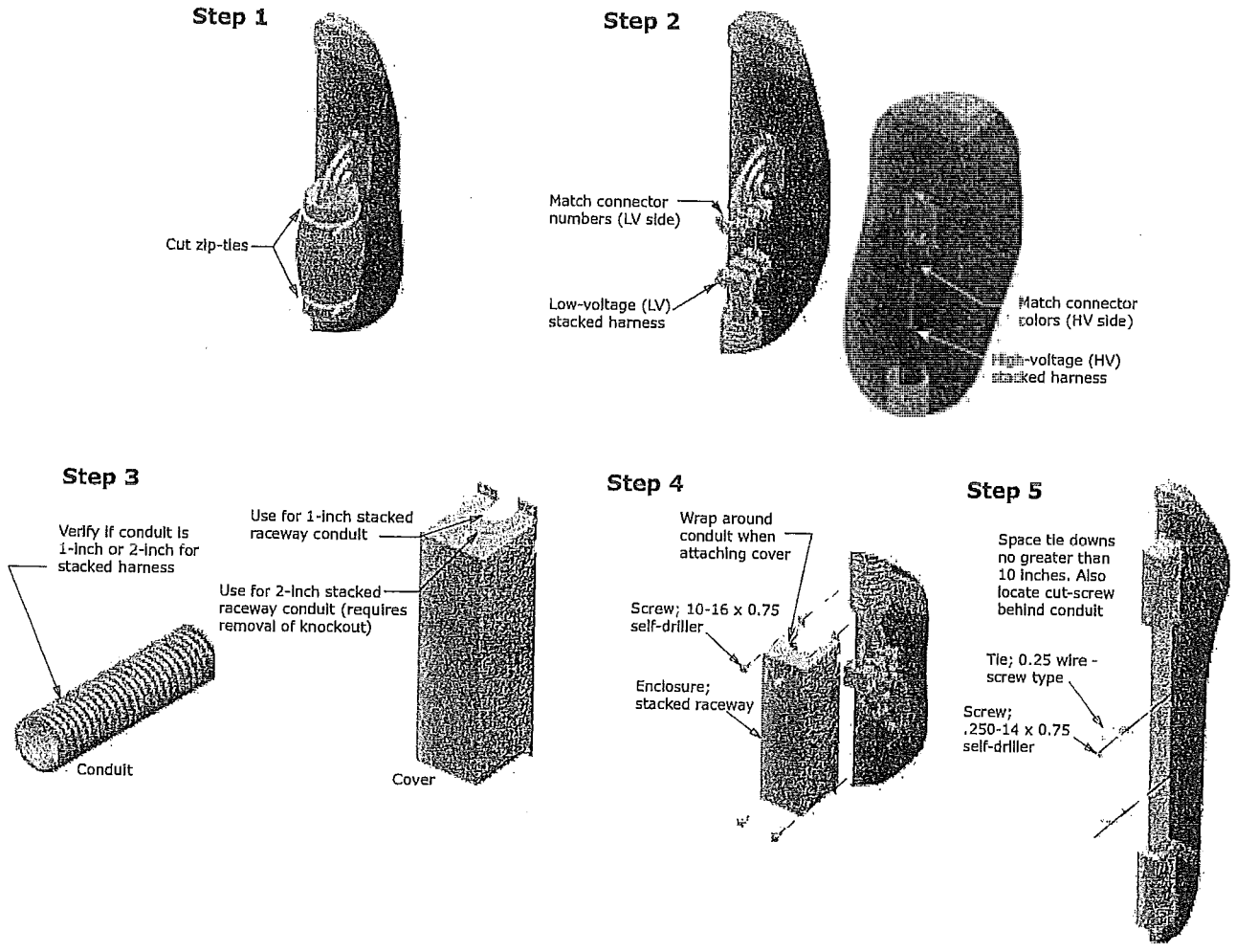

Component Installation Requirements

The components in the air handler may have installation requirements that could affect the unit's performance.

Diffuser Sections

Diffuser sections are usually placed between a fan and a downstream coil or filter. Because placement is critical to unit performance, verify the correct placement of the diffuser section before assembling the unit (see Figure 39).

Figure 39. Diffuser placement sizes 3 to 120

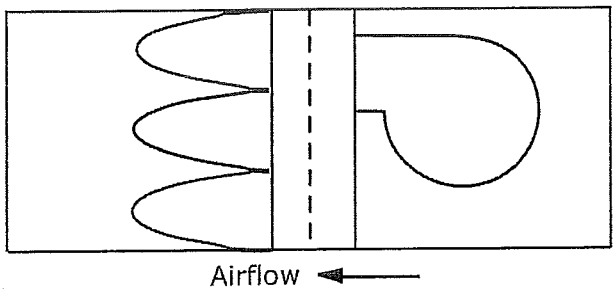

Filter Sections

Bag and cartridge filter sections can be used as a pre-filter section, a final filter section, or both. This use is determined by the filter's placement in relation to the fan.

- A final filter is placed after the fan.
- A pre-filter is placed before the fan.

Note: *Cartridge and bag filters provided by Trane are fitted with a 7/8-inch header that fits in the filter track. If using filters supplied by another manufacturer, filters should be purchased with a 7/8-inch header. In some cases it may be necessary to gasket other manufacturers' filters to ensure a good air seal.*

Filters should be installed when the unit is set. This will protect internal components, such as the heating and cooling coils.

Final Filter Section

A final filter section should not be bolted directly to the face of a fan section. One or more intermediate sections must be placed between the fan discharge and the filter section.

Pre-Filter Section

A pre-filter section has no special installation requirements unless placed directly upstream of a plenum fan. In these configurations, ensure a blank section is placed between the fan inlet and the filter section.

Trane recommends the use of disposable pre-filters with high-efficiency filters. Disposable pre-filters slide into the mounting tracks just ahead of the bag/cartridge filters.

Filter Installation

⚠ WARNING
Hazardous Voltage!

Disconnect all electric power, including remote disconnects before opening door. Follow proper lockout/tagout procedures to ensure the equipment cannot be inadvertently energized. Failure to disconnect power before servicing could result in death or serious injury.

Figure 40. Filter block-off placement

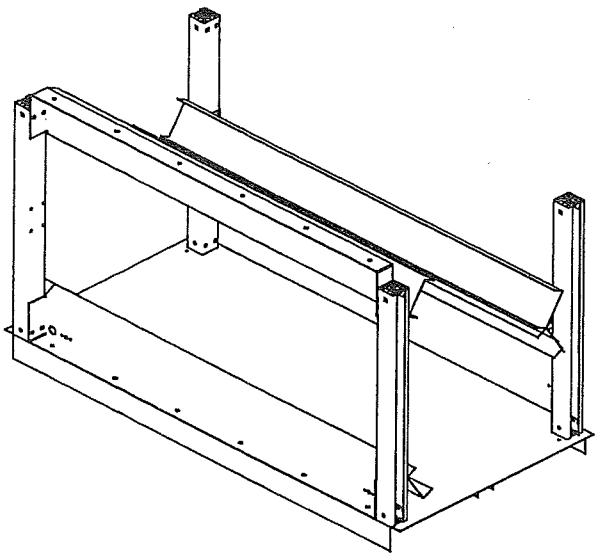

To install filters:

1. Disconnect the power to the unit.
2. Open the filter section access door.
3. Slide the filters into the tracks.

Note: *Bag filters must be installed with the pleats in the vertical plane.*

4. The block-off is permanently installed and will create a seal when the access door is closed.
5. Close the access door slowly to allow any gasketing to compress.

Filter Placement

Figure 41. 2-inch and 4-inch angled filter placement for unit sizes 3-50

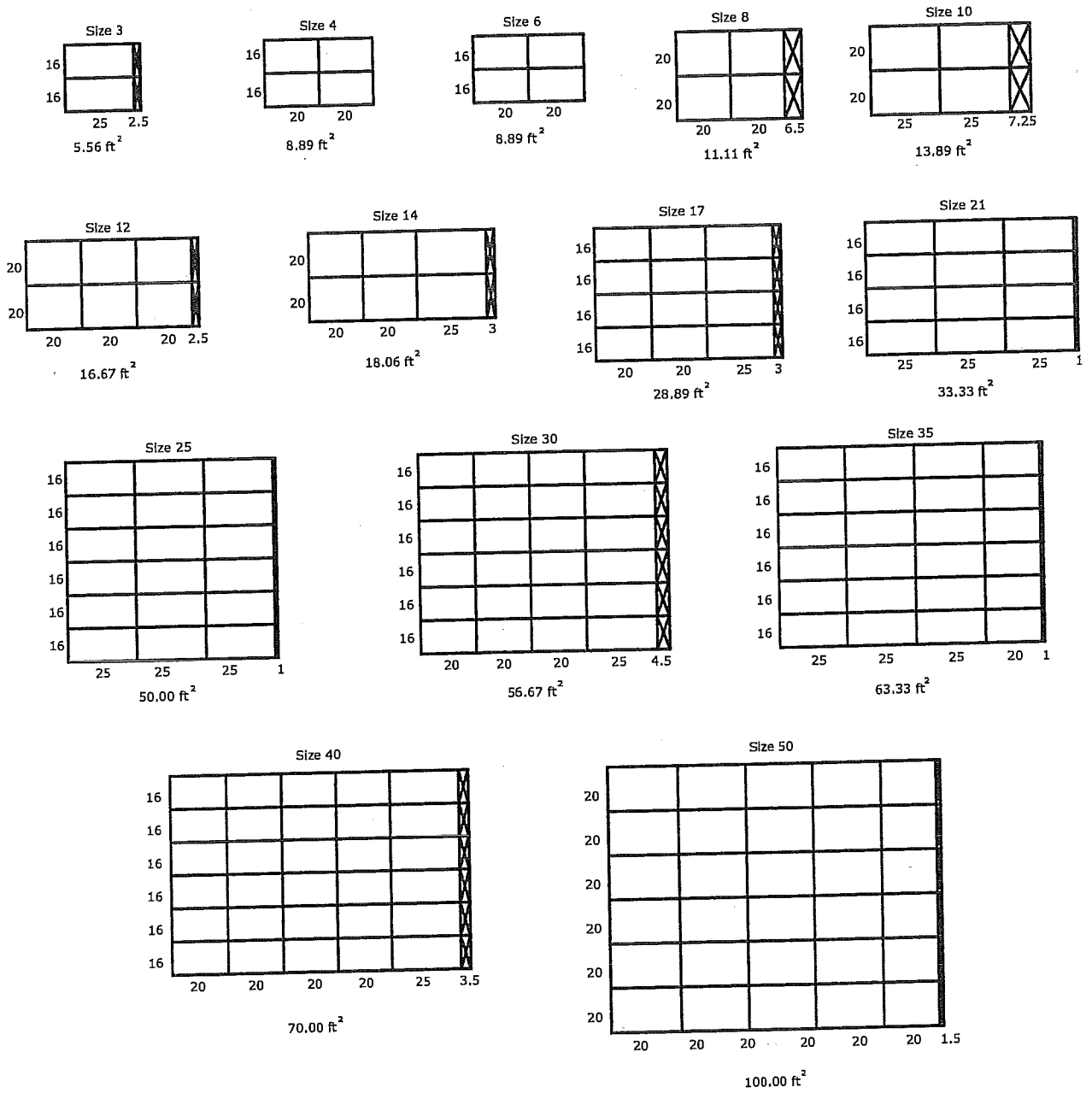

Figure 42. 2-inch and 4-inch angled filter placement for unit sizes 57-120

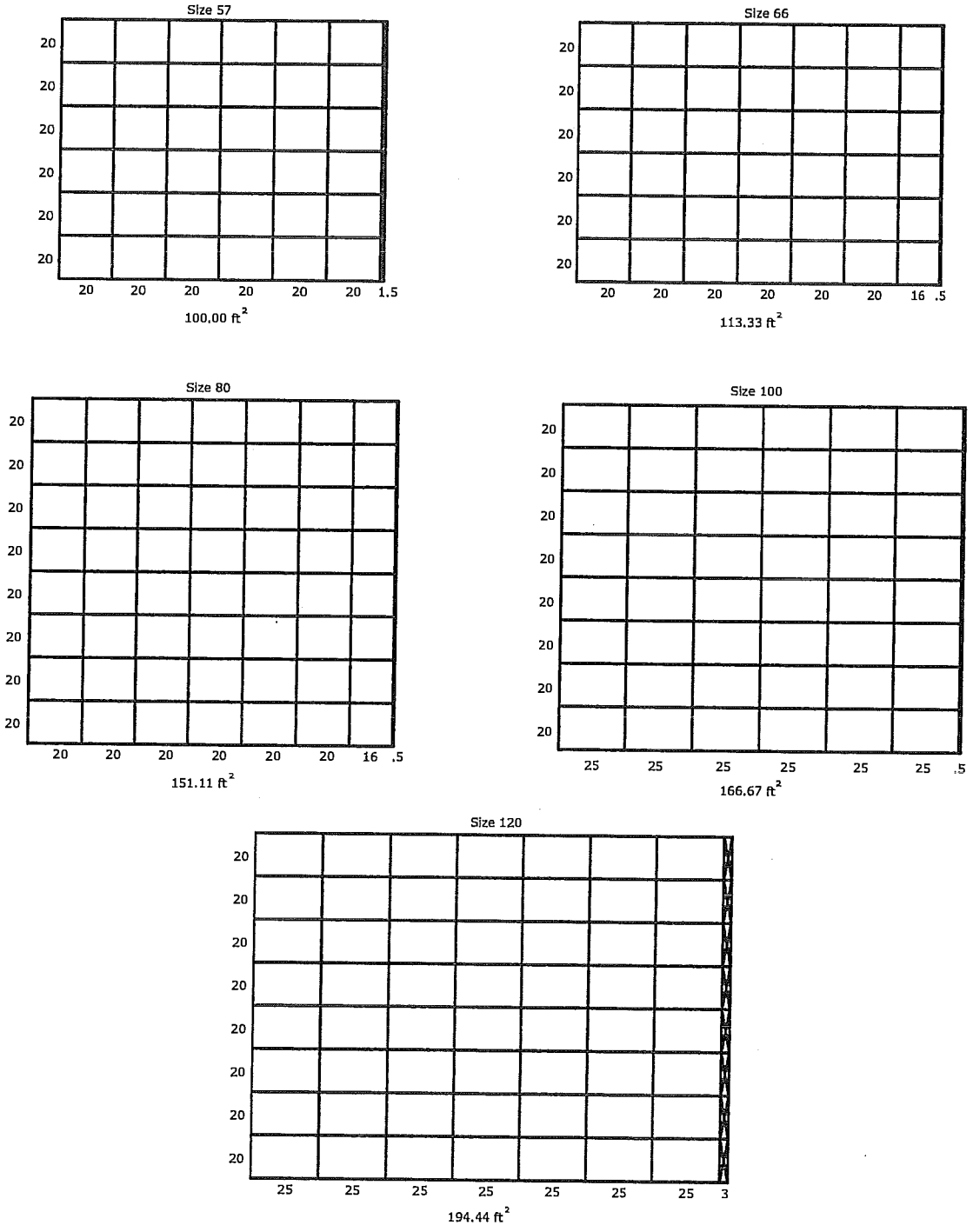

Figure 43. Bag and cartridge side-loading filter placement for unit sizes 3-50

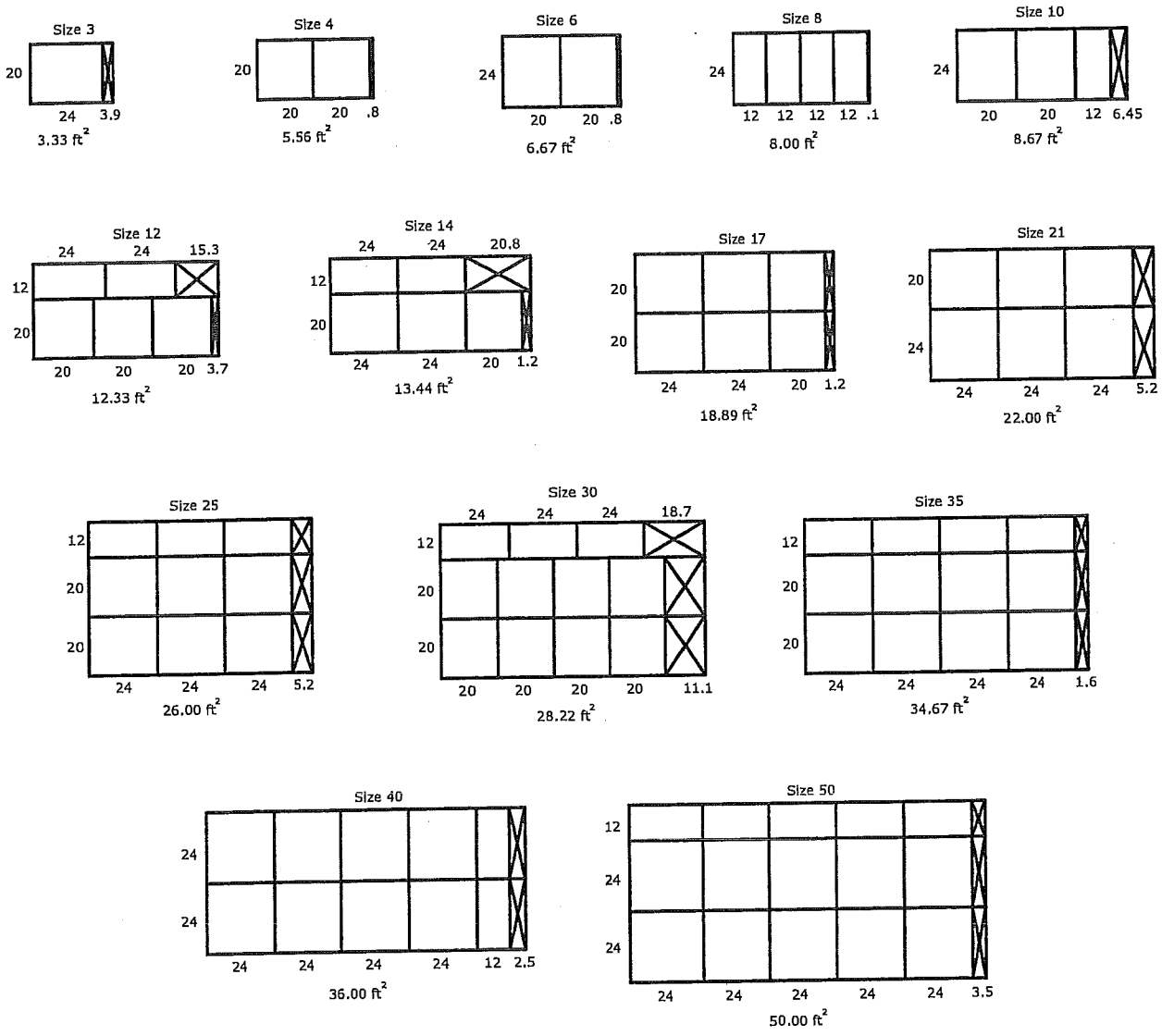

Figure 44. Bag and cartridge side-loading filter placement for unit sizes 57-100

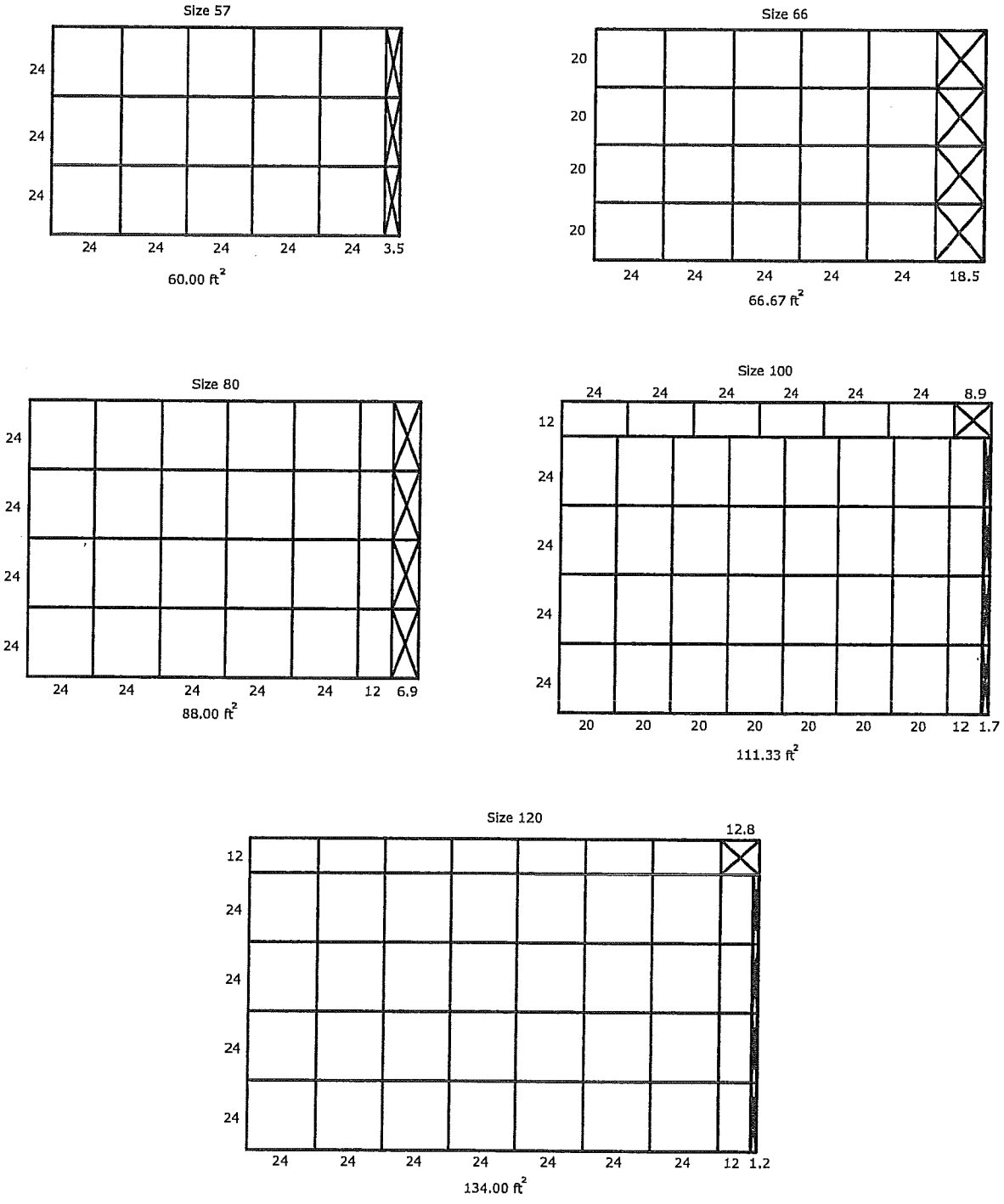

Figure 45. Flat and combination filter placement for unit sizes 3-50

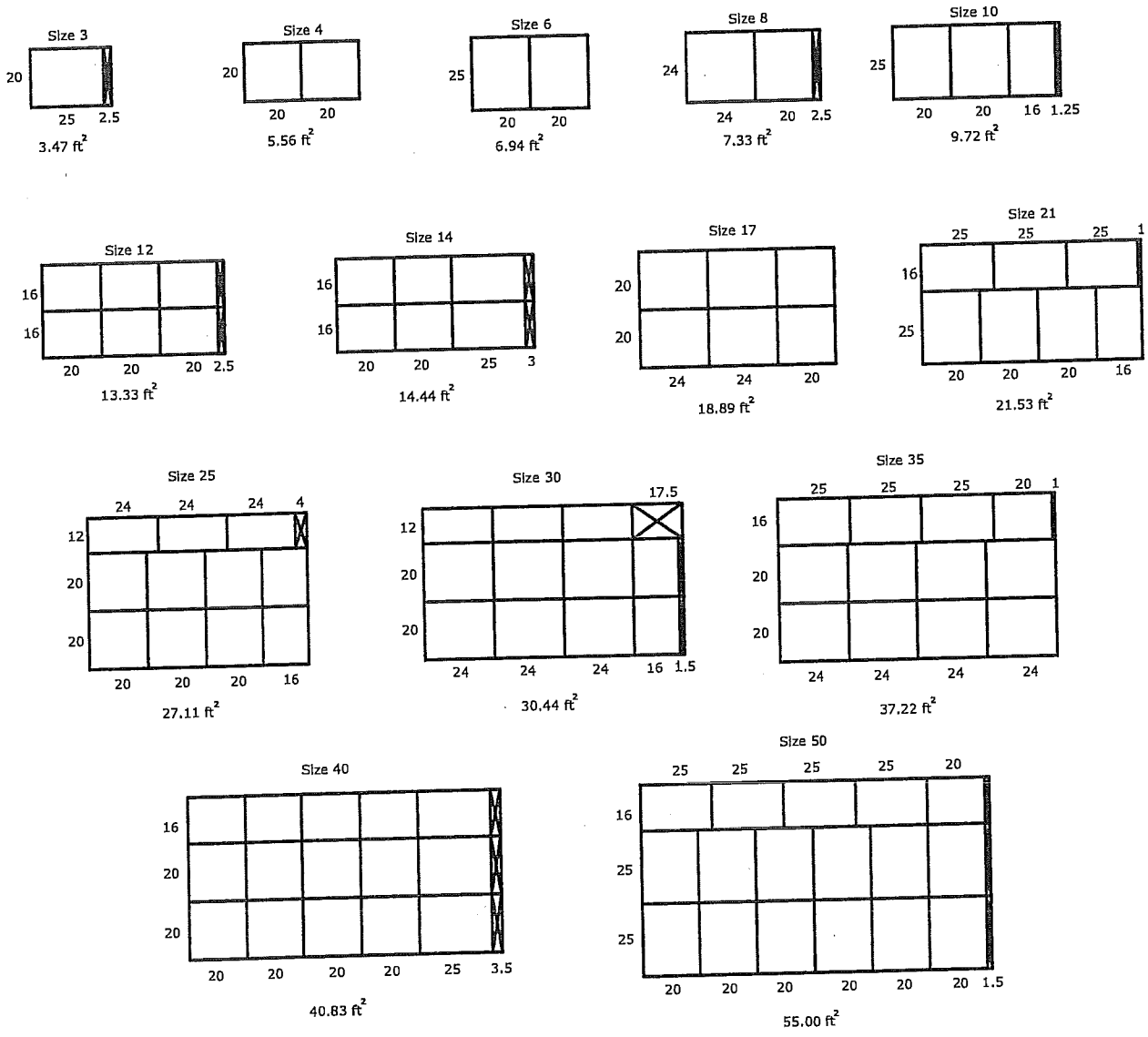

Figure 46. Flat and combination filter placement for unit sizes 57-120

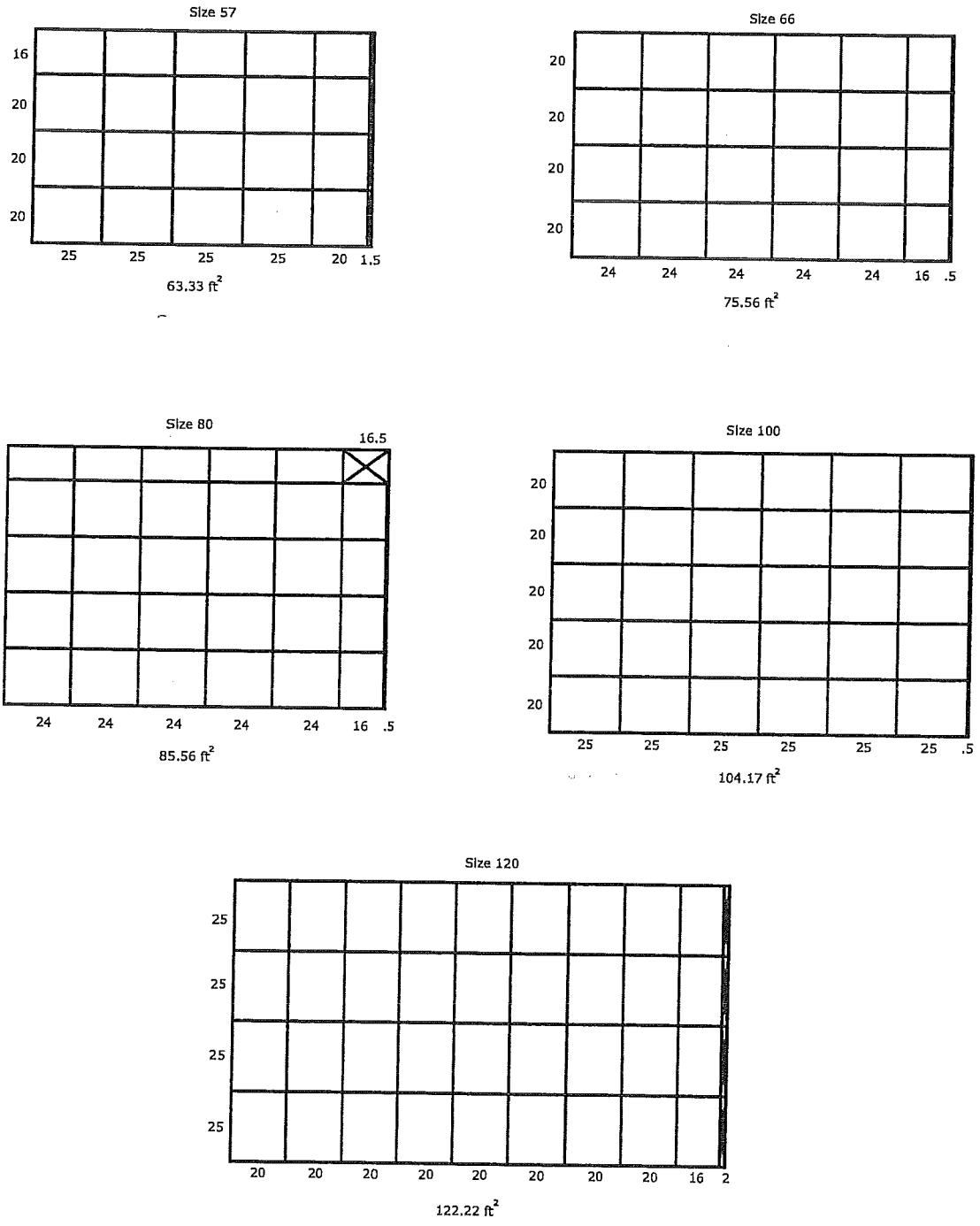

Figure 47. Front-loading bag and cartridge filters sizes 3-50

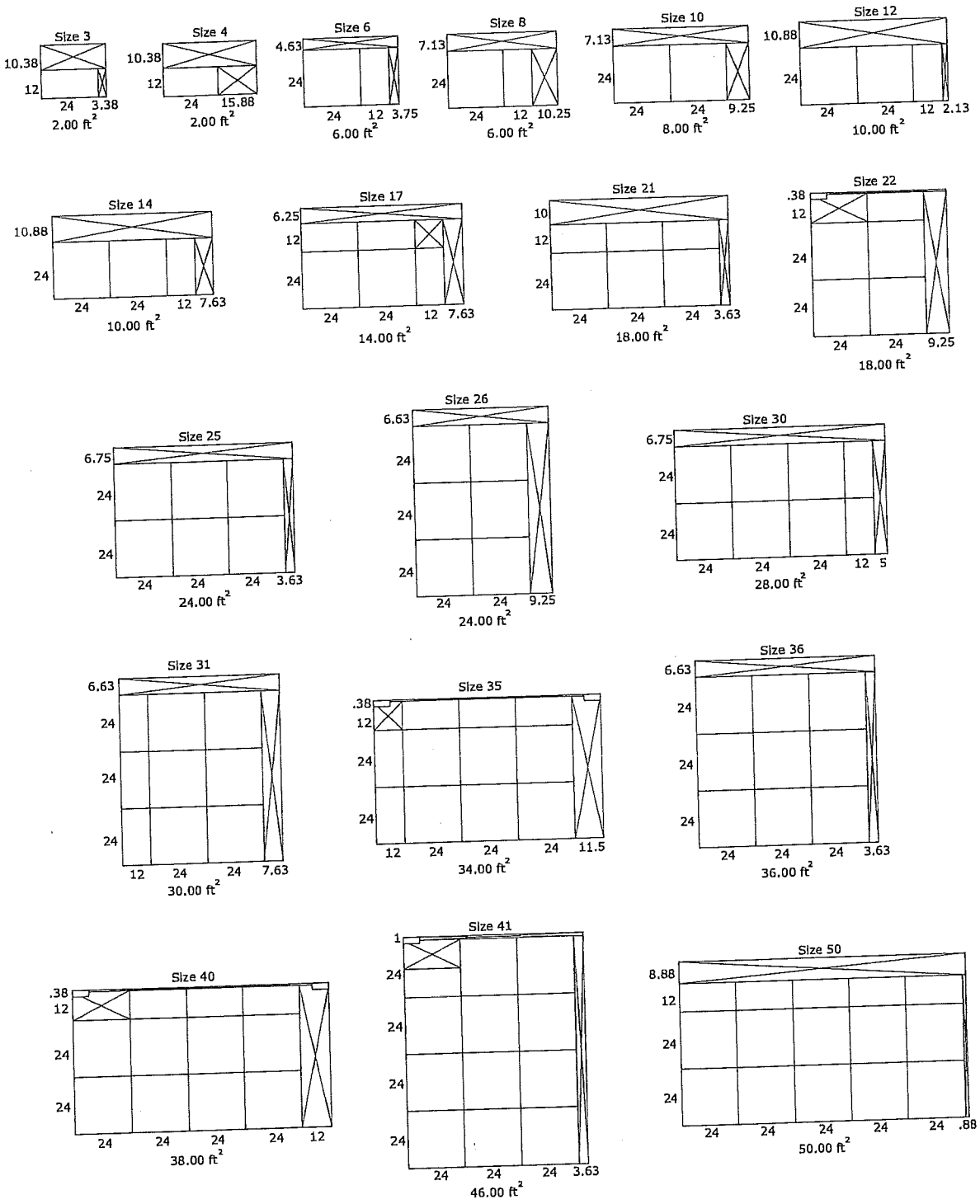

Figure 48. Front-loading bag and cartridge filters sizes 57-120

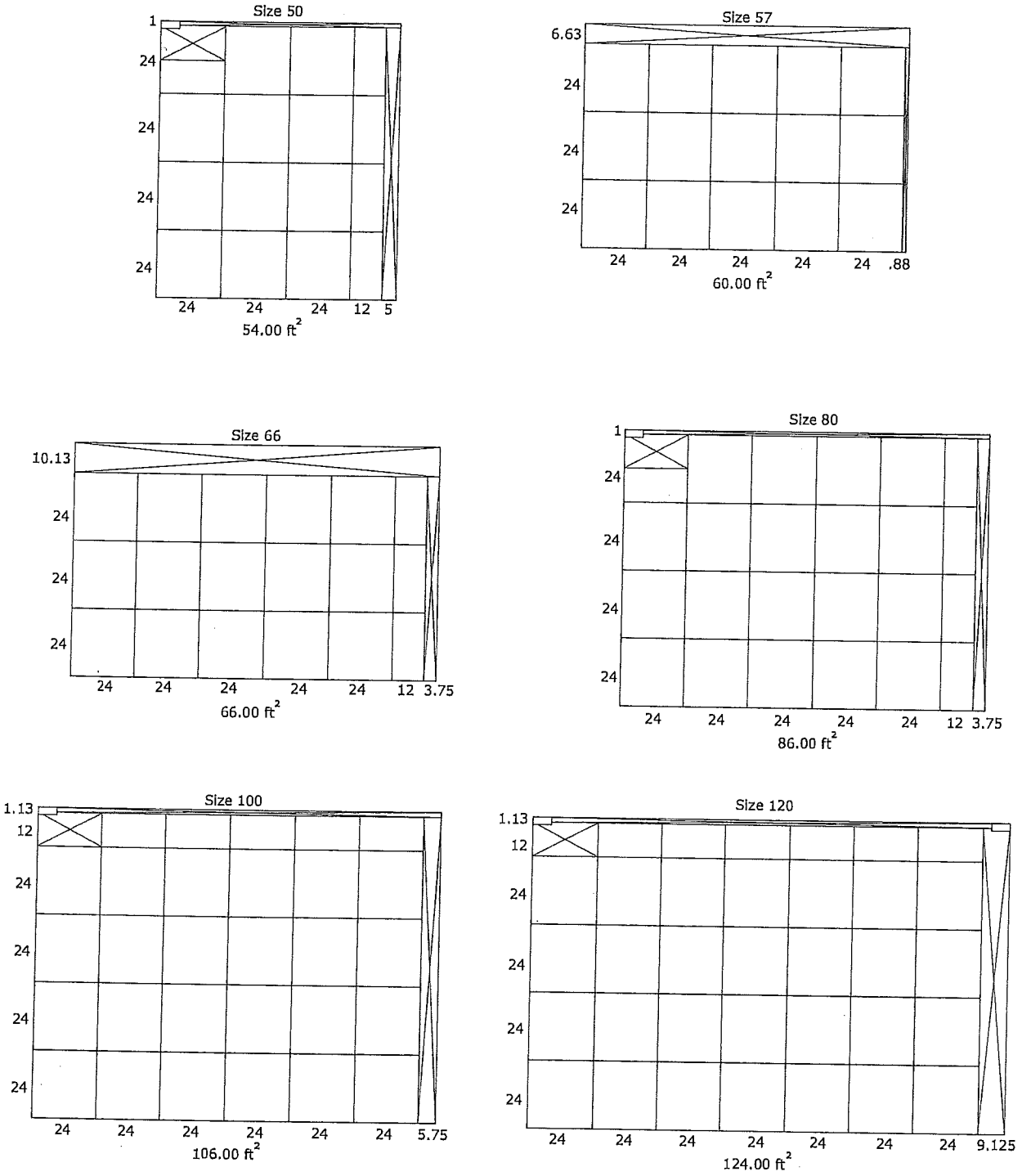

Figure 49. Front-loading HEPA filters sizes 3-50

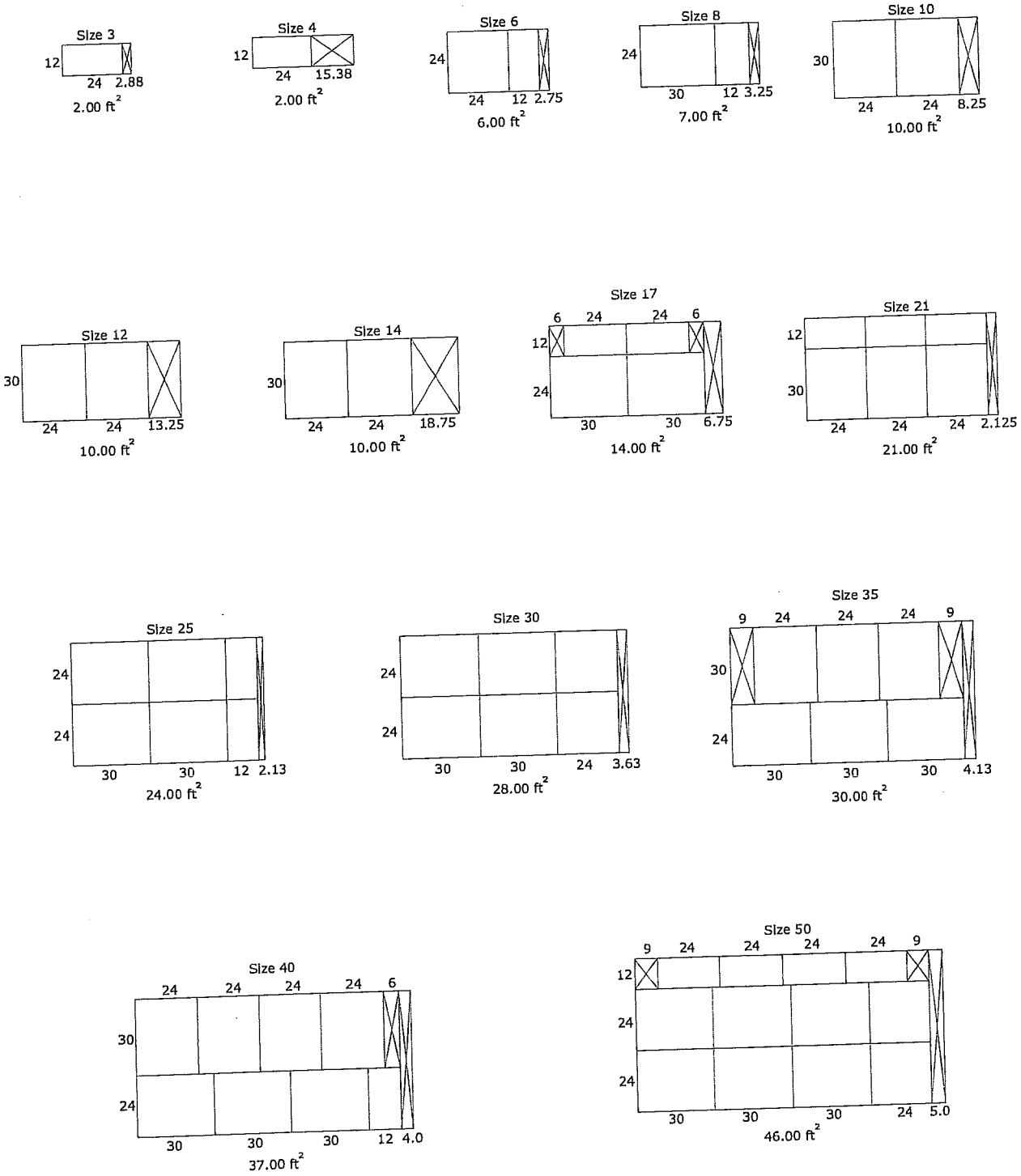

Figure 50. Front-loading HEPA filters sizes 57-120

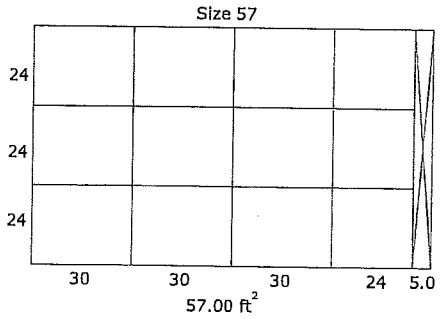

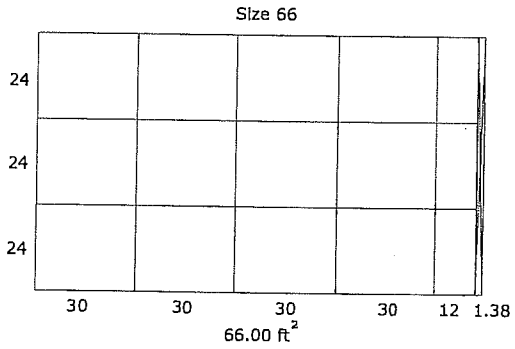

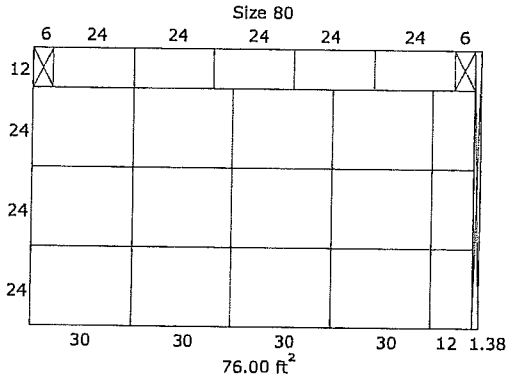

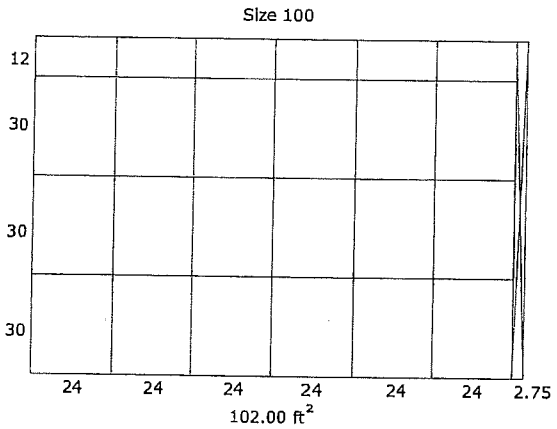

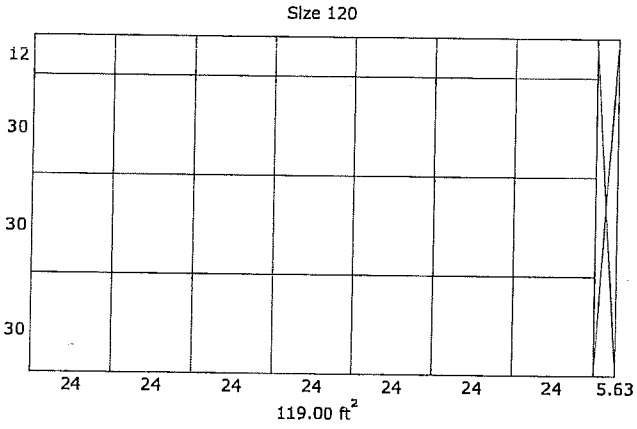

Fan Sections

The fan section can be configured as either draw-thru or blow-thru. Review the submittals and unit tagging information prior to assembly to determine placement.

Fan Isolation

The fan-and-motor assembly is internally isolated. The fan and motor bases are bolted to a minimum of four spring isolators. The isolators are secured to the fan section support base.

Shipping tie-down bolts are bolted adjacent to the isolators between the fan isolation base and the isolator support frame. The shipping tie-downs secure the isolation base to the support assembly to prevent any damage to the fan section during shipment.

Note: *Remove the tie-downs **only** if the factory-provided isolation is to be used.*

Adjusting the Isolators

Note: *For additional information regarding the safe discharge of capacitors, see PROD-SVB06A-EN.*

Once the shipping tie-downs are removed and the internal isolation is released, it may be necessary to adjust the isolators to achieve the proper operation height of the fan and motor isolation base.

Minimum required clearances are listed in Table 9. To determine the isolator clearances on all unit sizes, measure between the top of the cabinet channel and the bottom of the isolation base channel. See Figure 51, Figure 52, Figure 53, and Figure 54.

Table 9. Minimum isolator clearances (inches)

Unit Size	Fan Type	Required Clearance
3-8	FC, BC, Plenum	1.0
10-30	FC, AF, Plenum	0.5
35-57	FC, AF, Plenum	0.5
66-120	FC, AF, Plenum	1.0

Figure 51. Isolator tie-down removal for unit sizes 3-8

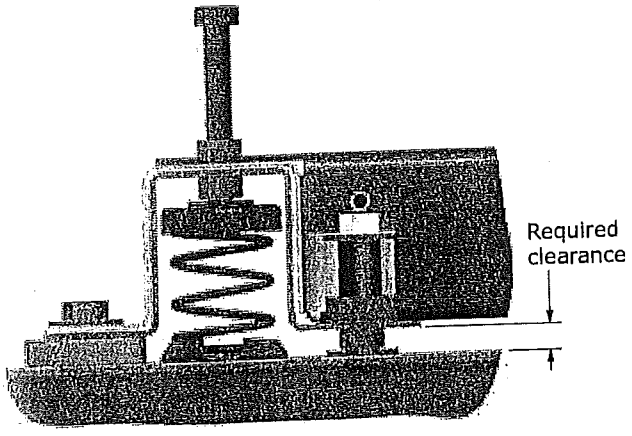

Figure 52. Isolator tie-down removal for unit sizes 10-30

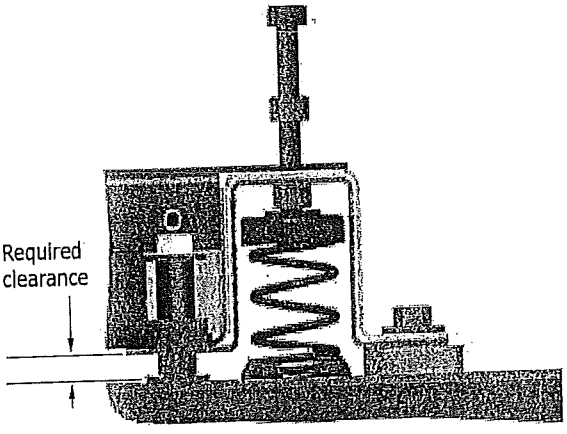

Figure 53. Isolator tie-down removal for unit sizes 66-120

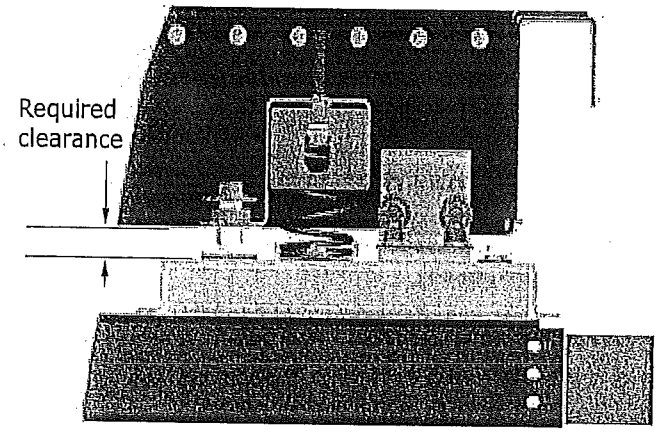

Figure 54. Belt-drive plenum fan tie down

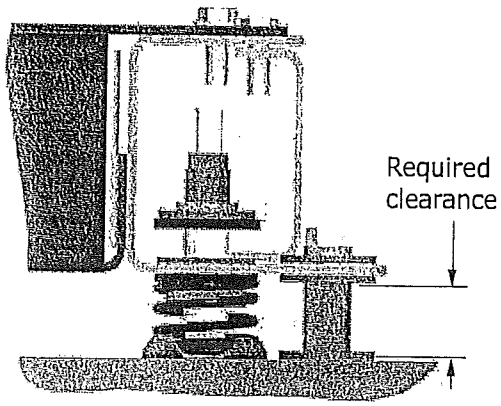

Seismic Isolation Requirements

Air handling equipment manufactured by Trane is capable of structurally and operationally withstanding the seismic response criteria as required by the International Building Codes (IBC) 2000,2003, 2006, 2009. Trane has third-party certification for IBC compliance for seismic applications for unit sizes 3-30. Certification for larger sizes is in process.

Note: *If seismic isolation has been specified, the following requirements must be adhered to for installation. Failure to follow these instruction would void the warranty.*

Anchor Requirements

Single Level Design Break

Size 3-30 - Grade to Roof Mounted (0<=Sds<=1.85) Non-Isolated

4000 psi concrete

- 3/8-inch diameter Hilti Kwik Bolt TZ carbon steel concrete anchors attached to unit base rails.
- Quantity (2) anchors at AHU ends, (quantity (1) at each side)
- Quantity (2) anchors at AHU unit splits, quantity (1) at each side, staggered.
- 2-inch minimum anchor embedment
- 4-3/8-inch minimum distance to the nearest edge
- 4-inch minimum concrete slab thickness

Steel dunnage/steel curb

3/8-inch diameter ASTM A325 or SAE grade 5 bolts attached to unit base located as noted above **or** 1-inch long 3/16-inch welds at unit base located as noted above.

Stacked Design Break

Size 3-30 – Grade to Roof Mounted (0<=Sds<=1.85) Non-Isolated

4000 psi concrete

- 1/2-inch diameter Hilti Kwik Bolt TZ carbon steel concrete anchors attached to unit base rails.
- Quantity (2) anchors at AHU ends (quantity (1) at each side).
- Quantity (2) anchors at AHU unit splits, (quantity (1) at each side, staggered).
- 3 1/4-inch minimum anchor embedment

- 7 1/2-inch minimum distance to the nearest edge
- 6-inch minimum concrete slab thickness

Steel dunnage/steel curb

1/2-inch diameter ASTM A325 or SAE Grade 5 bolts attached to unit base located as noted above **or** 1-inch long 3/16-inch welds at unit bases located as noted above.

Anchor Pattern

Figure 55. Seismic anchor pattern

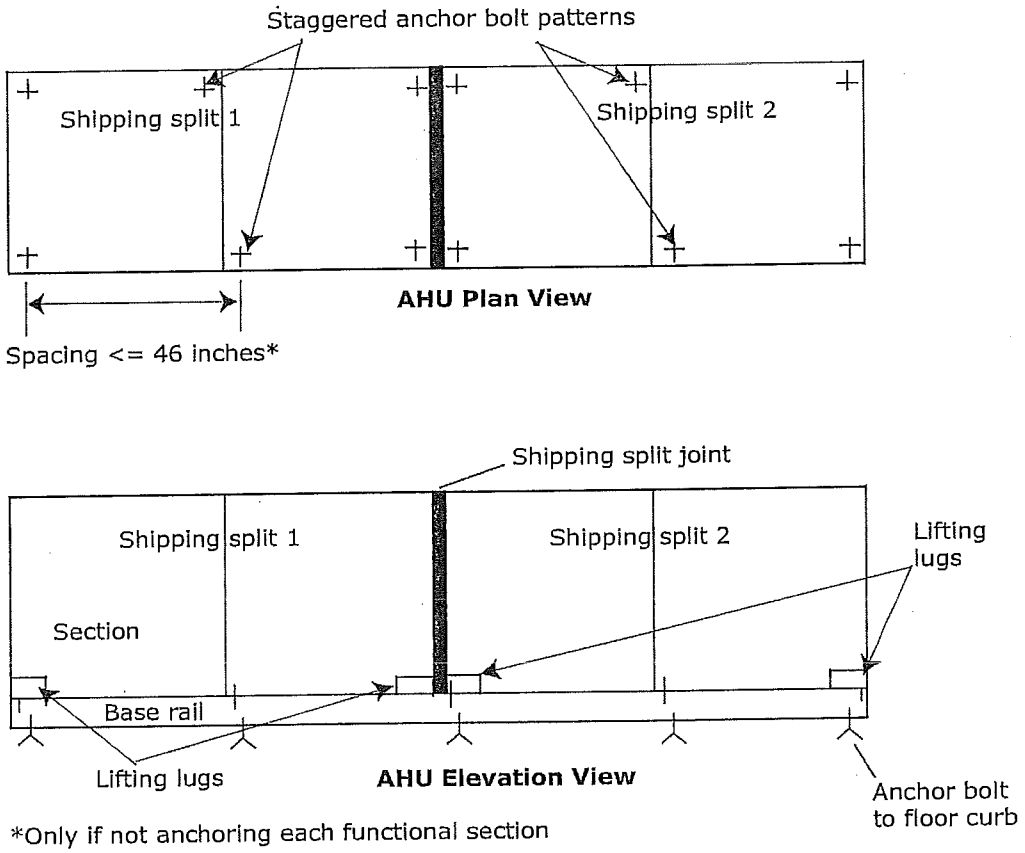

*Only if not anchoring each functional section

Each module is considered a functional section; for example, fan section, coil section, access section, etc. Anchoring of the unit needs to be placed at the designated locations according to the anchoring pattern for each functional section (see Figure 55).

If anchoring each functional section is difficult, then spacing between each anchor can be no longer than 46 inches.

Lifting lugs can be used as locations for anchoring the unit. For locations that do not have lifting lugs, additional anchors need to be installed at the construction site.

Anchor selection meets or exceeds IBC 2000, 2003, 2006 and 2009 compliance requirements.

Special Inspection per IBC Section 1704 is required on all installations. All anchors listed above must be installed to meet compliance.

Damper Sections

Dampers are factory-installed and adjusted and can be found in mixing box/economizer sections. There are two damper blade configurations available: parallel-blade and opposed-blade.

Traq™ dampers are another type of damper available in mixing box sections. Traq dampers have only one blade configuration - opposed. They have two control applications available - standard Traq dampers and low-flow Traq dampers. Low-flow Traq dampers are always not linked and consist of two damper sets - one set for minimum outside air measurement and one set for economizing. Each will have its own VCM.

The air handler is available with factory-mounted controls or end devices. If the unit is not ordered with controls or end devices, it is the installer's responsibility to provide and install the damper actuators. Size the actuators according to Table 10.

Damper Torque Requirements

Table 10. Mixing box damper torque requirements (inch pound) at 1-inch w.g. air pressure drop

Unit Size	Parallel airfoil damper only	Opposed airfoil damper only	Standard Traq damper only	Low-flow minimum OA Traq damper only	Low-flow econ Traq damper only	Parallel airfoil damper linked to parallel airfoil damper	Opposed airfoil damper linked to opposed airfoil damper	Standard Traq linked to airfoil damper	Standard Traq linked to standard Traq damper
3	9.00	6.40	18.00	n/a	n/a	10.30	7.70	19.30	36.00
4	13.10	9.30	36.00	18.00	18.00	14.90	11.20	37.90	72.00
6	17.10	12.20	36.00	18.00	18.00	19.60	14.70	38.40	72.00
8	23.30	16.60	54.00	18.00	36.00	26.60	19.90	57.30	108.00
10	29.00	20.70	54.00	18.00	36.00	33.20	24.90	58.10	108.00
12	35.70	25.50	67.50	22.50	45.00	40.70	30.60	72.60	135.00
14	39.50	28.20	67.50	22.50	45.00	45.20	33.90	73.10	135.00
17	48.90	34.90	67.50	22.50	45.00	55.90	41.90	74.50	135.00
21	60.40	43.10	99.00	33.00	66.00	69.00	51.80	107.60	198.00
25	72.40	51.70	99.00	33.00	66.00	82.80	62.10	109.30	198.00
30	84.20	60.10	108.00	36.00	72.00	96.20	72.20	120.00	216.00
35	100.20	71.50	108.00	36.00	72.00	114.50	85.90	122.30	198.00
40	110.20	78.70	108.00	36.00	72.00	125.90	94.50	119.60	198.00
50	126.30	90.20	112.50	37.50	75.00	144.30	108.20	135.70	216.00
57	154.80	110.60	112.50	37.50	75.00	176.90	132.70	164.20	198.00
66	177.60	126.80	150.00	37.50	75.00	202.90	152.20	187.00	264.00
80	210.30	150.20	187.50	37.50	112.50	240.30	180.20	223.10	360.00
100	272.00	194.30	225.00	37.50	150.00	310.90	233.20	284.90	396.00
120	322.40	230.30	225.00	37.50	150.00	368.50	276.30	335.20	432.00

Table 11. Side Traq damper - standard flow mixing box

Unit size	Damper dia (in)	Damper qty	Damper torque (in-lb)	Total torque (in-lb)	Actuator torque (max) (in-lb)	Actuator qty	Face-to-face linkage	Linkage on face
3	13.00	1	18.00	18.00	42	1	No	No
4	13.00	1	18.00	18.00	42	1	No	No
6	13.00	1	18.00	18.00	42	1	No	No
8	13.00	1	18.00	18.00	42	1	No	No
10	16.00	1	22.50	22.50	42	1	No	No
12	16.00	1	22.50	22.50	42	1	No	No
14	13.00	2	18.00	36.00	42	1	No	Yes
17	13.00	2	18.00	36.00	42	1	No	Yes
21	16.00	2	22.50	45.00	160	1	No	Yes
25	16.00	2	22.50	45.00	160	1	No	Yes
30	20.00	2	33.00	66.00	160	1	No	Yes
35	20.00	2	33.00	66.00	160	1	No	Yes
40	20.00	2	33.00	66.00	160	1	No	Yes
50	24.00	2	36.00	72.00	160	1	No	Yes
57	24.00	2	36.00	72.00	160	1	No	Yes
66	24.00	2	36.00	72.00	160	1	No	Yes
80	28.00	2	37.50	75.00	160	1	No	Yes
100	28.00	3	37.50	112.50	160	1	No	Yes
120	24.00	4	36.00	144.00	160	1	No	Yes

Table 12. Side Traq damper - standard flow diagonal economizer

Unit sizes	Damper dia (in)	Damper qty	Damper torque (in-lb)	Total torque (in-lb)	Actuator torque (max) (in-lb)	Actuator qty	Face-to-face linkage	Linkage on face
3	13.00	1	18.0	18.0	42	1	No	No
4	13.00	2	18.0	36.0	42	2	No	No
6	13.00	2	18.0	36.0	42	1	No	Yes
8	13.00	2	18.0	36.0	42	1	No	Yes
10	16.00	2	22.5	45.0	160	1	No	Yes
12	16.00	2	22.5	45.0	160	1	No	Yes
14	16.00	2	22.5	45.0	160	1	No	Yes
17	13.00	4	18.0	72.0	160	1	No	Yes
21	20.00	2	33.0	66.0	160	1	No	Yes
25	16.00	4	22.5	90.0	160	1	No	Yes
30	20.00	3	33.0	99.0	160	1	No	Yes
35	28.00	2	37.5	75.0	160	2	No	No
40	28.00	2	37.5	75.0	160	1	No	Yes
50	24.00	3	36.0	108.0	160	1	No	Yes
57	24.00	4	36.0	144.0	160	1	No	Yes
66	28.00	3	37.5	112.5	160	1	No	Yes
80	28.00	4	37.5	150.0	160	1	No	Yes
100	28.00	5	37.5	187.5	160	2	No	Yes
120	28.00	5	37.5	187.5	160	2	No	Yes

Table 13. Single -Side Traq low flow mixing box

Unit size	Damper Dia (in)	Damper Qty	Damper Torque (in-lb)	Low flow Traq Torque (in-lb)	Remained Traq Torque (in-lb.)	Actuator qty for low flow Traq	Actuator qty for remained damper	Actuator total Qty	Face-to-face Linkage	Linkage on Face
14	13.00	2	18.0	18.00	18.00	1	1	2	No	No
17	13.00	2	18.0	18.00	18.00	1	1	2	No	No
21	16.00	2	22.5	22.50	22.50	1	1	2	No	No
25	16.00	2	22.5	22.50	22.50	1	1	2	No	No
30	20.00	2	33.0	33.00	33.00	1	1	2	No	No
35	20.00	2	33.0	33.00	33.00	1	1	2	No	No
40	20.00	2	33.0	33.00	33.00	1	1	2	No	No
50	24.00	2	36.0	36.00	36.00	1	1	2	No	No
57	24.00	2	36.0	36.00	36.00	1	1	2	No	No
66	24.00	2	36.0	36.00	36.00	1	1	2	No	No
80	28.00	2	37.5	37.50	37.50	1	1	2	No	No
100	28.00	3	37.5	37.50	75.00	1	1	2	No	Yes
120	24.00	4	36.0	36.00	108.00	1	1	2	No	Yes

Table 14. Dual-side Traq low flow mixing box

Unit size	Damper dia (in)	Damper qty	Damper torque (in-lb.)	Low-flow Traq torque (in-lb)	Remained Traq torque (in-lb.)	Actuator qty for low-flow Traq	Actuator qty for remained damper	Actuator total qty	Face-to-face linkage	Linkage on face
3	13.00	2	18.00	18.00	18.00	1	1	2	No	No
4	13.00	2	18.00	18.00	18.00	1	1	2	No	No
6	13.00	2	18.00	18.00	18.00	1	1	2	No	No
8	13.00	2	18.00	18.00	18.00	1	1	2	No	No
10	16.00	2	22.50	22.50	22.50	1	1	2	No	No
12	16.00	2	22.50	22.50	22.50	1	1	2	No	No
14	13.00	4	18.00	18.00	54.00	1	2	3	No	No
17	13.00	4	18.00	18.00	54.00	1	2	3	No	No
21	16.00	4	22.50	22.50	67.50	1	2	3	No	No
25	16.00	4	22.50	22.50	67.50	1	2	3	No	No
30	20.00	4	33.00	33.00	99.00	1	2	3	No	No
35	20.00	4	33.00	33.00	99.00	1	2	3	No	No
40	20.00	4	33.00	33.00	99.00	1	2	3	No	No
50	24.00	4	36.00	36.00	108.00	1	2	3	No	No
57	24.00	4	36.00	36.00	108.00	1	2	3	No	No
66	24.00	4	36.00	36.00	108.00	1	2	3	No	No
80	28.00	4	37.50	37.50	112.50	1	2	3	No	No
100	28.00	6	37.5	37.5	187.5	1	2	3	No	Yes
120	24.00	8	36.0	36.0	252.0	1	2	3	No	Yes

Table 15. Side Traq Low-Flow Diagonal Economizer

Unit size	Damper dia (in)	Damper qty	Damper torque (in-lb)	Low flow Traq torque (in-lb)	Remainder Traq torque (in-lb)	Actuator qty for low flow Traq	Actuator qty for remainder damper	Actuator face to face total qty	Linkage	Linkage on face
4	13.00	2	18.0	18.00	18.00	1	1	2	No	No
6	13.00	2	18.0	18.00	18.00	1	1	2	No	No
8	13.00	2	18.0	18.00	18.00	1	1	2	No	No
10	16.00	2	22.5	22.50	22.50	1	1	2	No	No
12	16.00	2	22.5	22.50	22.50	1	1	2	No	No
14	16.00	2	22.5	22.50	22.50	1	1	2	No	No
17	13.00	4	18.0	18.00	54.00	1	1	2	No	Yes
21	20.00	2	33.0	33.00	33.00	1	1	2	No	No
25	16.00	4	22.5	22.50	67.50	1	1	2	No	Yes
30	20.00	3	33.0	33.00	66.00	1	1	2	No	Yes
35	28.00	2	37.5	37.50	37.50	1	1	2	No	No
40	28.00	2	37.5	37.50	37.50	1	1	2	No	No
50	24.00	3	36.0	36.00	72.00	1	1	2	No	Yes
57	24.00	4	36.0	36.00	108.00	1	1	2	No	Yes
66	28.00	3	37.5	37.50	75.00	1	1	2	No	Yes
80	28.00	4	37.5	37.50	112.50	1	1	2	No	Yes
100	28.00	5	37.5	37.50	150.00	1	1	2	No	Yes
120	28.00	5	37.5	37.50	150.00	1	1	2	No	Yes

Table 16. Side rectangle angle damper - 2000 fpm

Unit size	A (in)	B (in)	Damper qty	Torque (in-lb)	Actuator torque (max) (in-lb)	Actuator qty	Linkage
3	11.25	13.97	1	13.1	42	1	No
4	11.25	13.97	1	13.1	42	1	No
6	15.75	13.97	1	18.3	42	1	No
8	20.25	13.97	1	23.6	42	1	No
10	20.25	16.30	1	27.5	42	1	No
12	27.00	16.30	1	36.7	42	1	No
14	23.25	19.72	1	38.2	42	1	No
17	30.50	19.72	1	50.1	160	1	No
21	36.75	19.72	1	60.4	160	1	No
25	45.75	19.72	1	75.2	160	1	No
30	48.50	20.22	1	81.7	160	1	No
35	45.50	25.47	1	96.6	160	1	No
40	48.00	28.35	1	113.4	160	1	No
50	56.75	31.22	1	147.6	160	1	No
57	65.75	31.22	1	171.1	160	2	No
66	70.50	31.22	1	183.4	160	2	No
80	85.00	31.22	1	221.1	160	2	No
100	95.00	36.97	1	292.7	160	2	No
120	96.00	42.72	1	341.8	160	3	No

Table 17. Side Rectangle damper per 1200 fpm - Diagonal Economizer with OA rectangle dampers

Unit size	A (in)	B (in)	Damper qty	Torque (in-lb.)	Actuator torque (max) (in-lb.)	Actuator qty	Linkage
3	12.50	13.97	1	14.60	42	1	No
4	13.75	19.72	1	22.60	42	1	No
6	18.75	19.72	1	30.80	42	1	No
8	24.25	19.72	1	39.90	42	1	No
10	23.50	25.47	1	49.90	160	1	No
12	29.00	25.47	1	61.60	160	1	No
14	26.00	31.22	1	67.60	160	1	No
17	32.00	31.22	1	83.30	160	1	No
21	40.00	31.22	1	104.10	160	1	No
25	48.00	31.22	1	124.90	160	1	No
30	47.00	36.97	1	144.80	160	1	No
35	48.00	42.72	1	170.90	160	2	No
40	48.00	48.47	1	193.90	160	2	No
50	57.75	48.47	1	233.30	160	2	No
57	67.50	48.47	1	272.60	160	2	No
66	69.50	28.35	2	277.10	160	2	Yes
80	83.00	28.35	2	330.90	160	3	Yes
100	95.25	31.22	2	418.20	160	3	Yes
120	95.00	36.97	2	493.90	160	4	Yes

Table 18. Short mixing box rectangle damper - top, back or bottom only

Unit size	A (in)	B (in)	Damper Qty	Torque (in-lb.)	Actuator Torque (max) (in-lb.)	Actuator qty	Linkage
3	13.00	8.22	1	5.2	42	1	No
4	19.75	8.22	1	7.9	42	1	No
6	27.00	8.22	1	10.8	42	1	No
8	35.00	8.22	1	14.0	42	1	No
10	43.75	8.22	1	17.5	160	1	No
12	32.00	13.97	1	21.7	160	1	No
14	60.00	8.22	1	24.0	160	1	No
17	43.50	13.97	1	29.5	160	1	No
21	53.75	13.97	1	36.5	160	1	No
25	64.50	13.97	1	43.8	160	1	No
30	55.00	19.72	1	52.7	160	1	No
35	64.00	19.72	1	61.4	160	1	No
40	56.50	25.47	1	70.0	160	1	No
50	68.00	25.47	1	84.2	160	1	No
57	66.00	31.22	1	100.2	160	1	No
66	58.50	19.72	2	112.2	160	1	No
80	54.25	25.47	2	134.3	160	1	No
100	65.25	25.47	2	161.6	160	2	No
120	66.00	31.22	2	200.3	160	2	No

Table 19. Energy recovery recirculation parallel damper

Unit size	A (in)	B (in)	Damper qty	Torque (in-lb.)	Actuator torque (max) (in-lb.)	Actuator qty	Linkage
3	16.00	13.97	1	10.9	42	1	No
4	28.50	13.97	1	19.4	42	1	No
6	28.50	13.97	1	19.4	42	1	No
8	35.00	13.97	1	23.8	42	1	No
10	46.00	13.97	1	31.2	42	1	No
12	51.00	13.97	1	34.6	42	1	No
14	56.50	13.97	1	38.4	160	1	No
17	56.50	13.97	1	38.4	160	1	No
21	64.50	13.97	1	43.8	160	1	No
25	64.50	13.97	1	43.8	160	1	No
30	78.00	13.97	1	53.0	160	1	No
35	84.50	13.97	1	57.4	160	1	No
40	97.00	13.97	1	65.9	160	1	No
50	110.00	13.97	1	74.7	160	1	No

Table 20. Energy recovery bypass opposed blade damper

Unit size	A (in)	B (in)	Damper qty	Torque in-lb.	Actuator Torque (max) (in-lb.)	Actuator qty	Linkage
3 - 8	18.00	8.22	1	5.10	42	1	No
8 - 14	32.00	8.22	1	9.10	42	1	No
10 - 17	41.75	8.22	1	11.90	42	1	No
12 - 21	53.50	8.22	1	15.30	42	1	No
21 - 50	52.50	13.97	1	25.50	160	1	No
17, 21	61.50	8.22	1	17.60	42	1	No
21 - 30	66.00	8.22	1	18.80	42	1	No
25 - 50	65.00	13.97	1	31.50	160	1	No
21	70.00	8.22	1	20.00	42	1	No
35 - 50	84.50	13.97	1	41.00	160	1	No
35 - 50	75.00	13.97	1	36.40	160	1	No
40 - 50	102.00	13.97	1	49.50	160	1	No
50	113.00	13.97	1	54.80	160	1	No

Table 21. Internal face-and-bypass torque requirements

Unit size	Torque (in-lb.)
3	12.8
4	19.7
6	20.9
8	31.1
10	39.2
12	54.8
14	59.9
17	70.5
21	91.3
25	103.5
30	123.0
35	133.7
40	148.6
50	206.7
57	225.7
66	278.2
80	321.5
100	416.1
120	498.7

Table 22. External face-and-bypass torque requirements

Unit size	Bypass Torque (in-lb.)	Face Torque (in-lb.)
3	8.4	13.8
4	13.6	21.3
6	13.6	27.5
8	16.4	32.5
10	21.0	40.9
12	23.1	54.9
14	25.5	60.1
17	25.5	71.1
21	28.8	92.5
25	28.8	105.0
30	34.5	124.7
35	34.7	133.7
40	35.0	148.6
50	40.4	206.7
57	40.4	225.7
66	85.3	278.2
80	85.3	321.5
100	96.0	416.1
120	117.2	498.7

Mixing section and economizer dampers are designed for the damper actuators to be direct coupled and installed in the air stream. If other provisions are required, modifications to the section will be the responsibility of the installing contractor.

Opposed-Blade and Parallel-Blade Dampers

Opposed-blade and parallel-blade airfoil dampers in unit sizes 3-120 have centered dampers with an internal jack-shaft (see Figure 56). A 95-degree actuator rotation gives a 90-degree blade travel.

Note: *Damper blades should be checked for proper operation from full open to full closed position before unit start up. Damper blade positioning may have changed due to shipping and handling vibrations.*

Figure 56. Typical mixing box configurations for unit sizes 3 to 120

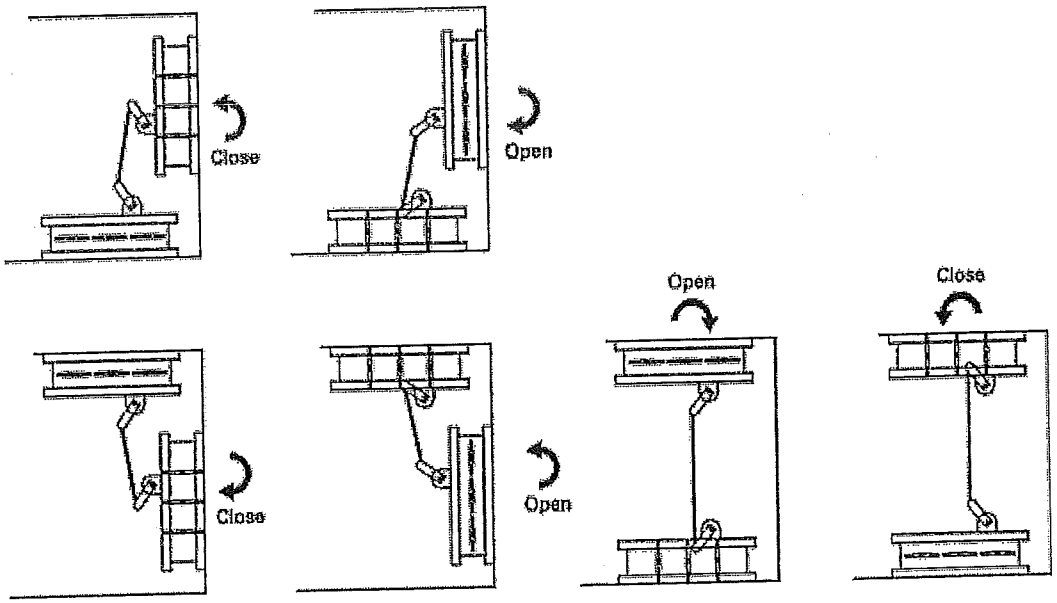

Duct Connections

All duct connections to the air handlers should be installed in accordance with the standards of the National Fire Protection Association (NFPA):

- NFPA 90A for installing air conditioning and ventilating systems other than residence type.
- NFPA 90B for residence-type warm air heating and air-conditioning systems.

Fan Discharge Connections

To ensure the highest fan efficiency, duct turns and transitions must be made carefully, minimizing air friction losses and turbulence. Proper ductwork installation, as outlined by such organizations as SMACNA (Sheet Metal and Air Conditioning Contractors National Association, Inc.), should be followed closely.

Fan sections with rectangular and round openings have a one-inch flange on the discharge that can be used to attach the duct. When using lined ducts, the insulation should not obstruct the discharge opening. For plenum fan sections with bellmouth fittings, see "Bellmouth Discharge Connections" on page 75.

Connections made directly to the discharge opening of a housed fan should have a minimum of three fan diameters of straight duct before any turns or transitions. The ductwork should be the same size as the fan discharge opening. The first turn of the connection should be in the same direction as the fan rotation as shown in Figure 57. The air that the fan discharges into the duct is extremely turbulent and requires some length of duct to stabilize. Abrupt changes in ductwork directly off the fan discharge may adversely affect fan performance and acoustics.

Figure 57. Typical discharge ductwork recommendations

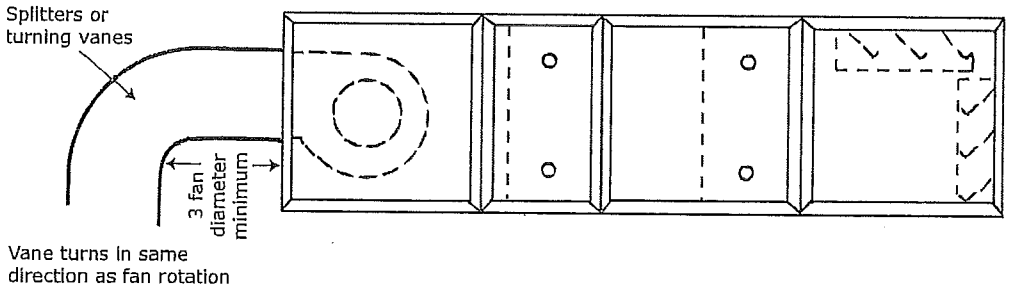

Damper Connections

For standard damper sections, size the attached ductwork to fit the opening of the damper. The duct opening dimensions should be in the unit submittals. Ensure the insulation does not obstruct the damper opening when using a lined duct (see Figure 58 and Figure 59).

Figure 58. Typical section with duct flat/flange connection- uninsulated or externally insulated

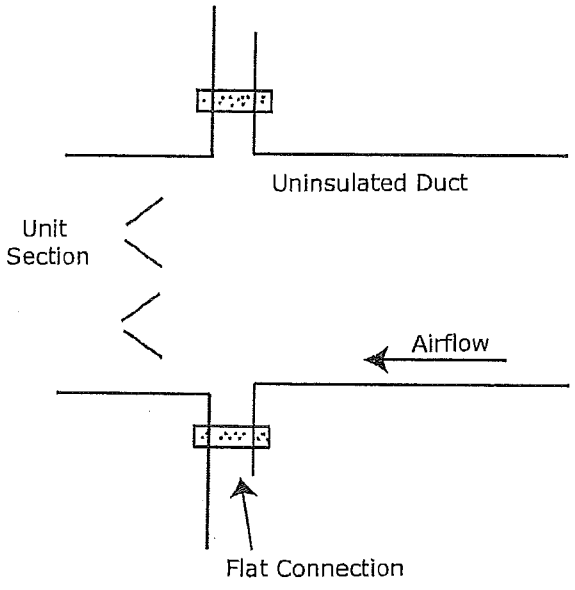

Figure 59. Typical section with duct flat/flange connection- internally insulated

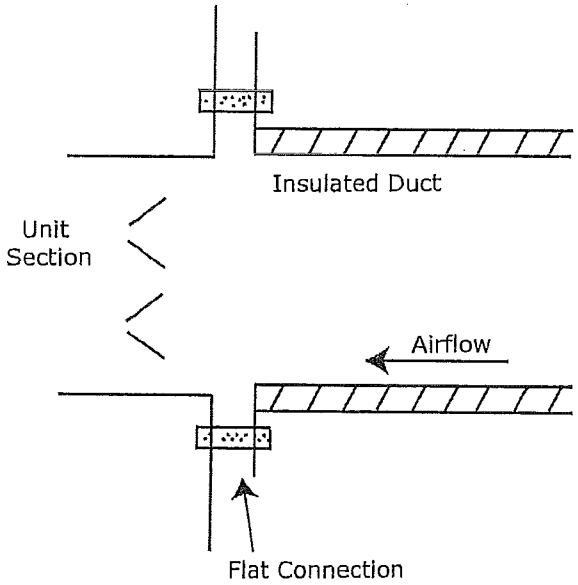

Bottom Opening Duct Installation

1. Install gasket to duct flange to ensure air tight seal.
2. Install duct into place underneath framed opening in unit base per Figure 60. Refer to factory curb layout provided with unit submittals for duct size and location.

Figure 60. Field-supplied duct connection to AHU bottom supply/return air opening

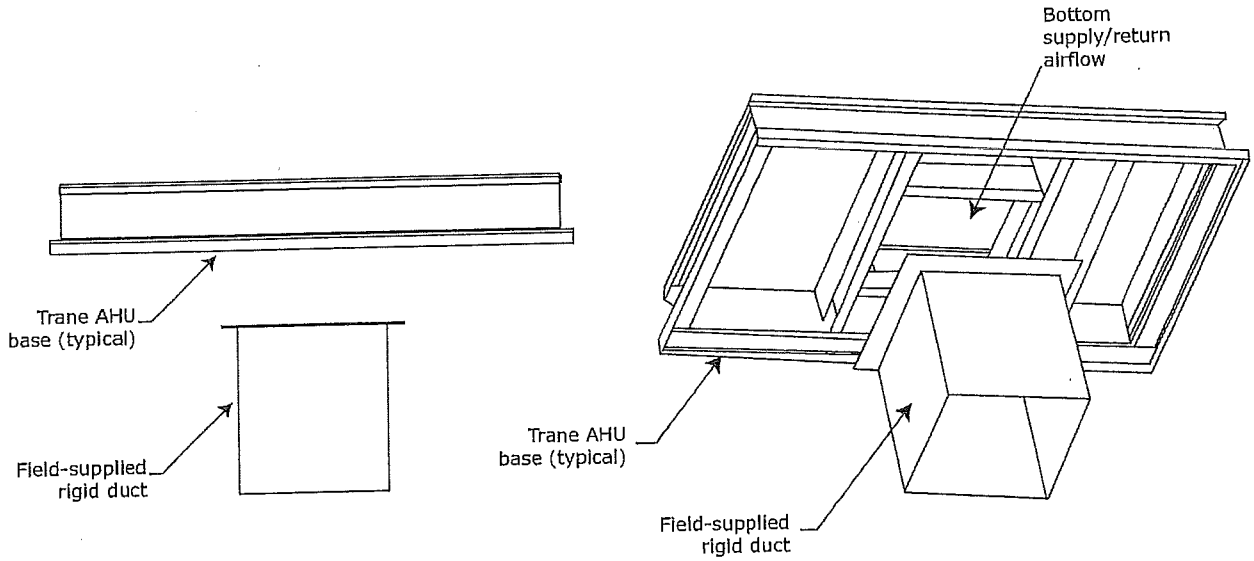

3. Bottom of unit base elevation is flush with duct opening in bottom of unit (see Figure 61 and Figure 62).

Figure 61. Field-supplied duct connection details - curb mount

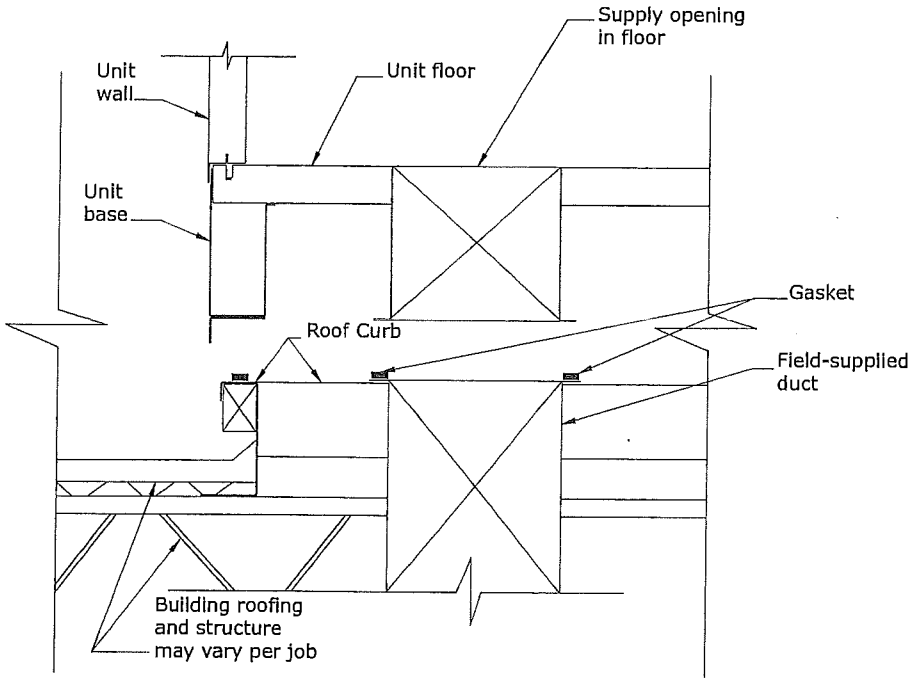

Figure 62. Field-supplied duct connection details - pier mount

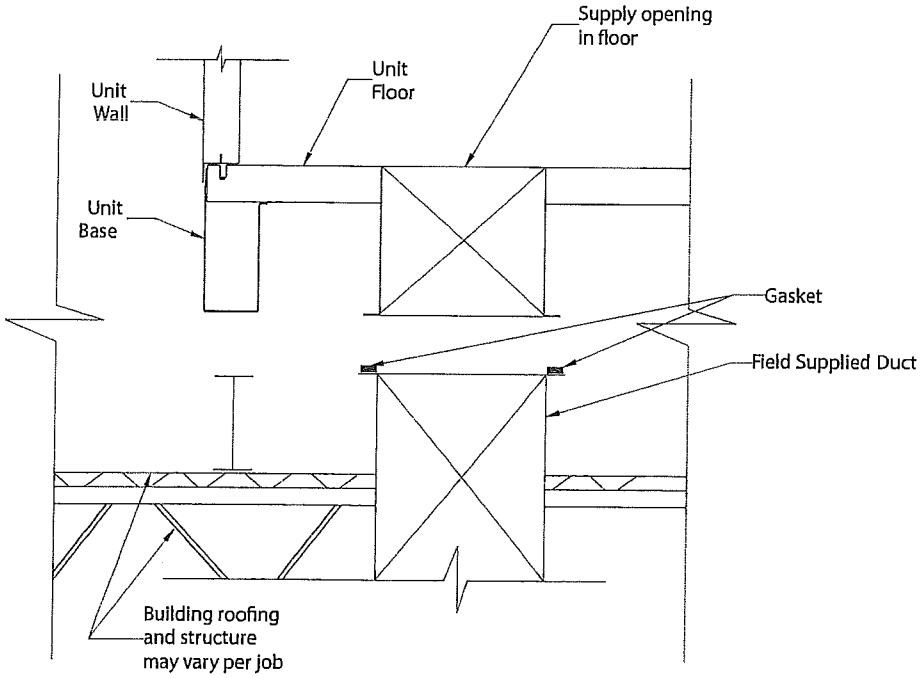

Discharge Plenum Connections

Discharge plenum sections are available with or without openings. Sections with rectangular and round openings have a framed opening that can be used to secure the duct to the frames. If the duct is lined, it is important the insulation does not obstruct the opening of the section.

For a discharge plenum with field-cut openings, attach the duct to the side panel.

Bellmouth Discharge Connections

Round duct connections to be fastened to plenum fan and discharge plenum sections with bellmouth discharge openings should be sized to attach to the casing or directly to the bellmouth fitting. Attachment to the casing requires the round duct diameter to be sized two inches larger than the nominal bellmouth outlet. An angle ring with a flat flange should be affixed to the round duct to secure the duct to the casing (see Figure 63). Attachment to the bellmouth fitting requires the duct and fitting to be insulated by the installing contractor up to the bellmouth radius to prevent condensation (see Figure 64). The bellmouth fitting extends through the casing by one inch.

Figure 63. Securing round duct to casing over bellmouth outlet

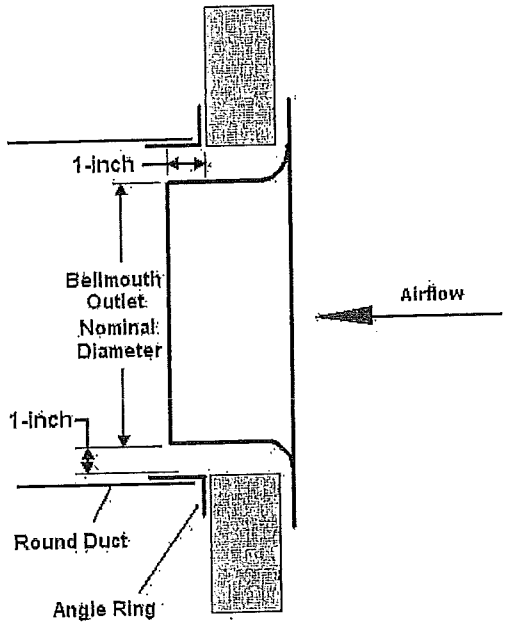

Figure 64. Securing round duct to bellmouth outlet

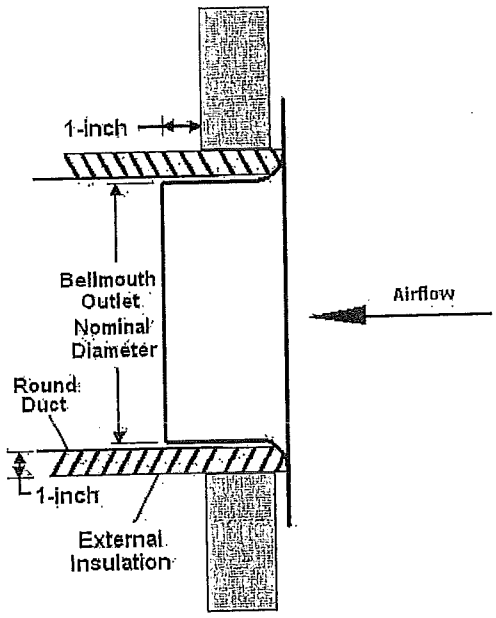

Traq Damper Connections

Size the duct connections to attach to the specified portion on the face of the mixing box that the duct connection completely covers all of the Traq damper.

For a mitered corner, provide one hydraulic duct diameter between the entering face of the Traq dampers and the duct turn. For a radius elbow, or sweep, place the elbow directly against the face of the Traq dampers (see Figure 65).

Figure 65. Traq damper duct connections

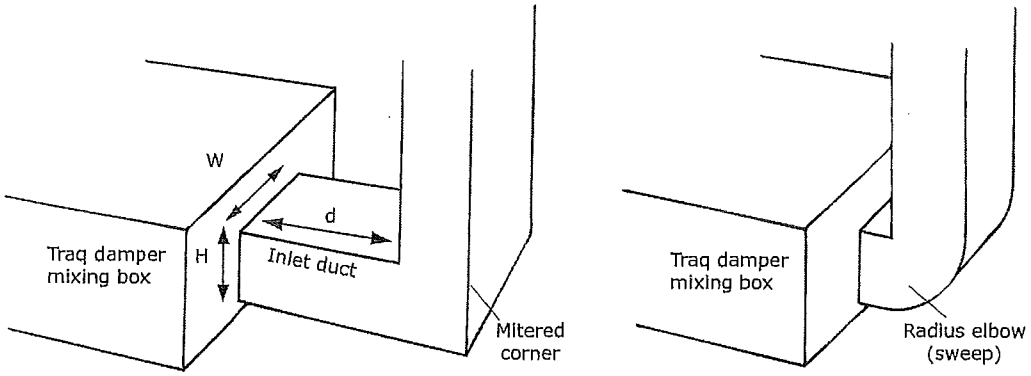

$$d = 1 \text{ hydraulic duct diameter} = \frac{2 \times W \times H}{W + H}$$

External Face-and-Bypass Connections

The external face-and-bypass damper sections will require a field-fabricated duct to direct the bypass air into the appropriate section. Duct sizing recommendations are listed in Table 23.

Table 23. Recommended bypass duct sizes (inches)

Unit size	H	W	L
3	16	20	14
4	18	33	16
6	18	33	16
8	18	39	16
10	18	50	16
12	22	55	20
14	22	61	20
17	22	61	20
21	28	69	26
25	28	69	26
30	28	82	26
35	45	80	36
40	45	93	36
50	45	106	36
57	47	106	40
66	48	121	40
80	56	121	48
100	56	135	48
120	56	162	48

When attaching a bypass duct to a downstream fan section or access section, the section will have a factory-provided opening. (see Figure 66, Figure 67, and Figure 68.)

When bypassing into an access section, remove a panel. It is not necessary to cut an opening.

Figure 66. External face-and-bypass with duct configuration designed to bypass air into a vertical fan section

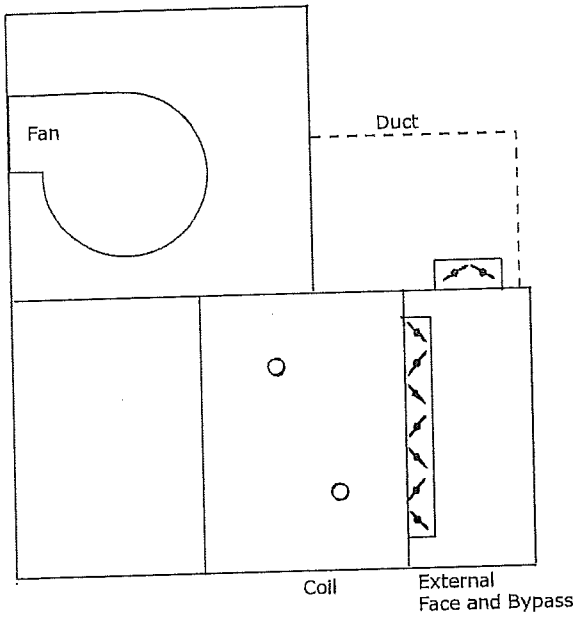

Figure 67. External face-and-bypass with duct configuration designed to bypass air around one coil

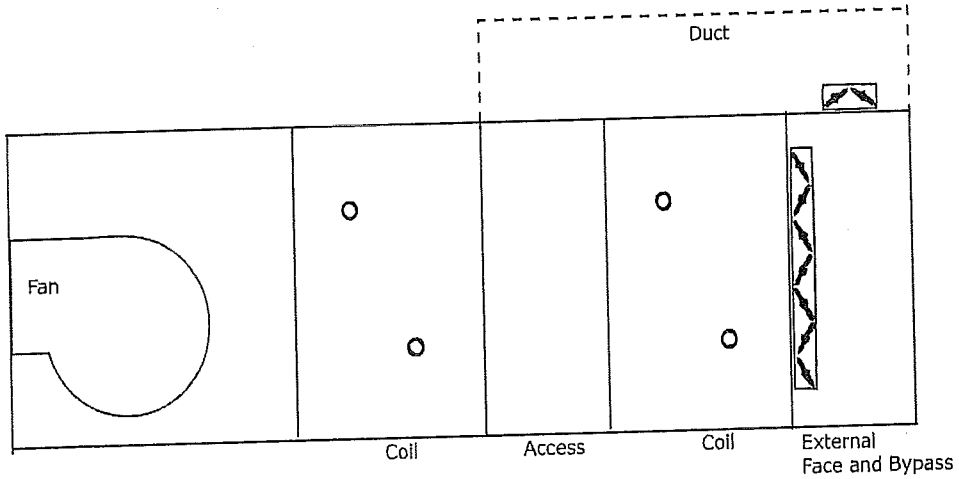

Figure 68. External face-and-bypass with duct configuration designed to bypass air into a horizontal fan section

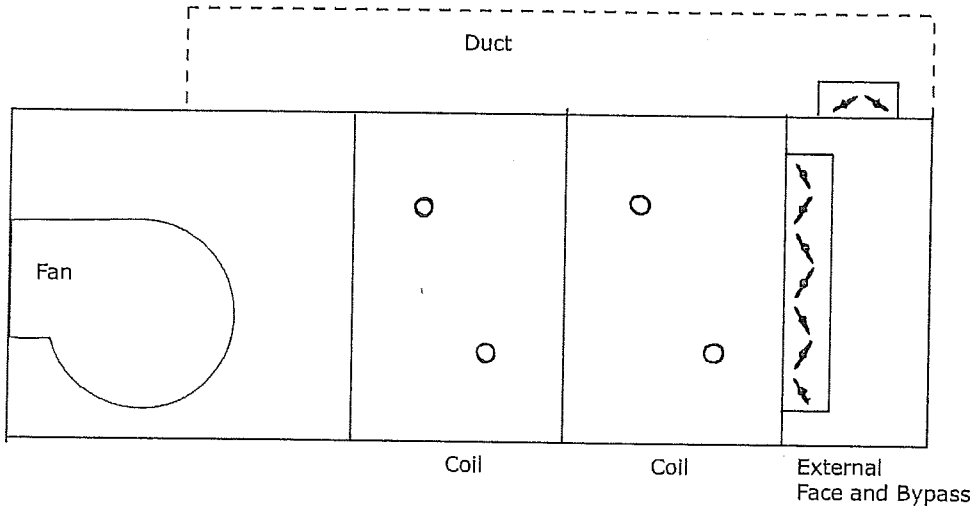

Other Connections

Access, filter, and other sections may have open inlets with a 2-inch (sizes 3-120) panel frame for connecting the ductwork. If the duct is lined, it is important the insulation does not obstruct the opening of the section.

Figure 69. Typical duct flat/flange end of unit connection - uninsulated

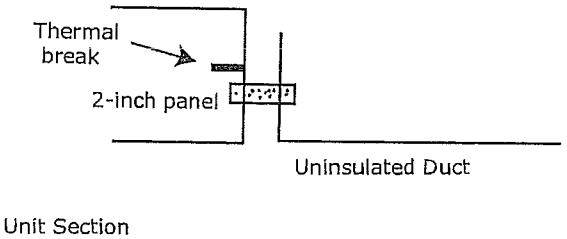

Figure 70. Typical duct flat/flange end of unit connection - insulated

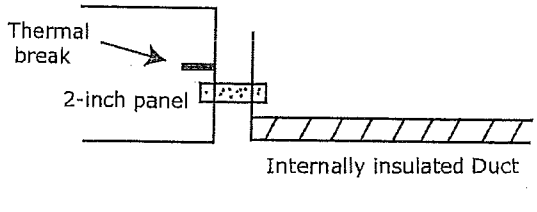

Coil Piping and Connections

General Recommendations

Proper installation, piping, and trapping is necessary to ensure satisfactory coil operation and to prevent operational damage:

- Support all piping independently of the coils.
- Provide swing joints or flexible fittings on all connections that are adjacent to heating coils to absorb thermal expansion and contraction strains.
- If the coil was ordered with factory-mounted controls, install the control valves. The valves ship separately.

Note: *The contractor is responsible for supplying the installation hardware.*

- For best results, use a short pipe nipple on the coil headers prior to making any welded flange or welded elbow type connections.
- Extended drain and vent connections are provided as standard on D1 and D2 coils only. If extended drains and vents are required on other water coils, they must be field-installed or ordered as specials from the factory.
- Pipe coils counterflow to airflow.

NOTICE:
Connection Leaks!

Use a backup wrench when attaching piping to coils with copper headers to prevent damage to the coil header. Do not use brass connectors because they distort easily and could cause connection leaks.

- When attaching the piping to the coil header, make the connection only tight enough to prevent leaks. Maximum recommended torque is 200 foot-pounds.

NOTICE:
Over Tightening!

Do not use teflon-based products for any field connections because their high lubricity could allow connections to be over-tightened, resulting in damage to the coil header.

- Use pipe sealer on all thread connections.

NOTICE:
Leakage!

Properly seal all penetrations in unit casing. Failure to seal penetrations from inner panel to outer panel could result in unconditioned air entering the unit, and water infiltrating the insulation, resulting in equipment damage.

- After completing the piping connections, seal around pipe from inner panel to outer panel.

Drain Pan Trapping

⚠ WARNING

No Step Surface!

Do not walk on the sheet metal drain pan. Walking on the drain pan could cause the supporting metal to collapse. Failure of the drain pan could result in death or serious injury.

Threaded condensate drain connections are provided on only one side of the coil section. Pitch the connection lines horizontal or downward toward an open drain. Trane recommends installing a plug to facilitate cleaning of the trap. The drain connection sizes are:

Unit size	NPT (national pipe thread) external connection
3-30	1-inch
35-57	1 1/4 inch
66-120	1 1/2 inch

Figure 71 illustrates the proper trapping, piping, and operation of the trap. Use the formula under the figure to determine the correct minimum depth for the condensate trap. If a section has a drain pan for cleaning purposes only, it does not need a trap; however, a cap or shutoff valve should be installed on the drain connection. Only sections handling condensate, such as a cooling coil section or moisture eliminator section, require a trap.

NOTICE:

Water Damage!

When more than one section has a drain pain, trap each section individually. Connecting all drains to a common line with only one trap could result in condensate retention and possible water damage to the air handler or adjoining space.

Figure 71. Drain pan trapping for negative and positive pressure applications

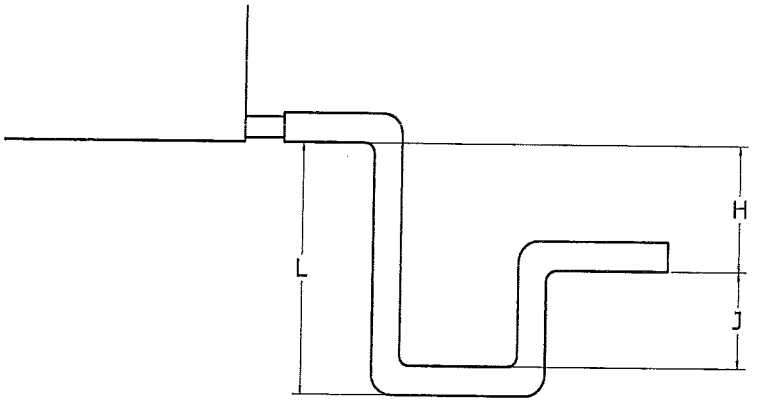

Drain pan trapping for section under negative pressure

L = H + J + pipe diameter where:
H = 1 inch for each inch of negative pressure plus 1 inch
J = 1/2 H

Drain pan trapping for section under positive pressure

L = H + J + pipe diameter where:
H = 1/2 inch (minimum)
J = 1/2 inch plus the unit positive static pressure at coil discharge (loaded filters)

Steam Coil Piping

Air handlers fitted with steam coils have labeled holes for piping penetrations. Figure 72 illustrates a typical steam coil piping configuration. See Table 24 for the codes of system components in these figures.

The coil condensate return line must be piped full size of the condensate trap connection, except for a short nipple screwed directly into the coil header's condensate return tapping. Do not bush or reduce the coil return trapping size.

Table 24. Code of system components for piping figures

Code	System component
FT	Float and thermostatic steam trap
GV	Gate valve
OV	Automatic two-position (ON-OFF) control valve
VB	Vacuum breaker
ST	Strainer
AV	Automatic or manual air vent
MV	Modulating control valve

Figure 72. Typical piping for Type NS steam coils and horizontal tubes for horizontal airflow

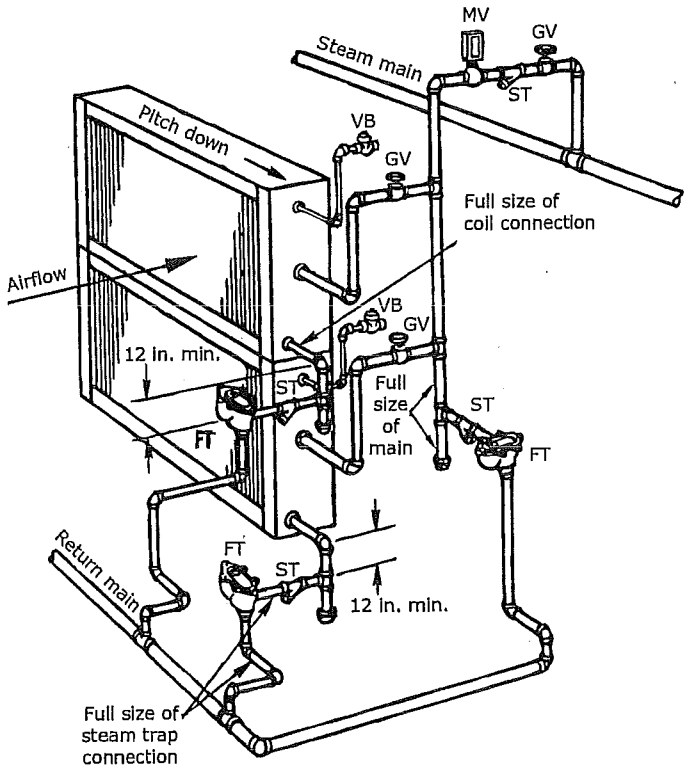

NOTICE:
Vacuum Breaker Cracking Pressure!

The 1/2-inch NPT, 15 degree swing check valve vacuum breaker is recommended because other vacuum breakers, such as spring-loaded ball-check breakers, have cracking pressures as high as 1.25 inches Hg (17 inches of water). Vacuum breakers with fitting sizes smaller than 1/2 inch NPT are too small to relieve vacuum quick enough to ensure complete condensate drainage. Other types of swing check valve vacuum breakers are acceptable if the fittings size is not smaller than 1/2-inch NPT and the cracking pressure is not larger than 0.25 inches Hg (3.4 inches of water). Failure to follow these instructions could result in equipment damage.

To prevent coil damage, complete the following recommendations:

- Install a 1/2-inch NPT, 15 degree swing check valve vacuum breaker with cracking pressure of 0.25 inches Hg (3.4 inches water) or lower at the top of the coil. This vacuum breaker should be installed as close to the coil as possible.
- For coil type NS, install the vacuum breaker in the unused condensate return tapping at the top of the coil.
- Vent the vacuum breaker line to atmosphere or connect it into the return main at the discharge side of the steam trap

Note: *Vacuum breaker relief is mandatory when the coil is controlled by a modulating steam supply or automatic two position (ON-OFF) steam supply valve. Vacuum breaker relief is also recommended when face-and-bypass control is used.*

NOTICE:
Coil Condensate!

Condensate must flow freely from the coil at all times to prevent coil damage from water hammer, unequal thermal stresses, freeze-up and/or corrosion. In all steam coil installations, the condensate return connections must be at the low point of the coil. Failure to follow these instructions could result in equipment damage.

Proper steam trap installation is necessary for satisfactory coil performance and service life. For steam trap installation:

1. Install the steam trap discharge 12 inches below the condensate return connection. Twelve inches provides sufficient hydrostatic head pressure to overcome trap losses and ensures complete condensate removal.
   a. Use float and thermostatic traps with atmospheric pressure gravity condensate return, with automatic controls, or where the possibility of low-pressure supply steam exists. (Float and thermostatic traps are recommended because of gravity drain and continuous discharge operation.)
   b. Use bucket traps only when the supply steam is not modulated and is 25 psig or higher.

Note: *Trane steam coils require a minimum of 2 psi of pressure to assure even heat distribution.*

2. Trap each coil separately to prevent holding up condensate in one or more of the coils.
3. Install strainers as close as possible to the inlet side of the trap.
4. If installing coils in series airflow, control each coil bank independently with an automatic steam-control valve. Size the traps for each coil using the capacity of the first coil in direction of airflow.
5. Use a modulating valve that has linear flow characteristics to obtain gradual modulation of the coil steam supply.

Note: *Do not modulate systems with overhead or pressurized returns unless the condensate is drained by gravity into a receiver, vented to atmosphere, and returned to the condensate pump.*

6. Pitch all supply and return steam piping down 1 inch for every 10 feet in the direction of the steam or condensate flow.

Note: *Do not drain the steam mains or take-offs through the coils. Drain the mains ahead of the coils through a steam trap to the return line.*

7. Ensure overhead returns have 1 psig of pressure at the steam trap discharge for every 2 feet of elevation for continuous condensate removal.

Water Coil Piping

Figure 73, and Figure 74 illustrate typical water coil piping configurations.

Type 5A, 5W, D1, W, UW, TT, P2, P4, and P8 water coils are self-venting only if the water velocity exceeds 1.5 feet per second (fps) in the coil tubes. Type D2, UA, UU, and WD water coils are self-venting only if the water velocity exceeds 2.5 fps in the coil tubes. See the unit submittals for coil water velocity. If the water velocity is below these minimums, vent the coil by one of the following methods:

1. Install an air vent in the top pipe plug tapping of the return header.
2. When the return line rises above the top of the coil, vent from the top of the return header horizontally to the return piping.

Note: *TT coils are designed with larger than normal end tube sheet holes to allow for maximum expansion. Air leakage around tubes should be expected and handled by capping over coil ends or by sealing around tubes with a pliable sealant such as silicone.*

Figure 73. Typical piping for type 5W one-row water coil

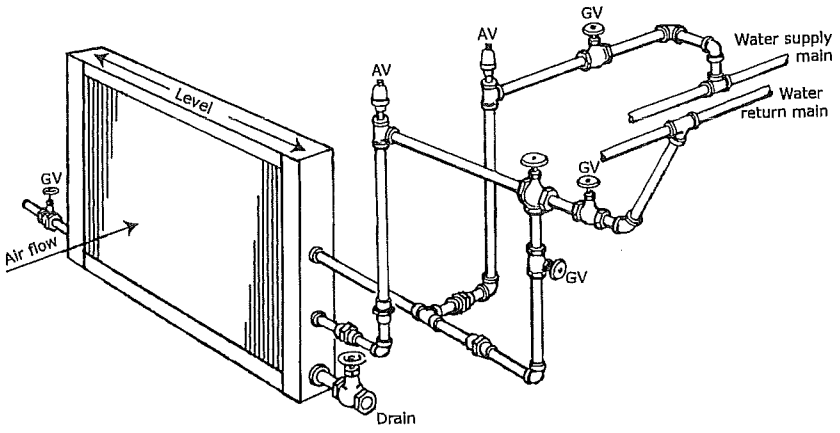

Figure 74. Typical piping for type 5A, 5W two-row, W 3- to 12-row, WD, D1, and D2 water coils

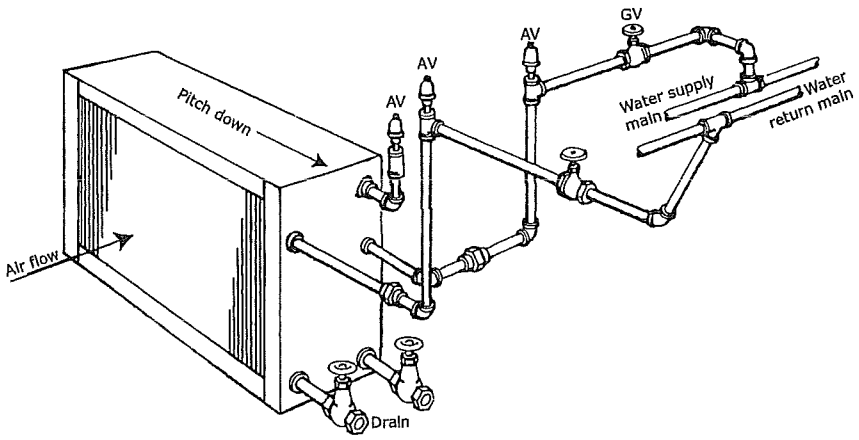

Figure 75. Typical piping for stacked water coils

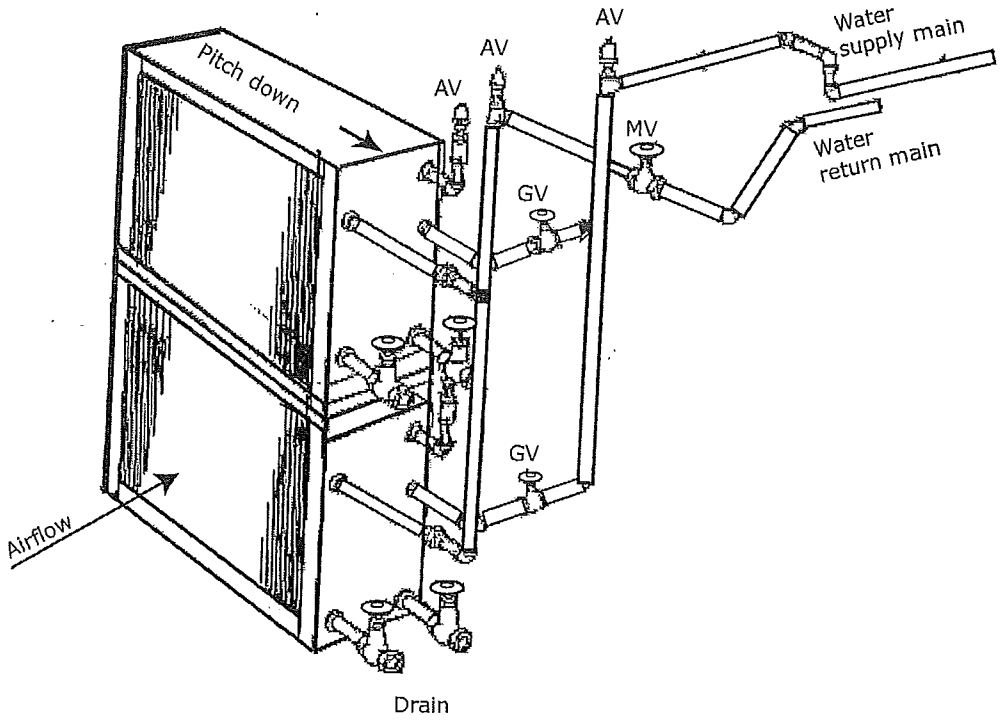

Refrigerant Coil Piping

Note: *Refer to for information on handling refrigerants.*

Use Figure 76 to determine the proper, relative sequence of the components in the refrigerant lines that connect the condensing unit to an evaporator coil. Refer to "Examples of Field-Installed Evaporator Piping" on page 89 for more detailed schematics of evaporator piping.

Figure 76. Example of placement for split-system components

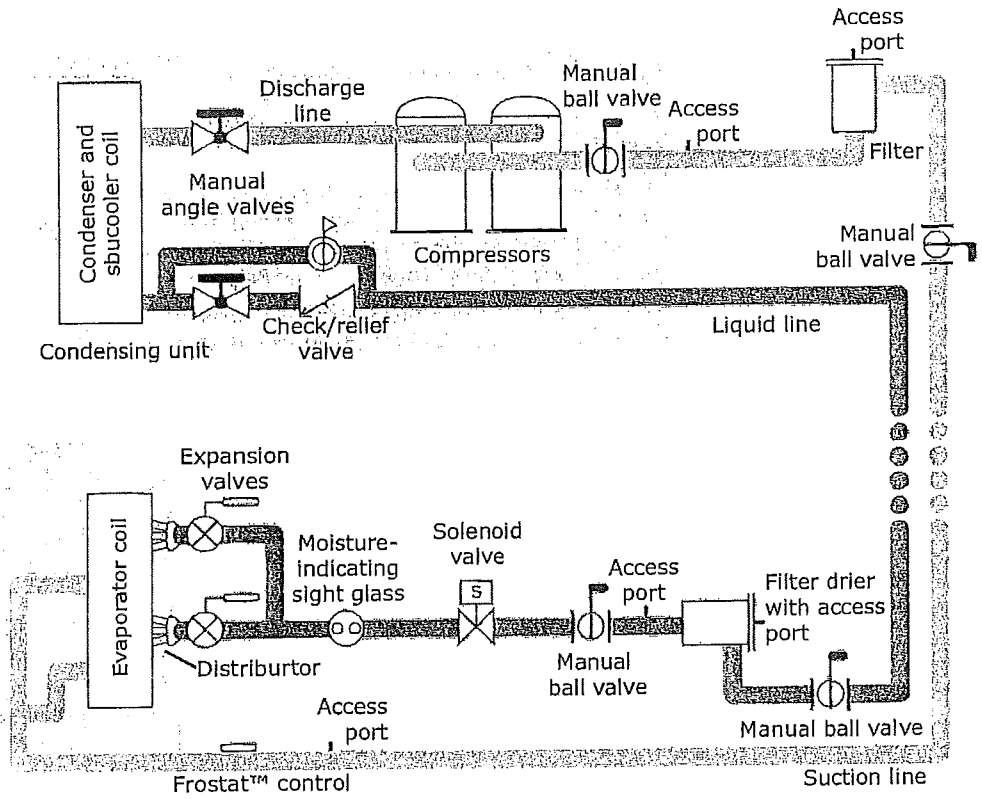

Kit with sensor - X13790452010 SEN-01212
Kit with switch - X13100429010 THT 02442

Liquid Lines

Line Sizing

Properly sizing the liquid line is critical to a successful split-system application. The selected tube diameter must provide at least 5°F [2.7°C] of subcooling at the expansion valve throughout the operating envelope. Increasing the size of the liquid line will not increase the available subcooling.

Routing. Install the liquid line with a slight slope in the direction of flow so that it can be routed with the suction line. Minimize tube bends and reducers because these items tend to increase pressure drop and to reduce subcooling at the expansion valve. Liquid line receivers, other than those that are factory-installed, are not recommended.

Insulation

The liquid line is generally warmer than the surrounding air, so it does not require insulation. In fact, heat loss from the liquid line improves system capacity because it provides additional subcooling.

Components

Liquid-line refrigerant components necessary for a successful job include a filter drier, access port, solenoid valve, moisture-indicating sight glass, expansion valve(s), and ball shutoff valves. Figure 76 illustrates the proper sequence for positioning them in the liquid line. Position the components as close to the evaporator as possible.

- *Filter drier.* There is no substitute for cleanliness during system installation. The filter drier prevents residual contaminants, introduced during installation, from entering the expansion valve and solenoid valve.
- *Access port.* The access port allows the unit to be charged with liquid refrigerant and is used to determine subcooling. This port is usually a Schraeder® valve with a core.
- *Solenoid valve.* In split systems, solenoid valves isolate the refrigerant from the evaporator during off cycles; under certain conditions, they may also trim the amount of active evaporator as compressors unload. Generally, the "trim" solenoid valve is unnecessary for variable-air-volume comfort-cooling applications, and is only required for constant-volume applications when dehumidification is a concern.
- *Moisture-indicating sight glass.* Be sure to install one moisture-indicating sight glass in the main liquid line. The only value of the sight glass is its moisture indication ability. Use actual measurements of temperature and pressure—not the sight glass—to determine subcooling and whether the system is properly charged. The moisture indicator/sight glass must be sized to match the size of the liquid line at the thermal expansion valve.

- *Thermal expansion valve.* The expansion valve is the throttling device that meters the refrigerant into the evaporator coil. Metering too much refrigerant floods the compressor; metering too little elevates the compressor temperature. Choosing the correct size and type of expansion valve is critical to assure it will correctly meter refrigerant into the evaporator coil throughout the entire operating envelope of the system. *Correct refrigerant distribution into the coil requires an expansion valve for each distributor.*

NOTICE:
Valve Damage!

Disassemble the thermal expansion valve before completing the brazing connections. If necessary, wrap the valve in a cool, wet cloth while brazing. Failure to protect the valve from high temperatures could result in damage to internal components.

Figure 77. Type F refrigerant coil with packed elbow

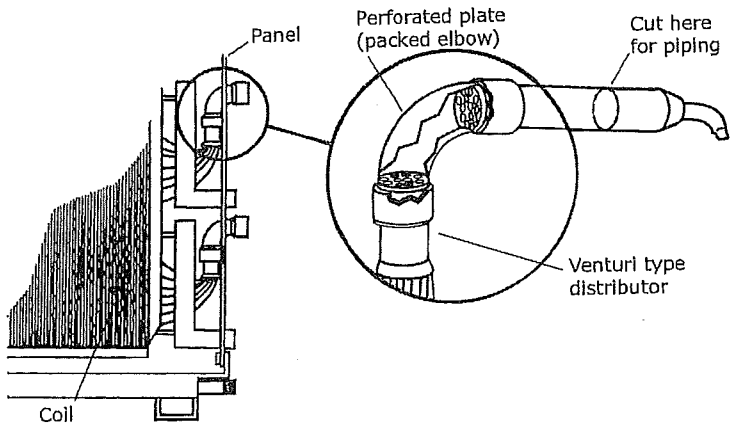

The thermal expansion valve must be selected for proper size and capacity. The size of the expansion valve should cover the full range of loadings. Check that the valve will successfully operate at the lightest load condition. For improved modulation, choose expansion valves with balanced port construction and external equalization.

Cut the process tube and cap assembly from the liquid connection as shown in Figure 77 and install the expansion valve directly to the liquid connections.

Suction Lines

Line sizing

Proper suction-line sizing is required to guarantee the oil returns to the compressor throughout the system's operating envelope. At the same time, the line must be sized so that the pressure drop does not excessively affect capacity or efficiency. To accomplish both objectives, it may be necessary to use two different line diameters: one for the horizontal run and for vertical drops, and another for the vertical lifts.

Routing

To prevent residual or condensed refrigerant from "free-flowing" toward the compressor, install the suction line so it slopes slightly—that is, by ¼ inch to 1 inch per 10 feet of run—toward the evaporator. When the application includes a suction riser, oil must be forced to travel the height of the riser. Riser traps and double risers are unnecessary in the suction line when the refrigerant coil is used with Trane condensing units.

Avoid putting refrigerant lines underground. Refrigerant condensation or installation debris inside the line, service access, and abrasion/corrosion can quickly impair reliability.

Insulation

Any heat that transfers from the surrounding air to the cooler suction lines increases the load on the condenser (reducing the system's air-conditioning capacity) and promotes condensate

formation (adversely affecting indoor air quality). After operating the system and testing all fittings and joints to verify the system is leak-free, insulate the suction lines all the way to inner side panel to prevent heat gain and unwanted condensation.

Components

Installing the suction line requires field installation of these components: a filter, access port, and a Frostat™ control when the refrigerant coil is used with Trane condensing units. Position them as close to the compressor as possible.

Note: *Placement of the Frostat control is illustrated in Figure 76 on page 85.*

- *Filter.* The suction filter prevents contaminants, introduced during installation, from entering the compressor. For this reason, the suction filter should be the replaceable-core type, *and* a clean core should be installed after the system is cleaned up.
- *Access port.* The access port is used to determine suction pressure. This port is usually a Schraeder valve with a core.
- *Frostat™ coil frost protection.* The Frostat control is the preferred method for protecting evaporator coils from freezing when the refrigerant coil is used with Trane condensing units. It senses the suction-line temperature and temporarily disables mechanical cooling if it detects frost conditions. The control is mechanically attached to the outside of the refrigerant line, near the evaporator, and wired to the unit control panel.
- *Ball shutoff valve.* Adding manual, ball-type shutoff valves upstream and downstream of the filter simplifies replacement of the filter core.

Examples of Field-Installed Evaporator Piping

Single-Circuit Condensing Unit: Evaporator Coil with One Distributor

Figure 78. Single-circuit evaporator coil with one distributor

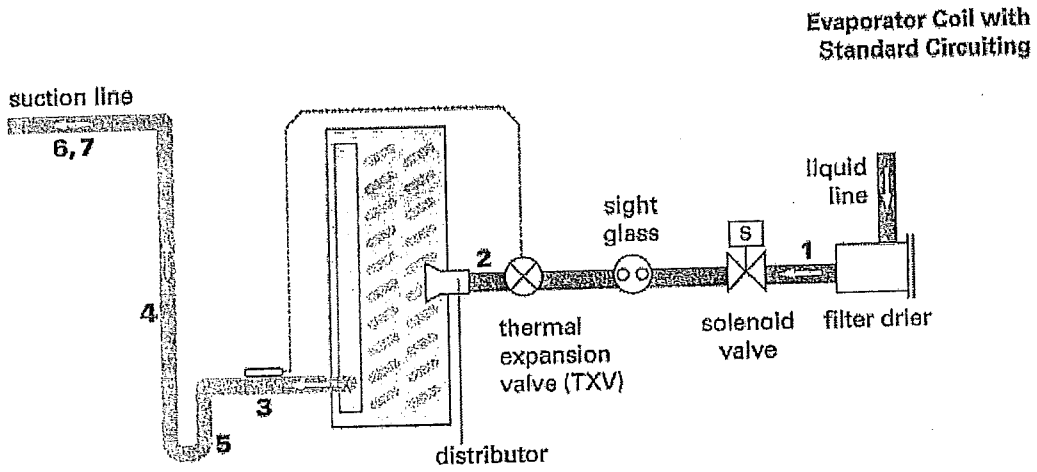

1. Pitch the liquid line slightly—1 inch/10 feet —so that the refrigerant drains toward the evaporator.
2. Provide one expansion valve per distributor.
3. Slightly pitch the outlet line from the suction header toward the suction riser—that is, 1 inch/10 feet in the direction of flow. Use the tube diameter that matches the suction-header connection.
4. For the vertical riser, use the tube diameter recommended by the condensing unit manufacturer. Assure the top of the riser is higher than the evaporator coil.
5. Arrange the suction line so the refrigerant gas leaving the coil flows downward, past the lowest suction-header outlet, before turning upward.
6. Pitch the suction line slightly—1 inch/10 feet —so the refrigerant drains toward the evaporator.
7. Insulate the suction line.

Single-Circuit Condensing Unit: Evaporator Coil with Two Distributors

Figure 79. Single-circuit evaporator coil with two distributors

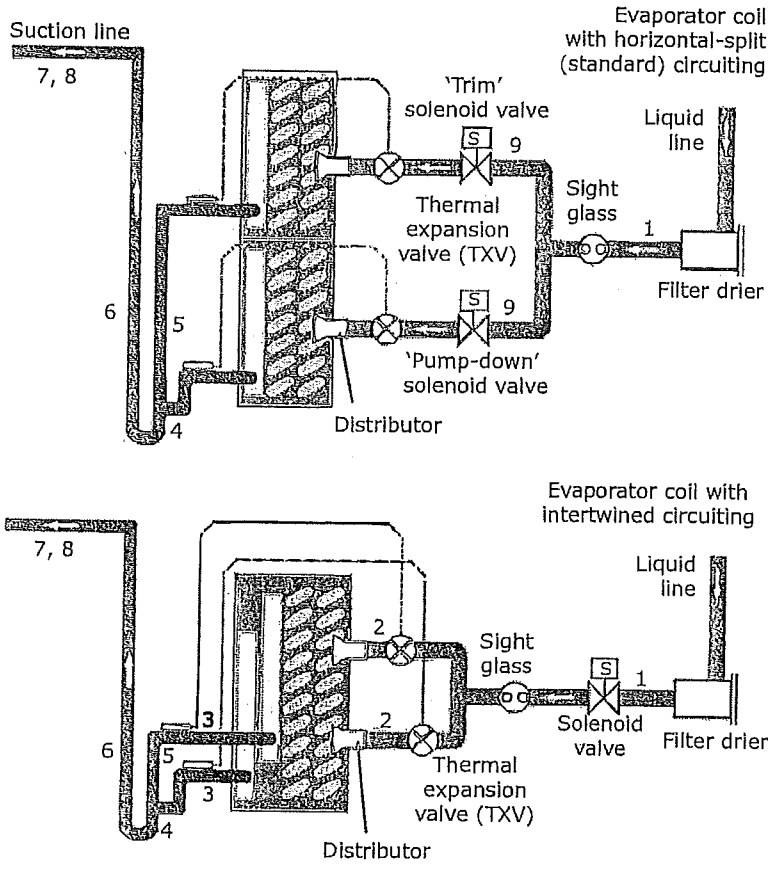

1. Pitch the liquid line slightly—1 inch/10 feet —so the refrigerant drains toward the evaporator.
2. Provide one expansion valve per distributor.
3. Slightly pitch the outlet line from the suction header toward the suction riser—that is, 1 inch/10 feet in the direction of flow. Use the tube diameter that matches the suction-header connection.
4. Arrange the suction line so the refrigerant gas leaving the coil flows downward, past the lowest suction-header outlet, before turning upward. Use a double-elbow configuration to isolate the thermal expansion valve bulb from other suction headers.
5. For horizontal tubing, use the tube diameter recommended by the condensing unit manufacturer.
6. For the vertical riser, use the tube diameter recommended by the condensing unit manufacturer. Assure the top of the riser is higher than the evaporator coil.
7. Pitch the suction line slightly—1 inch/10 feet —so the refrigerant drains toward the evaporator.
8. Insulate the suction line.
9. Only use a "trim" solenoid valve for constant-volume, humidity-sensitive applications. For all other applications, install a single solenoid valve (the "pumpdown" solenoid valve) between the liquid-line filter drier and the sight glass.

Single-Circuit Condensing Unit: Evaporator Coil with Four Distributors

Figure 80. Single-circuit evaporator coil with four distributors

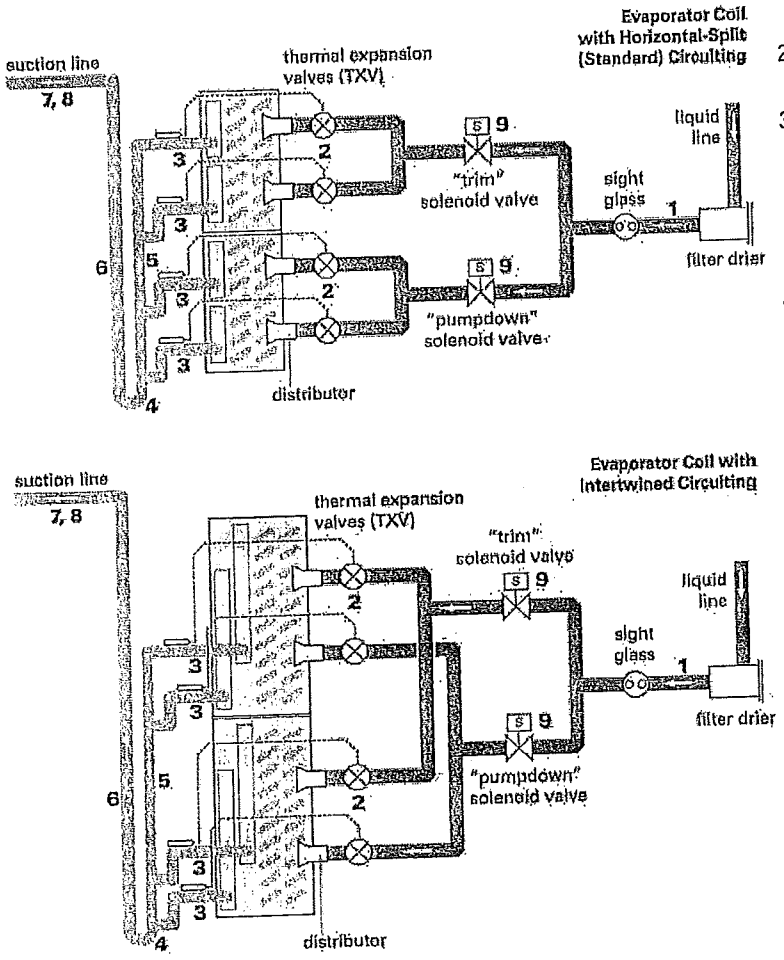

1. Pitch the liquid line slightly—1 inch/10 feet —so the refrigerant drains toward the evaporator.
2. Provide one expansion valve per distributor.
3. Slightly pitch the outlet line from the suction header toward the suction riser—that is, 1 inch/10 feet in the direction of flow. Use the tube diameter that matches the suction-header connection.
4. Arrange the suction line so the refrigerant gas leaving the coil flows downward, past the lowest suction-header outlet, before turning upward. Use a double-elbow configuration to isolate the thermal expansion valve bulb from other suction headers.
5. For horizontal tubing, use the tube diameter recommended by the condensing unit manufacturer.
6. For the vertical riser, use the tube diameter recommended by the condensing unit manufacturer. Assure the top of the riser is higher than the evaporator coil.
7. Pitch the suction line slightly—1 inch/10 feet —so the refrigerant drains toward the evaporator.
8. Insulate the suction line.
9. Only use a "trim" solenoid valve for constant-volume, humidity-sensitive applications. For all other applications, install a single solenoid valve (the "pumpdown" solenoid valve) between the liquid-line filter drier and the sight glass.

Dual-Circuit Condensing Unit: Evaporator Coil with Two Distributors)

Figure 81. Dual-circuit evaporator coil with two distributors

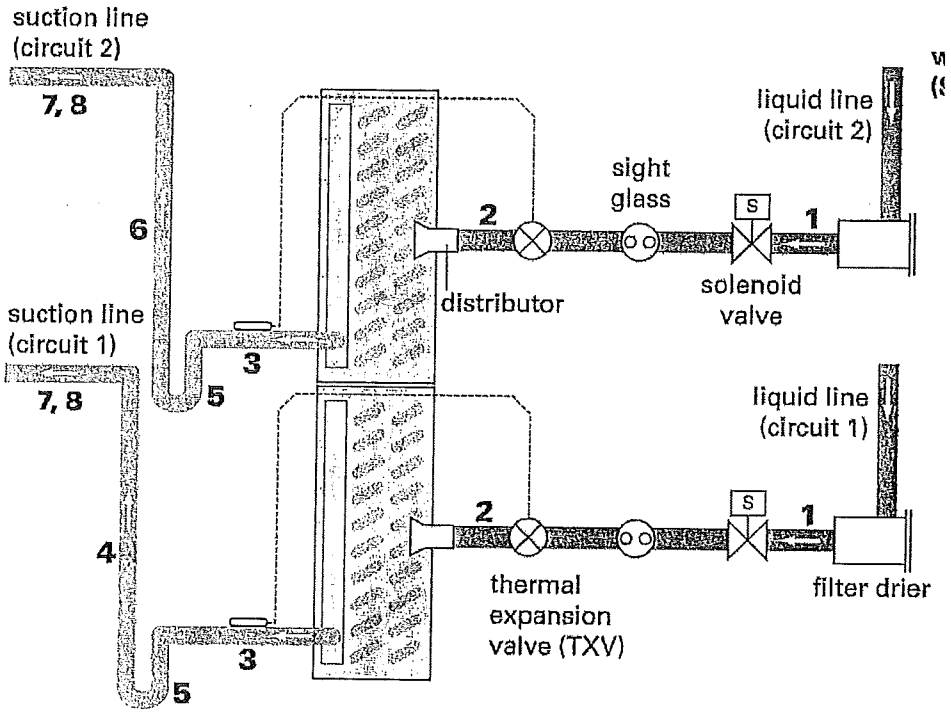

1. Pitch the liquid lines slightly—1 inch/10 feet—so the refrigerant drains toward the evaporator.
2. Provide one expansion valve per distributor.
3. Slightly pitch the outlet line from the suction header toward the suction riser—that is, 1 inch/10 feet in the direction of flow. Use the tube diameter that matches the suction-header connection.
4. The top of the Circuit 1 suction riser must be higher than the bottom evaporator coil. Use the tube diameter recommended by the condensing unit manufacturer for the riser.
5. Arrange the suction line so the refrigerant gas leaving the coil flows downward, past the lowest suction-header outlet, before turning upward.
6. The top of the Circuit 2 suction riser must be higher than the top evaporator coil. Use the tube diameter recommended by the condensing unit manufacturer for the riser.
7. Pitch the suction lines slightly—1 inch/10 feet—so the refrigerant drains toward the evaporator.
8. Insulate the suction lines.

Dual-Circuit Condensing Unit: Evaporator Coil with Four Distributors

Figure 82. Dual-circuit evaporator coil with four distributors

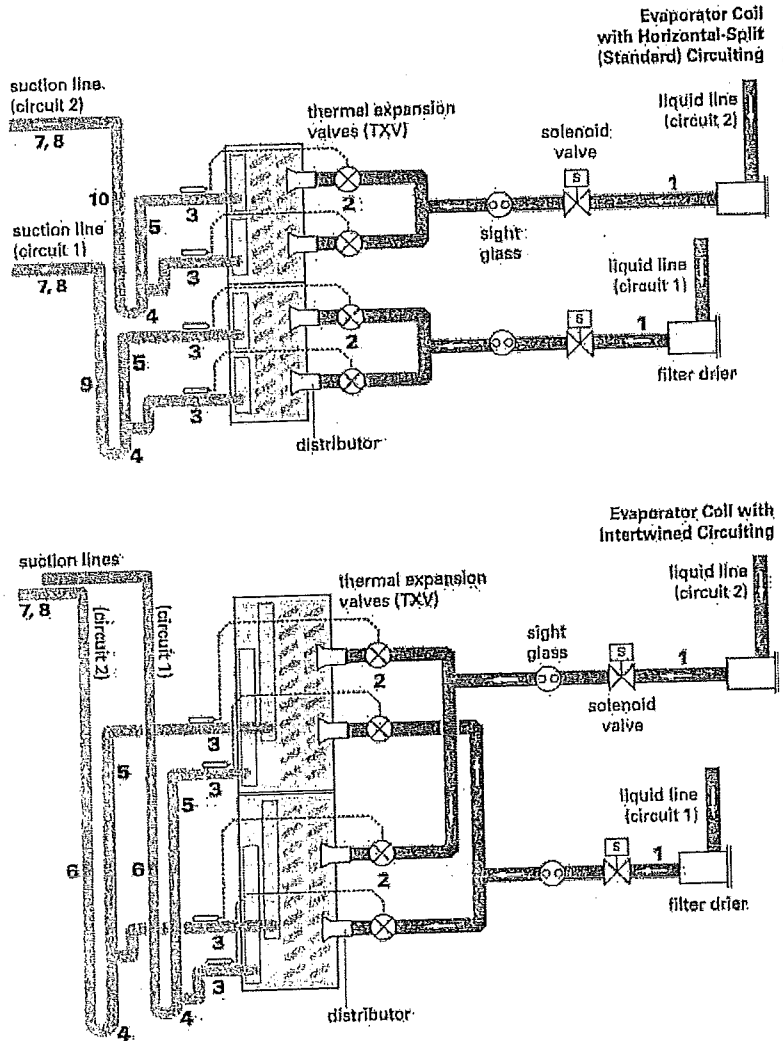

1. Pitch the liquid line slightly—1 inch/10 feet —so the refrigerant drains toward the evaporator.
2. Provide one expansion valve per distributor.
3. Slightly pitch the outlet line from the suction header toward the suction riser—that is, 1 inch/10 feet in the direction of flow. Use the tube diameter that matches the suction-header connection.
4. Arrange the suction line so the refrigerant gas leaving the coil flows downward, past the lowest suction-header outlet, before turning upward. Use a double-elbow configuration to isolate the thermal expansion valve bulb from other suction headers.
5. For horizontal tubing, use the tube diameter recommended by the condensing unit manufacturer.
6. For the vertical riser, use the tube diameter recommended by the condensing unit manufacturer. Assure the top of the riser is higher than the evaporator coil.
7. Pitch the suction line slightly—1 inch/ 10 feet —so the refrigerant drains toward the evaporator.
8. Insulate the suction line.
9. The top of the Circuit 1 suction riser must be higher than the bottom evaporator coil. Use the tube diameter recommended by the condensing unit manufacturer for the riser.
10. The top of the Circuit 2 suction riser must be higher than the top evaporator coil. Use the tube diameter recommended by the condensing unit manufacturer for the riser.

Dual-Circuit Condensing Unit: Evaporator Coil with Eight Distributors

Figure 83. Dual-circuit evaporator coil with eight distributors

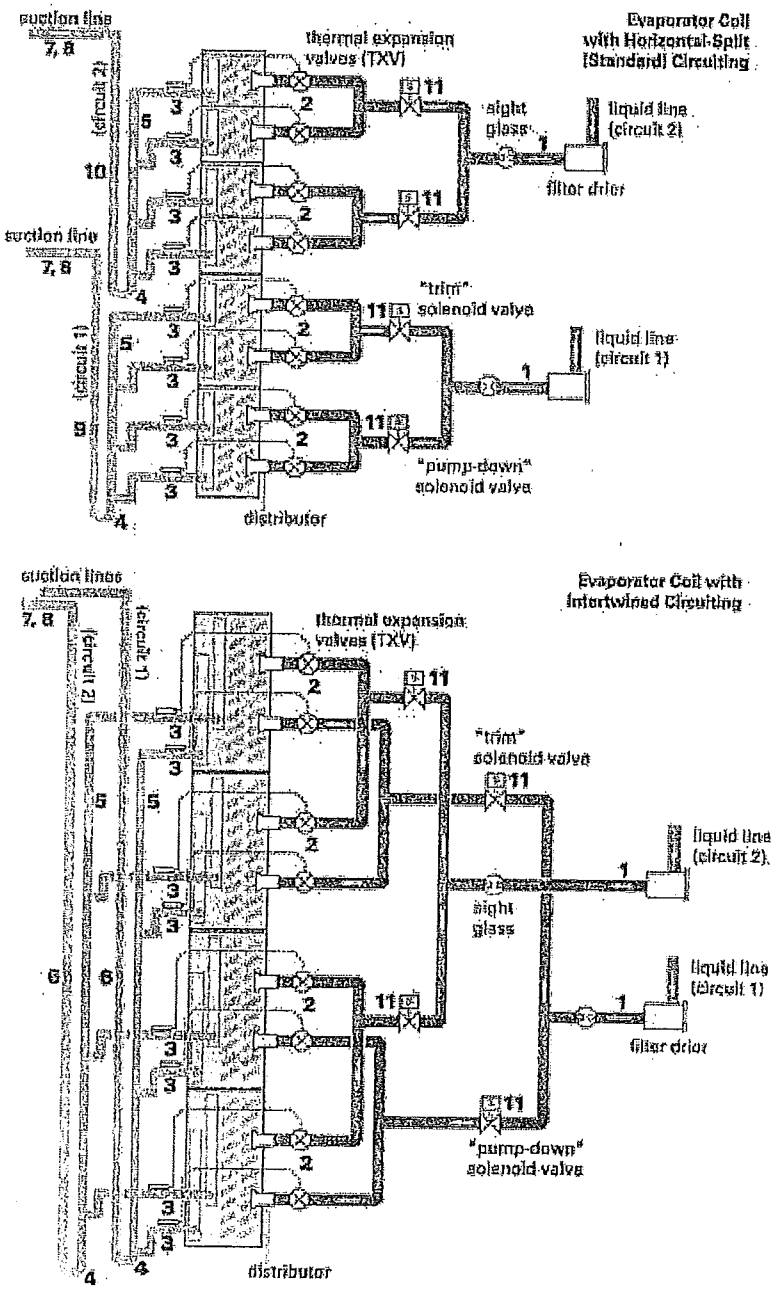

1. Pitch the liquid line slightly—1 inch/10 feet —so the refrigerant drains toward the evaporator.
2. Provide one expansion valve per distributor.
3. Slightly pitch the outlet line from the suction header toward the suction riser—that is, 1 inch/10 feet in the direction of flow. Use the tube diameter that matches the suction-header connection.
4. Arrange the suction line so the refrigerant gas leaving the coil flows downward, past the lowest suction-header outlet, before turning upward. Use a double-elbow configuration to isolate the TXV bulb from other suction headers.
5. For horizontal tubing, use the tube diameter recommended by the condensing unit manufacturer.
6. For the vertical riser, use the tube diameter recommended by the condensing unit manufacturer. Assure the top of the riser is higher than the evaporator coil.
7. Pitch the suction line slightly—1 inch/ 10 feet —so the refrigerant drains toward the evaporator.
8. Insulate the suction line.
9. The top of the Circuit 1 suction riser must be higher than the bottom evaporator coil. Use the tube diameter recommended by the condensing unit manufacturer for the riser.
10. The top of the Circuit 2 suction riser must be higher than the top evaporator coil. Use the tube diameter recommended by the condensing unit manufacturer for the riser.
11. Only use a "trim" solenoid valve for constant-volume, humidity-sensitive applications. For all other applications, install a single solenoid valve (the "pumpdown" solenoid valve) between the liquid-line filter drier and the sight glass.

Installation - Electrical

⚠ WARNING
Hazardous Voltage w/ Capacitors!

Disconnect all electric power, including remote disconnects before servicing. Follow proper lockout/tagout procedures to ensure the equipment cannot be inadvertently energized. For variable frequency drives or other energy storing components provided by Trane or others, refer to the appropriate manufacturer's literature for allowable waiting periods for discharge of capacitors. Verify with an appropriate voltmeter that all capacitors have discharged. Failure to disconnect power and discharge capacitors before servicing could result in death or serious injury.

Note: *For additional information regarding the safe discharge of capacitors, see PROD-SVB06A-EN or PROD-SVB06A-FR*

⚠ WARNING
Proper Field Wiring and Grounding Required!

All field wiring MUST be performed by qualified personnel. Improperly installed and grounded field wiring poses FIRE and ELECTROCUTION hazards. To avoid these hazards, you MUST follow requirements for field wiring installation and grounding as described in NEC and your local/ state electrical codes. Failure to follow codes could result in death or serious injury.

Use Copper Conductors Only!

Unit terminals are not designed to accept other types of conductors. Use of aluminum or other type of wiring may result in galvanic corrosion or overheating. Failure to use copper conductors could result in equipment damage.

If the unit does not include a factory-mounted starter, wiring to the unit fan motor must be provided by the installer and must comply with all national and local electrical codes. The installer must also furnish a service disconnect switch in compliance with national and local electrical codes.

Fan motors require motor overload protective devices that are rated or selected in compliance with the National Electric Code (NEC) or Canadian Electric Code. Specific unit and motor connection diagrams are provided on the starter/VFD if Trane-provided, or refer to the motor nameplate.

If wiring directly to the motor, a flexible connection at the motor to permit fan belt adjustment should be provided. Fractional horsepower motors may be factory connected to a terminal box on the unit. If this construction is provided, the installer should complete field wiring to this connection box. For a typical high voltage wiring schematic, see Figure 84.

Figure 84. Typical VFD wiring schematic

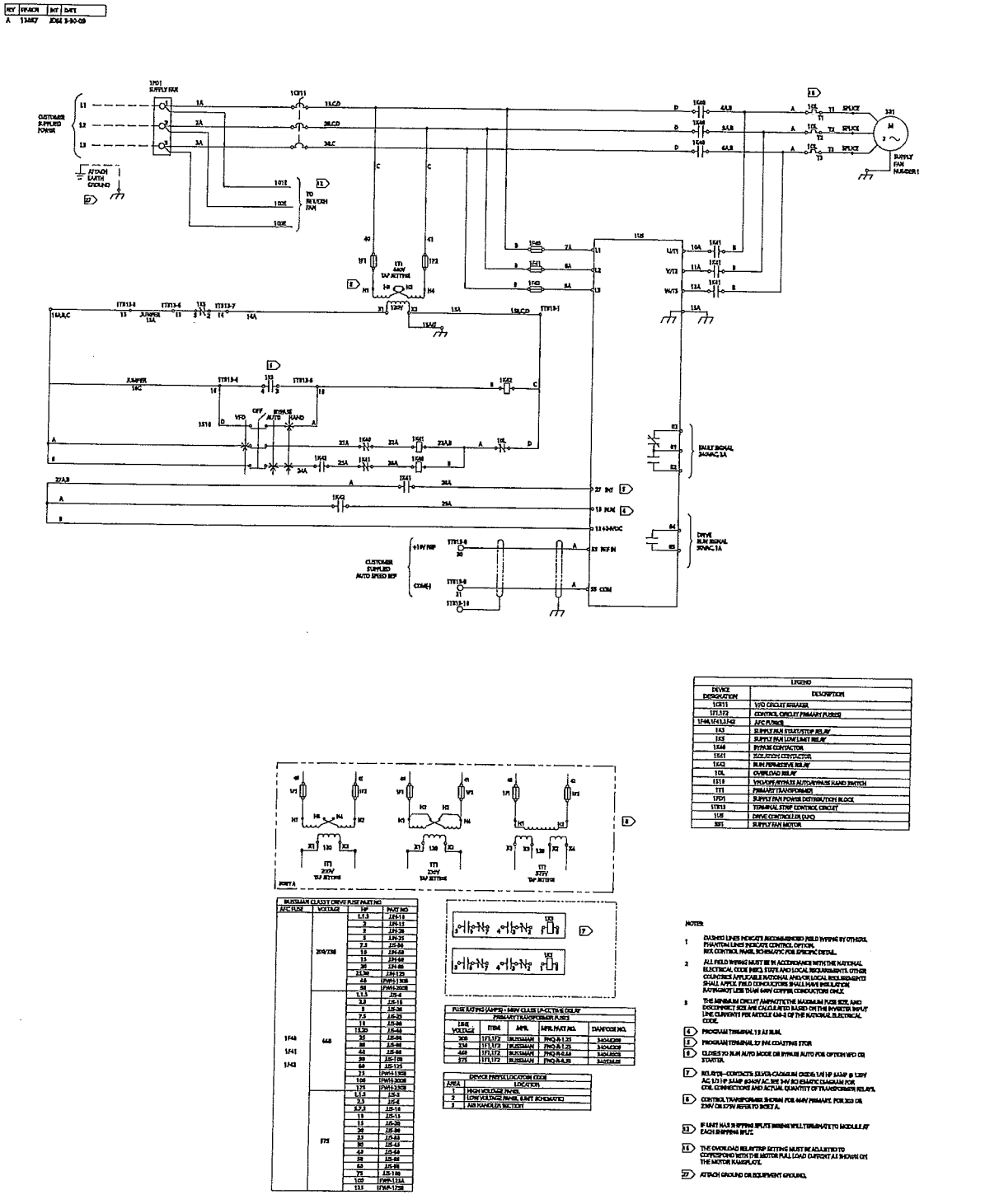

Figure 85. Typical starter wiring schematic

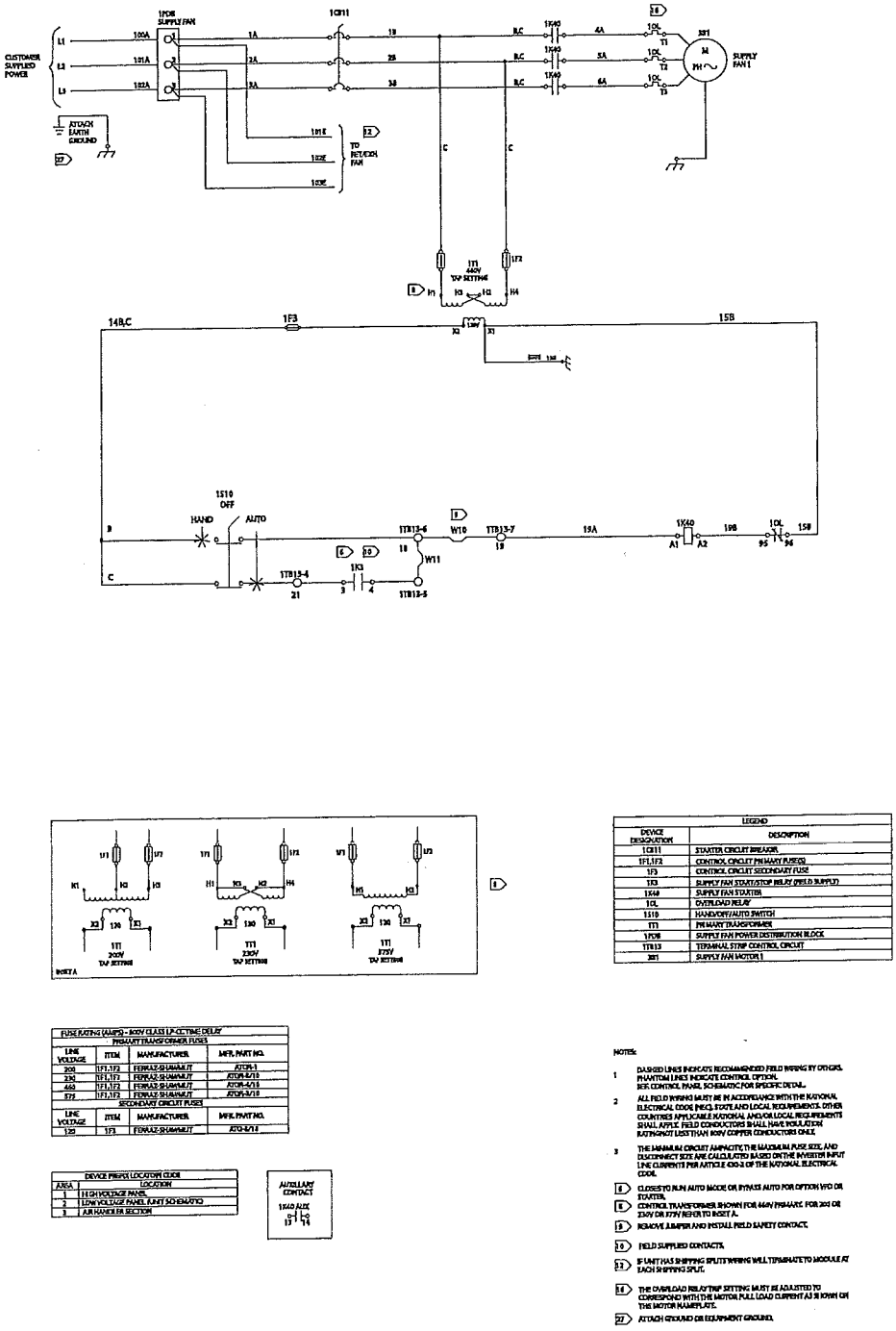

LEGEND	
DEVICE DESIGNATION	DESCRIPTION
1CB11	STARTER CIRCUIT BREAKER
1F1,1F2	CONTROL CIRCUIT PRIMARY FUSE(S)
1F3	CONTROL CIRCUIT SECONDARY FUSE
1K3	SUPPLY FAN START/STOP RELAY (FIELD SUPPLY)
1K40	SUPPLY FAN STARTER
1OL	OVERLOAD RELAY
1S10	HAND/OFF/AUTO SWITCH
1T1	PRIMARY TRANSFORMER
1FU8	SUPPLY FAN POWER DISTRIBUTION BLOCK
1TB13	TERMINAL STRIP CONTROL CIRCUIT
3M1	SUPPLY FAN MOTOR 1

FUSE RATING (AMPS) - 600V CLASS LP-CC TIME DELAY			
PRIMARY TRANSFORMER FUSES			
LINE VOLTAGE	ITEM	MANUFACTURER	MFR. PART NO.
200	1F1,1F2	FERRAZ-SHAWMUT	ATDR-1
230	1F1,1F2	FERRAZ-SHAWMUT	ATDR-1/10
460	1F1,1F2	FERRAZ-SHAWMUT	ATDR-4/10
575	1F1,1F2	FERRAZ-SHAWMUT	ATDR-5/10
SECONDARY CIRCUIT FUSES			
LINE VOLTAGE	ITEM	MANUFACTURER	MFR. PART NO.
120	1F3	FERRAZ-SHAWMUT	ATQ-6/10

DEVICE PREFIX LOCATION CODE	
AREA	LOCATION
1	HIGH VOLTAGE PANEL
2	LOW VOLTAGE PANEL (UNIT SCHEMATIC)
3	AIR HANDLER SECTION

AUXILIARY CONTACT
1K40 AUX
13
14

NOTES:

1. DASHED LINES INDICATE RECOMMENDED FIELD WIRING BY OTHERS. PHANTOM LINES INDICATE CONTROL OPTION. SEE CONTROL PANEL SCHEMATIC FOR SPECIFIC DETAIL.
2. ALL FIELD WIRING MUST BE IN ACCORDANCE WITH THE NATIONAL ELECTRICAL CODE (NEC), STATE AND LOCAL REQUIREMENTS. OTHER COUNTRIES' APPLICABLE NATIONAL AND/OR LOCAL REQUIREMENTS SHALL APPLY. FIELD CONDUCTORS SHALL HAVE INSULATION RATING OF NOT LESS THAN 90°C COPPER CONDUCTORS ONLY.
3. THE MINIMUM CIRCUIT AMPACITY, THE MAXIMUM FUSE SIZE, AND DISCONNECT SIZE ARE CALCULATED BASED ON THE INVERTER INPUT LINE CURRENTS PER ARTICLE 430-3 OF THE NATIONAL ELECTRICAL CODE.
6. CLOSES TO RUN AUTO MODE OR BYPASS AUTO FOR OPTION W10 OR STARTER.
8. CONTROL TRANSFORMER SHOWN FOR 460V PRIMARY. FOR 200 OR 230V OR 575V REFER TO INSET A.
9. REMOVE JUMPER AND INSTALL FIELD SAFETY CONTACT.
10. FIELD SUPPLIED CONTACTS.
12. IF UNIT HAS SHIPPING SPLITS WIRING WILL TERMINATE TO MODULE AT EACH SHIPPING SPLIT.
14. THE OVERLOAD RELAY TRIP SETTING MUST BE ADJUSTED TO CORRESPOND WITH THE MOTOR FULL LOAD CURRENT AS SHOWN ON THE MOTOR NAMEPLATE.
27. ATTACH GROUND OR EQUIPMENT GROUND.

Figure 86. Transformer plate

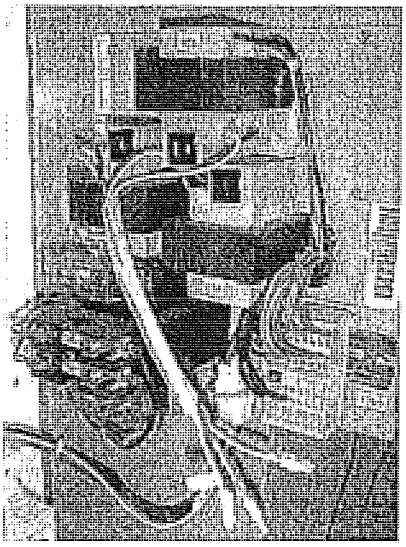

Figure 87. 120 to 24 Vac Control Transformer

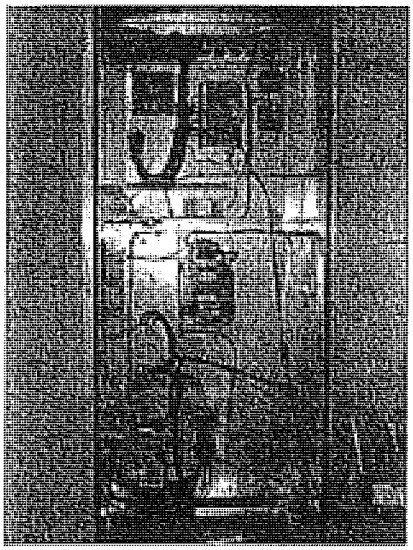

Figure 88. Variable-frequency drive (VFD)

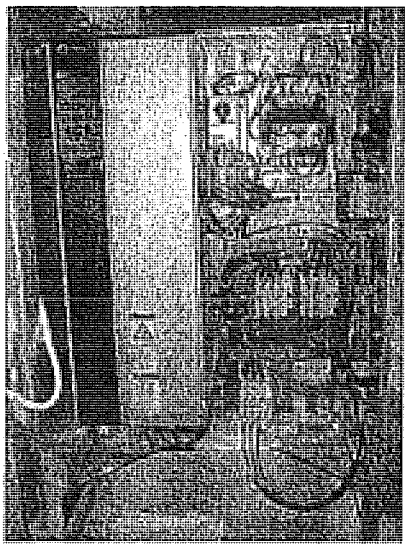

Note: *Properly seal all penetrations in unit casing. Failure to seal penetrations from inner panel to outer panel could result in unconditioned air entering the unit.*

All units with starters or variable-frequency drives (VFDs) that have direct-digital controllers (DDCs) are provided with line voltage to 24 Vac power transformers (see Figure 86). All units with factory-mounted controllers, and no starters or VFDs, are provided with 120 Vac to 24 Vac control transformers (see Figure 87). Figure 88 shows a typical VFD power box.

Note: *The valve jack is typically located at the air-leaving side of the coil connection inside the casing panel.*

To provide field-wiring to units with DDC controls:

- If VFD or starter is not factory-mounted, provide 120 Vac power to a transformer in the controller enclosure. A separate circuit is recommended (see Figure 87).
- Install outside-air sensor and space sensor, if ordered.
- For valve junction box mounting and wiring detail, see Figure 89.

Figure 89. Junction box for valve wiring

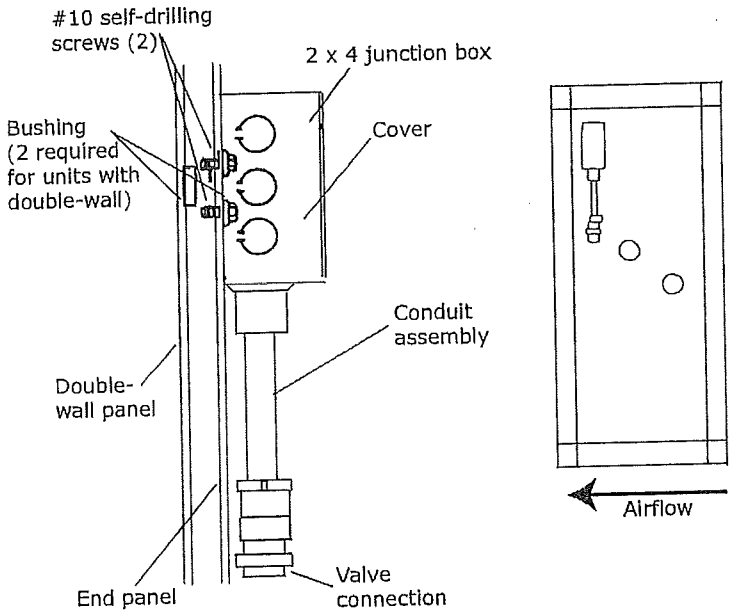

Quick Connects

The actuators, factory-mounted or field-supplied, are separately wired and controlled by a direct-digital controller or other building logic. Figure 90 illustrates the typical quick connect scheme.

Figure 90. Typical quick connects with wiring identification

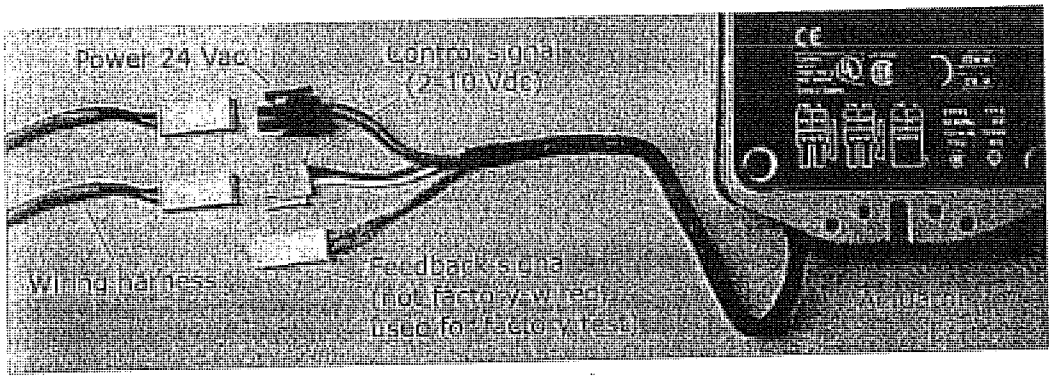

Controls Interface

The portable operator display is used for temporary connection to and operation of Tracer MP580/581 controllers. With the portable operator display, you can monitor data, change setpoints, monitor alarms, and override points. The portable operator display includes a 10 ft (3 m) cable with connector that is stored in the storage compartment of the carrying bag. The cable cannot be disconnected from the operator display. Keep this document with the portable operator display for access to calibration and cleaning instructions.

Note: *The portable operator display is not used for timeclock scheduling. To provide scheduling you must use a Tracer Summit system.*

Connecting the operator display

To connect the portable operator display:

1. Locate the factory-provided service module (see Figure 91).
2. Attach the operator-display cable to the operator-display connector on the service module. The operator display receives power from the controller and turns on automatically when it is connected.

Figure 91. Service module

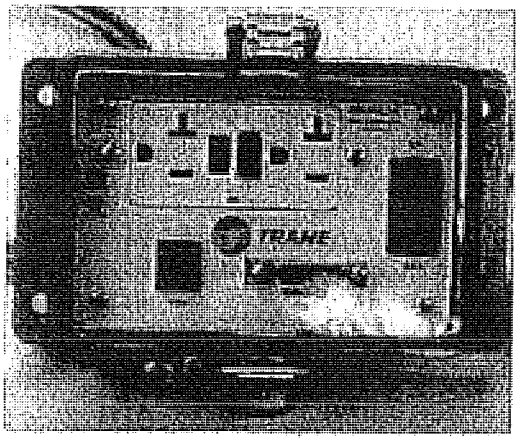

Setting up the operator display

NOTICE:

Equipment Damage!

To clean the operator display, use a cloth dampened with commercial liquid glass cleaner. Spraying water or cleansers directly on the screen could result in equipment damage.

This section shows how to calibrate the operator display touch screen and how to adjust the brightness and contrast. To set up the operator display screens and security, see the *Tracer MP580/581 Programmable Controller Programming* guide (CNT-SVP01B-EN).

Calibrating the operator display

To calibrate the operator display:

1. On the home screen, press Setup. The Setup menu appears.
2. Page down to view the next screen.
3. Press Calibrate Touch Screen. A calibration screen appears.

NOTICE:

Equipment Damage!

Do not allow the operator display to come in contact with sharp objects. This could result in equipment damage.

4. Touch the target using a small, pliable, blunt object, such as a pencil eraser or your finger. Hold until the beeping stops. A second calibration screen appears.
5. Again, touch the target with the object. Hold until the beeping stops. The Advanced Selection screen appears.
6. Press Home. The home screen appears.

Adjusting brightness and contrast

To adjust the brightness and contrast of the operator display:

1. On the home screen, press Setup. The Setup menu appears.
2. Page down to view the next screen.
3. Press the Adjust Brightness and Contrast buttons. The Brightness and Contrast screen appears.
4. To increase the brightness, press the buttons along the top row, in sequence, from left to right. To decrease the brightness, press the buttons from right to left.

Note: *Contrast adjustment is not available on all computer display models.*

5. To increase the contrast, press the buttons along the bottom row, in sequence, from left to right. To decrease the contrast, press the buttons from right to left.
6. Press Home. The home screen appears.

External communications port

Units with a factory-provided DDC controller can include a service module (see Figure 91) with an external communications port when purchased. Both the operator display and Rover service tool can be connected without shutting off the unit through the external communications port. Open the cover plate on the service module and plug into the RJ-11 port for the operator display or the RS 485 port for the Rover service tool. This enables continuous operation of the air handler without disruption to the operating conditions of the unit. When servicing of the unit is complete, close the cover plate on the service module to eliminate any air leakage path.

Start-Up

Pre-Startup Checklist

Once the air handler has been assembled and installed, attention must be directed to individual components for proper operation. Before operating the unit, complete the pre-startup checklist.

⚠ WARNING
Hazardous Voltage w/ Capacitors!

Disconnect all electric power, including remote disconnects before servicing. Follow proper lockout/tagout procedures to ensure the equipment cannot be inadvertently energized. For variable frequency drives or other energy storing components provided by Trane or others, refer to the appropriate manufacturer's literature for allowable waiting periods for discharge of capacitors. Verify with an appropriate voltmeter that all capacitors have discharged. Failure to disconnect power and discharge capacitors before servicing could result in death or serious injury.

Note: *For additional information regarding the safe discharge of capacitors, see PROD-SVB06A-EN or PROD-SVB06A-FR*

General Checks

- Ensure the unit has been installed level.
- Ensure supply-air and return-air ducts have been connected.
- Ensure damper operator motors and connecting linkage have been installed.
- Verify damper operation and linkage alignment.
- Check that air filters are in place and positioned properly.
- Remove any debris from the unit interior.
- Remove all foreign material from the drain pan and check drain pan opening and condensate line for obstructions.
- Close and secure all unit access doors.
- If differential pressure switch is provided on filter rack, adjust per system requirements.
- Inspect electrical connections to the unit and unit controllers.
  - Connections should be clean and secure.
  - Compare the actual wiring with the unit diagrams.
  - Reference the appropriate controller manual for more details about starting units with factory-mounted controls.
- Check piping and valves for leaks. Open or close the valves to check for proper operation. Drain lines should be open.
- Leave this manual with the unit.

Fan-Related Checks

- If the unit is *not* externally isolated, ensure that the fan isolator tie-down bolts have been removed. See "Fan Isolation" section on page 61 for more information.
- Rotate all fan wheels manually to confirm they turn freely in the proper direction.
- Check fan shaft bearings, fan wheel, and drive sheave set screws for proper torque settings (see Table 26 on page 108.
  - Fan sheaves should be tight and aligned.
  - Bearing set screws should be torqued. See Table 37 on page 124 for torque values.
- Check fan drive belt tension. See "Tension the Fan Belt" section on page 106.
- Inspect fan motor and bearings for proper lubrication, if necessary. See "Fan Bearing Lubrication" on page 123.

Coil-Related Checks

NOTICE:

Proper Water Treatment!

The use of untreated or improperly treated water in coils could result in scaling, erosion, corrosion, algae or slime. It is recommended that the services of a qualified water treatment specialist be engaged to determine what water treatment, if any, is required. Trane assumes no responsibility for equipment failures which result from untreated or improperly treated water, or saline or brackish water.

- Ensure coil and condensate drain piping connections are complete.
- Check the piping and valves for leaks.
  - Open or close the valves to check operation.
  - The drain lines should be open.
- If unit has a refrigerant coil, ensure that it has been charged and leak-tested according to the instructions provided with the condenser equipment. Adjust the superheat setting.
- Remove all foreign material from the drain pan and check the pan opening and condensate line for obstructions.
- For steam coils, slowly turn the steam on full for at least 10 minutes before opening the fresh air intake on units with fresh air dampers.

Motor-Related Checks

- Locate installation manual from the motor manufacturer for the specific motor installed. This can be found by contacting the motor manufacturer's representative. The motor manufacturer's recommendations take precedence for all matters related to the start-up and routine maintenance of the motor.
- Check the motor lubrication for moisture and rust.
  - Remove and clean grease plugs to inspect.
  - If moisture is present, consult an authorized repair shop for bearing inspection/replacement. This may require removal and transport of motor.
  - If no moisture is present, refer to the motor manufacturer's lubrication recommendations for proper lubrication.
  - The motor manufacturer may recommend lubricating the motor as part of their routine start-up instructions.
- Check motor winding. An acceptable winding resistance reading is from 6 meg-ohms to infinity. If reading is less than 5 mega-ohms, the winding should be dried out in an oven or by a blower.
- Inspect the entire motor for rust and corrosion.
- Bump-start the unit and confirm the fan wheel rotates properly, as indicated by the rotation arrow located on the fan housing.

Note: *For motor warranty needs, contact your local Trane sales office.*

Unit Operation

⚠ WARNING
Rotating Components!

During installation, testing, servicing and troubleshooting of this product it may be necessary to measure the speed of rotating components. Have a qualified or licensed service individual who has been properly trained in handling exposed rotating components, perform these tasks. Failure to follow all safety precautions when exposed to rotating components could result in death or serious injury.

⚠ WARNING
Live Electrical Components!

During installation, testing, servicing and troubleshooting of this product, it may be necessary to work with live electrical components. Have a qualified licensed electrician or other individual who has been properly trained in handling live electrical components perform these tasks. Failure to follow all electrical safety precautions when exposed to live electrical components could result in death or serious injury.

Before complete start-up, bump-start the unit and confirm the fan wheel rotates properly, as indicated by the rotation arrow located on the fan housing.

After initial startup:

- Calculate the motor voltage imbalance, notifying the power company to correct unacceptable imbalances.
- Periodically check the fan belt tension.

Calculate Motor Voltage Imbalance

After startup, measure the motor voltage and amperage on all phases to ensure proper operation. The readings should fall within the range given on the motor nameplate. The maximum allowable voltage imbalance is 2 percent.

Voltage imbalance is defined as 100 times the sum of the deviation of the three voltages from the average, divided by twice the average voltage. For example, if the three measured voltages are 221, 230 and 227, the average voltage would be 226 volts. The percent of voltage imbalance is then calculated.

$$\textbf{Voltage imbalance} = \frac{100A}{2 \times AvgVoltage}$$

where:
A = (226-221) + (230-226) + (227-226)

Voltage imbalance = 2.2% (not acceptable)

In the example, 2.2 percent imbalance is not acceptable and the power company should be notified to correct it.

Tension the Fan Belt

NOTICE:
Belt Tension!

Do not over-tension belts. Excessive belt tension will reduce fan and motor bearing life, accelerate belt wear and possibly cause shaft failure. Under tensioning belts is the primary cause of premature belt failure. Belts should not squeal at startup. Recheck belt tension after 8 hours, 24 hours, and 100 hours of operation and monthly thereafter.

Figure 92. Tension drive belt label

Browning	V-BELT DRIVE KIT	1627373
	MODULE 0400	
PURCHASE ORD. NUMBER B24597-061 H5D073B A		
CUSTOMER'S KIT # H5D073B A-012-0400		
MTR HP.= 10.0		
FAN RPM = 1458 CD = 9.4 AT 3.00 TRN OPN		
TENSION INFO - 3.86 LB., 0.14 IN.		
DRIVE'S BELTS - B40		
MOTOR SHEAVE - 2VP75X 1 3/8		
MOTOR BUSHING - NONE REQUIRED		
FAN SHEAVE - 2B5V80		
FAN BUSHING - B 1 7/16		

Proper belt tension is required to ensure maximum bearing and drive component life and is based on motor horsepower requirement. A label located on the bearing support on the drive side of the unit lists all drive parts, the proper belt tension, and deflection for that tension for the specific drive (Figure 92).

If the drive is changed from the original, proper belt tension can be estimated using Table 25.

The correct operation tension for a V-belt drive is the lowest tension at which the belts will not slip under the peak load conditions. It may be necessary, however, to increase the tension of some drives to reduce excessive belt flopping or to reduce excessive startup squealing.

Figure 93. Belt tensioner

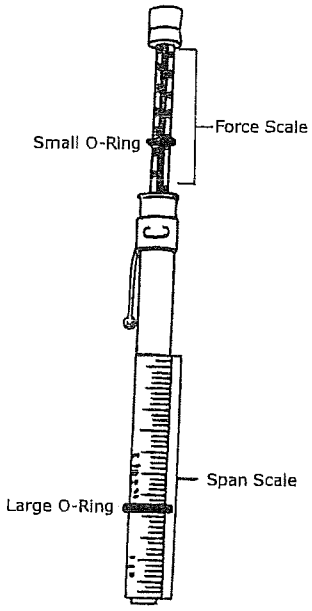

Check the fan belt tension at least three times during the first days of operation because there is a rapid decrease in tension until the belt settles in. To measure belt tension, use a belt tensiometer (see Figure 93). Determine actual deflection by depressing one belt with the belt tensiometer and measuring the deflection relative to the other belts or to belt line (see Figure 94). Adjust the belt tension to the correct pounds force and tighten all set screws to the proper torque.

Figure 94. Belt tension measurement

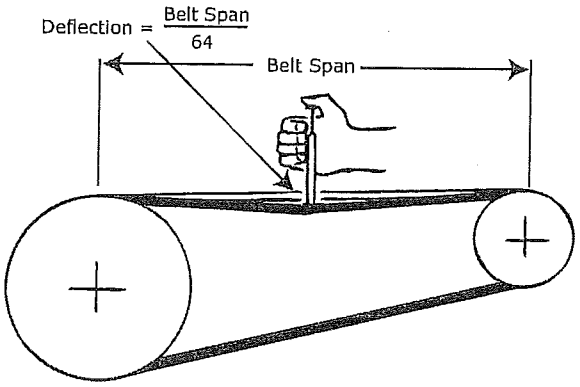

Table 25. Typical sheave diameter and deflection force

Cross-section	Smallest sheave diameter range (in.)	Speed (rpm) range	Belt Deflection Force (lbs) Super gripbelts and unnotched gripbands		Gripnotch belts and notched gripbands	
			Used belt	New belt	Used belt	New belt
A, AX	3.0–3.6	1,000–2,500	3.7	5.5	4.1	6.4
		2,501–4,000	2.8	4.2	3.4	5.0
	3.8–4.8	1,000–2,500	4.5	6.8	5.0	7.4
		2,501–4,000	3.8	5.7	4.3	6.4
	5.0–7.0	1,000–2,500	5.4	8.0	5.7	9.4
		2,501–4,000	4.7	7.0	5.1	7.6
B, BX	3.4–4.2	860–2,500	n/a	n/a	4.9	7.2
		2,501–4,000	n/a	n/a	4.2	6.2
	4.4–5.6	860–2,500	5.3	7.9	7.1	10.5
		2,501–4,000	4.5	6.7	7.1	9.1
	5.8–8.6	860–2,500	6.3	9.4	8.5	12.6
		2,501–4,000	6.0	8.9	7.3	10.9
C, CX	7.0–9.0	500–1,740	11.5	17.0	14.7	21.8
		1,741–3,000	9.4	13.8	11.9	17.5
	9.5–16.0	500–1,740	14.1	21.0	15.9	23.5
		1,741–3,000	12.5	18.5	14.6	21.6
D	12.0–16.0	200–850	24.9	37.0	n/a	n/a
		851–1,500	21.2	31.3	n/a	n/a
	18.0–20.0	200–850	30.4	45.2	n/a	n/a
		851–1,500	25.6	38.0	n/a	n/a
3V, 3VX	2.2–2.4	1,000–2,500	n/a	n/a	3.3	4.9
		2,501–4,000	n/a	n/a	2.9	4.3
	2.65–3.65	1,000–2,500	3.6	5.1	4.2	6.2
		2,501–4,000	3.0	4.4	3.8	5.6
	4.12–6.90	1,000–2,500	4.9	7.3	5.3	7.9
		2,501–4,000	4.4	6.6	4.9	7.3
5V, 5VX	4.4–6.7	500–1,749	n/a	n/a	10.2	15.2
		1,750–3,000	n/a	n/a	8.8	13.2
		3,001–4,000	n/a	n/a	5.6	8.5
	7.1–10.9	500–1,749	12.7	18.9	14.8	22.1
		1,750–3,000	11.2	16.7	13.7	20.1
	11.8–16.0	500–1,749	15.5	23.4	17.1	25.5
		1,750–3,000	14.6	21.8	16.8	25.0
8V	12.5–17.0	200–850	33.0	49.3	n/a	n/a
		851–1,500	26.8	39.9	n/a	n/a
	18.0–22.4	200–850	39.6	59.2	n/a	n/a
		851–1,500	35.3	52.7	n/a	n/a

Determine Fan Speed

⚠ WARNING
Rotating Components!

During installation, testing, servicing and troubleshooting of this product it may be necessary to measure the speed of rotating components. Have a qualified or licensed service individual who has been properly trained in handling exposed rotating components, perform these tasks. Failure to follow all safety precautions when exposed to rotating components could result in death or serious injury.

Fan speed can be determined using a strobe-type tachometer, or revolution counter.

Check unit vibration if the fan speed is changed more than five percent from the original designed speed, or if parts such as shafts, fan wheels, bearings, or other drive components are replaced. Do not exceed the maximum fan speed.

Pay particular attention to any vibration, noise, or overheating of the motor and fan bearings; however, note that bearings may run warm during break in.

Figure 95. Proper drive alignment

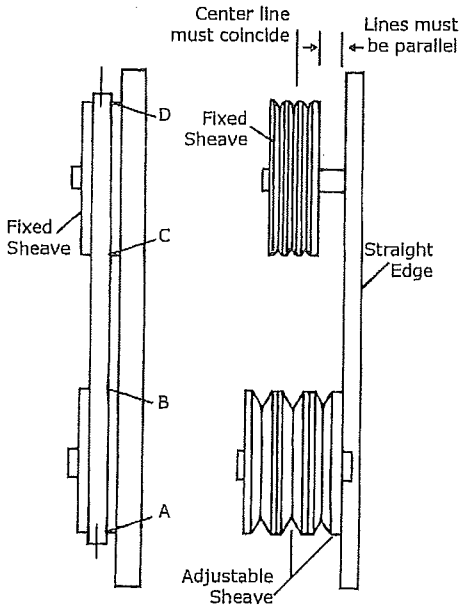

Align Fan and Motor Sheaves

Align the fan and motor sheaves using a straightedge. The straightedge must be long enough to span the distance between the outside edges of the sheaves. When the sheaves are aligned, the straightedge will touch both sheaves at points **A** through **D** (see Figure 95) to confirm the shaft is parallel. For uneven width sheaves, place a string in the center groove of both sheaves and pull tight. Adjust the sheaves and tighten the sheave set screws to the proper torque given in Table 26.

Check Multiple Belts

Tighten the belts slightly and rotate the drive several times.

On multiple belt drives, ensure the force of deflection is approximately the same on each belt by pushing each belt in an equal distance at a point halfway from each sheave (see Figure 95). If this force is not the same for each belt, the motor and fan shaft are not parallel. Realign as required. After realignment, tighten the belts again to the standard belt tensioning specifications. If the force is still not the same for all belts, the belts or sheaves are worn and must be replaced.

Table 26. Fan and drive compound torque settings (inches)

Screw Size	Hex Key	Square Head	Hex Head	Torque (in.-lb.)	Torque (ft.-lb.)
1/4	1/8	3/8	7/16	66-90	5.5-7.5
5/16	5/32	1/2	1/2	126-164	10.5-13.7
3/8	3/16	9/16	9/16	228-300	19.0-25.0
7/15	7/32	5/8	5/8	348-450	29.0-37.5
1/2	1/4	3/4	3/4	504-650	42.0-54.2
5/8	5/16	15/16	15/16	1290-1390	107.0-116.0
#10	3/32	-	-	28-40	2.3-3.3

Airflow Measuring Systems

Traq™ Dampers

Traq dampers are low-leak dampers that modulate and measure airflow. Each Traq damper section is supplied with a factory-mounted ventilation control module (VCM) on the interior of the mixing box section. The VCM has an input terminal for power and an output terminal for air velocity (see Figure 96). A direct-digital controller controls the factory-mounted and wired actuators.

Figure 96. Traq damper terminal connections

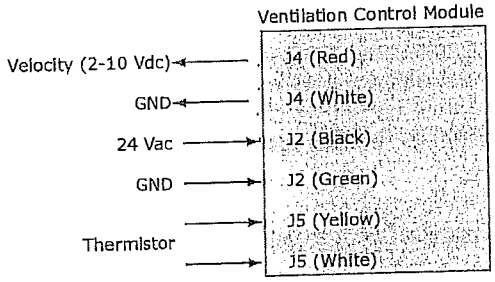

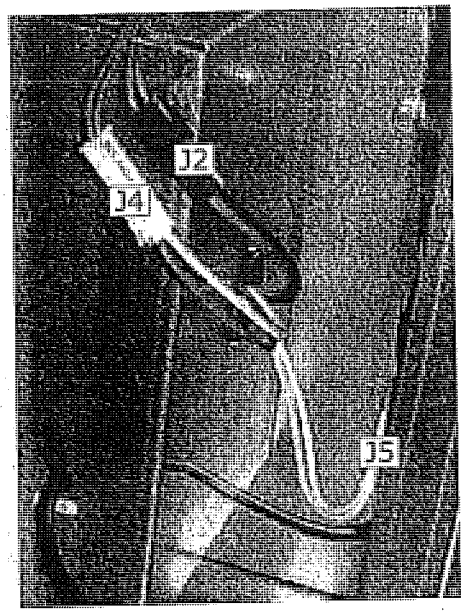

VCM (Transducer) Calibration. The VCM has an auto-zero function that recalibrates the transducer once every minute. When troubleshooting, allow for the recalibration time before making any measurements.

Input Power. The only input the VCM needs is the 24 Vac power connected to terminals 1TB1-5 and 1TB1-6.

Output Velocity Signal. The 2 to 10 Vdc linear output signal from the VCM represents air velocity. This voltage can be converted to represent airflow (cfm or L/s) using the formula below and Table 27.

$$\text{Airflow} = k\ (\text{cfm @ 10V}) \left[\frac{(\text{volts}-2)}{8}\right]$$

or

$$\text{Airflow} = k\ (\text{L/s @ 10V}) \left[\frac{(\text{volts}-2)}{8}\right]$$

For example, if the VCM on a size 30 air handler at sea level (k=1) has a 10-volt signal, it would represent 24,492 cfm (11,559 L/s) through the Traq damper. If the voltage were 6 volts, airflow through the Traq damper would be 12,246 cfm (5779 L/s).

Table 27. Altitude adjustment factors

Sea level = 1.0	
Elevation (feet)	k
1000	0.982
2000	0.964
3000	0.949
4000	0.930
5000	0.914
6000	0.897
7000	0.876
8000	0.860
9000	0.846
10,000	0.825

In Table 28 through Table 31, the cfm at 10Vdc is a calculated value based on area and peak velocity. In certain situations, it can be advantageous to raise the velocity of air through the remaining Traq dampers by closing off one or more dampers in the unit. The cfm at 10Vdc can be recalculated based on the proportion of remaining Traq dampers or by multiplying the remaining area of dampers by peak velocity.

Table 28. Back or top inlet standard Traq dampers- air mixing and indoor economizer section-VCM voltage versus airflow at sea level

Unit Size	Part Number	Traq Damper Size (inches)	Quantity	Peak Velocity (fpm)	Total Area (ft^2)	CFM @ 10VDC Peak Velocity	L/s @ 10VDC Peak Velocity
3	50182901	13	1	2475	0.92	2279	1076
4 6	50182901	13	2	2475	1.84	4559	2151
8 10	50182901	13	3	2475	2.76	6838	3227
12 14 17	50182902	16	3	2475	4.19	10365	4891
21 25	50182924	20	3	2600	6.54	17012	8028
30 35 40	50182903	24	3	2600	9.42	24492	11558
50 57	50182904	28	3	2600	12.83	33358	15742
66	50182904	28	4	2600	17.10	44460	20981
80	50182904	28	5	2600	21.38	55588	26232
100 120	50182904	28	6	2600	25.66	66716	31483

Table 29. Side Inlet Standard Traq Dampers - Diagonal Economizer Section - VCM voltage versus airflow at sea level

Unit size	Part number	Traq damper size (in)	Quantity	Peak velocity (fpm)	Total area (ft2)	CFM@10VDC peak velocity	L/s@10VDC peak velocity
3			1		0.92	2279	1076
4 6 8	50182901	13	2	2475	1.84	4559	2151
10 12 14	50182902	16	2	2475	2.79	6905	3259
17	50182901	13	4	2475	3.68	9118	4303
21	50182924	20	2	2600	4.36	11341	5352
25	50182902	16	4	2475	5.58	13820	6522
30	50182924	20	3	2600	6.54	17012	8028
35 40	50182904	28	2	2600	8.55	22224	10488
50	50182903	24	3	2600	9.42	24492	11558
57	50182903	24	4	2600	12.56	32656	15410
66	50182904	28	3	2600	12.82	33336	15731
80	50182904	28	4	2600	17.10	44448	20975
100 120	50182904	28	5	2600	21.37	55561	26219

Table 30. Side inlet low-flow Traq dampers - diagonal economizer section - VCM voltage versus airflow at sea level

Unit size	Part number	Traq damper size (in)	Quantity	Peak velocity (fpm)	Total area (ft2)	CFM@10VDC peak velocity	L/s@10VDC peak velocity	Unit size
4			Min. Outside Air	1		0.92	2279	1076
			Economizing	1		0.92	2279	1076
6	50182901	13	Min. Outside Air	1	2475	0.92	2279	1076
			Economizing	1		0.92	2279	1076
8			Min. Outside Air	1		0.92	2279	1076
			Economizing	1		0.92	2279	1076
10			Min. Outside Air	1		1.40	3455	1630
			Economizing	1		1.40	3455	1630
12	50182902	16	Min. Outside Air	1	2475	1.40	3455	1630
			Economizing	1		1.40	3455	1630
14			Min. Outside Air	1		1.40	3455	1630
			Economizing	1		1.40	3455	1630
17	50182901	13	Min. Outside Air	1	2475	0.92	2279	1076
			Economizing	3		2.76	6838	3227
21	50182924	20	Min. Outside Air	1	2600	2.18	5671	2676
			Economizing	1		2.18	5671	2676
25	50182902	16	Min. Outside Air	1	2600	1.40	3630	1713
			Economizing	3		4.19	10889	5138
30	50182924	20	Min. Outside Air	1	2600	2.18	5671	2676
			Economizing	2		4.36	11341	5352
35			Min. Outside Air	1		4.27	11112	5244
	50182904	28	Economizing	1	2600	4.27	11112	5244
40			Min. Outside Air	1		4.27	11112	5244
			Economizing	1		4.27	11112	5244
50	50182903	24	Min. Outside Air	1	2600	3.14	8164	3853
			Economizing	2		6.28	16328	7705
57	50182903	24	Min. Outside Air	1	2600	3.14	8164	3853
			Economizing	3		9.42	24492	11558
66	50182904	28	Min. Outside Air	1	2600	4.27	11112	5244
			Economizing	2		8.55	22224	10488
80	50182904	28	Min. Outside Air	1	2600	4.27	11112	5244
			Economizing	3		12.82	33336	15731
100			Min. Outside Air	1		4.27	11112	5244
	50182904	28	Economizing	4	2600	17.10	44448	20975
120			Min. Outside Air	1		4.27	11112	5244
			Economizing	4		17.10	44448	20975

Table 31. Back or top inlet low-flow Traq dampers - air-mixing and indoor economizer sections - VCM voltage versus airflow at sea level

Unit Size	Part Number	Traq Damper Size (in)	Damper Type	Quantity	Peak Velocity (fpm)	Total Area (ft^2)	CFM @ 10VDC Peak Velocity	L/s @ 10VDC Peak Velocity
4	50182901	13	Min. Outside Air	1	2475	0.92	2279	1076
			Economizing	1		0.92	2279	1076
6	50182901	13	Min. Outside Air	1	2475	0.92	2279	1076
			Economizing	1		0.92	2279	1076
8	50182901	13	Min. Outside Air	1	2475	0.92	2279	1076
			Economizing	2		1.84	4554	2149
10	50182901	13	Min. Outside Air	1	2475	0.92	2279	1076
			Economizing	2		1.84	4554	2149
12	50182902	16	Min. Outside Air	1	2475	1.40	3455	1630
			Economizing	2		2.79	6910	3261
14	50182902	16	Min. Outside Air	1	2475	1.40	3455	1630
			Economizing	2		2.79	6910	3261
17	50182902	16	Min. Outside Air	1	2475	1.40	3455	1630
			Economizing	2		2.79	6910	3261
21	50182924	20	Min. Outside Air	1	2600	2.18	5671	2676
			Economizing	2		4.36	11341	5352
25	50182924	20	Min. Outside Air	1	2600	2.18	5671	2676
			Economizing	2		4.36	11341	5352
30	50182903	24	Min. Outside Air	1	2600	3.14	8164	3853
			Economizing	2		6.28	16328	7705
35	50182903	24	Min. Outside Air	1	2600	3.14	8164	3853
			Economizing	2		6.28	16328	7705
40	50182903	24	Min. Outside Air	1	2600	3.14	8164	3853
			Economizing	2		6.28	16328	7705
50	50182904	28	Min. Outside Air	1	2600	4.27	11112	5244
			Economizing	2		8.55	22224	10488
57	50182904	28	Min. Outside Air	1	2600	4.27	11112	5244
			Economizing	2		8.55	22224	10488
66	50182904	28	Min. Outside Air	1	2600	4.27	11112	5244
			Economizing	3		12.82	33336	15731
80	50182904	28	Min. Outside Air	1	2600	4.27	11112	5244
			Economizing	4		17.10	44448	20975
100	50182904	28	Min. Outside Air	1	2600	4.27	11112	5244
			Economizing	5		8.55	22224	10488
120	50182904	28	Min. Outside Air	1	2600	4.27	11112	5244
			Economizing	5		21.37	55561	26219

Trane utilizes AMCA certification for airflow measuring stations. Trane certifies that the Traq damper herein is licensed to bear the AMCA seal. The ratings shown are based on tests and procedures performed in accordance with AMCA Publication 611 and comply with the requirements of the AMCA Certified Ratings Program.

The certification program provides the engineer and owner assurance that manufacturer-published performance ratings for airflow measurement stations are accurate and repeatable. Trane Traq dampers are certified with the integral ventilation control module which converts differential pressure to an electronic signal for control.

Refer to Performance Climate Changer Air Handler catalog CLCH-PRC015-EN for Traq damper testing and rating information.

Fan Inlet Airflow Measuring System

Figure 97. Piezometer airflow measurement

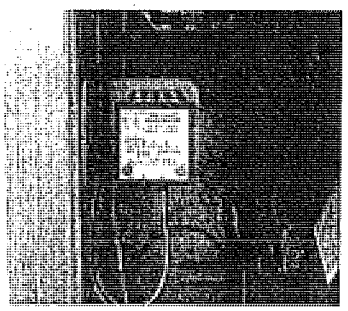

A fan inlet airflow measuring system with a piezometer ring is available on many centrifugal and plenum fans. Each system comes with a differential pressure transmitter. The piezometer ring is connected to the LO port of the transmitter and the reference pressure point is connected to (or actually is) the HI port of the transmitter.

Wiring

The transmitter requires 24VDC power on terminals 1 (+) and 2 (ground) on the transmitter. When the piezometer airflow measurement is ordered with a factory-mounted MP580 controller, the 24 VDC power will be supplied.

In the absence of a factory-provided MP580 controller, the installing contractor must ensure the transmitter has 24VDC power.

Note: *Ensure that the transmitter has a separate power source.*

Transmitter Calibration

The transmitter is factory-calibrated to a specific pressure range with a 0-20 inch w.g. range being used in most cases. To check calibration and to adjust if necessary, consult the transmitter manufacturer or the factory for specific procedures.

The transmitter outputs a linear, 2-10 VDC signal representing a differential pressure measurement. With this measurement, the airflow through the fan can be calculated using the following equation:

CFM = K * SQRT(DP)
Where:
CFM = Airflow (ft^3/min.) assuming a standard air density of 0.075 lbm/ft^3.
K = A constant factor that is unique for each fan. See next section for more information.
DP = Differential pressure (inches w.g.) being measured by the transmitter.

Significant differences in elevation and/or temperature will affect the density of air. For air at a constant, non-standard density, a field-obtained K factor can be used. Alternatively, the following equation can be used to continuously correct the equation above:

ACFM = CFM * SQRT(0.075/ρ)
Where:
ACFM = Actual airflow (ft^3/min.) corrected for non-standard air density.
ρ = Density (lbm/ft^3) of the air at the inlet to the fan.

Note: *Alternative units, including SI, can be used in place of the IP units above although the K-factor must be converted appropriately.*

Constant Factor K

The constant factor K is unique for each fan and is primarily a function of the area and the geometry of the fan inlet. Pre-engineered factors are available from the factory for fan types where the airflow measurement system is available. See Table 32.

Table 32. Constant K Factors

Fan Size (Inches)/Type	Fan Class	Fan Name	K-Factor
9 BC	Class I	9 BA	935.0
9 BC	Class II	9 BB	868.2
10 BC	Class I	10 BA	1072.5
10 BC	Class II	10 BB	1072.5
12 AF	Class I	12 AA	2337.5
12 AF	Class II	12 AB	2237.3
15 AF	Class I	15 AA	3873.6
15 AF	Class II	15 AB	3873.6
18 AF	Class I	18 AA	4675.0
18 AF	Class II	18 AB	4675.0
20 AF	Class I	20 AA	5843.7
20 AF	Class II	20 AB	5119.9
22 AF	Class I	22 AA	7513.4
22 AF	Class II	22 AB	6624.1
25 AF	Class I	25 AA	9683.9
25 AF	Class II	25 AB	8891.1
28 AF	Class I	28 AA	12856.2
28 AF	Class II	28 AB	11795.0
32 AF	Class I	32 AA	16295.6
32 AF	Class II	32 AB	16295.6
36 AF	Class I	36 AA	19701.7
36 AF	Class II	36 AB	19367.8
40 AF[1]	Class I	40 AA	23374.9
40 AF[2]	Class II	40 AA	25378.4
40 AF[1]	Class I	40 AB	22974.2
40 AF[2]	Class II	40 AB	25044.5
44 AF	Class I	44 AA	30113.0
44 AF	Class II	44 AA	30113.0
49 AF	Class I	49 AB	37470.0
49 AF	Class II	49 AB	37470.0
20 FC	Class I	20 FA	7300.0
20 FC	Class II	20 FB	7203.9
22 FC	Class I	22 FA	9081.9
22 FC	Class II	22 FB	8793.1
25 FC	Class I	25 FA	12030.0
25 FC	Class II	25 FB	11700.0
28 FC	Class I	28 FA	14450.0
28 FC	Class II	28 FB	14036.0

Note: [1]To be used for fan rpm < 700 or cfm < 25,500. [2]To be used for fan rpm > 700 or cfm > 25,500

Table 32. Constant K Factors

Fan Size (inches)/Type	Fan Class	Fan Name	K-Factor
32 FC	Class I	32 FA	20400.0
32 FC	Class II	32 FB	20150.0
36 FC	Class I	36 FA	28049.9
36 FC	Class II	36 FB	27549.0
40 FC	Class I	40 FA	39236.4
40 FC	Class II	40 FB	38067.7
10 BC belt-drive plenum	Class I or II	10 PA or 10 PB	563.0
11 BC belt-drive plenum	Class I or II	11PA or 11 PB	703.0
12 AF belt-drive plenum	Class I or II	12PA or 12 PB	1168.7
14 AF belt-drive plenum	Class I or II	14PA or 14 PB	1536.1
16 AF belt-drive plenum	Class I or II	16PA or 16 PB	1870.
18 AF belt-drive plenum	Class I or II	18PA or 18 PB	2270.7
20 AF belt-drive plenum	Class I or II	20PA or 20 PB	2905.2
22 AF belt-drive plenum	Class I or II	22PA or 22 PB	3673.2
25 AF belt-drive plenum	Class I or II	25PA or 25 PB	4608.2
28 AF belt-drive plenum	Class I or II	28 PA or 28 PB	6277.8
32 AF belt-drive plenum	Class I or II	32 PA or 32 PB	7847.3
36 AF belt-drive plenum	Class I or II	36 PA or 36 PB	10017.8
40 AF belt-drive plenum	Class I or II	40 PA or 40 PB	13023.1
44 AF belt-drive plenum	Class I or II	44 PA or 44 PB	14692.8
49 AF belt-drive plenum	Class I or II	49 PA or 49 PB	18299.2
55 AF belt-drive plenum	Class I or II	55 PA or 55 PB	23901.0
63 AF belt-drive plenum	Class I or II	63 PA or 63 PB	31135.0
10.5 AF direct-drive plenum	Class II	10 NF or 10 NW	630
13.5 AF direct-drive plenum	Class II	13 NR or 13 NF	952
15 AF direct-drive plenum	Class II	15 NR or 15 NF	1139
18 AF direct-drive plenum	Class II	18 NR or 18 NF	1673
20 AF direct-drive plenum	Class II	20 NR or 20 NF	1942
22 AF direct-drive plenum	Class II	22 NR, 22 NF, or 22 NW	2454
24 AF direct-drive plenum	Class II	24 NR, 24 NF, or 24 NW	3010
27 AF direct-drive plenum	Class II	27 NR or 27 NF	3701
30 AF direct-drive plenum	Class II	30 NR or 30 NF	4620
22 AF stacked direct-drive plenum	Class II	22 SF or 22 SW	2849
24.5 AF stacked direct-drive plenum	Class II	24 SF or 24 SW	4765

Note: (1) to be used for fan rpm < 700 or cfm < 25,500. (2) to be used for fan rpm > 700 or cfm > 25,500

Field-obtained factors can provide maximum accuracy. To obtain the factor in the field, measure the differential pressure output from the transmitter while measuring the airflow through the system. Once these two values have been measured, simply solve for K using the following equation:

K = ACFM/SQRT(DP)
Where:
K = Field-provided constant factor.
ACFM = Actual airflow (ft^3/min.) being measured at the air density being measured.
DP = Differential pressure (inches w.g.) being measured by the transmitter.

External Insulating Requirements

The following areas should be specifically addressed, as applicable:

- Supply and return water piping connections
- Supply and return refrigerant piping connections
- Condensate drain lines and connections
- Outdoor-air-intake duct connections
- Discharge duct connections
- Special requirements for low-temperature-air systems

Troubleshooting

This section is intended to be used as a diagnostic aid only. For detailed repair procedures, contact your local Trane service representative.

⚠ WARNING
Hazardous Service Procedures!

The maintenance and troubleshooting procedures recommended in this section of the manual could result in exposure to electrical, mechanical or other potential safety hazards. Always refer to the safety warnings provided throughout this manual concerning these procedures. When possible, disconnect all electrical power including remote disconnect and discharge all energy storing devices such as capacitors before servicing. Follow proper lockout/tagout procedures to ensure the equipment cannot be inadvertently energized. When necessary to work with live electrical components, have a qualified licensed electrician or other individual who has been trained in handling live electrical components perform these tasks. Failure to follow all of the recommended safety warnings provided, could result in death or serious injury.

Table 33. Air handler troubleshooting recommendations

Symptom	Probable Cause	Recommended Action
Bearing is excessively hot	First start after relubrication (Grease distribution)	Allow machine to cool down and restart.
	Over-lubrication	Clean surface of grease and purge.
	Over tensioned belts	Adjust belt tension.
	No lubricant	Apply lubricant. Check bearings for damage.
	Misaligned bearing	Correct alignment. Check shaft level.
Motor fails to start	Blown fuse or open circuit breaker	Replace fuse or reset circuit breaker.
	Overload trip	Check and reset overload.
	Improper wiring or connections	Check wiring with diagram supplied on unit.
	Improper current supply	Compare actual supply power with motor nameplate recommendations. Contact power company for adjustments.
	Mechanical failure	Check that motor and drive rotate freely. Check bearing lubricant.
Motor stalls	Open phase	Check line for an open phase.
	Overloaded motor	Reduce load or replace with larger motor.
	Low line voltage	Check across AC line. Correct voltage if possible.
Excessive vibration	Poor alignment	Align bearing set screws (see Table 26 on page 108). Loosen and retighten bearing set screws.
	Shipping spacers not removed	Remove shipping spacers and/or bolts (see "Fan Isolation" on page 61).
	Over tensioned belts	Adjust belt tension.
	Misaligned drive	Align drive.
Motor runs and then dies down	Partial loss of line voltage	Check for loose connections. Determine adequacy of main power supply.
	Starter shorts when motor warms up	Replace starter.
Motor does not come up to speed	Low voltage at motor terminals	Check across AC line and correct voltage loss if possible.
	Line wiring to motor too small	Replace with larger sized wiring.
Motor overheats	Overloaded motor	Reduce load or replace with a larger motor.
	Motor fan is clogged with dirt preventing proper ventilation	Remove fan cover, clean fan and replace cover.
Excessive motor noise	Motor mounting bolts loose	Tighten motor mounting bolts.
	Rigid coupling connections	Replace with flexible connections.
	Worn motor bearings	Replace bearings and seals.
	Fan rubbing on fan cover	Remove interference in motor fan housing.
Rapid motor bearing wear	Excessive overhung load due to overtensioned drive	Check belt tension and overhung load.
	Excessive overhung load due to a small diameter motor sheave	Replace sheave with larger one.
Loose fan belt	Motor is poorly positioned	Adjust belt tension.
	Worn or damaged belt	Replace belt or belt set. Check sheave alignment.
	Worn sheaves	Replace sheaves.

Table 33. Air handler troubleshooting recommendations

Symptom	Probable Cause	Recommended Action
Short belt life	Worn sheaves	Replace sheaves.
	Misaligned belt	Realign drive with MVP sheave set at mean pitch diameter.
	Grease or oil on belts	Check for leaky bearings. Clean belts and sheaves.
	Belt slipping	Improper belt tension. Adjust tension.
	Belts rubbing	Remove obstruction or realign drive for clearance.
Bearing noise	Poor alignment	Loosen bearing set screws and realign (see the "Align Fan and Motor Sheaves" section on page 108)
	Failed bearing	Replace bearing.
	Inadequate lubrication	Replace bearing.
Low water coil capacity	Incorrect airflow	Check fan operating condition.
	Incorrect water flow	Inspect the water pumps and valves for proper operation and check the lines for obstructions.
	Incorrect water temperature	Adjust the chiller or boiler to provide the proper water temperature.
	Coil is piped incorrectly	Verify coil piping (see the "Coil Piping and Connections" section on page 79).
	Dirty fin surface	Clean the fin surface (see the "Coils" section on page 124).
	Incorrect glycol mixture	Verify glycol mixture and adjust if necessary.
Low refrigerant coil capacity	Incorrect airflow	Check fan operating condition.
	Expansion valve is not operating properly or is sized incorrectly	Check sensing bulb temperature. Verify valve operation. Verify proper valve size.
	Incorrect refrigerant charge	Verify refrigerant charge and adjust if necessary.
	Condensing unit failure	Verify condensing unit operation.
	Coil is piped incorrectly	Verify coil piping (see the "Coil Piping and Connections" section on page 79.)
	Clogged refrigerant line filter	Change filter core.
	Failure of suction/liquid line components	Verify component operation
	Dirty fin surface	Clean the fin surface (see the "Coils" section on page 124). Do not use steam to clean refrigerant coils.
	Fin frosting	Verify defrost cycle operation. Verify frostat operation. Verify refrigerant charge.
Low steam coil capacity	Incorrect airflow	Check fan operating condition.
	Coil is piped incorrectly	Verify coil piping (see the "Coil Piping and Connections" section on page 79).
	Incorrect steam pressure	Verify steam pressure and adjust if necessary.
	Excessive steam superheat	Check steam superheat. Steam superheat should not exceed 50°F.
	Failure of steam line/condensate return components	Verify component operation
	Boiler failure	Verify boiler operation
	Dirty fin surface	Clean the fin surface (see the "Coils" section on page 124).
Drain pan is overflowing	Plugged Drain Line	Clean drain line
	Unit not level	Level unit
	Improper trap design	Design trap per unit installation instructions
Standing water in drain pan	Improper trap design	Design trap per unit installation instructions
	Unit not level	Level unit
	Plugged drain line	Clean drain line
Wet interior	Coil face velocity too high	Reduce fan speed
	Improper trap design	Design trap per unit installation instructions
	Drain pan leaks/overflows	Repair leaks
	Condensation on surfaces	Insulate surfaces.
Excess dirt in unit	Missing filters	Replace filters
	Filter bypass	Reduce filter bypass by ensuring all blockoffs are in place.
Microbial growth (mold) inside air handler	Standing water in drain pan	See "Standing water in drain pan" above

Routine Maintenance

The following checklist is provided as an abbreviated guide to periodic maintenance. Detailed procedural information is given after this checklist.

⚠ WARNING

Hazardous Service Procedures!

The maintenance and troubleshooting procedures recommended in this section of the manual could result in exposure to electrical, mechanical or other potential safety hazards. Always refer to the safety warnings provided throughout this manual concerning these procedures. When possible, disconnect all electrical power including remote disconnect and discharge all energy storing devices such as capacitors before servicing. Follow proper lockout/tagout procedures to ensure the equipment cannot be inadvertently energized. When necessary to work with live electrical components, have a qualified licensed electrician or other individual who has been trained in handling live electrical components perform these tasks. Failure to follow all of the recommended safety warnings provided, could result in death or serious injury.

⚠ WARNING

Rotating Components!

Disconnect all electric power, including remote disconnects before servicing. Follow proper lockout/ tagout procedures to ensure the equipment can not be inadvertently energized. Secure drive sheaves to ensure rotor cannot freewheel. Failure to secure drive sheaves or disconnect power before servicing could result in death or serious injury.

Maintenance Checklist

Table 34. Maintenance Checklist

Frequency	Maintenance
After 48 hours of operation	Belts have acquired their permanent set. Readjust but do not overtighten. See "Tension the Fan Belt" on page 106 for more information.
Every week	Observe unit weekly for any change in running condition and unusual noise.
Every month	• Clean or replace air filters if clogged or dirty; coat permanent filters with oil after cleaning; change bag filters when pressure drop is 1 in. wg. See "Air Filters" on page 121 for more information. • Relubricate fan bearings if necessary. See "Fan Bearing Lubrication" on page 123 for more information. • Check and adjust fan belt tension.
Every three to six months	• Check fan bearing grease line connections. Lines should be tight to the bearings. • Check bearing and motor bracket bolt torque and bearing setscrew torque. • Align fan and motor sheaves. Tighten sheave set screws to the proper torque. See "Align Fan and Motor Sheaves" on page 108 for more information. • Inspect and clean drain pans. See "Drain Pans" on page 121 for more information. • Tighten electrical connections. • Inspect coils for dirt build-up. See "Coils" on page 124 for more information.
Every year	• Inspect the unit casing for corrosion. If damage is found, clean and repaint. • Clean the fan wheels and fan shaft. See "Fans" on page 122 for more information. • Inspect and clean drain pans. • Check damper linkages, set screws, and blade adjustment. Clean, but do not lubricate, the nylon damper rod bushings. • Clean damper operators. • Inspect electrical components and insulation. • Inspect wiring for damage. • Rotate the fan wheel and check for obstructions in the fan housing. The wheel should not rub on the fan housing. Adjust the center if necessary and tighten wheel set screws to the proper torque. • Lubricate motor bearings in accordance with motor manufacturer's recommendations (see "Fan Bearing Lubrication" on page 123 for more information). • Check condition of gasketing and insulation around unit, door and dampers. • Examine flex connections for cracks or leaks. Repair or replace damaged material.

Air Filters

⚠ WARNING
Rotating Components!

Disconnect all electric power, including remote disconnects before servicing. Follow proper lockout/ tagout procedures to ensure the equipment cannot be inadvertently energized. Secure drive sheaves to ensure rotor cannot freewheel. Failure to secure drive sheaves or disconnect power before servicing could result in death or serious injury.

Refer to product catalog for filter sizes, types, and quantities.

Throwaway Filters

To replace throwaway filters, install new filters with the directional arrows pointing in the direction of airflow.

Note: *Bag and cartridge filters must have an airtight seal to prevent air bypass. If using filters not supplied by Trane, apply foam gasketing to the vertical edges of the filter.*

Permanent Filters

To clean permanent filters:

1. Disconnect all electrical power to the unit.
2. Wash the filter under a stream of water to remove dirt and lint.
3. Remove oil from the filter with a wash of mild alkali solution.
4. Rinse the filter in clean, hot water and allow to dry.
5. Coat both sides of the filter by immersing or spraying it with Air Maze Filter Kote W or an equivalent.
6. Allow to drain and dry for about 12 hours.
7. Reinstall the filter.

Note: *It may be preferable to keep extra, clean filters to replace the dirty filters to minimize unit downtime for filter maintenance.*

Cartridge or Bag Filters

To replace cartridge or bag filters:

1. Disconnect all electrical power to the unit.
2. Remove the dirty filters from their installed position.
3. Keeping the new bag filters folded, slide each filter into the filter rack, pushing them tightly against the unit.

Note: *The pleats should be in the vertical position.*

4. If using the optional pre-filters, replace them on the appropriate filter rack.
5. Close and secure the access door.

Drain Pans

⚠ WARNING
Hazardous Voltage!

Disconnect all electric power, including remote disconnects before servicing. Follow proper lockout/tagout procedures to ensure the power can not be inadvertently energized. Failure to disconnect power before servicing could result in death or serious injury.

⚠ WARNING
No Step Surface!

Do not walk on the sheet metal drain pan. Walking on the drain pan could cause the supporting metal to collapse. Failure of the drain pan could result in death or serious injury.

The condensate drain pan and drain line must be checked to assure the condensate drains as designed. This inspection should occur a minimum of every six months or more often as dictated by operating experience.

If evidence of standing water or condensate overflow exists, identify and remedy the cause immediately. Refer to "Troubleshooting" on page 118 for possible causes and solutions.

To clean drain pans:

1. Disconnect all electrical power to the unit.
2. Wearing the appropriate personal protective equipment, remove any standing water.
3. Scrape solid matter off of the drain pan.
4. Vacuum the drain pan with a vacuum device that uses high-efficiency particulate arrestance (HEPA) filters with a minimum efficiency of 99.97 percent at 0.3 micron particle size.
5. Thoroughly clean any contaminated area(s) with a mild bleach and water solution or an EPA-approved sanitizer specifically designed for HVAC use.
6. Immediately rinse the affected surfaces thoroughly with fresh water and a fresh sponge to prevent potential corrosion of metal surfaces.
7. Allow the unit to dry completely before putting it back into service.
8. Be careful any contaminated material does not contact other areas of the unit or building. Properly dispose of all contaminated materials and cleaning solution.

Fans

Inspecting and Cleaning Fans

⚠ WARNING
Rotating Components!

Disconnect all electric power, including remote disconnects before servicing. Follow proper lockout/ tagout procedures to ensure the equipment cannot be inadvertently energized. Secure drive sheaves to ensure rotor cannot freewheel. Failure to secure drive sheaves or disconnect power before servicing could result in death or serious injury.

Fan sections of air handlers should be inspected every six months at a minimum or more frequently if operating experience dictates. If evidence of microbial growth (mold) is found, identify and remedy the cause immediately. Refer to "Troubleshooting" on page 118 for possible causes and solutions. To clean the fan section:

1. Disconnect all electrical power to the unit.
2. Wearing the appropriate personal protective equipment, remove any contamination.
3. Vacuum the section with a vacuum device that uses high-efficiency particulate arrestance (HEPA) filters with a minimum efficiency of 99.97 percent at 0.3 micron particle size.
4. Thoroughly clean any contaminated area(s) with a mild bleach and water solution or an EPA-approved sanitizer specifically designed for HVAC use.
5. Immediately rinse the affected surfaces thoroughly with fresh water and a fresh sponge to prevent potential corrosion of metal surfaces.
6. Allow the unit to dry completely before putting it back into service.

7. Be careful any contaminated material does not contact other areas of the unit or building. Properly dispose of all contaminated materials and cleaning solution.

Bearing Set Screw Alignment

Figure 98. Alignment

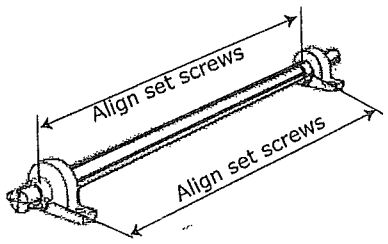

Align bearing set screws as illustrated in Figure 98. Table 10 on page 64 provides bearing set screw torque measurements.

Fan Bearing Lubrication

NOTICE:
Bearing Failure!

Do not mix greases with different bases within the bearing. Mixing grease within the bearing could result in premature bearing failure.

The grease used in electric motor bearings is usually not compatible with the grease used in fan bearings. Never mix the two grease types! See Table 35 for compatible greases and Table 36 for maximum grease capacity.

Note: *Lubricate the bearing according to the motor manufacturer's recommendations and use the manufacturer-recommended grease.*

- Fan bearings without lubrication lines are sealed bearings. Re-lubrication is not required.
- Fan bearings equipped with lubrication lines should be lubricated with a lithium-based grease that conforms to NLGI No. 2 for consistency.

Table 35. Compatible Greases

Type
Texaco Multi Fak 2
Shell Alvania 2
Mobil 532
Chevron Dura-Lith 2
Exxon Beacon
Keystone 84H

Table 36. Fan bearing maximum grease capacity

Shaft size (inches)	Capacity (fluid ounce)
1/2 - 3/4	1/7
7/8 - 1 3/16	3/8
1 1/4 - 1 1/2	5/8
1 11/16 - 1 15/16	7/8
2 - 2 7/16	1 1/4
2 1/2 - 2 15/16	2

Refer to Table 37 for minimum torque of motor mounting and bearings bolts.

Table 37. Minimum hex head bolt torque in lb.-ft. (Grade 5 bolts)

Size (inches)	Thread Designation	Minimum Torque
1/4-20	UNC	6
1/4-28	UNF	7
65/16-18	UNC	14
5/16-24	UNF	16
3/8-16	UNC	24
3/8-24	UNF	28
7/16-14	UNC	42
7/16-20	UNF	45
1/2-13	UNC	69
1/2-20	UNF	83
9/16-12	UNC	99
9/16-18	UNF	118
5/8-11	UNC	150
5/8-18	UNF	176
3/4-10	UNC	254
3/4-16	UNF	301
7/8-9	UNC	358
7/8-14	UNF	422
1-8	UNC	500
1-14	UNF	602

Note: Soft metric conversions are not acceptable for screw and hex sizes.

Motor Bearing Lubrication

Obtain an IOM from the motor manufacturer for the specific motor installed. The motor manufacturer's recommendations take precedence for all matters related to the start-up and routine maintenance of the motor.

Motor grease fittings have been removed from factory-installed motors in compliance with UL regulations. Motor bearings require periodic maintenance throughout their life. Many different styles of motors come as standard selections, so please obtain the motor IOM and use the manufacturer-recommended grease.

Fan Motor Inspection

Inspect fan motors periodically for excessive vibration or temperature.

Coils

All coils should be kept clean to maintain maximum performance.

Steam and Water Coils

⚠ WARNING

Hazardous Chemicals!

Coil cleaning agents can be either acidic or highly alkaline. Handle chemical carefully. Proper handling should include goggles or face shield, chemical resistant gloves, boots, apron or suit as required. For personal safety refer to the cleaning agent manufacturer's Materials Safety Data Sheet and follow all recommended safe handling practices. Failure to follow all safety instructions could result in death or serious injury.

⚠ WARNING
Hazardous Voltage!

Disconnect all electric power, including remote disconnects before servicing. Follow proper lockout/tagout procedure to ensure the power cannot be inadvertently energized. Failure to disconnect power before servicing could result in death or serious injury.

To clean steam and water coils:

1. Disconnect all electrical power to the unit.
2. Wearing the appropriate personal protective equipment, use a soft brush to remove loose debris from both sides of the coil.
3. Install a block-off to prevent spray from going through the coil and into a dry section of the unit and/or system ductwork.
4. Mix a high-quality coil cleaning detergent with water according to the manufacturer's instructions.

Note: *If the detergent is strongly alkaline after mixing (PH 8.5 or higher), it must contain an inhibitor. Follow the cleaning solution manufacturer's instructions regarding the use of the product.*

5. Place the mixed solution in a garden pump-up sprayer or high-pressure sprayer. If a high pressure sprayer is to be used:
   - Maintain minimum nozzle spray angle of 15 degrees.
   - Spray perpendicular to the coil face.
   - Keep the nozzle at least 6 inches from the coil.
   - Do *not* exceed 600 psi.
6. Spray the leaving air side of the coil first, then the entering air side.
7. Thoroughly rinse both sides of the coil and the drain pan with cool, clean water.
8. Repeat steps 6 and 7 as necessary.
9. Straighten any coil fins that may have been damaged during the cleaning process.
10. Confirm the drain line is open following the cleaning process.
11. Allow the unit to dry thoroughly before putting it back into service.
12. Replace all panels and parts and restore electrical power to the unit.
13. Be careful any contaminated material does not contact other areas of the unit or building. Properly dispose of all contaminated materials.

Refrigerant Coils

⚠ WARNING
Hazardous Pressures!

Coils contain refrigerant under pressure. When cleaning coils, maintain coil cleaning solution temperature under 150°F to avoid excessive pressure in the coil. Failure to follow these safety precautions could result in coil bursting, which could result in death or serious injury.

⚠ WARNING
Hazardous Chemicals!

Coil cleaning agents can be either acidic or highly alkaline. Handle chemical carefully. Proper handling should include goggles or face shield, chemical resistant gloves, boots, apron or suit as required. For personal safety refer to the cleaning agent manufacturer's Materials Safety Data Sheet and follow all recommended safe handling practices. Failure to follow all safety instructions could result in death or serious injury.

⚠ WARNING
Hazardous Voltage!

Disconnect all electric power, including remote disconnects before servicing. Follow proper lockout/tagout procedure to ensure the power cannot be inadvertently energized. Failure to disconnect power before servicing could result in death or serious injury.

To clean refrigerant coils:

1. Disconnect all electrical power to the unit.
2. Wearing the appropriate personal protective equipment, use a soft brush to remove loose debris from both sides of the coil.
3. Install a block-off to prevent spray from going through the coil and into a dry section of the unit and/or system ductwork.
4. Mix a high-quality coil cleaning detergent with water according to the manufacturer's instructions.

Note: *If the detergent is strongly alkaline after mixing (PH 8.5 or higher), it must contain an inhibitor. Follow the cleaning solution manufacturer's instructions regarding the use of the product.*

5. Place the mixed solution in a garden pump-up sprayer or high-pressure sprayer. If a high pressure sprayer is to be used:
   a. Maintain minimum nozzle spray angle of 15 degrees.
   b. Spray perpendicular to the coil face.
   c. Keep the nozzle at least 6 inches from the coil.
   d. Do *not* exceed 600 psi.
6. Spray the leaving air side of the coil first, then the entering air side.
7. Thoroughly rinse both sides of the coil and the drain pan with cool, clean water.
8. Repeat steps 6 and 7 as necessary.
9. Straighten any coil fins damaged during the cleaning process.
10. Confirm the drain line is open following the cleaning process.
11. Allow the unit to dry thoroughly before putting it back into service.
12. Replace all panels and parts and restore electrical power to the unit.
13. Be careful any contaminated material does not contact other areas of the unit or building. Properly dispose of all contaminated materials and cleaning solution.

Coil Winterization

Water coil winterization procedures consist primarily of draining water from the coil before the heating season. Trane recommends flushing the coil with glycol if coils will be exposed to temperatures below 35 degrees.

NOTICE:
Coil Freeze-up!

Properly drain and vent coils when not in use. Trane recommends glycol protection in all possible freezing applications. Use a glycol approved for use with commercial cooling and heating systems and copper tube coils. Failure to do so could result in equipment damage.

Install field-fitted drains and vents to permit winterization of coils not in use and to assist in evacuating air from the water system during startup. If draining is questionable because of dirt or scale deposits inside the coil, fill the coil with glycol before the heating season begins.

Individual coil types determine how to properly winterize the coil. To determine the coil type find the "Service Model No of Coil" on the coil section nameplate. The coil type is designated by the second and third digits on that model number. For example, if the model number begins with "DUWB," the coil type is UW; if the model number begins with "DW0B," the coil type is W.

Note: *On many unit sizes, there are multiple coils in the coil section. Be sure to winterize all coils in a given coil section.*

Type D1, D2, WL, LL, UA, UW, UU, W, P2, P4, P8, WD, 5D, and 5W Coils

Note: *Use care in removing header plugs from Type P2, P4, and P8 coils. Over-torquing may result in twisted tubes.*

1. Remove the vent and drain plugs.
2. Blow the coil out as completely as possible with compressed air.
3. Fill and drain the coil several times with full strength glycol so that it mixes thoroughly with the water retained in the coil.
4. Drain the coil out as completely as possible.
5. To ensure no water remains in the coil, do not replace the vent and drain plugs until the coils are put back into service.

Moisture Purge Cycle

By it's very nature, any HVAC unit with a cooling coil serves as a dehumidifier, reducing the surrounding air's ability to hold water vapor as its temperature falls. This normally doesn't present a problem when the unit is running. However, when the fan stops, water vapor condenses on the cold metal surfaces inside the air handler and remains there until the air warms sufficiently to re-evaporate it. This damp, dark environment—though temporary—can encourage the growth of mold, mildew, and other microbial contaminants.

Providing a moisture purge cycle 15 to 30 minutes after shutdown disperses the cold, humid air inside the air-handling system more evenly throughout the building. This four-step cycle:

- Closes the outdoor air dampers.
- Turns off the cooling coil.
- Opens any variable-air-volume terminals connected to the air handler.
- Operates the supply fan for 10 to 15 minutes.

Air movement discourages water condensation and hastens re-evaporation of any condensate that does happen to form. This simple preventative measure effectively combats microbial growth and curbs moisture-related deterioration of air-handling components.

Cleaning Non-Porous Surfaces

⚠ WARNING
Hazardous Voltage!

Disconnect all electric power, including remote disconnects before servicing. Follow proper lockout/tagout procedures to ensure the equipment cannot be inadvertently energized. Failure to disconnect power before servicing could result in death or serious injury.

If microbial growth on a non-porous insulating surface (closed cell insulation or sheet metal surface) is observed:

1. Disconnect all electrical power to the unit.
2. Wearing the appropriate personal protective equipment, use a brush for sheet metal surfaces or a soft sponge on a foil face or closed cell foam surface to mechanically remove the microbial growth.

Note: *Be careful not to damage the non-porous surface of the insulation.*

3. Install a block-off to prevent spray from going into a dry section of the unit and/or system ductwork.
4. Thoroughly clean the contaminated area(s) with an EPA-approved sanitizer specifically designed for HVAC use.
5. Rinse the affected surfaces thoroughly with fresh water and a fresh sponge to prevent potential corrosion of the drain pan and drain line
6. Repeat steps 4 and 5 as necessary.
7. Confirm the drain line is open following the cleaning process.
8. Allow the unit to dry thoroughly before putting it back into service.
9. Replace all panels and parts and restore electrical power to the unit.
10. Be careful any contaminated material does not contact other areas of the unit or building. Properly dispose of all contaminated materials and cleaning solution.

Cleaning Porous Surfaces

⚠ WARNING

Hazardous Voltage!

Disconnect all electric power, including remote disconnects before servicing. Follow proper lockout/tagout procedures to ensure the equipment cannot be inadvertently energized. Failure to disconnect power before servicing could result in death or serious injury.

To clean a porous insulating surface (fiberglass insulation):

1. Disconnect all electrical power to the unit.
2. Wearing the appropriate personal protective equipment, use a vacuum device with a HEPA filter (99.97 percent efficient at 0.3 micron particles) to remove the accumulated dirt and organic matter.

Note: *Be careful not to tear the insulation surface or edges.*

3. Confirm the drain line is open following the cleaning process.
4. Allow the unit to dry thoroughly before putting it back into service.
5. Replace all panels and parts and restore electrical power to the unit.
6. Be careful any contaminated material does not contact other areas of the unit or building. Properly dispose of all contaminated materials and cleaning solution.

Ultraviolet (UV) Light Maintenance

The intensity of the ultraviolet energy emitted from the ultraviolet bulbs is dependent on the cleanliness and age of the bulb. The surface of the bulb should be kept as clean as possible for optimum intensity. Depending on the filtration level of the HVAC system and the general hygiene of the building, periodic cleaning may be necessary. Before attempting any maintenance procedures, always follow all warnings and cautions as detailed in this maintenance section.

⚠ WARNING

Hazardous Voltage and Exposure to Ultraviolet Radiation!

If UV lights are present in this unit, it contains components that emit high-intensity ultraviolet (UV-C) radiation which can be harmful to unprotected eyes and skin. Disconnect all electrical power, including remote disconnects before servicing. Follow proper lockout/tagout procedures to ensure the equipment cannot be inadvertently energized. Failure to disconnect power before servicing could result in death or serious injury.

1. Disconnect power to the HVAC unit and the ultraviolet bulbs.
2. Wearing soft cloth gloves and safety glasses, use two hands and firmly grasp the bulb at each end.
3. Rotate the bulb 90 degrees in either direction and move bulb away from the fixture and out of unit.
4. Carefully install a new replacement bulb in the fixture and rotate it 90 degrees in either direction until it is firmly secured.
5. If broken bulbs are found or if you are required to dispose of used bulbs, follow the warning and caution below.

⚠ WARNING

Hazardous Vapors!

If large numbers of UV bulbs are broken, an appropriate respirator should be considered to prevent inhalation of mercury vapors. Failure to use a respirator could result in death or serious injury.

⚠ CAUTION

Broken Glass!

Bulbs are fragile and can be easily broken. Always use gloves and eye protection when handling these bulbs. Failure to handle bulbs properly may result in minor to moderate injury. Refer to the MSDS sheet from the bulb manufacturer for additional safety information.

6. Always use cloth gloves and suitable eye protection when cleaning or replacing these bulbs. Bulbs may break if dropped or handled improperly.

Disposal of Bulbs

UV bulbs, like fluorescent bulbs, contain mercury, which is a regulated hazardous waste. The disposal requirements for hazardous wastes are determined by local, state and federal guidelines. Check all regulations before disposing of bulbs to assure you have met all requirements.

Refer to the MSDS sheet from the bulb manufacturer for additional disposal, handling and safety information.

After replacing bulbs, close and latch all unit panels and reenergize power to the lights.

⚠ WARNING
Hazardous Vapors!

If large numbers of UV bulbs are broken, an appropriate respirator should be considered to prevent inhalation of mercury vapors. Failure to use a respirator could result in death or serious injury.

⚠ CAUTION
Broken Glass!

Bulbs are fragile and can be easily broken. Always use gloves and eye protection when handling these bulbs. Failure to handle bulbs properly may result in minor to moderate injury. Refer to the MSDS sheet from the bulb manufacturer for additional safety information.

Cleaning the Bulbs

⚠ WARNING
Hazardous Voltage and Exposure to Ultraviolet Radiation!

If UV lights are present in this unit, it contains components that emit high-intensity ultraviolet (UV-C) radiation which can be harmful to unprotected eyes and skin. Disconnect all electrical power, including remote disconnects before servicing. Follow proper lockout/tagout procedures to ensure the equipment cannot be inadvertently energized. Failure to disconnect power before servicing could result in death or serious injury.

Note: *If bulbs are found to be broken, see the proper warnings and cautions below regarding broken bulbs and hazardous vapors.*

1. Disconnect all electrical power to the unit and the ultraviolet bulbs.
2. Wearing soft cloth gloves and safety glasses, use two hands and firmly grasp the bulb at each end.
3. Rotate the bulb 90 degrees in either direction and move bulb away from the fixture and out of unit.
4. Wipe down each bulb with a clean cloth and alcohol. Avoid touching the bulb with bare hands as skin oils can accelerate future glass soiling and degrade the bulb performance.
5. Carefully return the bulb to the fixture and rotate it 90 degrees in either direction until it is firmly secured.
6. Close and latch all unit panels and reenergize power to the lights.

Replacing the Bulbs

⚠ WARNING
Hazardous Voltage and Exposure to Ultraviolet Radiation!

If UV lights are present in this unit, it contains components that emit high-intensity ultraviolet (UV-C) radiation which can be harmful to unprotected eyes and skin. Disconnect all electrical power, including remote disconnects before servicing. Follow proper lockout/tagout procedures to ensure the equipment cannot be inadvertently energized. Failure to disconnect power before servicing could result in death or serious injury.

Ultraviolet bulbs should be replaced annually if operated continuously or after 9,000 hours of use if operated intermittently. Replacement bulbs must be the specific size and wattage as originally supplied from the factory.

Note: *Although the lights may continue to generate a characteristic blue glow beyond 9,000 operating hours, the ultraviolet radiation emitted by the bulbs degrades over time and will no longer provide the intended benefit.*

Installation Operation Maintenance

Split System Cooling Condensers

6-20 Tons (R-410A)

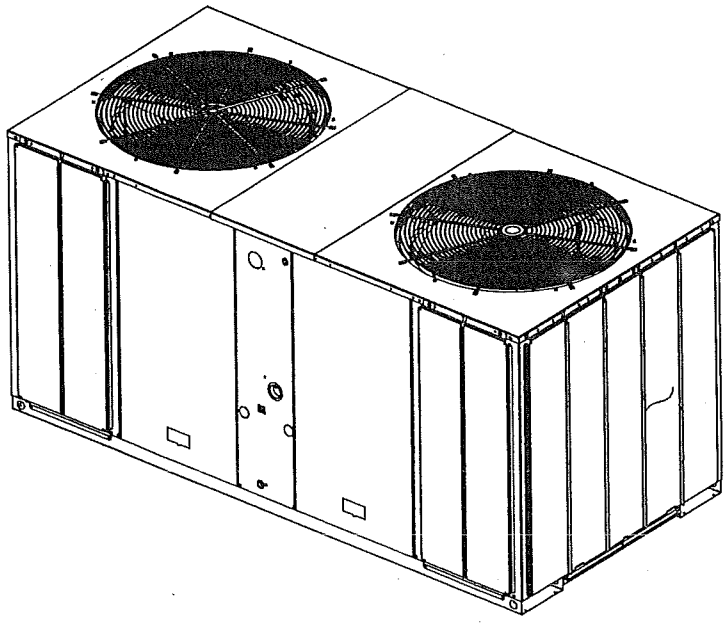

Model Numbers

(60 Hz)

TTA073D***A
TTA090D***A
TTA120D/E/F***A
TTA150E***A
TTA180E/F***A
TTA240E/F***A

(50 Hz)

TTA061D***A
TTA076D***A
TTA086D***A
TTA101D/E/F***A
TTA126E***A
TTA156E/F***A
TTA201E/F***A

November 2009

SS-SVX10A-EN

Warnings, Cautions and Notices

Warnings, Cautions and Notices. Note that warnings, cautions and notices appear at appropriate intervals throughout this manual. Warnings are provided to alert installing contractors to potential hazards that could result in personal injury or death. Cautions are designed to alert personnel to hazardous situations that could result in personal injury, while notices indicate a situation that could result in equipment or property-damage-only accidents.

Your personal safety and the proper operation of this machine depend upon the strict observance of these precautions.

ATTENTION: Warnings, Cautions and Notices appear at appropriate sections throughout this literature. Read these carefully.

⚠ **WARNING:** Indicates a potentially hazardous situation which, if not avoided, could result in death or serious injury.

⚠ **CAUTION:** Indicates a potentially hazardous situation which, if not avoided, could result in minor or moderate injury. It could also be used to alert against unsafe practices.

NOTICE: Indicates a situation that could result in equipment or property-damage only accidents.

Important Environmental Concerns!

Scientific research has shown that certain man-made chemicals can affect the earth's naturally occurring stratospheric ozone layer when released to the atmosphere. In particular, several of the identified chemicals that may affect the ozone layer are refrigerants that contain Chlorine, Fluorine and Carbon (CFCs) and those containing Hydrogen, Chlorine, Fluorine and Carbon (HCFCs). Not all refrigerants containing these compounds have the same potential impact to the environment. Trane advocates the responsible handling of all refrigerants-including industry replacements for CFCs such as HCFCs and HFCs.

Responsible Refrigerant Practices!

Trane believes that responsible refrigerant practices are important to the environment, our customers, and the air conditioning industry. All technicians who handle refrigerants must be certified. The Federal Clean Air Act (Section 608) sets forth the requirements for handling, reclaiming, recovering and recycling of certain refrigerants and the equipment that is used in these service procedures. In addition, some states or municipalities may have additional requirements that must also be adhered to for responsible management of refrigerants. Know the applicable laws and follow them.

⚠WARNING

R-410A Refrigerant under Higher Pressure than R-22!

The unit described in this manual uses R-410A refrigerant which operates at higher pressures than R-22 refrigerant. Use ONLY R-410A rated service equipment or components with this unit. For specific handling concerns with R-410A, please contact your local Trane representative. Failure to use R-410A rated service equipment or components could result in equipment or components exploding under R-410A high pressures which could result in death, serious injury, or equipment damage.

© 2009 Trane All rights reserved

⚠WARNING
Contains R-410A Refrigerant!

System contains oil and refrigerant under high pressure. Recover refrigerant to relieve pressure before opening the system. See unit nameplate for refrigerant type. Do not use non-approved refrigerants, refrigerant substitutes, or refrigerant additives. Failure to follow proper procedures or the use of non-approved refrigerants, refrigerant substitutes, or refrigerant additives could result in death or serious injury or equipment damage.

Important: *DO NOT release refrigerant to the atmosphere! If adding or removing refrigerant is required, the service technician must comply with all federal, state, and local laws.*

Important: *One copy of this document ships inside the control panel of each unit and is customer property. It must be retained by the unit's maintenance personnel.*

⚠WARNING
Personal Protective Equipment (PPE) Required!

Installing/servicing this unit could result in exposure to electrical, mechanical and chemical hazards.

- **Before installing/servicing this unit, technicians MUST put on all Personal Protective Equipment (PPE) recommended for the work being undertaken. ALWAYS refer to appropriate MSDS and OSHA guidelines for proper PPE.**
- **When working with or around hazardous chemicals, ALWAYS refer to appropriate MSDS and OSHA guidelines for information on allowable personal exposure levels, proper respiratory protection and handling recommendations.**
- **If there is a risk of arc or flash, technicians MUST put on all Personal Protective Equipment (PPE) in accordance with NFPA70E for arc/flash protection PRIOR to servicing the unit.**

Failure to follow recommendations could result in death or serious injury.

This booklet describes proper installation, operation, and maintenance procedures for air cooled systems. By carefully reviewing the information within this manual and following the instructions, the risk of improper operation and/or component damage will be minimized.

It is important that periodic maintenance be performed to help assure trouble free operation. A maintenance schedule is provided at the end of this manual. Should equipment failure occur, contact a qualified service organization with qualified, experienced HVAC technicians to properly diagnose and repair this equipment.

All phases of this installation must comply with the NATIONAL, STATE & LOCAL CODES. In addition to local codes, the installation must conform with National Electric Code -ANSI/NFPA NO. 70 LATEST REVISION.

Any individual installing, maintaining, or servicing this equipment must be properly trained, licensed and qualified.

Table of Contents

Model Number Description 6

General Information 7
- Installation Checklist 7
- Unit Inspection 7
- Inspection Checklist 7
- Initial Leak Test 7
- Lifting Recommendations 7

Pre-Installation 9
- Clearances 9
- Unit Mounting 9

Dimensional Data 11

Electrical Data 19

Installation 22
- Refrigerant Piping Guidelines 22
- Refrigerant Piping Procedures (Outdoor Units) 22
- Refrigerant Piping Procedure (Indoor Unit) 24
- Leak Check 25
- Insulating and Isolating Refrigerant Lines 26
- Refrigerant Charging Procedure 26
- Liquid Charging 28
- Electrical Wiring 29
- Unit Power Supply 29
- Field Wiring- Electromechanical Control 30
- Field Wiring- ReliaTel™ Control 31
- Field Wiring 33
- Refrigerant Circuit 34

Charging Charts 35

Pre-Start 39

Start-Up 41
- Electromechanical Controls 41
- ReliaTel™ Controls 42
- ReliaTel™ Control Cooling Mode 42

Service Test Modes ReliaTel™ Controls 44
- Test Modes 44

Troubleshooting 45
- Trouble Shooting ReliaTel™ Controls 45
- System Status Checkout Procedure 46
- Simultaneous Heat and Cool Failure 46
- Resetting Cooling and Heating Lockouts 47
- Zone Temperature Sensor (ZTS) Service Indicator 48

Programmable & Digital Zone Sensor Test 50

Maintenance 51
Monthly 51
Annually (Cooling Season) 51
Coil Cleaning 51
Maintenance Log 53

Warranty 54
For Commercial Unitary Equipment Rated Under 20 Tons and Related Accessories 54
Commercial Equipment Rated 20 Tons and Larger and Related Accessories (Parts Only) 55

Wiring Diagram Matrix 56

Model Number Description

TTA	240	F	3	00	B	A
1 2 3	4 5 6	7	8	9 10	11	12

Model Number Description

All products are identified by a multiple-character model number that precisely identifies a particular type of unit. An explanation of the alphanumeric identification code is provided. Its use will enable the owner/operator, installing contractors, and service engineers to define the operation, specific components, and other options for any specific unit.

Note: *When ordering replacement parts or requesting service, be sure to refer to the specific model number, serial number, and DL number (if applicable) stamped on the unit nameplate.*

DIGITS 1 - 3: Product Type

TTA = Split System Cooling

DIGITS 4 - 6: Nominal Gross Cooling Capacity (MBh)

073 = 6 Tons (60 Hz)
090 = 7½ Tons (60 Hz)
120 = 10 Tons (60 Hz)
150 = 12½ Tons (60 Hz)
180 = 15 Tons (60 Hz)
240 = 20 Tons (60 Hz)
061 = 5 Tons (50 Hz)
076 = 6.25 Tons (50 Hz)
086 = 7 Tons (50 Hz)
101 = 8.33 Tons (50 Hz)
126 = 10.4 Tons (50 Hz)
156 = 13.0 Tons (50 Hz)
201 = 16.7 Tons (50 Hz)

DIGIT 7: Major Development Sequence

D = Single Circuit
E = Dual Circuit
F = Manifold Scroll Compressors

DIGIT 8: Electrical Characteristics

3 = 208-230/60/3
4 = 460/60/3
W = 575/60/3
D = 380-415/50/3
K = 380/60/3

DIGITS 9 - 10: Factory Installed Options

00 = Packed Stock
0S = Black Epoxy Coated Coil
0R = ReliaTel, no LCI Board
0T = ReliaTel, no LCI Board with Black Epoxy Coated Coil
0U = ReliaTel, with LCI Board
0W = ReliaTel, with LCI Board and Black Epoxy Coated Coil
H0 = Hailguard with Packed Stock
HS = Hailguard with Black Epoxy Coated Coil
HR = Hailguard with ReliaTel, no LCI Board
HT = Hailguard with ReliaTel, no LCI Board with Black Epoxy Coated Coil
HU = Hailguard with ReliaTel, with LCI Board
HW = Hailguard with ReliaTel, with LCI Board and Black Epoxy Coated Coil

DIGITS 11: Minor Design Sequence

A & B = Current Design Sequence

DIGITS 12: Service Digit

A = Current Service Digit

General Information

Installation procedures should be performed in the sequence that they appear in this manual. Do not destroy or remove the manual from the unit. The manual should remain weather-protected and with the unit until all installation procedures are complete.

Note: *It is not the intention of this manual to cover all possible variations in systems that may occur or to provide comprehensive information concerning every possible contingency that may be encountered during an installation. If additional information is required or if specific problems arise that are not fully discussed in this manual, contact your local sales office.*

Note: *"Warnings" and "Cautions" appear at appropriate places in this manual. Your personal safety and the proper operation of this machine require that you follow them carefully. The Company assumes no liability for installations or servicing performed by unqualified personnel.*

Installation Checklist

An "Installation Checklist" is provided at the end of the installation section of this manual. Use the checklist to verify that all necessary installation procedures have been completed. Do not use the checklist as a substitute for reading the information contained in the manual. Read the entire manual before beginning installation procedures.

Unit Inspection

Inspect material carefully for any shipping damage. If damaged, it must be reported to, and claims made against the transportation company. Compare the information that appears on the unit nameplate with ordering and submittal data to insure the proper unit was shipped. Available power supply must be compatible with electrical characteristics specified on component nameplates. Replace damaged parts with authorized parts only.

Inspection Checklist

To protect against loss due to damage incurred in transit, complete the following checklist upon receipt of the unit.

1. Inspect individual pieces of the shipment before accepting the unit. Check for obvious damage to the unit or packing material.
2. Inspect the unit for concealed damage before it is stored and as soon as possible after delivery. Concealed damage must be reported within 15 days. If concealed damage is discovered, stop unpacking the shipment. Do not remove damaged material from the receiving location. Take photos of the damage if possible. The owner must provide reasonable evidence that the damage did not occur after delivery.
3. Notify the carrier's terminal of damage immediately by phone and by mail. Request an immediate joint inspection of the damage by the carrier and the consignee.
4. Notify the sales representative and arrange for repair. Do not repair the unit until the damage is inspected by the carrier's representative.

Initial Leak Test

All **TTA** units are shipped with a holding charge of nitrogen in each circuit. Remove the service panel(s) shown in Figure 3, p. 12 - Figure 9, p. 18. Locate the liquid line or suction line service valve for each circuit. Install gauges to determine if the circuits are still pressurized. If not, the charge has escaped. Repair as required to obtain a leak-free circuit.

Lifting Recommendations

Before preparing the unit for lifting, estimate the approximate center of gravity for lifting safety. Because of placement of internal components, the unit weight may be unevenly distributed. Approximate unit weights are given in Table 1 and Table 2, p. 8.

Table 1. TTA Unit and Corner Weights — kg (50 Hz)

Tons	Model No.	Shipping Max (kg)	Net Max (kg)	Corner Weights			
				1	2	3	4
5	TTA061D	164	135	38	41	20	36
6.25	TTA076D	163	134	38	40	20	36
7	TTA086D	213	181	61	47	32	41
8.33	TTA101D	210	178	60	47	31	40
	TTA101E	230	197	62	57	40	39
	TTA101F	229	197	58	63	37	39
10.4	TTA126E	244	211	59	68	36	49
13	TTA156E	383	325	93	92	68	72
	TTA156F	383	326	88	94	69	76
16.7	TTA201E	437	377	118	108	74	77
	TTA201F	435	376	116	112	69	79

Table 2. TTA Unit and Corner Weights — lbs (60 Hz)

Tons	Model No.	Shipping Max (lbs)	Net Max (lbs)	Corner Weights			
				1	2	3	4
6	TTA073D	365	300	85	90	44	81
7½	TTA090D	363	298	84	89	44	81
10	TTA120D	467	395	133	103	70	89
	TTA120E	510	438	137	127	88	86
	TTA120F	509	438	129	140	83	86
12½	TTA150E	543	468	130	151	79	108
15	TTA180E	850	723	207	204	151	161
	TTA180F	852	725	196	208	153	168
20	TTA240E	970	837	262	240	164	171
	TTA240F	966	835	257	249	153	176

⚠ WARNING

Improper Unit Lift!

Each of the cables (chains or slings) used to lift the unit must be capable of supporting the entire weight of the unit. Lifting cables (chains or slings) may not be of the same length. Adjust as necessary for even unit lift. Other lifting arrangements may cause equipment or property-only damage. Failure to properly lift unit could result in death or serious injury. Refer to Table 1 and Table 2 for unit weight.

The crated unit can be moved using a forklift of suitable capacity. For lifting the unit, attach lifting straps or slings securely to the lifting holes at each corner. Use spreader bars to protect the unit casing from damage. Test lift the unit to determine proper balance and stability.

NOTICE

Equipment Damage!

Use spreader bars to prevent lifting straps from damaging the unit. Install bars between lifting straps. This will prevent the straps from crushing the unit cabinet or damaging the unit finish.

Pre-Installation

Clearances

Provide enough space around the unit to allow unrestricted access to all service points. Refer to Figure 3, p. 12 - Figure 9, p. 18 for unit dimensions and minimum required service and free air clearances. Observe the following points to ensure proper unit operation.

1. Do not install the unit under a low overhang. Condenser discharge must not be restricted. See notes in Figure 3, p. 12 - Figure 9, p. 18.

Note: Important! Do not obstruct condenser discharge air. This can result in warm air recirculation through the coil.

2. Do not locate the unit in a position where runoff water can fall into the fan discharge openings.
3. Condenser intake air is supplied from three or four sides of the unit. Adhere to the minimum required clearances given in Figure 3, p. 12 - Figure 9, p. 18.

Unit Mounting

⚠ WARNING
Mounting Integrity!

Ensure that the roof structure supports are strong enough to support the weight of the unit and any accessories. Failure to do so could result in death or serious injury or possible equipment or property-only damage.

Rooftop Mounting

If the unit will be roof mounted, determine for certain that the structure is strong enough to support the unit and any required accessories. Unit weights are given in Table 1 and Table 2, p. 8. The unit should be elevated on a level, field fabricated four-inch steel or wood 4" x 4" mounting frame. Complete the frame and secure it into position before lifting the unit to the roof. The mounting frame must support a minimum of three of the unit's four sides and should span roof supports to distribute the load on the roof.

Figure 1. Roof Mounted Unit

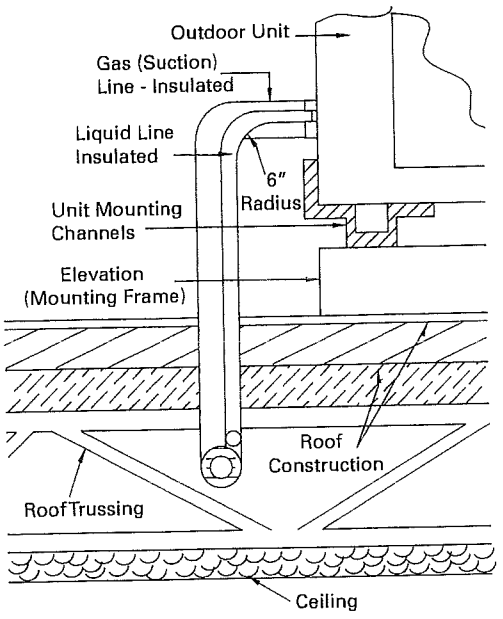

Ground Level Mounting

4. For ground level installation, the unit base should be adequately supported and hold the unit near level. The installation must meet the guidelines set forth in local codes. The support should extend two inches beyond the unit base channels at all points. The unit and support must be isolated from any adjacent structure to prevent possible noise or vibration problems. Any ground level location must comply with required clearances given in Figure 3, p. 12 - Figure 9, p. 18.

Refrigerant Piping

⚠WARNING

R-410A Refrigerant under Higher Pressure than R-22!

The unit described in this manual uses R-410A refrigerant which operates at higher pressures than R-22 refrigerant. Use ONLY R-410A rated service equipment or components with this unit. For specific handling concerns with R-410A, please contact your local Trane representative. Failure to use R-410A rated service equipment or components could result in equipment or components exploding under R-410A high pressures which could result in death, serious injury, or equipment damage.

Roof Damage!

System contains oil and refrigerant under high pressure. Roofs should be protected from exposure to oils and refrigerant in the system. If rooftop is not protected damage to the roof may occur.

Structural Preparation

Important: *Refer to local building codes for proper installation. All installation must comply with local building codes.*

Dimensional Data

Figure 2. TTA Quick Reference

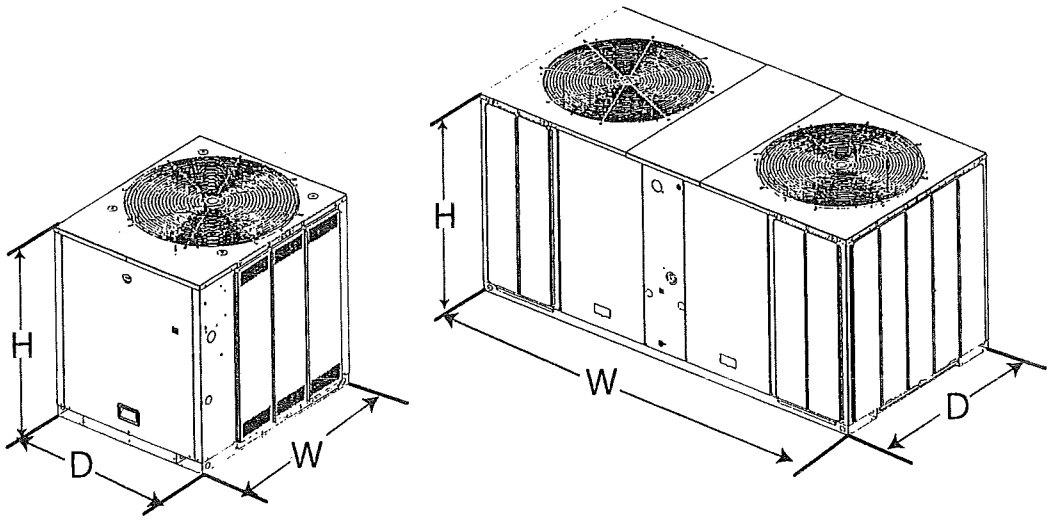

	H	W	D
TTA 061, 073, 076, 086, 090	39.125 (993.8)	42.125 (1070)	36 (914.4)
TTA101, 120	39.125 (993.8)	52.125 (1324)	40 (1016)
TTA126, 150	45.125 (1146.1)	52.125 (1324)	40 (1016)
TTA 156, 180, 201, 240	45.125 (1146.1)	95.5 (2425.7)	45.875 (1165.2)

Note: *Full dimensional data available on next pages.*

Figure 3. TTA061, 073, 076, 090 Condensing Unit, Single Compressor

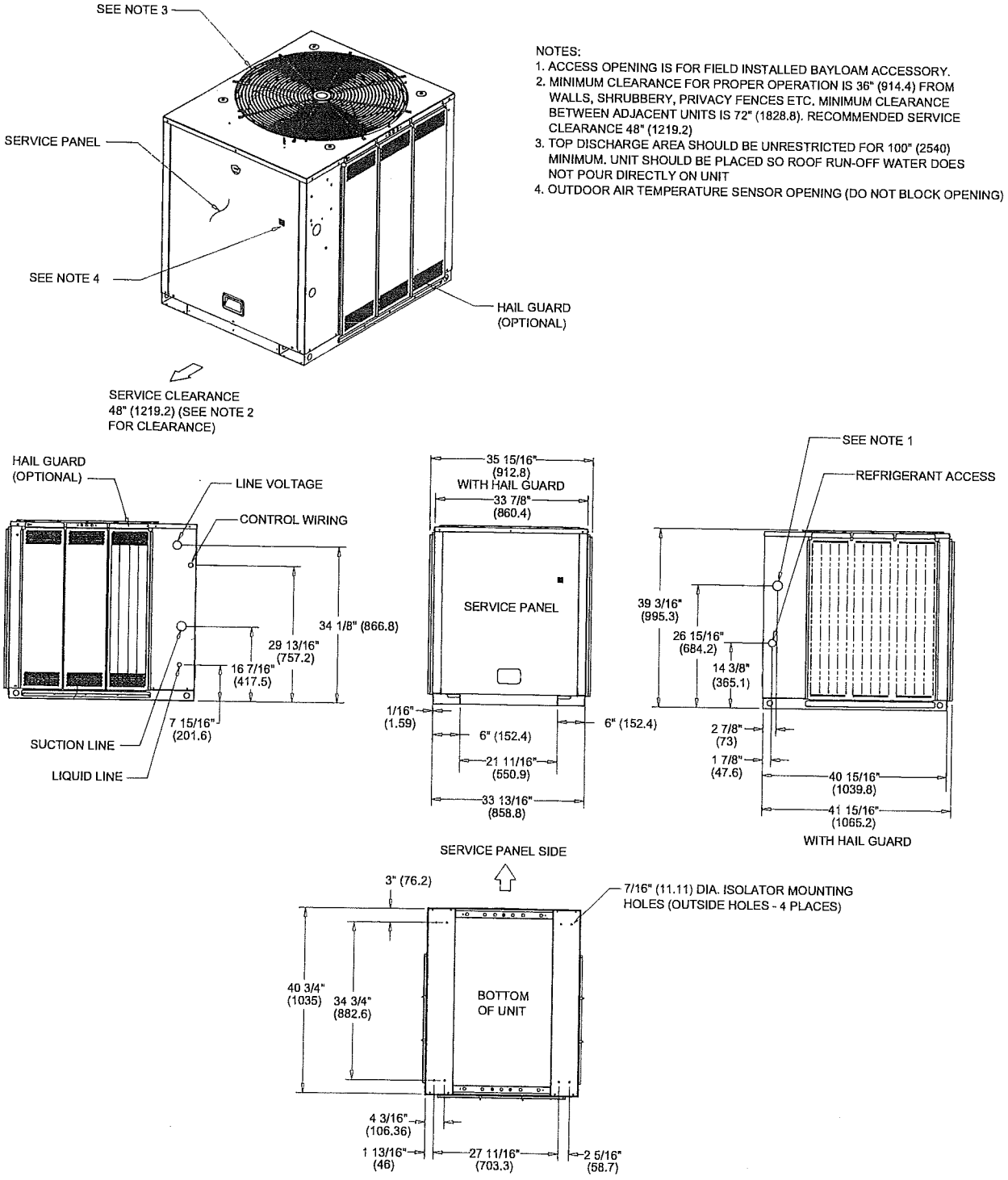

Figure 4. TTA086, 101, 120 Condensing Unit, Single Compressor

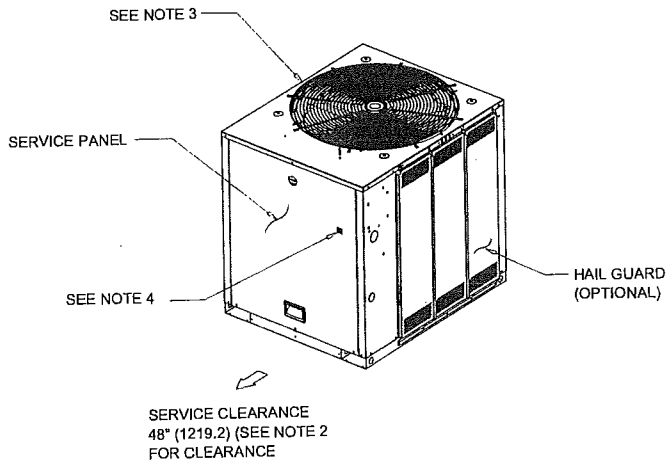

NOTES:
1. ACCESS OPENING IS FOR FIELD INSTALLED BAYLOAM ACCESSORY.
2. MINIMUM CLEARANCE FOR PROPER OPERATION IS 36" (914.4) FROM WALLS, SHRUBBERY, PRIVACY FENCES ETC. MINIMUM CLEARANCE BETWEEN ADJACENT UNITS IS 72" (1828.8). RECOMMENDED SERVICE CLEARANCE 48" (1219.2)
3. TOP DISCHARGE AREA SHOULD BE UNRESTRICTED FOR 100" (2540) MINIMUM. UNIT SHOULD BE PLACED SO ROOF RUN-OFF WATER DOES NOT POUR DIRECTLY ON UNIT
4. OUTDOOR AIR TEMPERATURE SENSOR OPENING (DO NOT BLOCK OPENING)

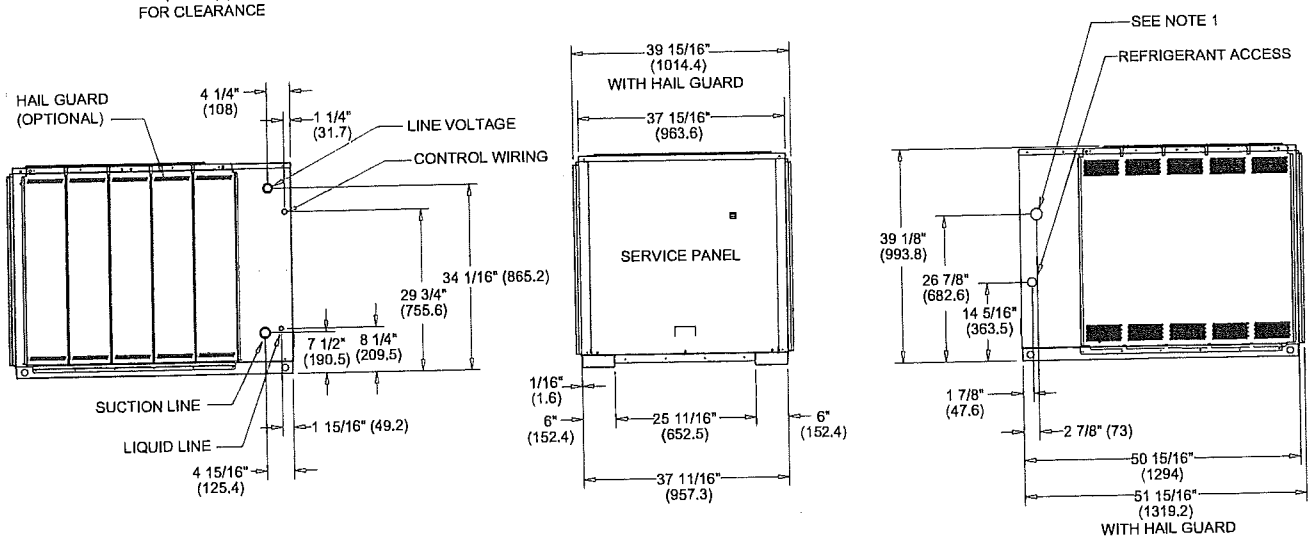

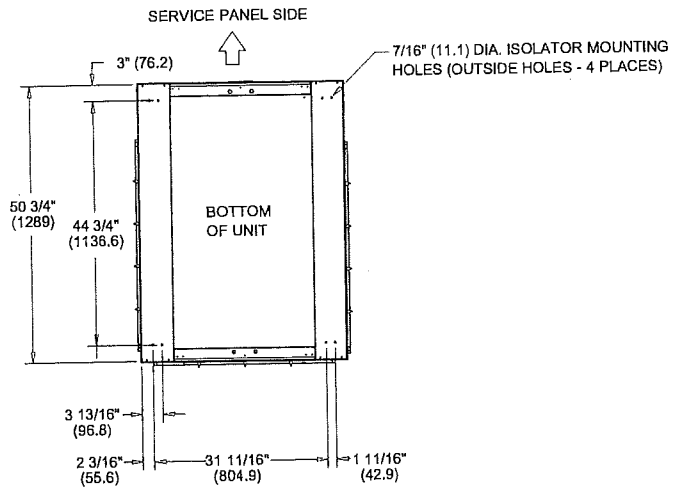

Figure 5. TTA101, 120 Condensing Unit, Dual Compressor

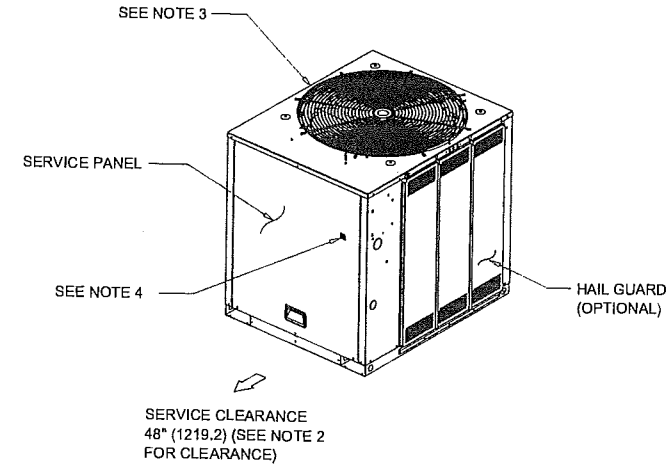

NOTES:
1. ACCESS OPENING IS FOR FIELD INSTALLED BAYLOAM ACCESSORY.
2. MINIMUM CLEARANCE FOR PROPER OPERATION IS 36" (914.4) FROM WALLS, SHRUBBERY, PRIVACY FENCES ETC. MINIMUM CLEARANCE BETWEEN ADJACENT UNITS IS 72" (1828.8), RECOMMENDED SERVICE CLEARANCE 48" (1219.2)
3. TOP DISCHARGE AREA SHOULD BE UNRESTRICTED FOR 100" (2540) MINIMUM. UNIT SHOULD BE PLACED SO ROOF RUN-OFF WATER DOES NOT POUR DIRECTLY ON UNIT
4. OUTDOOR AIR TEMPERATURE SENSOR OPENING (DO NOT BLOCK OPENING).

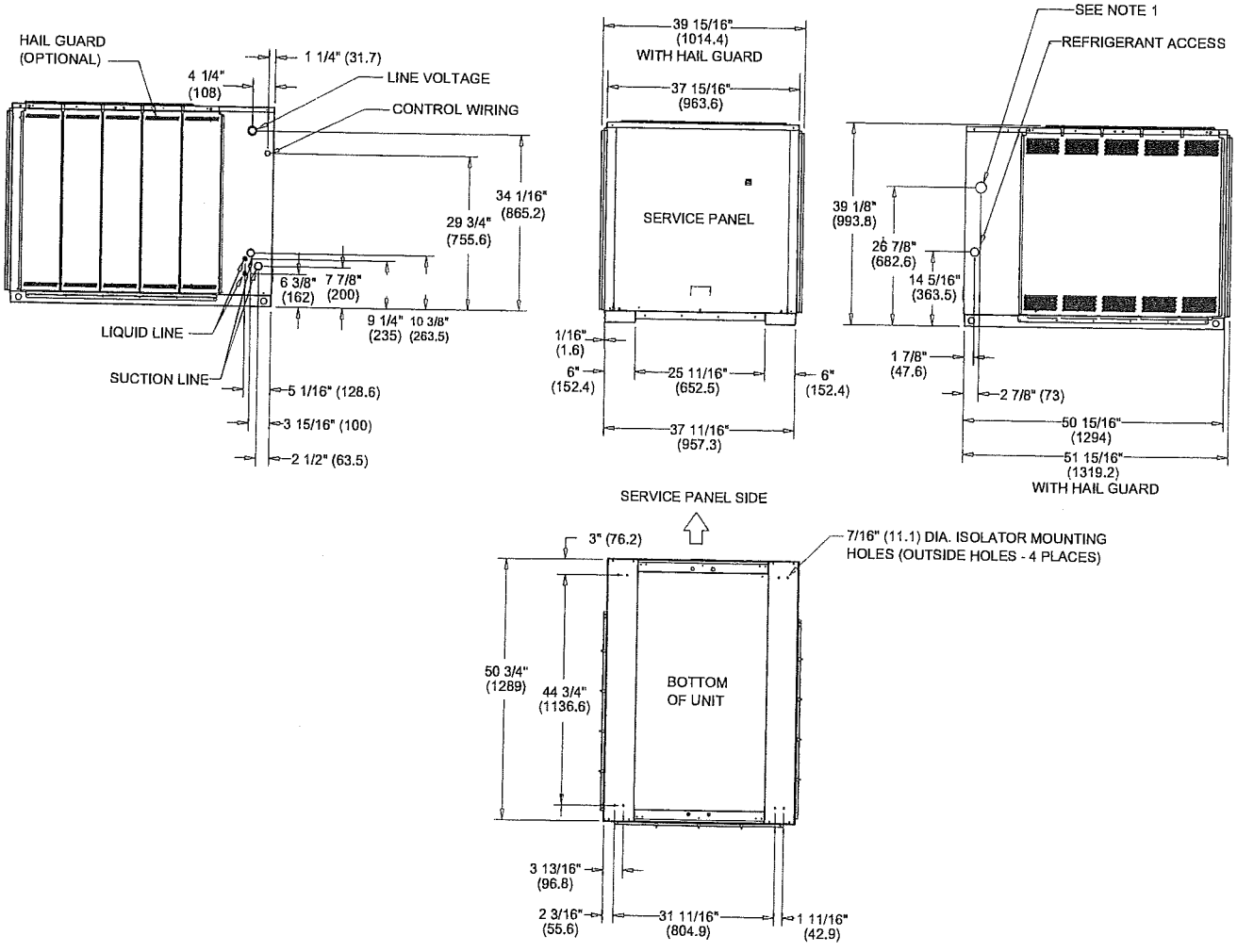

Figure 6. TTA101, 120 Condensing Unit, Manifolded Compressor

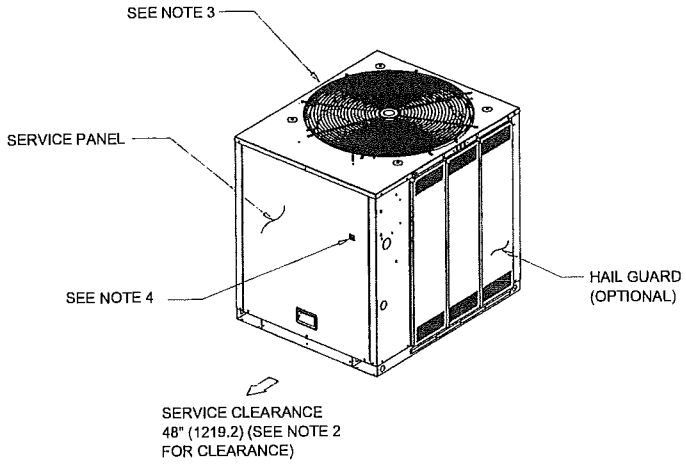

NOTES:
1. ACCESS OPENING IS FOR FIELD INSTALLED BAYLOAM ACCESSORY.
2. MINIMUM CLEARANCE FOR PROPER OPERATION IS 36" (914.4) FROM WALLS, SHRUBBERY, PRIVACY FENCES ETC. MINIMUM CLEARANCE BETWEEN ADJACENT UNITS IS 72" (1828.8). RECOMMENDED SERVICE CLEARANCE 48" (1219.2)
3. TOP DISCHARGE AREA SHOULD BE UNRESTRICTED FOR 100" (2540) MINIMUM. UNIT SHOULD BE PLACED SO ROOF RUN-OFF WATER DOES NOT POUR DIRECTLY ON UNIT
4. OUTDOOR AIR TEMPERATURE SENSOR OPENING (DO NOT BLOCK OPENING)

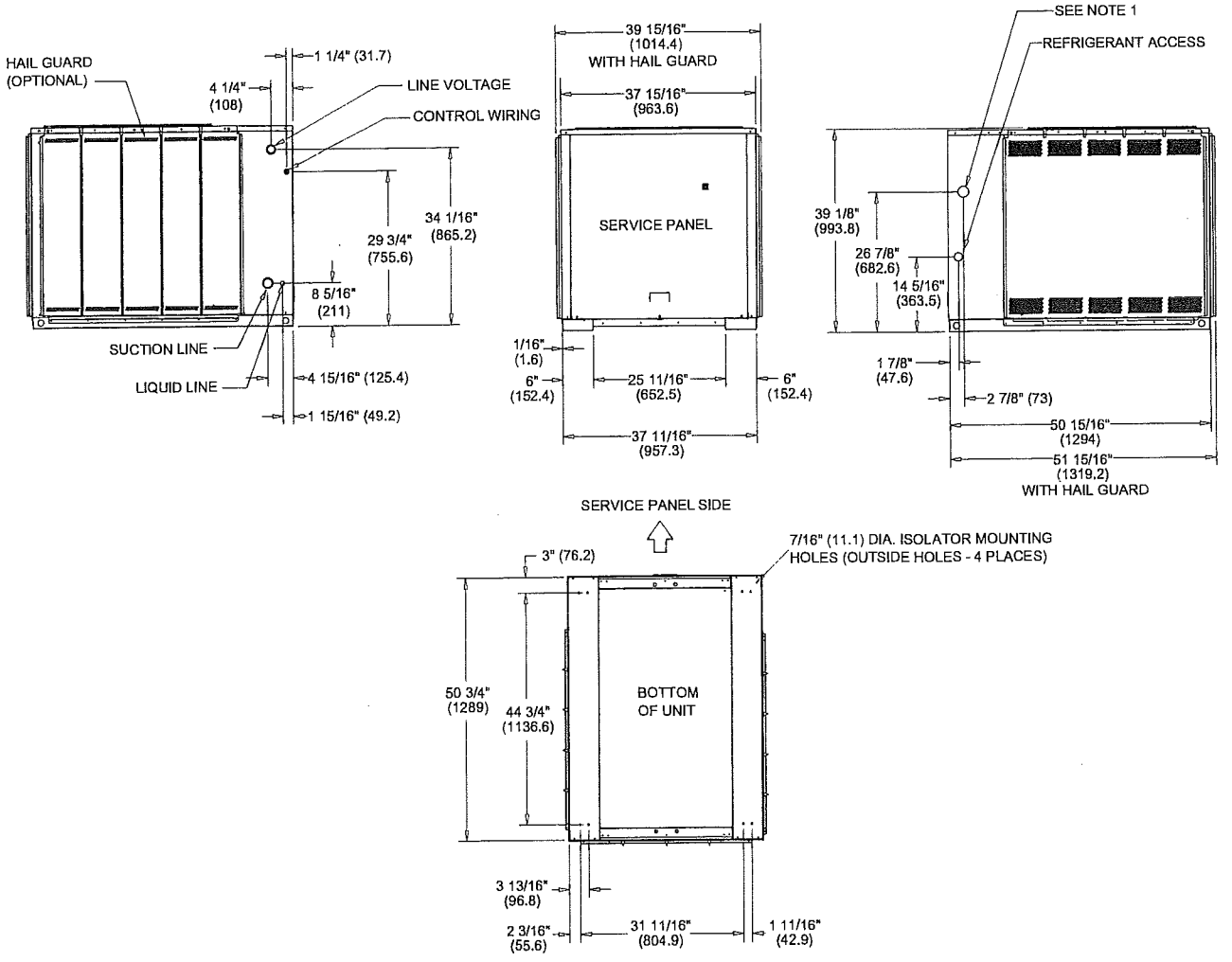

Figure 7. TTA126, 150 Condensing Unit, Dual Compressor

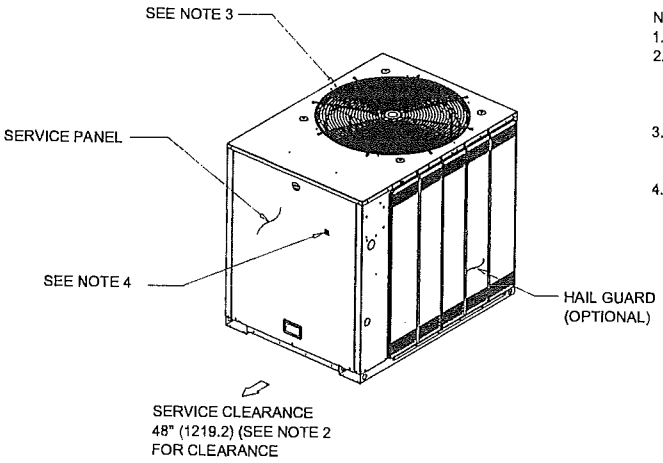

NOTES:
1. ACCESS OPENING IS FOR FIELD INSTALLED BAYLOAM ACCESSORY.
2. MINIMUM CLEARANCE FOR PROPER OPERATION IS 36" (914.4) FROM WALLS, SHRUBBERY, PRIVACY FENCES ETC. MINIMUM CLEARANCE BETWEEN ADJACENT UNITS IS 72" (1828.8). RECOMMENDED SERVICE CLEARANCE 48" (1219.2)
3. TOP DISCHARGE AREA SHOULD BE UNRESTRICTED FOR 100" (2540) MINIMUM. UNIT SHOULD BE PLACED SO ROOF RUN-OFF WATER DOES NOT POUR DIRECTLY ON UNIT
4. OUTDOOR AIR TEMPERATURE SENSOR OPENING (DO NOT BLOCK OPENING).

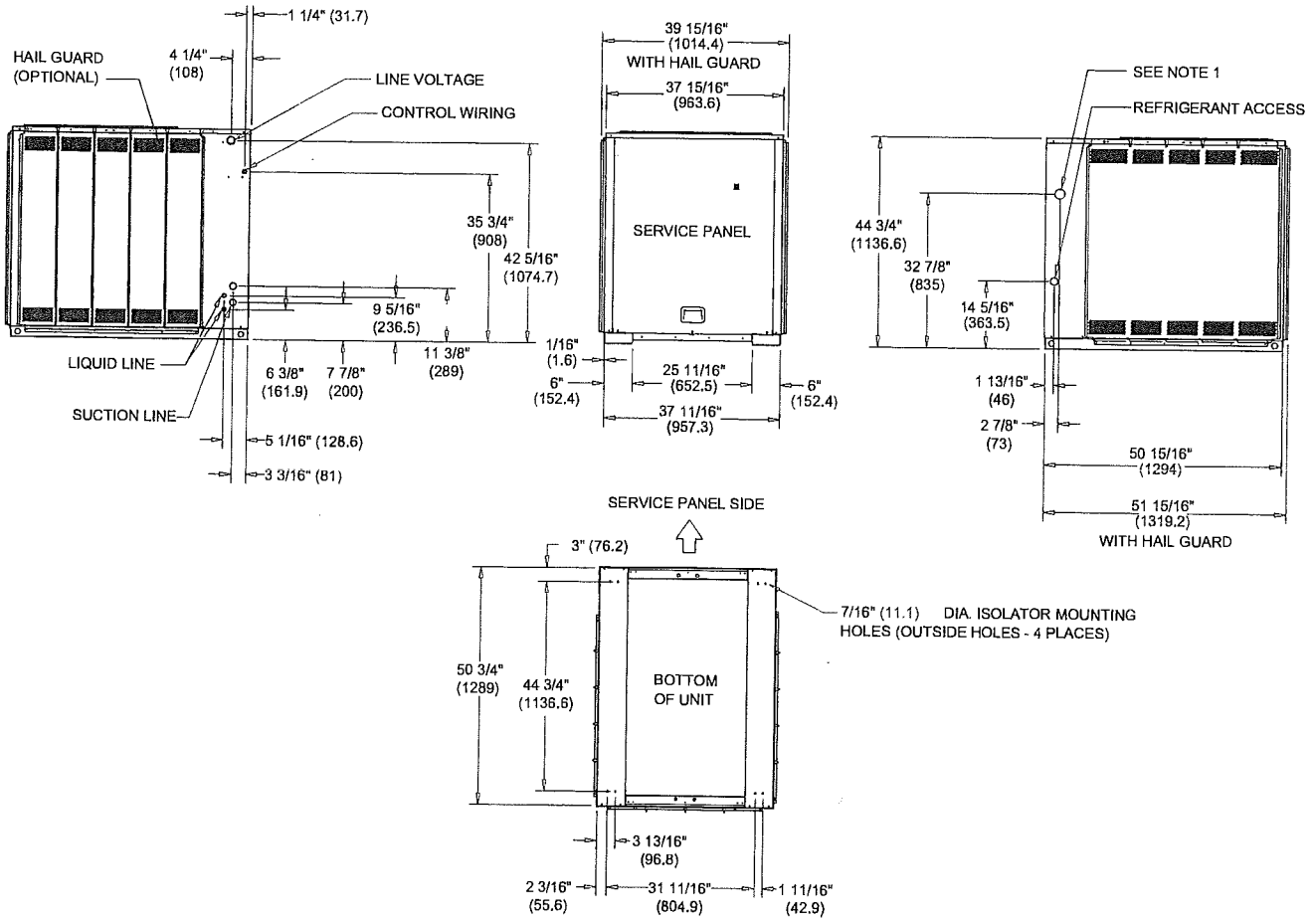

Figure 8. TTA156, 180, 201, 240 Condensing Unit, Dual Compressor

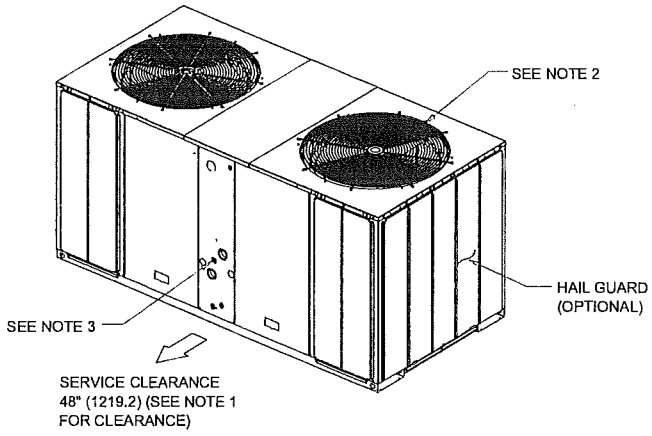

NOTES:
1. MINIMUM CLEARANCE FOR PROPER OPERATION IS 36" (914.4) FROM WALLS, SHRUBBERY, PRIVACY FENCES ETC. MINIMUM CLEARANCE BETWEEN ADJACENT UNITS IS 72" (1828.8). RECOMMENDED SERVICE CLEARANCE 48" (1219.2)
2. TOP DISCHARGE AREA SHOULD BE UNRESTRICTED FOR 100" (2540) MINIMUM. UNIT SHOULD BE PLACED SO ROOF RUN-OFF WATER DOES NOT POUR DIRECTLY ON UNIT
3. OUTDOOR AIR TEMPERATURE SENSOR OPENING (DO NOT BLOCK OPENING)

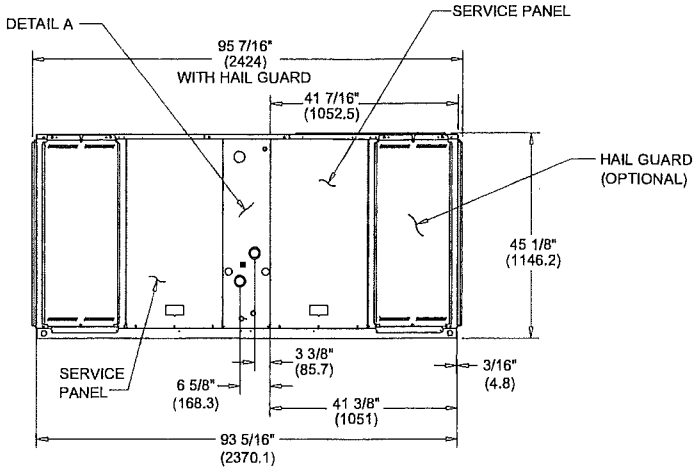

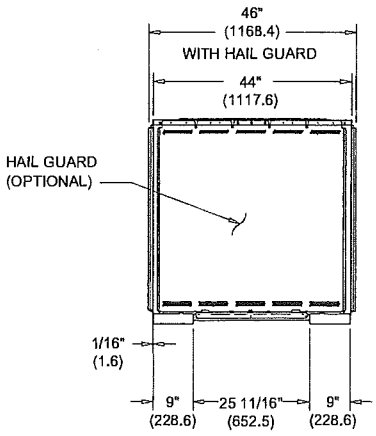

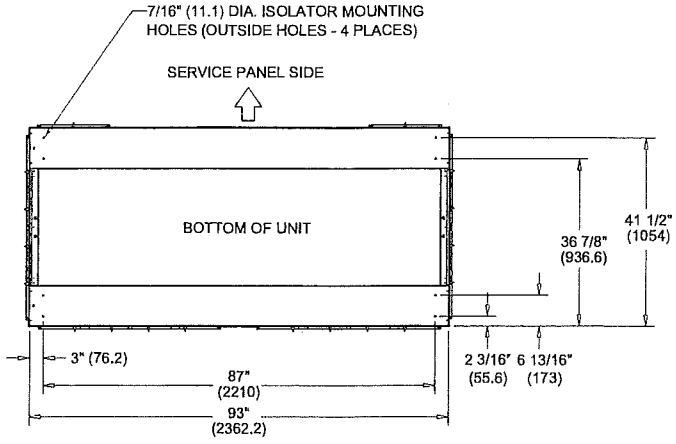

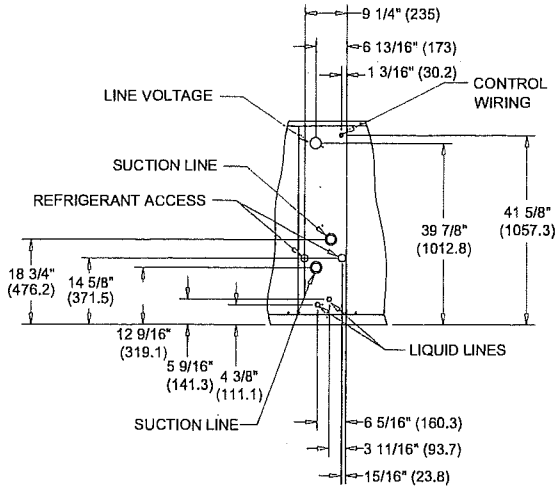

FRONT DETAIL A
DIMENSIONAL DETAIL

Figure 9. TTA156, 180, 201, 240 Condensing Unit, Manifolded Compressor

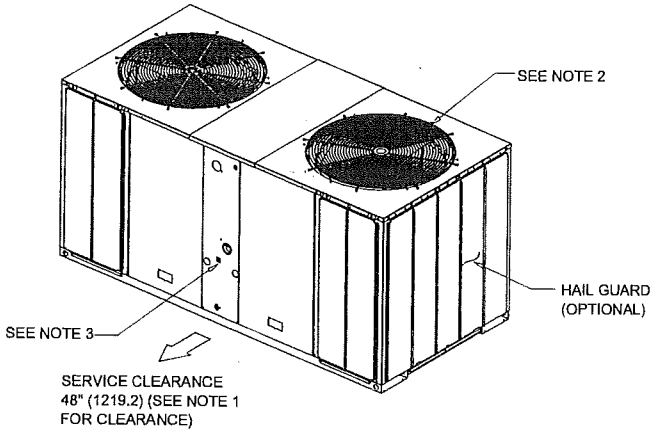

NOTES:
1. MINIMUM CLEARANCE FOR PROPER OPERATION IS 36" (914.4) FROM WALLS, SHRUBBERY, PRIVACY FENCES ETC. MINIMUM CLEARANCE BETWEEN ADJACENT UNITS IS 72" (1828.8). RECOMMENDED SERVICE CLEARANCE 48" (1219.2)
2. TOP DISCHARGE AREA SHOULD BE UNRESTRICTED FOR 100" (2540) MINIMUM. UNIT SHOULD BE PLACED SO ROOF RUN-OFF WATER DOES NOT POUR DIRECTLY ON UNIT
3. OUTDOOR AIR TEMPERATURE SENSOR OPENING (DO NOT BLOCK OPENING)

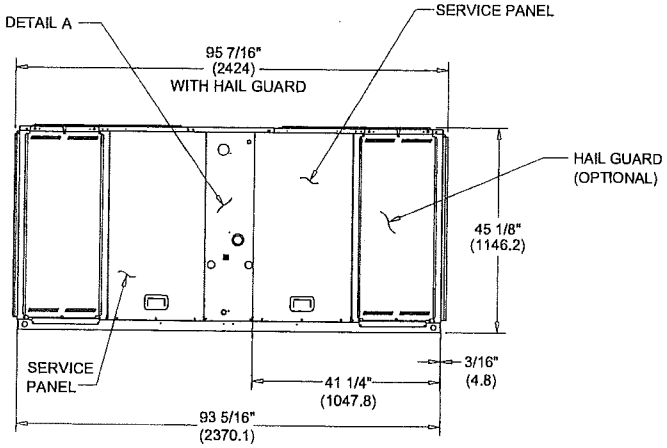

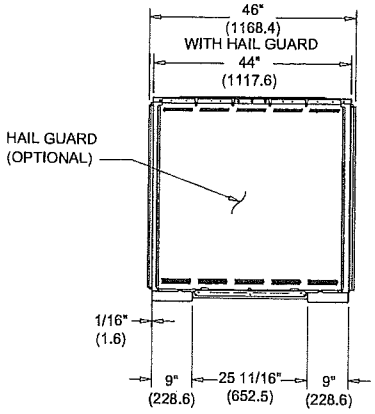

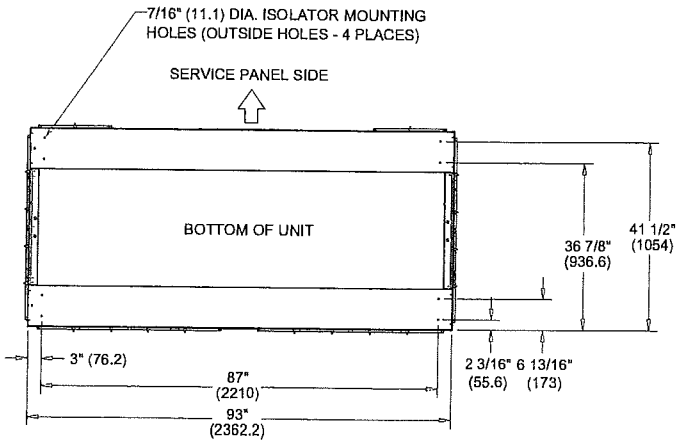

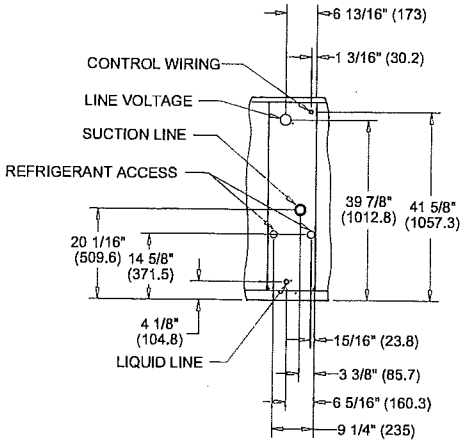

FRONT DETAIL A
DIMENSIONAL DETAIL

Electrical Data

Table 3. Electrical Characteristics — Compressor and Condenser Fan Motors — 50 Hz

Tons	Unit Model No.	Compressor Motor					Condenser Fan Motor				
					Amps					Amps	
		No.	Volts	Phase	RLA (Ea.)	LRA (Ea.)	No.	Volts	Phase	FLA (Ea.)	LRA (Ea.)
5	TTA061DD	1	380-415-50	3	10.9	74	1	380-415-50	1	1.6	3.8
6.25	TTA076DD	1	380-415-50	3	12.5	101	1	380-415-50	1	1.6	3.8
7	TTA086DD	1	380-415-50	3	15.2	142	1	380-415-50	1	1.9	5.8
8.33	TTA101DD	1	380-415-50	3	17.2	111	1	380-415-50	1	1.9	5.8
	TTA101ED	2	380-415-50	3	8.0	51.5	1	380-415-50	1	1.9	5.8
	TTA101FD	2	380-415-50	3	9.9	64	1	380-415-50	1	1.9	5.8
10.4	TTA126ED	2	380-415-50	3	10.9	75	1	380-415-50	1	1.9	5.8
13.0	TTA156ED	2	380-415-50	3	12.5	101	2	380-415-50	1	1.9	5.8
	TTA156FD	2	380-415-50	3	12.5	101	2	380-415-50	1	1.9	5.8
16.7	TTA201ED	2	380-415-50	3	19.1	142	2	380-415-50	1	1.9	5.8
	TTA201FD	2	380-415-50	3	19.1	142	2	380-415-50	1	1.9	5.8

Note: Electrical characteristics reflect nameplate values and are calculated in accordance with UL and ARI specifications.

Table 4. Unit Wiring — Condensing Units — 50 Hz

Unit Model No.	Unit Operating Voltage	Maximum Circuit Ampacity	Maximum Fuse Size or Maximum Circuit Breaker
TTA061DD	380/415	15.2	20
TTA076DD	380/415	17.3	25
TTA086DD	380/415	20.9	25
TTA101DD	380/415	23.4	30
TTA101ED	380/415	19.9	25
TTA101FD	380/415	24.2	30
TTA126ED	380/415	26.4	30
TTA156ED	380/415	32.0	40
TTA156FD	380/415	32.0	40
TTA201ED	380/415	46.9	60
TTA201FD	380/415	46.9	60

Table 5. Electrical Characteristics — Compressor and Condenser Fan Motors —60 Hz

Tons	Unit Model No.	Compressor Motor					Condenser Fan Motor				
					Amps					Amps	
					RLA	LRA				FLA	LRA
		No.	Volts	Phase	(Ea.)	(Ea.)	No.	Volts	Phase	(Ea.)	(Ea.)
6	TTA073D3	1	208-230	3	22.4	149	1	208-230	1	3.1	8.1
	TTA073D4	1	460	3	10.6	75	1	460	1	1.6	3.8
	TTA073DK	1	380	3	11.3	88	1	380	1	2.7	7
	TTA073DW	1	575	3	7.9	54	1	575	1	1.2	3
7½	TTA090D3	1	208-230	3	25	164	1	208-230	1	3.1	8.1
	TTA090D4	1	460	3	12.9	100	1	460	1	1.6	3.8
	TTA090DK	1	380	3	14.3	94.3	1	380	1	2.7	7
	TTA090DW	1	575	3	10.6	78	1	575	1	1.2	3
10	TTA120D3	1	208-230	3	30.1	225	1	208-230	1	5	14.4
	TTA120D4	1	460	3	16.7	114	1	460	1	2.5	5.8
	TTA120DK	1	380	3	19.8	140	1	380	1	3.4	7.8
	TTA120DW	1	575	3	12.4	80	1	575	1	2	5.1
	TTA120E3	2	208-230	3	16	110	1	208-230	1	5	14.4
	TTA120E4	2	460	3	7.8	52	1	460	1	2.5	5.8
	TTA120EK	2	380	3	10.4	65.6	1	380	1	3.4	7.8
	TTA120EW	2	575	3	6	38.9	1	575	1	2	5.1
	TTA120F3	2	208-230	3	17.6	123	1	208-230	1	5	14.4
	TTA120F4	2	460	3	9.6	62	1	460	1	2.5	5.8
	TTA120FW	2	575	3	6.1	40	1	575	1	2	5.1
12½	TTA150E3	2	208-230	3	22.4	149	1	208-230	1	5	14.4
	TTA150E4	2	460	3	10.6	75	1	460	1	2.5	5.8
	TTA150EK	2	380	3	11.3	88	1	380	1	3.4	7.8
	TTA150EW	2	575	3	8.6	54	1	575	1	2	5.1
15	TTA180E3	2	208-230	3	25	164	2	208-230	1	5	14.4
	TTA180E4	2	460	3	12.2	100	2	460	1	2.5	5.8
	TTA180EK	2	380	3	14.3	94.3	2	380	1	3.4	7.8
	TTA180EW	2	575	3	9.6	78	2	575	1	2	5.1
	TTA180F3	2	208-230	3	25	164	2	208-230	1	5	14.4
	TTA180F4	2	460	3	12.2	100	2	460	1	2.5	5.8
	TTA180FK	2	380	3	14.3	94.3	2	380	1	3.4	7.8
	TTA180FW	2	575	3	9.9	78	2	575	1	2	5.1
20	TTA240E3	2	208-230	3	39.1	267	2	208-230	1	5	14.4
	TTA240E4	2	460	3	18.6	142	2	460	1	2.5	5.8
	TTA240EK	2	380	3	23.1	160	2	380	1	3.4	7.8
	TTA240EW	2	575	3	15.4	103	2	575	1	2	5.1
	TTA240F3	2	208-230	3	39.1	267	2	208-230	1	5	14.4
	TTA240F4	2	460	3	19.8	142	2	460	1	2.5	5.8
	TTA240FK	2	380	3	23.1	160	2	380	1	3.4	7.8
	TTA240FW	2	575	3	15.8	103	2	575	1	2	5.1

Note: Electrical characteristics reflect nameplate values and are calculated in accordance with cULus and ARI specifications.

Table 6. Unit Wiring — Condensing Units — 60 Hz

Tons	Unit Model Number	Unit Operating Voltage Range	Minimum Circuit Ampacity	Maximum Fuse or HACR Circuit Breaker Size[a]
6	TTA073D3	187-253	31.1	40
	TTA073D4	414-506	14.9	20
	TTA073DK	342-418	16.8	20
	TTA073DW	518-632	11.1	15
7½	TTA090D3	187-253	34.4	45
	TTA090D4	414-506	17.7	25
	TTA090DK	342-418	20.6	25
	TTA090DW	518-632	14.5	20
10	TTA120D3	187-253	42.6	60
	TTA120D4	414-506	23.4	30
	TTA120DK	342-418	28.2	35
	TTA120DW	518-632	17.5	25
	TTA120E3	187-253	41.0	45
	TTA120E4	414-506	20.1	25
	TTA120EK	342-418	26.9	30
	TTA120EW	518-632	15.5	20
	TTA120F3	187-253	44.6	50
	TTA120F4	414-506	24.1	30
	TTA120FW	518-632	15.7	20
12½	TTA150E3	187-253	55.4	70
	TTA150E4	414-506	26.4	30
	TTA150EK	342-418	28.8	35
	TTA150EW	518-632	21.4	25
15	TTA180E3	187-253	66.3	80
	TTA180E4	414-506	32.5	40
	TTA180EK	342-418	39.0	45
	TTA180EW	518-632	25.6	30
	TTA180F3	187-253	66.3	80
	TTA180F4	414-506	32.5	40
	TTA180FK	342-418	39.0	45
	TTA180FW	518-632	26.3	30
20	TTA240E3	187-253	98.0	110
	TTA240E4	414-506	46.9	60
	TTA240EK	342-418	58.8	70
	TTA240EW	518-632	38.7	45
	TTA240F3	187-253	98.0	110
	TTA240F4	414-506	49.6	60
	TTA240FK	342-418	58.8	70
	TTA240FW	518-632	39.6	45

Note: Electrical characteristics reflect nameplate values and are calculated in accordance with cULus and ARI specifications. 7½ and 10 ton values are system rated; 12½, 15 and 20 ton values are condensing unit only rated.

(a) HACR type circuit breaker per NEC.

Installation

Refrigerant Piping Guidelines

Figure 10. Allowable elevation difference: Cooling only TTA *above* indoor unit

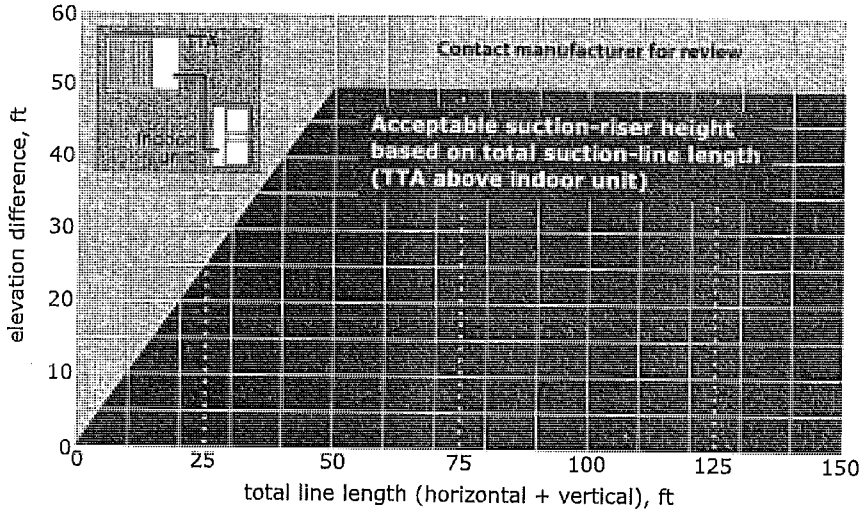

Figure 11. Allowable elevation difference: TTA *below* indoor unit

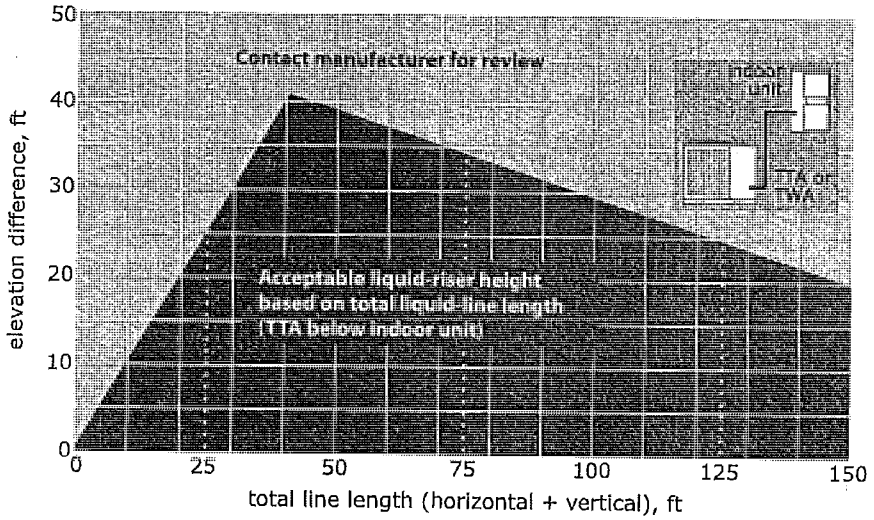

Note: *Route refrigerant piping for minimum linear length, minimum number of bends and fittings (no reducers) and minimum amount of line exposed to outdoor ambients.*

Refrigerant Piping Procedures (Outdoor Units)

⚠WARNING

R-410A Refrigerant under Higher Pressure than R-22!

The unit described in this manual uses R-410A refrigerant which operates at higher pressures than R-22 refrigerant. Use ONLY R-410A rated service equipment or components with this unit. For specific handling concerns with R-410A, please contact your local Trane representative.

Failure to use R-410A rated service equipment or components could result in equipment or components exploding under R-410A high pressures which could result in death, serious injury, or equipment damage.

Each TTA unit ships with a holding charge of dry nitrogen. The nitrogen should be removed and the entire system evacuated (at the proper time) to avoid possible contamination.

1. Remove the compressor service access panel.
2. Locate the liquid and suction line service valves. Check that the piping connection stubs on the valves (Figure 12, p. 23) line up properly with the holes in the unit cabinet

Figure 12. Outdoor Units - Refrigerant Piping (with dry nitrogen)

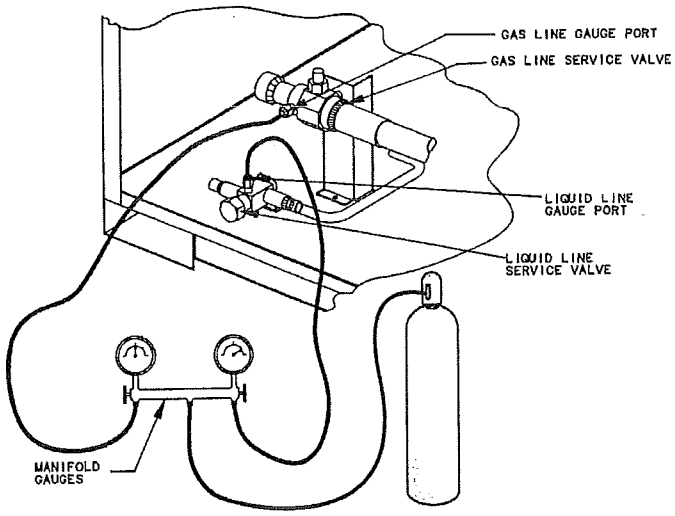

3. Remove the refrigerant connection seal caps and open the service valve slowly to release the nitrogen from the unit.

NOTICE

System Component Damage!

Do not remove the seal caps from refrigerant connections, or open the service valves until prepared to braze refrigerant lines to the connections. Excessive exposure to atmosphere (> 5 min.) may allow moisture or dirt to contaminate the system, damaging valve seals and causing ice formation in system components.

⚠WARNING

Hazard of Explosion and Deadly Gases!

Never solder, braze or weld on refrigerant lines or any unit components that are above atmospheric pressure or where refrigerant may be present. Always remove refrigerant by following the guidelines established by the EPA Federal Clean Air Act or other state or local codes as appropriate. After refrigerant removal, use dry nitrogen to bring system back to atmospheric pressure before opening system for repairs. Mixtures of refrigerants and air under pressure may become combustible in the presence of an ignition source leading to an explosion. Excessive heat from soldering, brazing or welding with refrigerant vapors present can form highly toxic gases and extremely corrosive acids. Failure to follow all proper safe refrigerant handling practices could result in death or serious injury.

4. Cut, fit and braze tubing, starting at the outdoor unit and work toward the indoor unit. See recommended tube sizes, Table 8, p. 27.

Note: *Use long radius ells for all 90° bends.*

All brazing should be done using a 2 to 3 psig dry nitrogen purge flowing through the pipe being brazed, Figure 12.

NOTICE
System Component Damage!

Install a regulating valve between the nitrogen source and the gauge manifold (Figure 12). **Unregulated pressure can damage system components.**

NOTICE
System Component Damage!

Wet-wrap all valves and protect painted surfaces from excessive heat. Heat can damage system components and the unit finish.

5. Shut off nitrogen supply. Shut off the manifold valve for the line that is connected to the suction line service valve. Disconnect the line from the gauge port on the valve.

Refrigerant Piping Procedure (Indoor Unit)

Once liquid and suction lines are complete to the refrigerant connections on the indoor unit, remove the gauge port core(s) on the indoor unit connection stubs to release the dry nitrogen charge.

NOTICE
Unit Damage!

Do not apply heat to remove seal caps until the gauge port cores have been removed. If seal caps are intact, application of heat may generate excessive pressure in the unit and result in damage to the coil or expansion valve.

1. Remove both seal caps from the indoor unit connection stubs.

NOTICE
Equipment Damage!

Do not remove the seal caps from refrigerant connections, or open the service valves until prepared to braze refrigerant lines to the connections. Due to the high hygroscopic properties of the R410A oil, excessive exposure to atmosphere will allow moisture to contaminate the system, damaging the compressor.

2. Turn nitrogen supply on. Nitrogen enters thorough liquid line gauge port.
3. Braze the liquid line connections.
4. Open the gauge port on the suction line and then braze the suction line to the connection stub. Nitrogen will bleed out the open gauge port on the suction line.
5. Shut off nitrogen supply.

Leak Check

⚠WARNING
Hazard of Explosion!

Use only dry nitrogen with a pressure regulator for pressurizing unit. Do not use acetylene, oxygen or compressed air or mixtures containing them for pressure testing. Do not use mixtures of a hydrogen containing refrigerant and air above atmospheric pressure for pressure testing as they may become flammable and could result in an explosion. Refrigerant, when used as a trace gas should only be mixed with dry nitrogen for pressurizing units. Failure to follow these recommendations could result in death or serious injury or equipment or property-only damage.

⚠WARNING
Hazard of Explosion!

Never use an open flame to detect gas leaks. Explosive conditions may occur. Use a leak test solution or other approved methods for leak testing. Failure to follow recommended safe leak test procedures could result in death or serious injury or equipment or property-only-damage.

After the brazing operation of refrigerant lines to both the outdoor and indoor unit is completed, the field brazed connections must be checked for leaks. Pressurize the system through the service valve with dry nitrogen to 200 psi. Use soap bubbles or other leak-checking methods to ensure that all field joints are leak free. If not, release pressure, repair and repeat leak test.

System Evacuation

1. After completion of leak check, evacuate the system.
2. Attach appropriate hoses from manifold gauge to gas and liquid line pressure taps.

Note: *Unnecessary switching of hoses can be avoided and complete evacuation of all lines leading to sealed system can be accomplished with manifold center hose and connecting branch hose to a cylinder of R-410A and vacuum pump.*

3. Attach center hose of manifold gauges to vacuum pump.

NOTICE
Operating Under Vacuum

Do not operate or apply power to the compressor while under a vacuum. Failure to follow these instructions will result in compressor failure.

4. Evacuate the system to hold a 500 micron vacuum.
5. Close off valve to vacuum pump and observe the micron gauge. If gauge pressure rises above 500 microns in one (1) minute, then evacuation is incomplete or the system has a leak.
6. If vacuum gauge does not rise above 500 microns in one (1) minute, the evacuation should be complete.

NOTICE
Equipment Damage

Charge with access port on the liquid line service valve only.

7. With vacuum pump and micron gauge blanked off, open valve on R-410A cylinder and allow refrigerant pressure to build up to about 80 psig.
8. Close valve on the R-410A supply cylinder. Close valves on manifold gauge set and remove refrigerant charging hoses from liquid and gas gauge ports.
9. Leak test the entire system. Using proper procedures and caution, as described in the previous section, repair any leaks found and repeat the leak test.

Insulating and Isolating Refrigerant Lines

Insulate the entire suction line with refrigerant piping insulation. Also insulate any portion of the liquid line exposed to temperature extremes. Insulate and isolate liquid and suction lines from each other. Isolate refrigerant lines from the structure and any duct work.

Note: *To prevent possible noise or vibration problems, be certain to isolate refrigerant lines from the building.*

Important: *All suction and hot gas bypass piping (if installed) should be insulated from the termination in the air handler to the condensing unit cabinet entry. Failure to do so can cause condensate drip off and performance degradation.*

Important: *Prior to starting a unit is it is advisable to have the approved oils available in the event that oil is required to be added to the system.*

NOTICE
Equipment Damage!

This is POE oil which readily absorbs moisture, always use new oil and never leave the containers open to atmosphere while not in use.

Table 7. TTA Approved Oils

Unit Model Number	Approved Oils
TTA061, TTA073, TTA076, TTA090, TTA101, TTA120, TTA126, TTA150, TTA156, TTA180	Trane Oil Part Number OIL00094 (1 quart container)
TTA086, TTA201, TTA240	Trane Oil Part Number OIL00079 (1 quart container) or OIL00080 (1 gallon container).

For units equipped with compressors containing site glasses, the oil level must be visible through the sight glass when the compressor is running under stabilized conditions and a few minutes after the compressor has stopped.

Refrigerant Charging Procedure

If charging by weight, refer to Table 8, p. 27 for starting change. If refrigerant adjustments are needed because of length of line, refer to charging curves, "Charging Charts," p. 35.

Charge by weight through the gauge port on the liquid line. Once the charge enters the system, backseat (open) the liquid line service valve and disconnect the charging line and replace the cap on the gauge port.

Notes:

- *R-410A should only be charged in the liquid state.*
- *When possible, always charge the refrigerant into the liquid line of the unit.*
- *If the entire charge can't be charged into the liquid line, the balance of the unit charge can be metered through a charging manifold set as liquid preferably through a schrader valve into the suction line to the compressor — only while the compressor is running.*

NOTICE
Equipment Damage!

Never charge liquid refrigerant into the suction line of the unit with the compressor off.

Figure 13. Outdoor Units - Refrigerant Piping

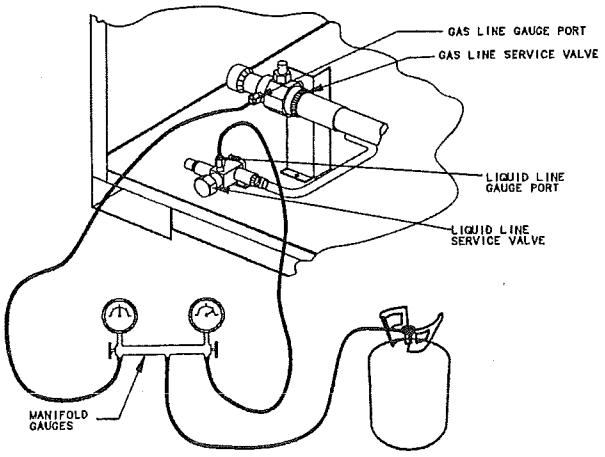

Table 8. Estimated charge levels at ARI rated line lengths (25 feet) - 50 & 60 Hz

	Refrigerant Charge		Per Circuit	
Matched Set	Circuit 1	Circuit 2	Liquid Line Diameter	Vapor Line Diameter
TTA061D w/TWE073D	15.7	NA	0.5	1.125
TTA073D w/TWE090D	15.7	NA	0.5	1.125
TTA076D w/TWE073D	17.6	NA	0.625	1.375
TTA090D w/TWE090D	17.6	NA	0.625	1.375
TTA101D w/TWE101D	22.5	NA	0.5	1.375
TTA120D w/TWE120D	22.5	NA	0.5	1.375
TTA101E w/TWE101E	12.2	12.6	0.5	1.125
TTA120E w/TWE120E	12.2	12.6	0.5	1.125
TTA101F w/TWE101F	21.2	NA	0.5	1.375
TTA120F w/TWE120D	21.2	NA	0.5	1.375
TTA126E w/TWE126E	15.2	15.5	0.5	1.125
TTA150E w/TWE150E	15.2	15.5	0.5	1.125
TTA156E w/TWE156E	19.5	19.5	0.5	1.375
TTA180E w/TWE180E	19.5	19.5	0.5	1.375
TTA156F w/TWE156F	37.6	NA	0.625	1.625
TTA180F w/TWE180E	37.6	NA	0.625	1.625
TTA201E w/TWE201E	21.9	21.9	0.5	1.375
TTA240E w/TWE240E	21.9	21.9	0.5	1.375
TTA201F w/TWE201F	41.3	NA	0.625	1.625
TTA240F w/TWE240E	41.3	NA	0.625	1.625

Table 9. TTA Superheat with Matched TWE Air Handler - 50 & 60 Hz

Condenser	Air Handler	Cooling Superheat	
		Circuit 1	Circuit 2
TTA061D	TWE076D	16.8	—
TTA073D	TWE090D	16.8	—
TTA076D	TWE076D	12.8	—
TTA090D	TWE090D	12.8	—
TTA101D	TWE101D	15.5	—
TTA120D	TWE120D	15.5	—
TTA101E	TWE101D	12.6	12.6
TTA120E	TWE120E	12.6	12.6
TTA101F	TWE101F	11.4	—
TTA120F	TWE120D	11.4	—
TTA126E	TWE126E	13.6	13.6
TTA150E	TWE150E	13.6	13.6
TTA156E	TWE156E	18.4	18.4
TTA180E	TWE180E	19.1	—
TTA156F	TWE156E	19.1	—
TTA180F	TWE180E	19.1	—
TTA201E	TWE201E	15.2	15.2
TTA240E	TWE240E	15.2	15.2
TTA201F	TWE201E	12.9	—
TTA240F	TWE240E	12.9	—

Notes:
1. A preset, adjustable TXV is provided for each circuit in the TWE and TWA models. If the application causes the superheat to deviate from the values shown above by more than 1 degree - after the system has achieved steady state - the TXV should be adjusted to provide the values shown as measured at the compressor.
2. The values given above have been tested and are approved for the matched sets shown. If an alternate combination is used, an expansion device should be used that provides 16-20°F degrees of superheat measured at the compressor.

Liquid Charging

This procedure is accomplished with the unit operating. Electrical connections must be complete. Do not proceed until the system is ready to operate.

Note: *The compressor access panel must be installed when the unit is running and being charged. Manifold hoses must be routed through refrigerant gauge access hole(s). See dimensional diagrams for specific locations (Figure 3, p. 12 - Figure 9, p. 18).*

⚠WARNING
Live Electrical Components!

During installation, testing, servicing and troubleshooting of this product, it may be necessary to work with live electrical components. Have a qualified licensed electrician or other individual who has been properly trained in handling live electrical components perform these tasks. Failure to follow all electrical safety precautions when exposed to live electrical components could result in death or serious injury.

1. Turn on power to the unit. Allow the system to run for 5 to 10 minutes to stabilize operating conditions.
2. Measure airflow across the indoor coil. Compare the measurements with the fan performance data in the Data/Submittal or Service Facts. Once proper airflow is established, compare discharge pressure and liquid temperature to the "Charging Charts," p. 35. Add or remove

refrigerant (liquid only) as required to obtain correct discharge pressure and liquid temperature. Check suction line superheat and condenser sub-cooling to ensure the unit is operating properly.

3. Disconnect all power to the unit.

Important: *If the unit is charged and left without power until a later date, the crankcase heater should be energized for a minimum of 8 hours prior to powering the compressor(s).*

⚠ WARNING
Hazardous Voltage w/Capacitors!

Disconnect all electric power, including remote disconnects and discharge all motor start/run capacitors before servicing. Follow proper lockout/tagout procedures to ensure the power cannot be inadvertently energized. For variable frequency drives or other energy storing components provided by Trane or others, refer to the appropriate manufacturer's literature for allowable waiting periods for discharge of capacitors. Verify with an appropriate voltmeter that all capacitors have discharged. Failure to disconnect power and discharge capacitors before servicing could result in death or serious injury.

4. Remove the charging system from the unit.
5. Replace all panels.

Electrical Wiring

⚠WARNING
Electrocution and Fire Hazards with Improperly Installed and Grounded Field Wiring!

Improperly installed and grounded field wiring poses FIRE & ELECTROCUTION hazards. To avoid these hazards, you MUST follow requirements for field wiring installation and grounding as described in NEC and your local/state electrical codes. All field wiring MUST be performed by qualified personnel. Failure to follow these requirements could result in death or serious injury.

TTA field wiring consists of providing power supply to the unit, installing the system indoor thermostat and providing low voltage system interconnecting wiring. Access to electrical connection locations is shown in *Figure 3, p. 12 - Figure 9, p. 18.*

Unit Power Supply

The installer must provide line voltage circuit(s) to the unit main power terminals as shown by the unit wiring diagrams in Service Facts or field wiring. Power supply must include a disconnect switch in a location convenient to the unit. Ground the unit according to local codes and provide flexible conduit if codes require and/or if vibration transmission may cause noise problems.

Important: *All wiring must comply with applicable local and national (NEC) codes. Type and location of disconnect switches must comply with all applicable codes.*

⚠ WARNING
Ground Wire!

All field-installed wiring must be completed by qualified personnel. All field-installed wiring must comply with NEC and applicable local codes. Failure to follow this instruction could result in death or serious injuries.

NOTICE

Equipment Damage!

Use copper conductors only! Unit terminals are not designed to accept other types of conductors. Failure to do so could result in possible equipment damage.

Field Wiring- Electromechanical Control

Determine proper wire sizes and unit protective fusing requirements by referring to the unit nameplate and/or the unit Service Facts. Field wiring diagrams for accessories are shipped with the accessory.

⚠WARNING

Hazardous Voltage w/Capacitors!

Disconnect all electric power, including remote disconnects and discharge all motor start/run capacitors before servicing. Follow proper lockout/tagout procedures to ensure the power cannot be inadvertently energized. For variable frequency drives or other energy storing components provided by Trane or others, refer to the appropriate manufacturer's literature for allowable waiting periods for discharge of capacitors. Verify with an appropriate voltmeter that all capacitors have discharged. Failure to disconnect power and discharge capacitors before servicing could result in death or serious injury.

Low Voltage Wiring

Mount the indoor thermostat, zone sensor, or Night Setback Panel (NSB) in accordance with the corresponding thermostat installation instructions. Install color-coded, weather-proof, multi-wire cable according to the interconnecting wiring diagrams in the Air Handler IOM.

For Electromechanical Controls

Wiring shown with dashed lines is to be furnished and installed by the customer. All customer-supplied wiring must be copper only and must conform to NEC and local electrical codes. Codes may require line of sight between disconnect switch and unit.

Note: *When electric heater accessory is used, single point power entry or dual point power entry is field optional. Single point power entry option is through electric heater only.*

Figure 14. Thermostat and Control Connections — Electromechanical Controls

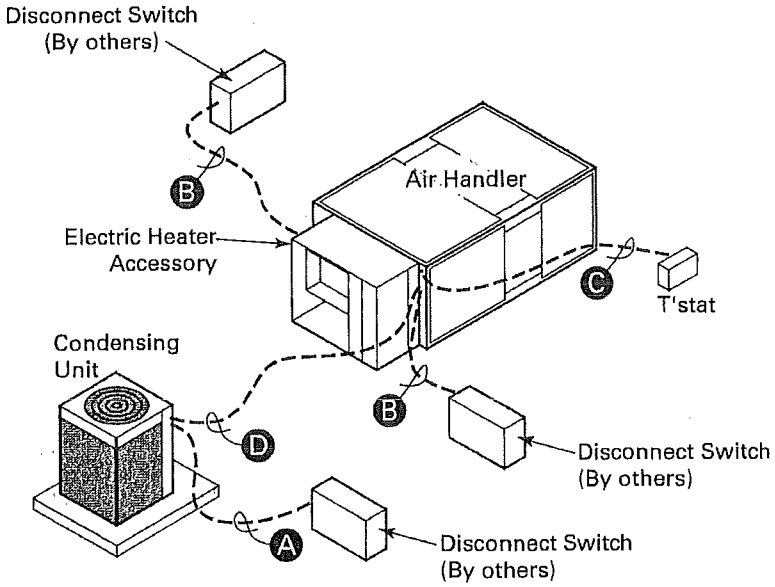

60 Hz - TTA/TWE

TTA073D/TWE090D	TTA120F/TWE120E[a]	TTA240F/TWE240E[a]
TTA090D/TWE090D	TTA150E/TWE150E	(2) TTA073D/TWE150E
TTA090D/TWE120D	TTA180E/TWE180E	(2) TTA090D/TWE180E
TTA120D/TWE120D	TTA180E/TWE240E	(2) TTA120D/TWE240E
TTA120E/TWE120E	TTA180F/TWE180E[a]	(2) TTA120F/TWE240E
TTA120F/TWE120D	TTA240E/TWE240E	

50 Hz - TTA/TWE

TTA061DD/TWE076DD	TTA101FD/TWE101DD	TTA201ED/TWE201ED
TTA076DD/TWE076DD	TTA126ED/TWE126ED	TTA201FD/TWE201ED[a]
TTA086DD/TWE101DD	TTA156ED/TWE156ED	(2) TTA061DD/TWE126ED
TTA101DD/TWE101DD	TTA156ED/TWE201ED	(2) TTA076DD/TWE156ED
TTA101ED/TWE101ED	TTA156FD/TWE156ED[a]	(2) TTA101DD/TWE201ED

(a) Need to manifold the dual circuit indoor unit when connecting to a Manifolded outdoor unit.

Field Wiring:

A. 3 power wires. Line voltage for 3 phase (2 wires for single phase)

B. 3 power wires. Line voltage for 3 phase (2 wires for single phase)

C. **Cooling only thermostat**: 3 to 7 wires depending on stages of electric heat

D. 3 to 7 wires depending on type of outdoor unit(s)

Field Wiring- ReliaTel™ Control

Wiring shown with dashed lines is to be furnished and installed by the customer. All customer-supplied wiring must be copper only and must conform to NEC and local electrical codes. Codes may require line of sight between disconnect switch and unit.

⚠WARNING
Hazardous Voltage w/Capacitors!

Disconnect all electric power, including remote disconnects and discharge all motor start/run capacitors before servicing. Follow proper lockout/tagout procedures to ensure the power cannot be inadvertently energized. For variable frequency drives or other energy storing components provided by Trane or others, refer to the appropriate manufacturer's literature for allowable waiting periods for discharge of capacitors. Verify with an appropriate voltmeter that all capacitors have discharged. Failure to disconnect power and discharge capacitors before servicing could result in death or serious injury.

Notes:

1. When electric heater accessory is used, single point power entry or dual point power entry is field optional. Single point power entry option is through electric heater only.
2. ***Choose only one of the following; Thermostat, Zone Sensor, or NSB Panel.

Figure 15. Thermostat and Control Connections — ReliaTel™ Controls

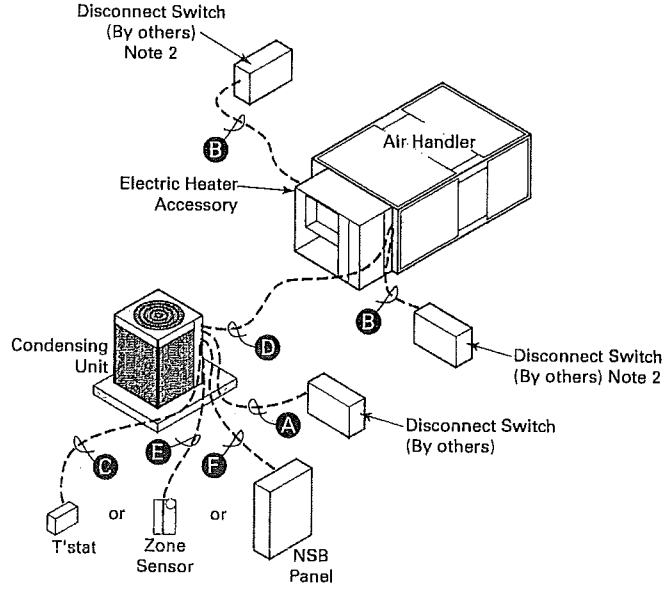

60 Hz - TTA/TWE

TTA073D/TWE090D	TTA120F/TWE120E[a]	TTA240F/TWE240E[a]
TTA090D/TWE090D	TTA150E/TWE150E	(2) TTA073D/TWE150E
TTA090D/TWE120D	TTA180E/TWE180E	(2) TTA090D/TWE180E
TTA120D/TWE120D	TTA180E/TWE240E	(2) TTA120D/TWE240E
TTA120E/TWE120E	TTA180F/TWE180E[a]	(2) TTA120F/TWE240E
TTA120F/TWE120D	TTA240E/TWE240E	

50 Hz - TTA/TWE

TTA061DD/TWE076DD	TTA101FD/TWE101DD	TTA201ED/TWE201ED
TTA076DD/TWE076DD	TTA126ED/TWE126ED	TTA201FD/TWE201ED[a]
TTA086DD/TWE101DD	TTA156ED/TWE156ED	(2) TTA061DD/TWE126ED
TTA101DD/TWE101DD	TTA156ED/TWE201ED	(2) TTA076DD/TWE156ED
TTA101ED/TWE101ED	TTA156FD/TWE156ED[a]	(2) TTA101DD/TWE201ED

(a) Need to manifold the dual circuit indoor unit when connecting to a Manifolded outdoor unit.

Field Wiring:

A. 3 power wires, line voltage for 3 phase, (2 power wires for single phase)

B. 3 power wires, line voltage for 3 phase, (2 power wires for single phase)

C. **Cooling only thermostat**: 3 to 7 wires depending on stages of electric heat
Zone Sensor: 4 to 10 wires depending on zone sensor model [1]

D. 3 to 7 wires depending on type of outdoor unit(s).

Field Wiring

Figure 16. Night Setback Panel Field Wiring

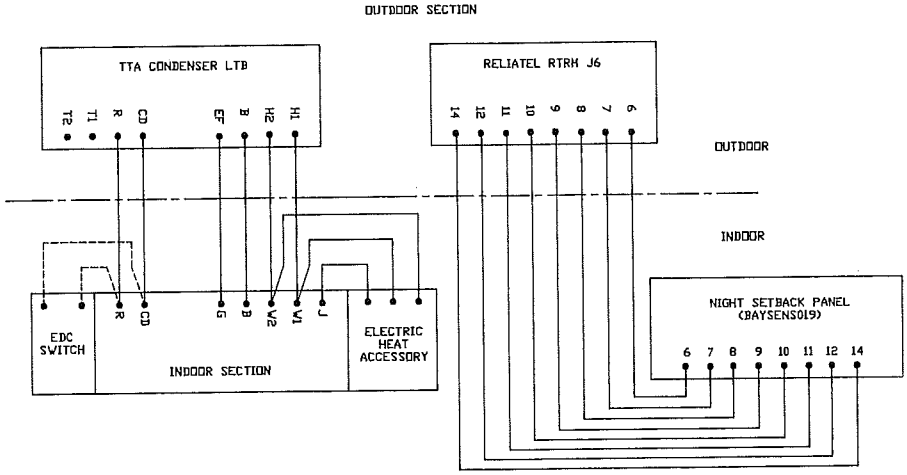

Figure 17. Zone Sensor Field Wiring

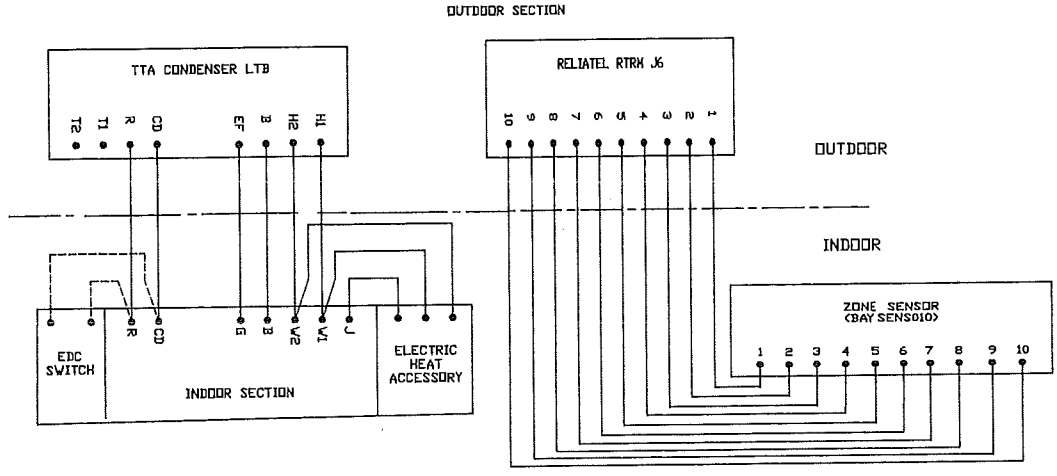

Figure 18. Zone Sensor Field Wiring

[1] See Zone Sensor wiring instructions for wiring information (ReliaTel Controls only).

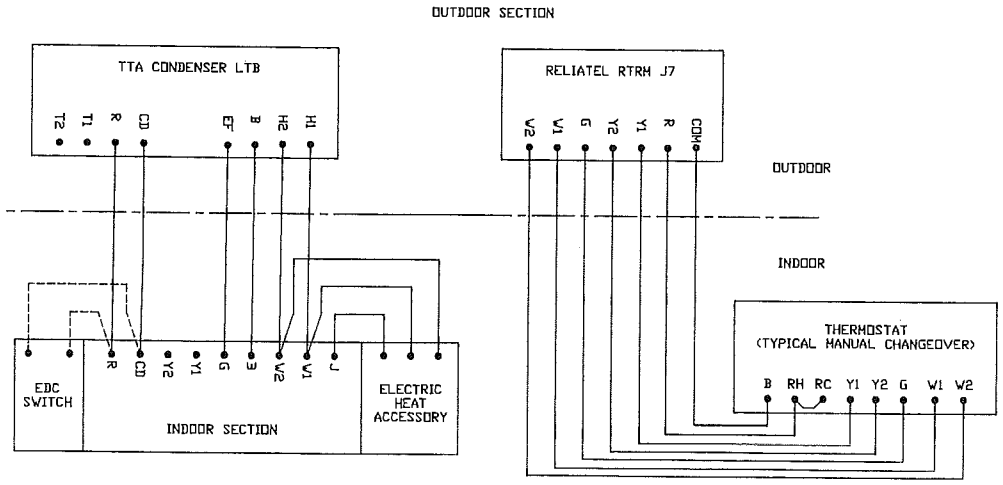

Refrigerant Circuit

Figure 19. Typical Split System Cooling Refrigerant Circuit

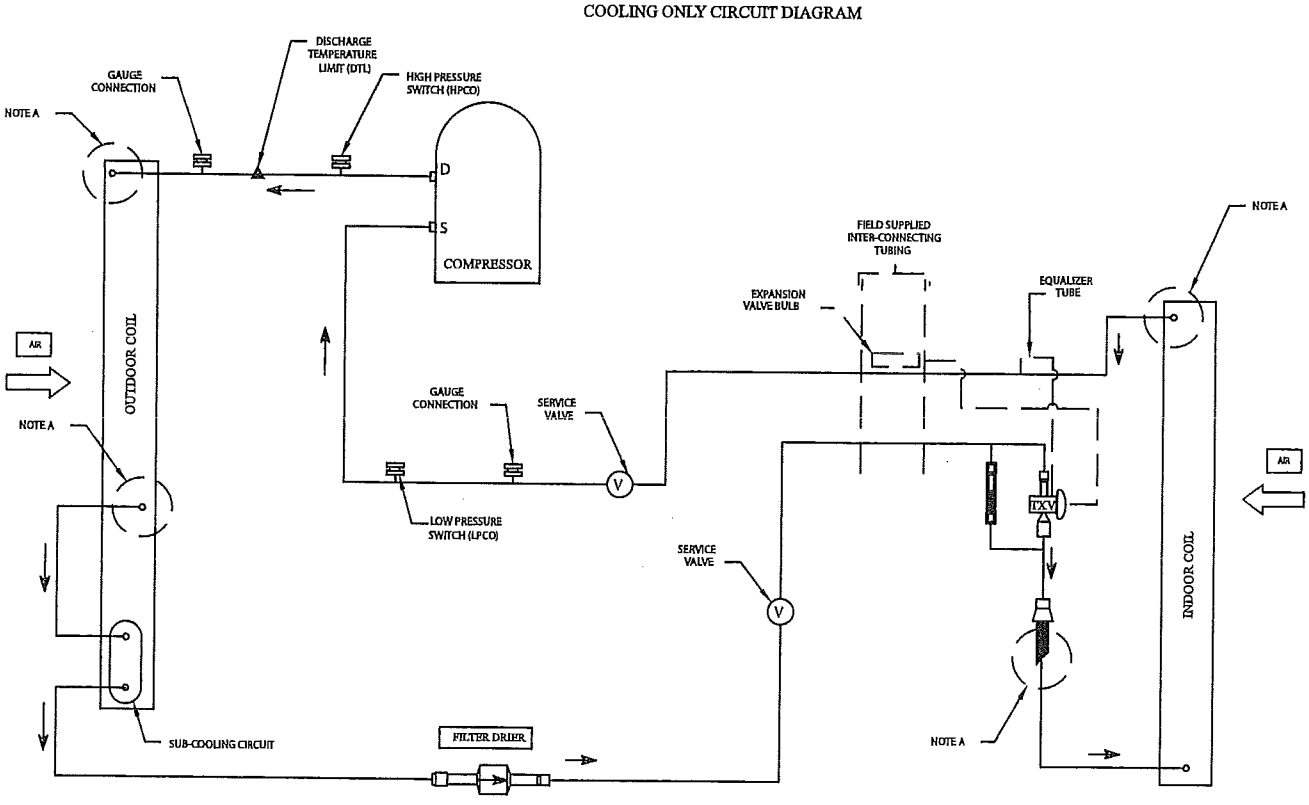

INDICATES DIRECTION OF REFRIGERANT FLOW

NOTE A: ONLY ONE OUTDOOR AND INDOOR COIL REFRIGERANT ENTRY AND EXIT CIRCUIT IS SHOWN. ALL MODELS HAVE MULTIPLE ENTRY AND EXIT CIRCUITS.

NOTE B: DUAL CIRCUIT MODELS HAVE 2 REFRIGERATION CIRCUITS.

Charging Charts

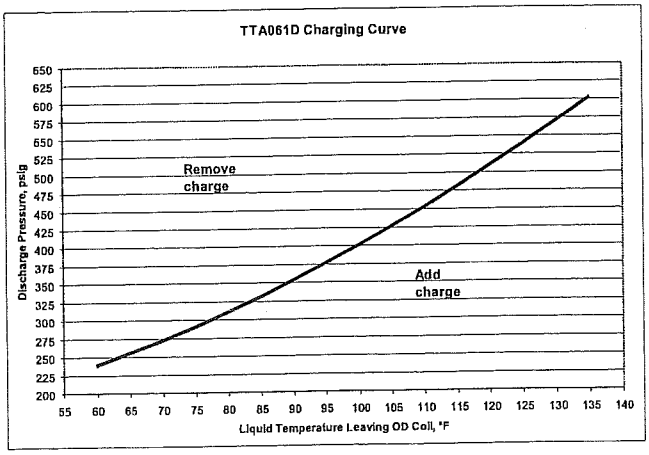

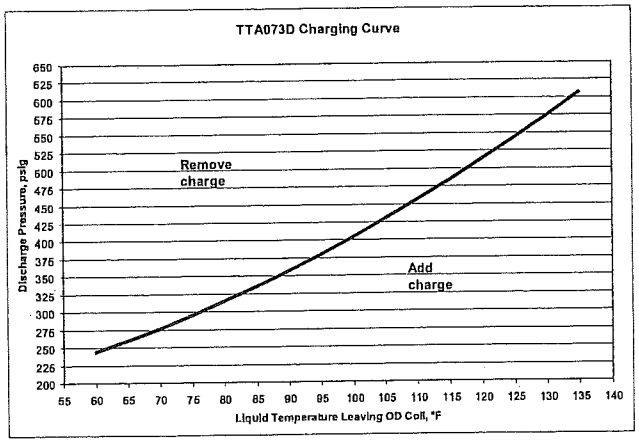

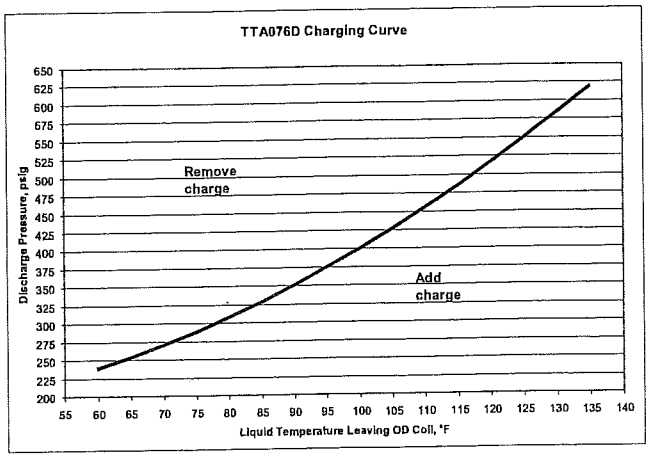

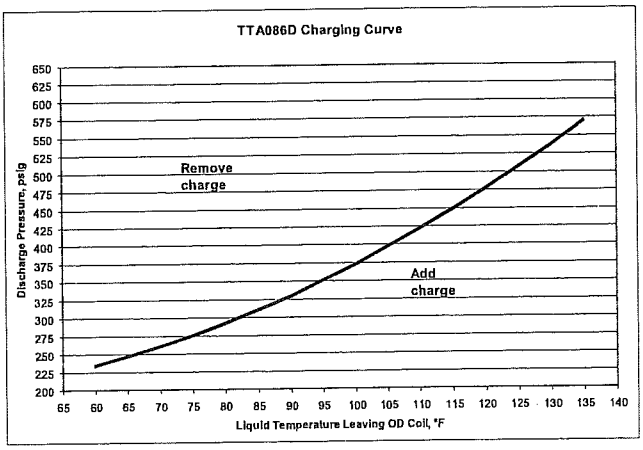

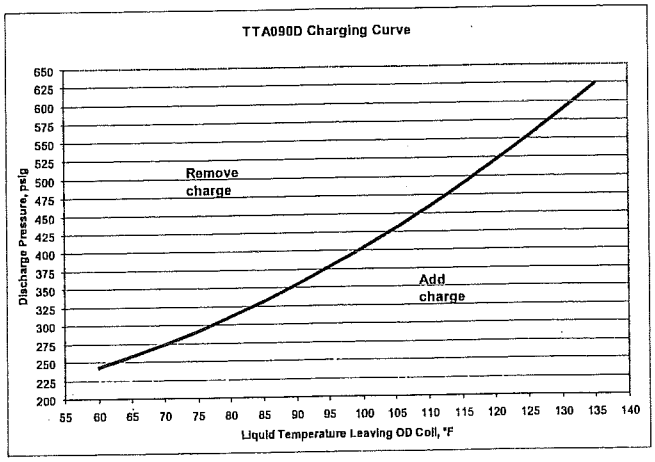

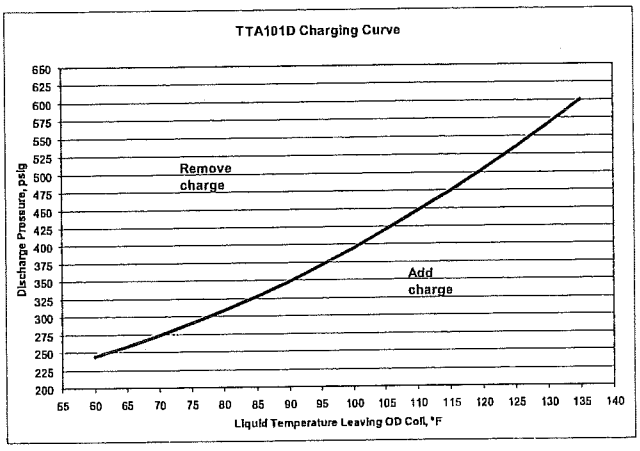

Charging Charts

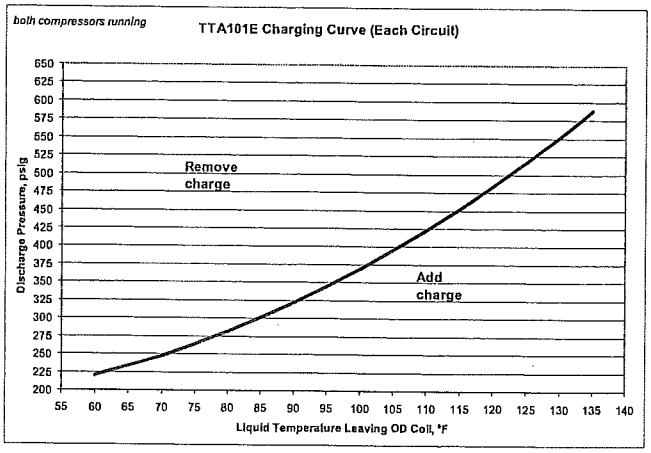

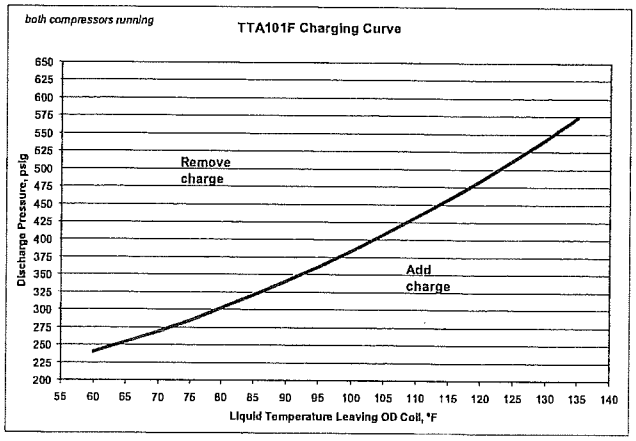

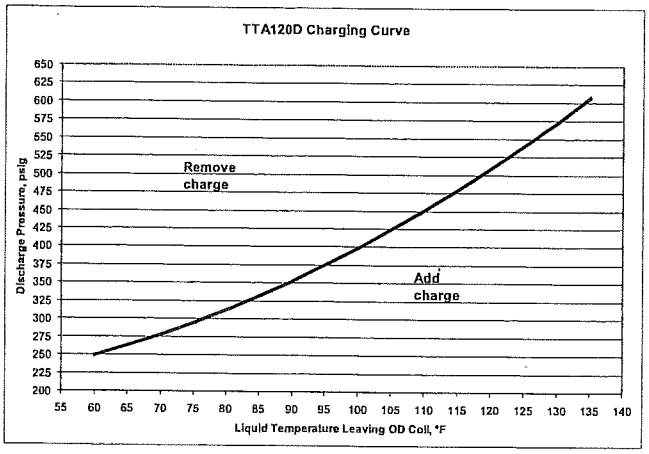

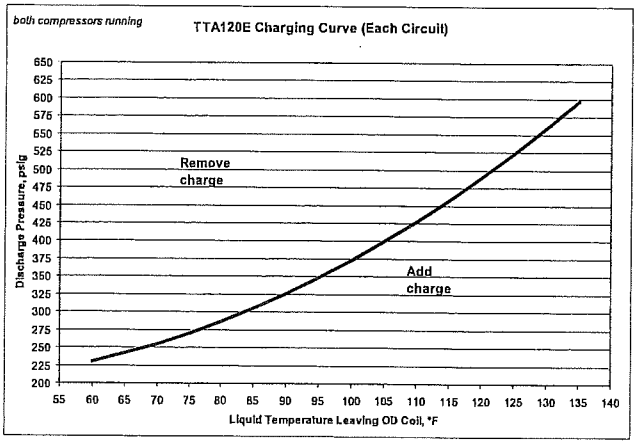

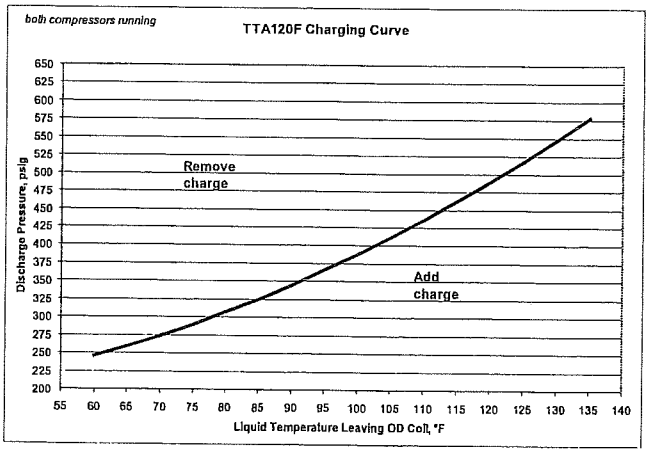

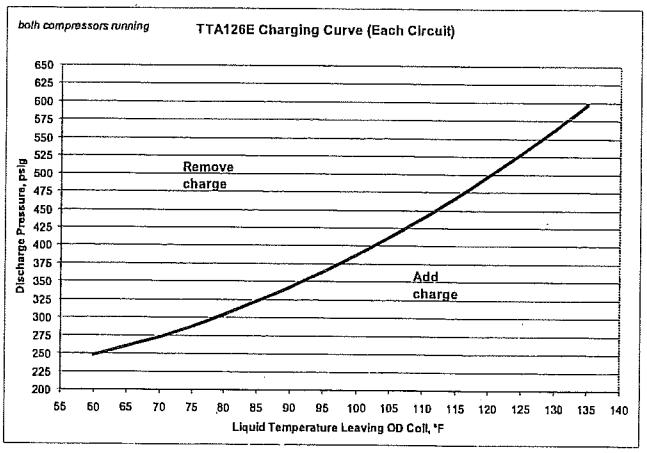

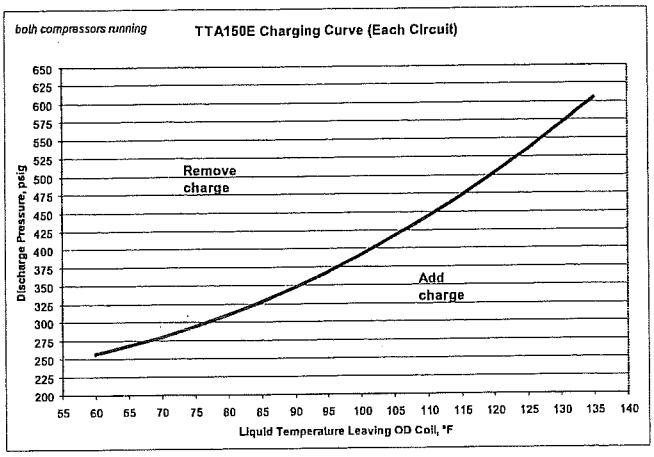
both compressors running
TTA150E Charging Curve (Each Circuit)
Discharge Pressure, psig
650 625 600 575 550 525 500 475 450 425 400 375 350 326 300 275 250 225 200
Remove charge
Add charge
55 60 65 70 75 80 85 90 95 100 105 110 115 120 125 130 135 140
Liquid Temperature Leaving OD Coil, °F

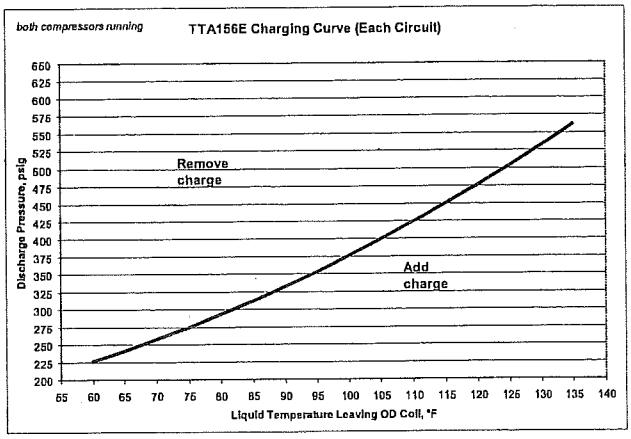
both compressors running
TTA156E Charging Curve (Each Circuit)
Discharge Pressure, psig
650 625 600 575 550 525 500 475 450 425 400 375 350 325 300 275 250 225 200
Remove charge
Add charge
55 60 65 70 75 80 85 90 95 100 105 110 115 120 125 130 135 140
Liquid Temperature Leaving OD Coil, °F

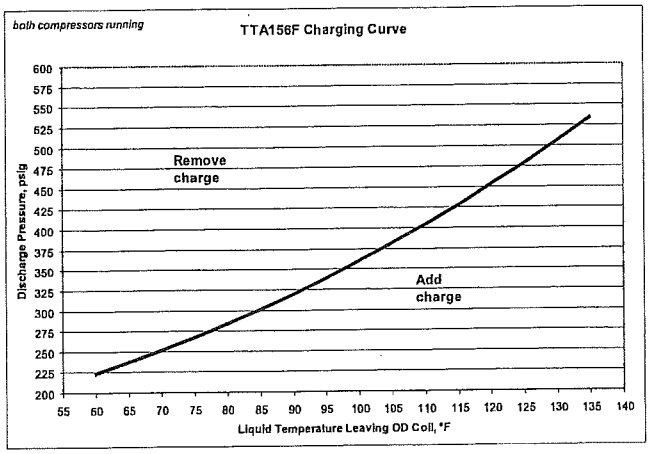
both compressors running
TTA156F Charging Curve
Discharge Pressure, psig
600 575 550 525 500 475 450 425 400 375 350 325 300 275 250 225 200
Remove charge
Add charge
55 60 65 70 75 80 85 90 95 100 105 110 115 120 125 130 135 140
Liquid Temperature Leaving OD Coil, °F

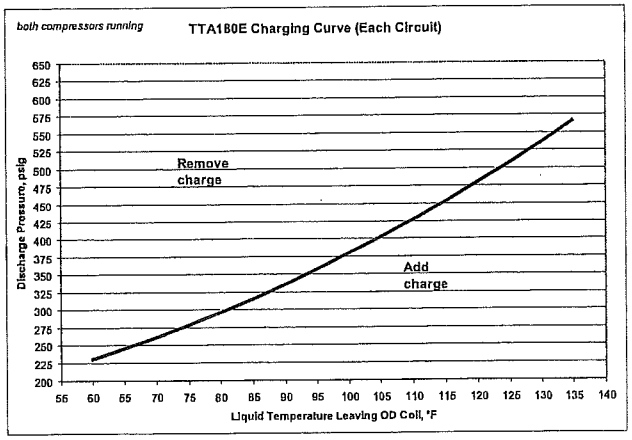
both compressors running
TTA180E Charging Curve (Each Circuit)
Discharge Pressure, psig
650 625 600 575 550 525 500 475 450 425 400 375 350 325 300 275 250 225 200
Remove charge
Add charge
55 60 65 70 75 80 85 90 95 100 105 110 115 120 125 130 135 140
Liquid Temperature Leaving OD Coil, °F

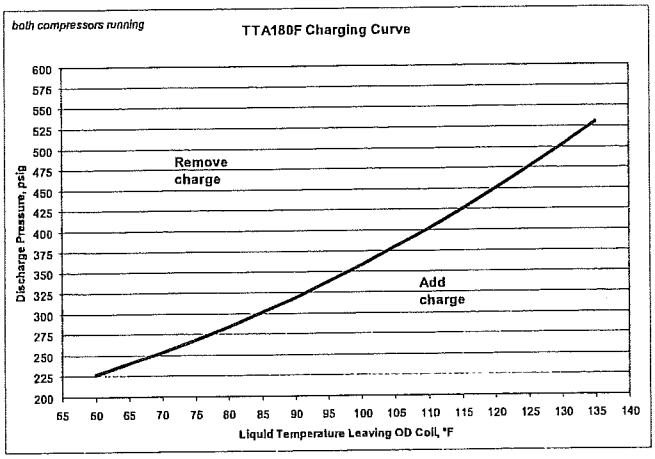
both compressors running
TTA180F Charging Curve
Discharge Pressure, psig
600 575 550 525 500 475 450 425 400 375 350 325 300 275 250 225 200
Remove charge
Add charge
55 60 65 70 75 80 85 90 95 100 105 110 115 120 125 130 135 140
Liquid Temperature Leaving OD Coil, °F

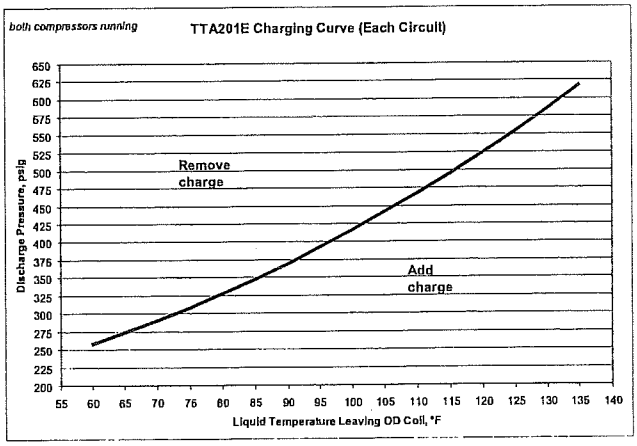
both compressors running
TTA201E Charging Curve (Each Circuit)
Discharge Pressure, psig
650 625 600 575 550 525 500 475 450 425 400 375 350 325 300 275 250 225 200
Remove charge
Add charge
55 60 65 70 75 80 85 90 95 100 105 110 115 120 125 130 135 140
Liquid Temperature Leaving OD Coil, °F

Charging Charts

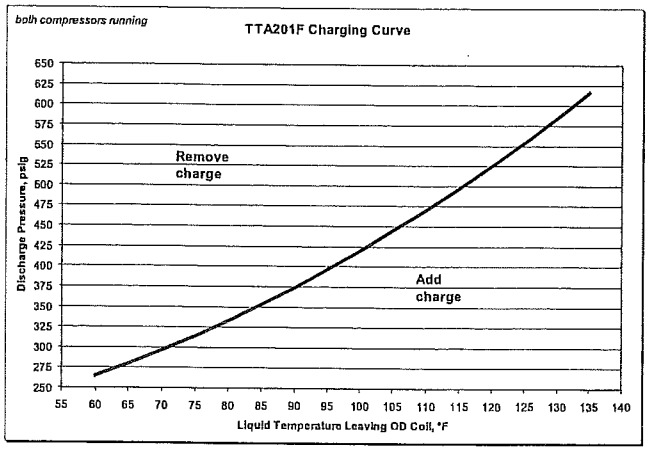

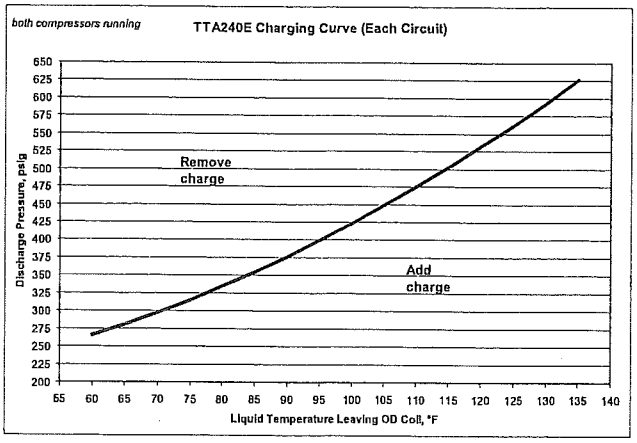

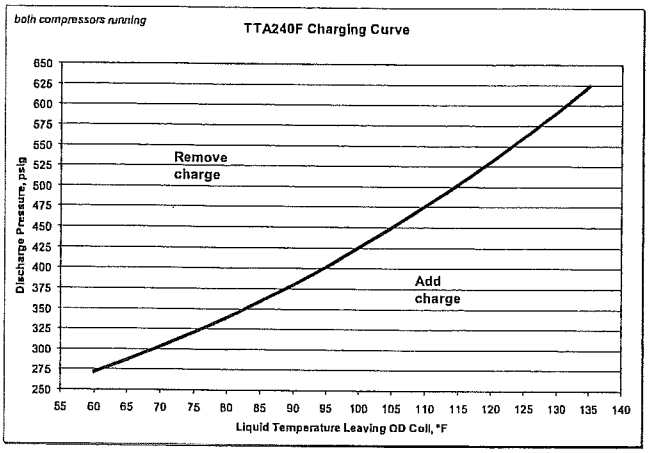

Pre-Start

Control Circuit Features

Note: *Not all of these features may be required for your unit, check electrical schematic.*

Discharge Temperature Limit (DTL)

The control's sensor is located on the discharge line. This device will shut off the compressor and the outdoor fan(s) if the discharge temperature exceeds the DTL setting. Once the discharge temperature has returned to normal, the compressor will cycle back on.

Low Outdoor Ambient Cooling

The Evaporator Defrost Control is standard equipment on Air Handlers and will permit low ambient cooling down to 50°F. For cooling operation down to 0°F, use an Accessory Head Pressure Control on the outdoor unit.

Evaporator Defrost Control (EDC)

This control is located in the Air Handler of Split Units. The control's sensing tube is embedded vertically in the evaporator coil, near the center. This device will stop the compressor if the indoor coil temperature drops below its setting. The indoor air will still circulate across the coil bringing the temperature of the coil back up to the cut-in temperature of the evaporator defrost control.

Low Pressure Cut-Out (LPCO)

This control's sensor is located in the suction (gas) line, near the compressor. This control will stop the compressor and the outdoor fans if suction pressure drops below the Low Pressure Cut-Out setting. Once the suction pressure has returned to normal, the compressor and outdoor fans will cycle back on.

High Pressure Cut-Out (HPCO)

This control's sensor is located in the discharge line. This device will shut off the compressor and the outdoor fan(s) if the discharge pressure exceeds the High Pressure Cut-Out's setting. Once the discharge pressure has returned to normal, the compressor will cycle back on.

⚠WARNING

Prevent Injury!

Due to agency safety requirements, no schrader core is be installed beneath the HPCO. Removal of the HPCO without evacuating the system charge could cause injury and release of refrigerant.

Internal Overload Protector (IOL)

This device is embedded in the compressor. It will shut off the compressor if the discharge temperature of the compressor exceeds its design trip temperature.

Note: *The IOL will put the compressor back in operation once the compressor motor heat has dropped below the trip setting; however, a check of the refrigerant and electrical systems should be made to determine the cause and be corrected.*

Installation Checklist

Complete this checklist once the unit is installed to verify that all recommended procedures have been accomplished before starting the system. Do not operate the system until all items covered by this checklist are complete.

1. Inspect unit location for proper required service clearances.
2. Inspect unit location for proper free air clearances.
3. Inspect unit location for secure, level mounting position.

Refrigerant Piping

1. Properly sized/constructed liquid and suction lines connected to stubs at both the indoor and outdoor units?
2. Insulated the entire suction line?
3. Insulated portions of liquid line exposed to extremes in temperature?
4. Performed initial leak test?
5. Evacuated each refrigerant circuit to 500 microns?
6. Charged each circuit with proper amount of R-410A?

Electrical Wiring

1. Provided unit power wiring (with disconnect) to proper terminals in the unit control section?
2. Installed system indoor thermostat?
3. Installed system low voltage interconnecting wiring to proper terminals of outdoor unit, indoor unit and system thermostat?

Start-Up

Electromechanical Controls

Unit Model Number Digits 9 and 10 = 00, 0S, H0 and HS

Sequence of Operation

Once the unit is properly installed and pre-start procedures are complete, start the unit by turning the System Switch on the indoor thermostat to either HEAT, COOL or AUTO. The system should operate normally.

NOTICE

Equipment Damage!

Ensure the disconnect for the indoor air handler is closed before operating the system. Operating the outdoor unit without the indoor fan energized can cause unit trip-out on high pressure control and/or liquid flood back to the compressor.

General

Operation of the system cooling (and optional heating) cycles is controlled by the position of the system switch on the room thermostat. Once the system switch is placed in either the **HEAT** or **COOL** position, unit operation is automatic. The optional automatic changeover thermostat, when in the **AUTO** position, automatically changes to heat or cool with sufficient room temperature change.

Evaporator Fan (Indoor Supply Air)

The evaporator fan is controlled by an **ON/AUTO** switch on the room thermostat. With the switch positioned at **AUTO** and the system operating in the cooling mode, fan operation coincides with the cooling run cycles. If the system is equipped with heat and is operating in the heating mode while the fan switch is at **AUTO**, fan operation coincides with the heating run cycles. When the fan switch is positioned at **ON**, fan operation is continuous.

Cooling Mode

With the disconnect switch in the **ON** position, current is supplied to the compressor sump heater(s), phase monitor and control transformer. The sump heater(s) supplies heat to the compressor(s) during the **"Off"** cycle. The phase monitor looks at the incoming power to verify that there is no reversed phase, no phase imbalance, and no loss of phase. If the phase monitor detects any of these three conditions, it will shut off control voltage. The transformer steps down the line voltage to 24V for the low voltage control circuit. When the room thermostat system switch is positioned at **COOL** and the fan switch is at **AUTO**, the compressor contactor energizes on a call for cooling. When the contacts of the compressor contactor close, operation of the compressor and condenser fan begins. The evaporator fan contactor also energizes on a call for cooling and initiates evaporator fan operation.

On units with dual circuits, the second stage of cooling is initiated as a result of the 2-stage thermostat calling for additional cooling.

ReliaTel™ Controls

Unit Model Number Digits 9 and 10 = 0R, 0T, 0U, 0W, HR, HT, HU, and HW

Sequence of Operation

Once the unit is properly installed and pre-start procedures are complete, start the unit by turning the System Switch on the indoor thermostat to either HEAT, COOL or AUTO. The system should operate normally.

NOTICE

Equipment Damage!

Ensure the disconnect for the indoor air handler is closed before operating the system. Operating the outdoor unit without the indoor fan energized can cause unit trip-out on high pressure control and/or liquid flood back to the compressor.

The ReliaTel™ Control is a microelectronic control feature, which provides operating functions that are significantly different than conventional Electromechanical units. The ReliaTel™ Refrigeration Module **(RTRM)** uses Proportional/Integral control algorithms to perform specific unit functions that govern the unit operation in response to application conditions.

The RTRM provides compressor anti-short cycle timing functions through minimum **"Off"** and **"On"** timing to increase reliability, performance and to maximize unit efficiency. Upon power initialization, the RTRM performs self-diagnostic checks to ensure that all internal controls are functioning. It checks the configuration parameters against the components connected to the system. The system LED located on the RTRM module is turned **"On"** within one second after power-up if all internal operations are okay.

ReliaTel™ Control Cooling Mode

For Zone Sensor Control

When the system switch is set to the **COOL** position and the zone temperature rises above the cooling setpoint, the RTRM energizes the compressor contactor, provided the high and low pressure and the discharge temperature limit controls are closed. When the compressor contacts close, the compressor and the outdoor fan motor start to maintain the zone temperature to within ± 2°F of the sensor setpoint at the sensed location. On units with dual circuits, the second stage of cooling is initiated as a result of the Proportional/Integral control algorithms calling for additional cooling.

For Thermostat Control:

When the room thermostat system switch is positioned at **COOL** and the fan switch is at **AUTO**, the RTRM energizes the compressor contactor, provided the high and low pressure and the discharge temperature limit controls are closed. When the contacts of the compressor contactor close, operation of the compressor and condenser fan begins. The evaporator fan contactor also energizes on a call for cooling and initiates evaporator fan operation. On units with dual circuits, the second stage of cooling is initiated as a result of the 2-stage thermostat calling for additional cooling.

Note: *Irregular unit operation may occur when the unit is controlled with a triac-switching thermostat. Please review the approved thermostat vendor list for all recommended relay-switching thermostats.*

ReliaTel™ Control Evaporator Fan Operation

When the fan selection switch is set to the **AUTO** position, the RTRM energizes the evaporator fan relay coil approximately 1 second after energizing the compressor contactor coil in the cooling mode. In the heating mode, the RTRM energizes the evaporator fan relay coil approximately 1 second before energizing the electric heat contactors. The RTRM de-energizes the evaporator fan

relay coil approximately 60 seconds on dual compressor units and 80 seconds on single compressor units after the cooling requirement has been satisfied to enhance unit efficiency. When the heating cycle is terminated, the evaporator fan relay coil is de-energized at the same time as the heater contactors. When the fan selection switch is set to the **ON** position, the RTRM keeps the evaporator fan relay coil energized for continuous fan motor operation.

ReliaTel™ Control Heating Operation

Electric heat is factory disabled on all split systemunits with ReliaTel control (jumper placed between J2-1 and J2-2 RTRM inputs). To configure the unit for electric heat, cut or remove the jumper wire between J2-1 and J2-2 on the RTRM. All split system units with ReliaTel control are also configured from the factory for only 1-stage of electric heat (jumper placed between J1-3 and J1-6 RTRM inputs). To configure the unit for 2-stages of electric heat, cut or remove the jumper placed between J1-3 and J1-6 RTRM inputs.

When the system switch is set to the **HEAT** position and heating is required, the RTRM energizes the Heat 1 relay coil on the RTRM. When the Heat 1 relay contacts close, the first stage electric heat contactor is energized. If the first stage of electric heat cannot satisfy the heating requirement, the RTRM energizes the Heat 2 relay coil on the RTRM. When the Heat 2 relay contacts close, the second stage electric heat contactor is energized. The first and second stages of heat are cycled **"On"** and **"Off"** as required to maintain the zone.

Service Test Modes ReliaTel™ Controls

Test Modes

Upon power initialization, the RTRM performs self-diagnostic checks to ensure that all internal controls are functional. It also checks the configuration parameters against the components connected to the system. The system LED located on the RTRM module is turned "On" within one second of power-up if internal operation is okay.

Use one of the following "Test" procedures to bypass some time delays and to start the unit at the control panel. Each step of unit operation can be activated individually by temporarily shorting across the "Test" terminals for 2 to 3 seconds. The system LED located on the RTRM module will blink when the test mode has been initiated. The unit can be left in any "Test" step for up to one hour before it will automatically terminate, or it can be terminated by opening the main power disconnect switch. Once the test mode has been terminated, the system LED will glow continuously and the unit will revert to the "System" control.

There are three methods in which the "Service Test" can be cycled at LTB-Test 1(T1) and LTB-Test 2 (T2).

1. Step Test Mode

This method initiates the different components of the unit, one at a time, by temporarily shorting across the two test terminals for 2 to 3 seconds.

For the initial start-up of the unit, this method allows the technician to cycle a component **"On"** and have up to one hour to complete the check. Service Test Mode will be ignored if a short is present across Test 1 and Test 2 at start-up.

2. Resistance Test Mode

This method can be used for start-up when a decade box for variable resistance outputs is available. This method initiates the different components of the unit, one at a time, when a specific resistance value is placed across the two test terminals. The unit will remain in the specific test mode for approximately one hour even though the resistance is left on the test terminals.

Table 10. Service Test Guide for Component Operation

Test Step	Mode	Fan	Comp 1	Comp 2	Heat 1	Heat 2	Ohms
1	Fan	On	Off	Off	Off	Off	2.2K
2	Cool 1	On	On[a]	Off	Off	Off	4.7K
3[b]	Cool 2	On	On[a]	On[a]	Off	Off	6.8K
4[b]	Heat 1	On	Off	Off	On	Off	10K
5[b]	Heat 2	On	Off	Off	On	On	15K

(a) The condenser fans will operate any time a compressor is ON.
(b) Steps for optional accessories and non-applicable modes in unit will be skipped.

3. Auto Test Mode

This method is not recommended for start-up due to the short timing between individual component steps. This method initiates the different components of the unit, one at a time, when a fixed jumper is installed across the test terminals. The unit will start the first test step and change to the next step every 30 seconds. At the end of the test mode, control of the unit will automatically revert to the applied "System" control method. For unit test steps, test modes, and step resistance values to cycle the various components, refer to Table 10.

Troubleshooting

Trouble Shooting ReliaTel™ Controls

⚠ WARNING
Live Electrical Components!

During installation, testing, servicing and troubleshooting of this product, it may be necessary to work with live electrical components. Have a qualified licensed electrician or other individual who has been properly trained in handling live electrical components perform these tasks. Failure to follow all electrical safety precautions when exposed to live electrical components could result in death or serious injury.

The RTRM has the ability to provide the service personnel with some unit diagnostics and system status information.

Before turning the main power disconnect switch "Off," follow the steps below to check the ReliaTel™ Refrigeration Module (RTRM). All diagnostics & system status information stored in the RTRM will be lost when the main power is turned **"Off"**.

To prevent injury or death from electrocution, it is the responsibility of the technician to recognize this hazard and use extreme care when performing service procedures with the electrical power energized.

Note: *The J6 & J7 screw terminals must be tightened in order to accurately measure voltage in the required steps.*

1. Verify that the system LED on the RTRM is burning continuously. If the LED is lit, go to Step 3.
2. If the LED is not lit, verify that 24 VAC is present between J1-1 and J1-2. If 24 VAC is present, proceed to Step 3. If 24 VAC is not present, check the unit main power supply, check transformer (TNS1). Proceed to Step 3 if necessary.
3. Utilizing "Method 1" or "Method 2" in the "System Status Checkout Procedure" section, check the following:
   - System status
   - Heating status
   - Cooling status

Note: *If a System failure is indicated, proceed to Step 4. If no failures are indicated, proceed to Step 5.*

4. If a System failure is indicated, recheck Step 1 and Step 2. If the LED is not lit in Step 1, and 24 VAC is present in Step 2, then the RTRM has failed. Replace the RTRM.
5. If no failures are indicated, use one of the TEST mode procedures described in the "Unit Start-Up" section to start the unit. This procedure will allow you to check all of the RTRM outputs, and all of the external controls (relays, contactors, etc.) that the RTRM outputs energize, for each respective mode. Proceed to Step 6.
6. Step the system through all of the available modes, and verify operation of all outputs, controls, and modes. If a problem in operation is noted in any mode, you may leave the system in that mode for up to one hour while troubleshooting. Refer to the sequence of operations for each mode, to assist in verifying proper operation. Make the necessary repairs and proceed to Step 7 and Step 8.
7. If no abnormal operating conditions appear in the test mode, exit the test mode by turning the power "Off" at the main power disconnect switch.
8. Refer to the individual component test procedures if other microelectronic components are suspect.

System Status Checkout Procedure

"System Status" is checked by using one of the following two methods:

Method 1. If the Zone Sensor Module (ZSM) is equipped with a remote panel with LED status indication, you can check the unit within the space. If the ZSM does not have LED's, use Method 2. BAYSENS010B, BAYSENS011B, BAYSENS019A, BAYSENS020A, BAYSENS021A, BAYSENS023A, BAYSENS109 and BAYSENS110 all have the remote panel indication feature. The LED descriptions are listed below.

LED 1 (System)

- "On" during normal operation.
- "Off" if a system failure occurs or the LED fails.
- "Flashing" indicates test mode.

LED 2 (Heat)

- "On" when the heat cycle is operating.
- "Off" when the heat cycle terminates or the LED fails.
- "Flashing" indicates a heating failure.

LED 3 (Cool)

- "On" when the cooling cycle is operating.
- "Off" when the cooling cycle terminates or the LED fails.
- "Flashing" indicates a cooling failure.

The following information describes the complete listing of failure indication causes.

System Failure

Check the voltage between terminals 6 and 9 on J6, it should read approximately 32 VDC. If no voltage is present, a System failure has occurred. Refer to Step 4 in the previous section for the recommended troubleshooting procedure.

Cooling Failure

1. Cooling and heating set point (slide pot) on the zone sensor has failed. Refer to the "Zone Sensor Test Procedure" section.
2. Zone temperature thermistor ZTEMP on ZTS failed. Refer to the "Zone Sensor Test Procedure" section.
3. CC1 or CC2 24 VAC control circuit has opened, check CC1 & CC2 coils, and any of the controls below that apply to the unit (HPC1, HPC2, DTL1, DTL2).
4. LPC1 has opened during the 3 minute minimum "on time" during 4 consecutive compressor starts, check LPC1 or LPC2 by testing voltage between the J1-8 & J3-2 terminals on the RTRM and ground. If 24 VAC is present, the LPCs have not tripped. If no voltage is present, LPCs have tripped.

Simultaneous Heat and Cool Failure

⚠ WARNING
Live Electrical Components!

During installation, testing, servicing and troubleshooting of this product, it may be necessary to work with live electrical components. Have a qualified licensed electrician or other individual who has been properly trained in handling live electrical components perform these tasks. Failure to follow all electrical safety precautions when exposed to live electrical components could result in death or serious injury.

1. Emergency Stop is activated.

Method 2

The second method for determining system status is done by checking voltage readings at the RTRM (J6). The system indication descriptions and the approximate voltages are listed below.

System Failure

Measure the voltage between terminals J6-9 & J6-6.

- Normal Operation = approximately 32 VDC
- System Failure = less than 1 VDC, approximately 0.75 VDC
- Test Mode = voltage alternates between 32 VDC & 0.75 VDC

Heat Failure

Measure the voltage between terminals J6-7 & J6-6.

- Heat Operating = approximately 32 VDC
- Heat Off = less than 1 VDC, approximately 0.75 VDC
- Heating Failure = voltage alternates between 32 VDC & 0.75 VDC

Cool Failure

Measure the voltage between terminals J6-8 & J6-6.

- Cool Operating = approximately 32 VDC
- Cool Off = less than 1 VDC, approximately 0.75 VDC
- Cooling Failure = voltage alternates between 32 VDC & 0.75 VDC

To use LED's for quick status information at the unit, purchase a BAYSENS010B ZSM and connect wires with alligator clamps to terminals 6 through 10. Connected each respective terminal wire (6 through 10) from the Zone Sensor to the unit J6 terminals 6 through 10.

Note: *If the system is equipped with a programmable zone sensor, (BAYSENS019A, or BAYSENS023A), the LED indicators will not function while the BAYSENS010A is connected.*

Resetting Cooling and Heating Lockouts

Cooling Failures and Heating Lockouts are reset in an identical manner. Method 1 explains resetting the system from the space; Method 2 explains resetting the system at the unit.

Note: *Before resetting Cooling Failures and Heating Lockouts check the Failure Status Diagnostics by the methods previously explained. Diagnostics will be lost when the power to the unit is disconnected.*

Method 1

To reset the system from the space, turn the **MODE** selection switch at the zone sensor to the **OFF** position. After approximately 30 seconds, turn the **MODE** selection switch to the desired mode, i.e. **HEAT**, **COOL**, or **AUTO**.

Method 2

To reset the system at the unit, cycle the unit power by turning the disconnect switch **"Off"** and then **"On"**.

Lockouts can be cleared through the building management system. Refer to the building management system instructions for more information.

Zone Temperature Sensor (ZTS) Service Indicator

The ZSM SERVICE LED is a generic indicator that will signal the closing of a Normally Open switch at any time, providing the Indoor Motor (IDM) is operating. This indicator is usually used to indicate an airside fan failure.

The RTRM will ignore the closing of this Normally Open switch for 2 (±1) minutes. This helps prevent nuisance SERVICE LED indications.

Temperature Tests

Note: *These procedures are not for programmable or digital models and are conducted with the Zone Sensor Module electrically removed from the system.*

Test 1 - Zone Temperature Thermistor (ZTEMP)

This component can be tested by measuring the resistance between terminals 1 and 2 on the Zone Temperature Sensor. Below are some typical indoor temperatures, and corresponding resistive values.

Table 11. Typical Indoor Temperatures and Values

Zone Temperature	*Nominal Resistance*
50°F or 10.0°C	19.9 Kohms
55°F or 12.8°C	17.47 Kohms
60°F or 15.6°C	15.3 Kohms
65°F or 18.3°C	13.49 Kohms
70°F or 21.1°C	11.9 Kohms
75°F or 23.9°C	10.50 Kohms
80°F or 26.7°C	9.3 Kohms
85°F or 29.4°C	8.25 Kohms
90°F or 32.2°C	7.3 Kohms

Test 2 - Cooling Set Point (CSP) and Heating Set Point (HSP)

Cool SP = Terminals 2 and 3

Range = 100 to 900 Ohms approximate

Heat SP = Terminals 2 and 5

Range = 100 to 900 Ohms approximate

Table 12. Test 3 - System Mode and Fan Selection

Resistance Valves (Ohms)	Zone Sensor Unit/Fan Mode	Local Unit Mode	Local Fan Mode
2.32K	Off/Auto	Off	Auto
4.87K	Cool/Auto	Cool	Auto
7.68K	Auto/Auto	Auto	Auto
10.77K	Off/On	Off	On
13.32K	Cool/On	Cool	On
16.13K	Auto/On	Auto	On
19.48K	Heat/Auto	Heat	Auto
27.93K	Heat/On	Heat	On
35.0K	Emergency Heat/Auto	Emergency Heat	Auto
43.45K	Emergency Heat/On	Emergency Heat	On
Out of Range (Short)	INVALID/Short	Invalid (CV), Auto (VAV)	Invalid
Out of Range (Open)	INVALID/Open	Invalid (CV), Off (VAV)	Invalid

Test 3 - System Mode and Fan Selection

The combined resistance of the Mode selection switch and the Fan selection switch can be measured between terminals 2 and 4 on the Zone Sensor. The possible switch combinations are listed in Table 12, p. 49 with their corresponding resistance values.

Test 4 - LED Indicator Test, (SYS ON, HEAT, & COOL)

⚠ WARNING
Live Electrical Components!

During installation, testing, servicing and troubleshooting of this product, it may be necessary to work with live electrical components. Have a qualified licensed electrician or other individual who has been properly trained in handling live electrical components perform these tasks. Failure to follow all electrical safety precautions when exposed to live electrical components could result in death or serious injury.

Method 1

Testing the LED using a meter with diode test function. Test both forward and reverse bias. Forward bias should measure a voltage drop of 1.5 to 2.5 volts, depending on your meter. Reverse bias will show an Over Load, or open circuit indication if LED is functional.

Method 2

Testing the LED with an analog Ohmmeter. Connect Ohmmeter across LED in one direction, then reverse the leads for the opposite direction. The LED should have at least 100 times more resistance in reverse direction, as compared with the forward direction. If high resistance in both directions, LED is open. If low in both directions, LED is shorted.

Method 3

To test LED's with ZSM connected to unit, test voltages at LED terminals on ZSM. A measurement of 32 VDC, across an unlit LED, means the LED has failed.

Important: *Measurements should be made from LED common (ZSM terminal 6 to respective LED terminal). Refer to the Zone Sensor Module (ZSM) Terminal Identification table at the beginning of this section.*

Programmable & Digital Zone Sensor Test

Testing serial communication voltage

1. Verify 24 VAC is present between terminals J6-14 & J6-11.

⚠ WARNING
Live Electrical Components!

During installation, testing, servicing and troubleshooting of this product, it may be necessary to work with live electrical components. Have a qualified licensed electrician or other individual who has been properly trained in handling live electrical components perform these tasks. Failure to follow all electrical safety precautions when exposed to live electrical components could result in death or serious injury.

2. Disconnect wires from J6-11 and J6-12. Measure the voltage between J6-11 and J6-12, should be about 32 VDC.
3. Reconnect wires to terminals J6-11 and J6-12. Measure voltage again between J6-11 and J6-12, voltage should flash high and low every 0.5 seconds. The voltage on the low end will measure about 19 VDC, while the voltage on the high end will measure from approximately 24 to 38 VDC.
4. Verify all modes of operation, by running the unit through all of the steps in the "Test Modes" section discussed in "Unit Start-Up."
5. After verifying proper unit operation, exit the test mode. Turn the fan on continuously at the ZSM, by pressing the button with the fan symbol. If the fan comes on and runs continuously, the ZSM is good. If you are not able to turn the fan on, the ZSM is defective.

RLCI Loss of Communications

If the RLCI loses input from the building management system, the RTRM will control in the default mode after approximately 15 minutes. If the RTRM loses the Heating and Cooling setpoint input, the RTRM will control in the default mode instantaneously. The temperature sensing thermistor in the Zone Sensor Module is the only component required for the "Default Mode" to operate.

Maintenance

⚠ WARNING
Hazardous Voltage w/Capacitors!

Disconnect all electric power, including remote disconnects and discharge all motor start/run capacitors before servicing. Follow proper lockout/tagout procedures to ensure the power cannot be inadvertently energized. For variable frequency drives or other energy storing components provided by Trane or others, refer to the appropriate manufacturer's literature for allowable waiting periods for discharge of capacitors. Verify with an appropriate voltmeter that all capacitors have discharged. Failure to disconnect power and discharge capacitors before servicing could result in death or serious injury.

NOTICE
Operating Under Vacuum

Do not operate or apply power to the compressor while under a vacuum. Failure to follow these instructions will result in compressor failure.

Perform all of the indicated maintenance procedures at the intervals scheduled. This will prolong the life of the unit and reduce the possibility of costly equipment failure.

Monthly

Conduct the following maintenance inspections once per month.

1. Check unit wiring to ensure all connections are tight and that the wiring insulation is intact.
2. Inspect the condenser coils for dirt and debris. If the coils appear dirty, clean them.
3. With the unit operating in the cooling mode, check the suction and discharge pressures and compare them with Pressure Curve values in unit Service Facts. Record these readings on the "Maintenance Log."

Annually (Cooling Season)

The following maintenance procedures must be performed at the beginning of each cooling season to ensure efficient unit operation.

1. Perform all of the monthly maintenance inspections.
2. With the unit operating, check unit superheat and record the reading in the "Maintenance Log."
3. Remove any accumulation of dust and/or dirt from the unit casing.
4. Remove corrosion from any surface and repaint. Check the gasket around the control panel door to ensure it fits correctly and is in good condition to prevent water leakage.
5. Inspect the control panel wiring to ensure that all connections are tight and that the insulation is intact.

Note: *Condenser fan motors are permanently lubricated.*

6. Check refrigerant piping and fittings for leaks.
7. Inspect the condenser coils for dirt and debris. If the coils appear dirty, clean them.

Coil Cleaning

Regular coil maintenance, including annual cleaning-enhances the unit's operating efficiency by minimizing:

- compressor head pressure and amperage draw;
- water carryover;
- fan brake horsepower and
- static pressure losses.

At least once each year-or more often if the unit is located in a "dirty" environment-clean the evaporator and condenser coils using the instructions outlined below. Be sure to follow these instructions as closely as possible to avoid damaging the coils. To clean refrigerant coils, use a soft brush and a sprayer. Contact your local Parts Center for appropriate detergents.

1. Remove enough panels from the unit to gain safe access to coils.

⚠WARNING
No Step Surface!

Do not walk on the sheet metal base. Walking on the base could cause the supporting metal to collapse. Failure of the base could result in death or serious injury.

2. Straighten any bent coil fins with a fin comb.
3. Remove loose dirt and debris from both sides of the coil with a soft brush.
4. Mix the detergent with water according to the manufacturer's instructions. If desired, heat the solution to 150° F maximum to improve its cleansing capability.
5. Pour the cleaning solution into the sprayer.
6. Spray the leaving-airflow side of the coil first; then spray the opposite side of the coil. Allow the cleaning solution to stand on the coil for five minutes.
7. Rinse both sides of the coil with cool, clean water.
8. Inspect both sides of the coil; if it still appears to be dirty, repeat Steps 7 and 8.
9. Reinstall all of the components and panels removed in Step 1; then restore power to the unit.
10. Using a fin comb, straighten any coil fins that were inadvertently bent during the cleaning process.

Maintenance Log

Date	Ambient Temp. (°F)	Evaporator Entering Air		Compressor				Superheat (°F) (at compressor)		Subcooling (°F) (at service valve)	
				Suction Pressure		Discharge Pressure					
		Dry Bulb	Wet Bulb	(C1)	(C2)	(C1)	(C2)	Circuit #1	Circuit #2	Circuit #1	Circuit #2

Note: Perform each inspection once per month (during cooling season) while unit is operating

Warranty

For Commercial Unitary Equipment Rated Under 20 Tons and Related Accessories

Products Covered — This warranty is extended by Trane, and applies to the following products:

- All packaged and split system air conditioners and heat pumps have a rated capacity of less than 20 tons.
- All packaged combinations gas/electric air conditioners having a rated capacity of less than 20 tons.
- All packaged combination gas/electric air conditioners having a rated capacity of 1 ½ through 5 tons single phase electric power and used for commercial applications. (As used in this warranty, a commercial application is any application where the end purchaser uses the product for other than personal, family or household purposes.)
- All accessories for the above products which are sold by Trane and applied in accordance with Trane specifications.

Basic Warranty

The warrantor warrants for a period of twelve (12) months from the initial start-up or eighteen (18) months from date of shipment, whichever is sooner, that the products covered by this warranty (1) are free from defects in material and manufacture, and (2) have the capacities and ratings set forth in the warrantor's catalogs and bulletins.

Extended Four-Year Warranty On Compressors

The warrantor warrants for a period of four (4) years commencing twelve (12) months from date of installations or eighteen (18) months from date of shipment, whichever is sooner, that the compressor in any product covered by this warranty (1) is free from defects in material and manufacture, and (2) has the capacities and ratings set forth in the warrantor's catalogs and bulletins.

Exclusions And Limitations

The warrantor's obligations and liabilities under this warranty are limited to furnishing F.O.B. factory or warehouse at the warrantor-designated shipping point, freight allowed to Buyer's city (or port of export for shipments outside the conterminous United States) a replacement product or, at the option of the warrantor, parts for the repair of the product not conforming to this warranty and which have been returned to the warrantor.

The warrantor's warranty is conditional on the Customer providing written notice to the warrantor within thirty (30) days of the discovery of the defect. No product shall be returned to the warrantor without the warrantor's written permission. No liability whatever shall attach to warrantor until said products have been fully paid for and then said liability shall be limited to the purchase price of the equipment shown to be defective.

The warranty does not apply to any compressor or gas-fired heat exchanger which has been repaired or altered in such manner as, in the judgement of the warrantor, affects its stability or reliability. This warranty does not cover (1) any heat exchanger which has been fired with an improper type of fuel (2) a heat exchanger which is installed in a beauty parlor, dry cleaning establishment, de-greasing plant or in any corrosive atmosphere; or (3) any heat exchanger which is not shown to be defective by the warrantor's inspection.

This warranty does not cover damage due to accident, abuse, improper use, external causes, freezing, corrosion, erosion or deterioration.

Local transportation, related service labor, air filters, diagnosis calls, refrigerant and related items are not covered.

THE WARRANTY AND LIABILITY SET FORTH HEREIN ARE IN LIEU OF ALL OTHER WARRANTIES AND LIABILITIES, WHETHER IN CONTRACT OR IN NEGLIGENCE, EXPRESS OR IMPLIED, IN LAW OR IN FACT, INCLUDING IMPLIED WARRANTIES OR MERCHANTABILITY AND FITNESS FOR A PARTICULAR PURPOSE AND ANY IMPLIED WARRANTIES OTHERWISE ARISING FROM THE

COURSE OF DEALING OR TRADE. IN NO EVENT SHALL THE WARRANTOR BE LIABLE FOR ANY INCIDENTAL OR CONSEQUENTIAL DAMAGES.

The warrantor makes certain further warranty protection available on an optional, extra-cost basis. Any further warranty must be in writing. If you wish further help or information concerning this warranty, contact:

Trane — Warrantor, 2701 Wilma Rudolph Blvd., Clarksville, TN 37040

Commercial Equipment Rated 20 Tons and Larger and Related Accessories (Parts Only)

Products Covered — This warranty is extended by Trane, and applies only to commercial equipment rated 20 tons and larger and related accessories purchased and retained for use within the U.S.A. and Canada.

Warrantor warrants for a period of 12 months from initial start-up or 18 months from date of shipment, whichever is less, that the products covered by this warranty (1) are free from defects in material and manufacture, and (2) have the capacities and ratings set forth in catalogs and bulletins; provided, that no warranty is made against corrosion, erosion or deterioration.

Warrantor's obligations and liabilities under this warranty are limited to furnishing, F.O.B. factory replacement parts (or equipment at the option of Warrantor) for all Warrantor's products not conforming to this warranty. Warrantor shall not be obligated to pay for the cost of lost refrigerant. No liability whatever shall attach to Warrantor until said products have been paid for and then said liability shall be limited to the purchase price of the equipment shown to be defective.

The Warranty and Liability set forth herein are in lieu of all other warranties and liabilities, whether in contract or in negligence, express or implied, in law or in fact, including implied warranties of merchantability and fitness for particular use, and in no event shall warrantor be liable for any incidental or consequential damages

Some states do not allow limitations on how long an implied warranty lasts or do not allow the exclusion or limitation of incidental or consequential damages, so the above limitation or exclusion may not apply to you. This warranty gives you specific legal rights, and you may also have other rights which vary from state to state.

Trane — Warrantor, 2701 Wilma Rudolph Blvd., Clarksville, TN 37040

GW-598-4799

Wiring Diagram Matrix

Note: *Wiring diagrams are available through e-Library or by contacting your local sales office.*

DIAGRAM NO.	DIAGRAM TYPE	UNIT MODEL NO'S
2313-0403	Power/Control Diagram	TTA061DD0RAA, TTA061DD0TAA, TTA061DDHRAA, TTA061DDHTAA, TTA061DD0UAA, TTA061DD0WAA, TTA061DDHUAA, TTA061DDHWAA, TTA073D30RAA, TTA073D30TAA, TTA073D3HRAA, TTA073D3HTAA, TTA073D30UAA, TTA073D30WAA, TTA073D3HUAA, TTA073D3HWAA, TTA073D40RAA, TTA073D40TAA, TTA073D4HRAA, TTA073D4HTAA, TTA073D40UAA, TTA073D40WAA, TTA073D4HUAA, TTA073D4HWAA, TTA073DW0RAA, TTA073DW0TAA, TTA073DWHRAA, TTA073DWHTAA, TTA073DW0UAA, TTA073DW0WAA, TTA073DWHUAA, TTA073DWHWAA, TTA073DK0RAA, TTA073DK0TAA, TTA073DKHRAA, TTA073DKHTAA, TTA073DK0UAA, TTA073DK0WAA, TTA073DKHUAA, TTA073DKHWAA, TTA086DD0RAA, TTA086DD0TAA, TTA086DDHRAA, TTA086DDHTAA, TTA086DD0UAA, TTA086DD0WAA, TTA086DDHUAA, TTA086DDHWAA, TTA076DD0RAA, TTA076DD0TAA, TTA076DDHRAA, TTA076DDHTAA, TTA076DD0UAA, TTA076DD0WAA, TTA076DDHUAA, TTA076DDHWAA, TTA090D30RAA, TTA090D30TAA, TTA090D3HRAA, TTA090D3HTAA, TTA090D30UAA, TTA090D30WAA, TTA090D3HUAA, TTA090D3HWAA, TTA090D40RAA, TTA090D40TAA, TTA090D4HRAA, TTA090D4HTAA, TTA090D40UAA, TTA090D40WAA, TTA090D4HUAA, TTA090D4HWAA, TTA090DW0RAA, TTA090DW0TAA, TTA090DWHRAA, TTA090DWHTAA, TTA090DW0UAA, TTA090DW0WAA, TTA090DWHUAA, TTA090DWHWAA, TTA090DK0RAA, TTA090DK0TAA, TTA090DKHRAA, TTA090DKHTAA, TTA090DK0UAA, TTA090DK0WAA, TTA090DKHUAA, TTA090DKHWAA, TTA101DD0RAA, TTA101DD0TAA, TTA101DDHRAA, TTA101DDHTAA, TTA101DD0UAA, TTA101DD0WAA, TTA101DDHUAA, TTA101DDHWAA, TTA120D40RAA, TTA120D40TAA, TTA120D4HRAA, TTA120D4HTAA, TTA120D40UAA, TTA120D40WAA, TTA120D4HUAA, TTA120D4HWAA, TTA120DW0RAA, TTA120DW0TAA, TTA120DWHRAA, TTA120DWHTAA, TTA120DW0UAA, TTA120DW0WAA, TTA120DWHUAA, TTA120DWHWAA, TTA120DK0RAA, TTA120DK0TAA, TTA120DKHRAA, TTA120DKHTAA, TTA120DK0UAA, TTA120DK0WAA, TTA120DKHUAA, TTA120DKHWAA, TTA156ED0RAA, TTA156ED0TAA, TTA156EDHRAA, TTA156EDHTAA, TTA156ED0UAA, TTA156ED0WAA, TTA156EDHUAA, TTA156EDHWAA, TTA180E30RAA, TTA180E30TAA, TTA180E3HRAA, TTA180E3HTAA, TTA180E30UAA, TTA180E30WAA, TTA180E3HUAA, TTA180E3HWAA, TTA180E40RAA, TTA180E40TAA, TTA180E4HRAA, TTA180E4HTAA, TTA180E40UAA, TTA180E40WAA, TTA180E4HUAA, TTA180E4HWAA, TTA180EW0RAA, TTA180EW0TAA, TTA180EWHRAA, TTA180EWHTAA, TTA180EW0UAA, TTA180EW0WAA, TTA180EWHUAA, TTA180EWHWAA, TTA180EK0RAA, TTA180EK0TAA, TTA180EKHRAA, TTA180EKHTAA, TTA180EK0UAA, TTA180EK0WAA, TTA180EKHUAA, TTA180EKHWAA, TTA201ED0RAA, TTA201ED0TAA, TTA201EDHRAA, TTA201EDHTAA, TTA201ED0UAA, TTA201ED0WAA, TTA201EDHUAA, TTA201EDHWAA, TTA240E40RAA, TTA240E40TAA, TTA240E4HRAA, TTA240E4HTAA, TTA240E40UAA, TTA240E40WAA, TTA240E4HUAA, TTA240E4HWAA, TTA240EW0RAA, TTA240EW0TAA, TTA240EWHRAA, TTA240EWHTAA, TTA240EW0UAA, TTA240EW0WAA, TTA240EWHUAA, TTA240EWHWAA, TTA240EK0RAA, TTA240EK0TAA, TTA240EKHRAA, TTA240EKHTAA, TTA240EK0UAA, TTA240EK0WAA, TTA240EKHUAA, TTA240EKHWAA
2313-0404	Power/Control Diagram	TTA156ED0RAA, TTA156ED0TAA, TTA156EDHRAA, TTA156EDHTAA, TTA156ED0UAA, TTA156ED0WAA, TTA156EDHUAA, TTA156EDHWAA, TTA180E30RAA, TTA180E30TAA, TTA180E3HRAA, TTA180E3HTAA, TTA180E30UAA, TTA180E30WAA, TTA180E3HUAA, TTA180E3HWAA, TTA180E40RAA, TTA180E40TAA, TTA180E4HRAA, TTA180E4HTAA, TTA180E40UAA, TTA180E40WAA, TTA180E4HUAA, TTA180E4HWAA, TTA180EW0RAA, TTA180EW0TAA, TTA180EWHRAA, TTA180EWHTAA, TTA180EW0UAA, TTA180EW0WAA, TTA180EWHUAA, TTA180EWHWAA, TTA180EK0RAA, TTA180EK0TAA, TTA180EKHRAA, TTA180EKHTAA, TTA180EK0UAA, TTA180EK0WAA, TTA180EKHUAA, TTA180EKHWAA, TTA201ED0RAA, TTA201ED0TAA, TTA201EDHRAA, TTA201EDHTAA, TTA201ED0UAA, TTA201ED0WAA, TTA201EDHUAA, TTA201EDHWAA, TTA240E40RAA, TTA240E40TAA, TTA240E4HRAA, TTA240E4HTAA, TTA240E40UAA, TTA240E40WAA, TTA240E4HUAA, TTA240E4HWAA, TTA240EW0RAA, TTA240EW0TAA, TTA240EWHRAA, TTA240EWHTAA, TTA240EW0UAA,TTA240EW0WAA, TTA240EWHUAA, TTA240EWHWAA, TTA240EK0RAA, TTA240EK0TAA, TTA061DD00AA, TTA061DD0SAA, TTA061DDH0AA, TTA061DDHSAA, TTA073D300AA, TTA073D30SAA, TTA073D3H0AA, TTA073D3HSAA, TTA073D400AA, TTA073D40SAA, TTA073D4H0AA, TTA073D4HSAA, TTA073DW00AA, TTA073DW0SAA, TTA073DWH0AA, TTA073DWHSAA, TTA073DK00AA, TTA073DK0SAA, TTA073DKH0AA, TTA073DKHSAA, TTA086DD00AA, TTA086DD0SAA, TTA086DDH0AA, TTA086DDHSAA, TTA076DD00AA, TTA076DD0SAA, TTA076DDH0AA, TTA076DDHSAA, TTA090D300AA, TTA090D30SAA, TTA090D3H0AA, TTA090D3HSAA, TTA090D400AA, TTA090D40SAA, TTA090D4H0AA, TTA090D4HSAA, TTA090DW00AA, TTA090DW0SAA, TTA090DWH0AA, TTA090DWHSAA, TTA090DK00AA, TTA090DK0SAA, TTA090DKH0AA, TTA090DKHSAA, TTA101DD00AA,TTA101DD0SAA, TTA101DDH0AA, TTA101DDHSAA, TTA120D400AA, TTA120D40SAA, TTA120D4H0AA, TTA120D4HSAA, TTA120DW00AA, TTA120DW0SAA, TTA120DWH0AA, TTA120DWHSAA, TTA120DK00AA, TTA120DK0SAA, TTA120DKH0AA, TTA120DKHSAA, TTA156ED00AA, TTA156ED0SAA, TTA156EDH0AA, TTA156EDHSAA, TTA180E300AA, TTA180E30SAA, TTA180E3H0AA, TTA180E3HSAA, TTA180E400AA, TTA180E40SAA, TTA180E4H0AA, TTA180E4HSAA, TTA180EW00AA, TTA180EW0SAA, TTA180EWH0AA, TTA180EWHSAA, TTA240EW00AA, TTA240EW0SAA, TTA180EK00AA, TTA180EK0SAA, TTA180EKH0AA, TTA180EKHSAA, TTA201ED00AA, TTA201ED0SAA, TTA201EDH0AA, TTA201EDHSAA, TTA240E400AA, TTA240E40SAA, TTA240E4H0AA, TTA240E4HSAA, TTA240EW00AA, TTA240EW0SAA, TTA240EWH0AA, TTA240EWHSAA, TTA240EK00AA, TTA240EK0SAA, TTA240EKH0AA, TTA240EKHSAA
2313-0407	Power/Control Diagram	TTA120D30RAA, TTA120D30TAA, TTA120D3HRAA, TTA120D3HTAA, TTA120D30UAA, TTA120D30WAA, TTA120D3HUAA, TTA120D3HWAA, TTA240E30RAA, TTA240E30TAA, TTA240E3HRAA, TTA240E3HTAA, TTA240E30UAA, TTA240E30WAA, TTA240E3HUAA, TTA240E3HWAA
2313-0408	Power/Control Diagram	TTA120D300AA, TTA120D30SAA, TTA120D3H0AA, TTA120D3HSAA, TTA240E300AA, TTA240E30SAA, TTA240E3H0AA, TTA240E3HSAA
2313-0409	Power/Control Diagram	TTA240F300AA, TTA240F30SAA, TTA240F3H0AA, TTA240F3HSAA
2313-0410	Power/Control Diagram	TTA240F30RAA, TTA240F30TAA, TTA240F3HRAA, TTA240F3HTAA, TTA240F30UAA, TTA240F30WAA, TTA240F3HUAA, TTA240F3HWAA

DIAGRAM NO.	DIAGRAM TYPE	UNIT MODEL NO'S
2313-0411	Power/Control Diagram	TTA101FD0RAA, TTA101FD0TAA, TTA101FDHRAA, TTA101FDHTAA, TTA101FD0UAA, TTA101FD0WAA, TTA101FDHUAA, TTA101FDHWAA, TTA120F30RAA, TTA120F30TAA, TTA120F3HRAA, TTA120F3HTAA, TTA120F30UAA, TTA120F30WAA, TTA120F3HUAA, TTA120F3HWAA, TTA120F40RAA, TTA120F40TAA, TTA120F4HRAA, TTA120F4HTAA, TTA120F40UAA, TTA120F40WAA, TTA120F4HUAA, TTA120F4HWAA, TTA120FW0RAA, TTA120FW0TAA, TTA120FWHRAA, TTA120FWHTAA, TTA120FW0UAA, TTA120FW0WAA, TTA120FWHUAA, TTA120FWHWAA, TTA156FD0RAA, TTA156FD0TAA, TTA156FDHRAA, TTA156FDHTAA, TTA156FD0UAA, TTA156FD0WAA, TTA156FDHUAA, TTA156FDHWAA, TTA180F30RAA, TTA180F30TAA, TTA180F3HRAA, TTA180F3HTAA, TTA180F30UAA, TTA180F30WAA, TTA180F3HUAA, TTA180F3HWAA, TTA180F40RAA, TTA180F40TAA, TTA180F4HRAA, TTA180F4HTAA, TTA180F40UAA, TTA180F40WAA, TTA180F4HUAA, TTA180F4HWAA, TTA180FW0RAA, TTA180FW0TAA, TTA180FWHRAA, TTA180FWHTAA, TTA180FW0UAA, TTA180FW0WAA, TTA180FWHUAA, TTA180FWHWAA, TTA180FK0RAA, TTA180FK0TAA, TTA180FKHRAA, TTA180FKHTAA, TTA180FK0UAA, TTA180FK0WAA, TTA180FKHUAA, TTA180FKHWAA, TTA201FD0RAA, TTA201FD0TAA, TTA201FDHRAA, TTA201FDHTAA, TTA201FD0UAA, TTA201FD0WAA, TTA201FDHUAA, TTA201FDHWAA, TTA240F40RAA, TTA240F40TAA, TTA240F4HRAA, TTA240F4HTAA, TTA240F40UAA, TTA240F40WAA, TTA240F4HUAA, TTA240F4HWAA, TTA240FW0RAA, TTA240FW0TAA, TTA240FWHRAA, TTA240FWHTAA, TTA240FW0UAA, TTA240FW0WAA, TTA240FWHUAA, TTA240FWHWAA, TTA240FK0RAA, TTA240FK0TAA, TTA240FKHRAA, TTA240FKHTAA, TTA240FK0UAA, TTA240FK0WAA, TTA240FKHUAA, TTA240FKHWAA
2313-0412	Power/Control Diagram	TTA101FD00AA, TTA101FD0SAA, TTA101FDH0AA, TTA101FDHSAA, TTA120F300AA, TTA120F30SAA, TTA120F3H0AA, TTA120F3HSAA, TTA120F400AA, TTA120F40SAA, TTA120F4H0AA, TTA120F4HSAA, TTA120FW00AA, TTA120FW0SAA, TTA120FWH0AA, TTA120FWHSAA, TTA156FD00AA, TTA156FD0SAA, TTA156FDH0AA, TTA156FDHSAA, TTA180F300AA, TTA180F30SAA, TTA180F3H0AA, TTA180F3HSAA, TTA180F400AA, TTA180F40SAA, TTA180F4H0AA, TTA180F4HSAA, TTA180FW00AA, TTA180FW0SAA, TTA180FWH0AA, TTA180FWHSAA, TTA180FK00AA, TTA180FK0SAA, TTA180FKH0AA, TTA180FKHSAA, TTA201FD00AA, TTA201FD0SAA, TTA201FDH0AA, TTA201FDHSAA, TTA240F400AA, TTA240F40SAA, TTA240F4H0AA, TTA240F4HSAA, TTA240FW00AA, TTA240FW0SAA, TTA240FWH0AA, TTA240FWHSAA, TTA240FK00AA, TTA240FK0SAA, TTA240FKH0AA, TTA240FKHSAA
2313-0413	Connection Diagram	TTA061DD00AA, TTA061DD0SAA, TTA061DDH0AA, TTA061DDHSAA, TTA073D300AA, TTA073D30SAA, TTA073D3H0AA, TTA073D3HSAA, TTA073D400AA, TTA073D40SAA, TTA073D4H0AA, TTA073D4HSAA, TTA073DW00AA, TTA073DW0SAA, TTA073DWH0AA, TTA073DWHSAA, TTA073DK00AA, TTA073DK0SAA, TTA073DKH0AA, TTA073DKHSAA, TTA086DD00AA, TTA086DD0SAA, TTA086DDH0AA, TTA086DDHSAA, TTA076DD00AA, TTA076DD0SAA, TTA076DDH0AA, TTA076DDHSAA, TTA090D300AA, TTA090D30SAA, TTA090D3H0AA, TTA090D3HSAA, TTA090D400AA, TTA090D40SAA, TTA090D4H0AA, TTA090D4HSAA, TTA090DW00AA, TTA090DW0SAA, TTA090DWH0AA, TTA090DWHSAA, TTA090DK00AA, TTA090DK0SAA, TTA090DKH0AA, TTA090DKHSAA, TTA101DD00AA, TTA101DD0SAA, TTA101DDH0AA, TTA101DDHSAA, TTA120D400AA, TTA120D40SAA, TTA120D4H0AA, TTA120D4HSAA, TTA120DW00AA, TTA120DW0SAA, TTA120DWH0AA, TTA120DWHSAA, TTA120DK00AA, TTA120DK0SAA, TTA120DKH0AA, TTA120DKHSAA
2313-0414	Connection Diagram	TTA120D300AA, TTA120D30SAA, TTA120D3H0AA, TTA120D3HSAA
2313-0415	Connection Diagram	TTA101FD00AA, TTA101FD0SAA, TTA101FDH0AA, TTA101FDHSAA, TTA120F300AA, TTA120F30SAA, TTA120F3H0AA, TTA120F3HSAA, TTA120F400AA, TTA120F40SAA, TTA120F4H0AA, TTA120F4HSAA, TTA120FW00AA, TTA120FW0SAA, TTA120FWH0AA, TTA120FWHSAA
2313-0416	Connection Diagram	TTA061DD0RAA, TTA061DD0TAA, TTA061DDHRAA, TTA061DDHTAA, TTA061DD0UAA, TTA061DD0WAA, TTA061DDHUAA, TTA061DDHWAA, TTA073D30RAA, TTA073D30TAA, TTA073D3HRAA, TTA073D3HTAA, TTA073D30UAA, TTA073D30WAA, TTA073D3HUAA, TTA073D3HWAA, TTA073D40RAA, TTA073D40TAA, TTA073D4HRAA, TTA073D4HTAA, TTA073D40UAA, TTA073D40WAA, TTA073D4HUAA, TTA073D4HWAA, TTA073DW0RAA, TTA073DW0TAA, TTA073DWHRAA, TTA073DWHTAA, TTA073DW0UAA, TTA073DW0WAA, TTA073DWHUAA, TTA073DWHWAA, TTA073DK0RAA, TTA073DK0TAA, TTA073DKHRAA, TTA073DKHTAA, TTA073DK0UAA, TTA073DK0WAA, TTA073DKHUAA, TTA073DKHWAA, TTA086DD0RAA, TTA086DD0TAA, TTA086DDHRAA, TTA086DDHTAA, TTA086DD0UAA, TTA086DD0WAA, TTA086DDHUAA, TTA086DDHWAA, TTA076DD0RAA, TTA076DD0TAA, TTA076DDHRAA, TTA076DDHTAA, TTA076DD0UAA, TTA076DD0WAA, TTA076DDHUAA, TTA076DDHWAA, TTA090D30RAA, TTA090D30TAA, TTA090D3HRAA, TTA090D3HTAA, TTA090D30UAA, TTA090D30WAA, TTA090D3HUAA, TTA090D3HWAA, TTA090D40RAA, TTA090D40TAA, TTA090D4HRAA, TTA090D4HTAA, TTA090D40UAA, TTA090D40WAA, TTA090D4HUAA, TTA090D4HWAA, TTA090DW0RAA, TTA090DW0TAA, TTA090DWHRAA, TTA090DWHTAA, TTA090DW0UAA, TTA090DW0WAA, TTA090DWHUAA, TTA090DWHWAA, TTA090DK0RAA, TTA090DK0TAA, TTA090DKHRAA, TTA090DKHTAA, TTA090DK0UAA, TTA090DK0WAA, TTA090DKHUAA, TTA090DKHWAA, TTA101DD0RAA, TTA101DD0TAA, TTA101DDHRAA, TTA101DDHTAA, TTA101DD0UAA, TTA101DD0WAA, TTA101DDHUAA, TTA101DDHWAA, TTA120D40RAA, TTA120D40TAA, TTA120D4HRAA, TTA120D4HTAA, TTA120D40UAA, TTA120D40WAA, TTA120D4HUAA, TTA120D4HWAA, TTA120DW0RAA, TTA120DW0TAA, TTA120DWHRAA, TTA120DWHTAA, TTA120DW0UAA, TTA120DW0WAA, TTA120DWHUAA, TTA120DWHWAA, TTA120DK0RAA, TTA120DK0TAA, TTA120DKHRAA, TTA120DKHTAA, TTA120DK0UAA, TTA120DK0WAA, TTA120DKHUAA, TTA120DKHWAA
2313-0417	Connection Diagram	TTA120D30RAA, TTA120D30TAA, TTA120D3HRAA, TTA120D3HTAA, TTA120D30UAA, TTA120D30WAA, TTA120D3HUAA, TTA120D3HWAA
2313-0418	Connection Diagram	TTA101FD0RAA, TTA101FD0TAA, TTA101FDHRAA, TTA101FDHTAA, TTA101FD0UAA, TTA101FD0WAA, TTA101FDHUAA, TTA101FDHWAA, TTA120F30RAA, TTA120F30TAA, TTA120F3HRAA, TTA120F3HTAA, TTA120F30UAA, TTA120F30WAA, TTA120F3HUAA, TTA120F3HWAA, TTA120F40RAA, TTA120F40TAA, TTA120F4HRAA, TTA120F4HTAA, TTA120F40UAA, TTA120F40WAA, TTA120F4HUAA, TTA120F4HWAA, TTA120FW0RAA, TTA120FW0TAA, TTA120FWHRAA, TTA120FWHTAA, TTA120FW0UAA, TTA120FW0WAA, TTA120FWHUAA, TTA120FWHWAA

Wiring Diagram Matrix

DIAGRAM NO.	DIAGRAM TYPE	UNIT MODEL NO'S
2313-0421	Connection Diagram	TTA156ED00AA, TTA156ED0SAA, TTA156EDH0AA, TTA156EDHSAA, TTA180E300AA, TTA180E30SAA, TTA180E3H0AA, TTA180E3HSAA, TTA180E400AA, TTA180E40SAA, TTA180E4H0AA, TTA180E4HSAA, TTA180EW00AA, TTA180EW0SAA, TTA180EWH0AA, TTA180EWHSAA, TTA240EW00AA, TTA240EW0SAA, TTA180EK00AA, TTA180EK0SAA, TTA180EKH0AA, TTA180EKHSAA, TTA201ED00AA, TTA201ED0SAA, TTA201EDH0AA, TTA201EDHSAA, TTA240E400AA, TTA240E40SAA, TTA240E4H0AA, TTA240E4HSAA, TTA240EW00AA, TTA240EW0SAA, TTA240EWH0AA, TTA240EWHSAA, TTA240EK00AA, TTA240EK0SAA, TTA240EKH0AA, TTA240EKHSAA
2313-0422	Connection Diagram	TTA240E300AA, TTA240E30SAA, TTA240E3H0AA, TTA240E3HSAA
2313-0423	Connection Diagram	TTA156FD00AA, TTA156FD0SAA, TTA156FDH0AA, TTA156FDHSAA, TTA180F300AA, TTA180F30SAA, TTA180F3H0AA, TTA180F3HSAA, TTA180F400AA, TTA180F40SAA, TTA180F4H0AA, TTA180F4HSAA, TTA180FW00AA, TTA180FW0SAA, TTA180FWH0AA, TTA180FWHSAA, TTA180FK00AA, TTA180FK0SAA, TTA180FKH0AA, TTA180FKHSAA, TTA201FD00AA, TTA201FD0SAA, TTA201FDH0AA, TTA201FDHSAA, TTA240F400AA, TTA240F40SAA, TTA240F4H0AA, TTA240F4HSAA, TTA240FW00AA, TTA240FW0SAA, TTA240FWH0AA, TTA240FWHSAA, TTA240FK00AA, TTA240FK0SAA, TTA240FKH0AA, TTA240FKHSAA
2313-0424	Connection Diagram	TTA240F300AA, TTA240F30SAA, TTA240F3H0AA, TTA240F3HSAA
2313-0425	Connection Diagram	TTA156ED0RAA, TTA156ED0TAA, TTA156EDHRAA, TTA156EDHTAA, TTA156ED0UAA, TTA156ED0WAA, TTA156EDHUAA, TTA156EDHWAA, TTA180E30RAA, TTA180E30TAA, TTA180E3HRAA, TTA180E3HTAA, TTA180E30UAA, TTA180E30WAA, TTA180E3HUAA, TTA180E3HWAA, TTA180E40RAA, TTA180E40TAA, TTA180E4HRAA, TTA180E4HTAA, TTA180E40UAA, TTA180E40WAA, TTA180E4HUAA, TTA180E4HWAA, TTA180EW0RAA, TTA180EW0TAA, TTA180EWHRAA, TTA180EWHTAA, TTA180EW0UAA, TTA180EW0WAA, TTA180EWHUAA, TTA180EWHWAA, TTA180EK0RAA, TTA180EK0TAA, TTA180EKHRAA, TTA180EKHTAA, TTA180EK0UAA, TTA180EK0WAA, TTA180EKHUAA, TTA180EKHWAA, TTA201ED0RAA, TTA201ED0TAA, TTA201EDHRAA, TTA201EDHTAA, TTA201ED0UAA, TTA201ED0WAA, TTA201EDHUAA, TTA201EDHWAA, TTA240E40RAA, TTA240E40TAA, TTA240E4HRAA, TTA240E4HTAA, TTA240E40UAA, TTA240E40WAA, TTA240E4HUAA, TTA240E4HWAA, TTA240EW0RAA, TTA240EW0TAA, TTA240EWHRAA, TTA240EWHTAA, TTA240EW0UAA, TTA240EW0WAA, TTA240EWHUAA, TTA240EWHWAA, TTA240EK0RAA, TTA240EK0TAA, TTA240EKHRAA, TTA240EKHTAA, TTA240EK0UAA, TTA240EK0WAA, TTA240EKHUAA, TTA240EKHWAA
2313-0426	Connection Diagram	TTA240E30RAA, TTA240E30TAA, TTA240E3HRAA, TTA240E3HTAA, TTA240E30UAA, TTA240E30WAA, TTA240E3HUAA, TTA240E3HWAA
2313-0427	Connection Diagram	TTA156FD0RAA, TTA156FD0TAA, TTA156FDHRAA, TTA156FDHTAA, TTA156FD0UAA, TTA156FD0WAA, TTA156FDHUAA, TTA156FDHWAA, TTA180F30RAA, TTA180F30TAA, TTA180F3HRAA, TTA180F3HTAA, TTA180F30UAA, TTA180F30WAA, TTA180F3HUAA, TTA180F3HWAA, TTA180F40RAA, TTA180F40TAA, TTA180F4HRAA, TTA180F4HTAA, TTA180F40UAA, TTA180F40WAA, TTA180F4HUAA, TTA180F4HWAA, TTA180FW0RAA, TTA180FW0TAA, TTA180FWHRAA, TTA180FWHTAA, TTA180FW0UAA, TTA180FW0WAA, TTA180FWHUAA, TTA180FWHWAA, TTA180FK0RAA, TTA180FK0TAA, TTA180FKHRAA, TTA180FKHTAA, TTA180FK0UAA, TTA180FK0WAA, TTA180FKHUAA, TTA180FKHWAA, TTA201FD0RAA, TTA201FD0TAA, TTA201FDHRAA, TTA201FDHTAA, TTA201FD0UAA, TTA201FD0WAA, TTA201FDHUAA, TTA201FDHWAA, TTA240F40RAA, TTA240F40TAA, TTA240F4HRAA, TTA240F4HTAA, TTA240F40UAA, TTA240F40WAA, TTA240F4HUAA, TTA240F4HWAA, TTA240FW0RAA, TTA240FW0TAA, TTA240FWHRAA, TTA240FWHTAA, TTA240FW0UAA, TTA240FW0WAA, TTA240FWHUAA, TTA240FWHWAA, TTA240FK0RAA, TTA240FK0TAA, TTA240FKHRAA, TTA240FKHTAA, TTA240FK0UAA, TTA240FK0WAA, TTA240FKHUAA, TTA240FKHWAA
2313-0428	Connection Diagram	TTA240F30RAA, TTA240F30TAA, TTA240F3HRAA, TTA240F3HTAA, TTA240F30UAA, TTA240F30WAA, TTA240F3HUAA, TTA240F3HWAA
2313-0433	Power/Control Diagram	TTA101ED00AA, TTA101ED0SAA, TTA101EDH0AA, TTA101EDHSAA, TTA120E300AA, TTA120E30SAA, TTA120E3H0AA, TTA120E3HSAA, TTA120E400AA, TTA120E40SAA, TTA120E4H0AA, TTA120E4HSAA, TTA120EW00AA, TTA120EW0SAA, TTA120EWH0AA, TTA120EWHSAA, TTA120EK00AA, TTA120EK0SAA, TTA120EKH0AA, TTA120EKHSAA, TTA126ED00AA, TTA126ED0SAA, TTA126EDH0AA, TTA126EDHSAA, TTA150E300AA, TTA150E30SAA, TTA150E3H0AA, TTA150E3HSAA, TTA150E400AA, TTA150E40SAA, TTA150E4H0AA, TTA150E4HSAA, TTA150EW00AA, TTA150EW0SAA, TTA150EWH0AA, TTA150EWHSAA, TTA150EK00AA, TTA150EK0SAA, TTA150EKH0AA, TTA150EKHSAA
2313-0434	Connection Diagram	TTA101ED00AA, TTA101ED0SAA, TTA101EDH0AA, TTA101EDHSAA, TTA120E300AA, TTA120E30SAA, TTA120E3H0AA, TTA120E3HSAA, TTA120E400AA, TTA120E40SAA, TTA120E4H0AA, TTA120E4HSAA, TTA120EW00AA, TTA120EW0SAA, TTA120EWH0AA, TTA120EWHSAA, TTA120EK00AA, TTA120EK0SAA, TTA120EKH0AA, TTA120EKHSAA, TTA126ED00AA, TTA126ED0SAA, TTA126EDH0AA, TTA126EDHSAA, TTA150E300AA, TTA150E30SAA, TTA150E3H0AA, TTA150E3HSAA, TTA150E400AA, TTA150E40SAA, TTA150E4H0AA, TTA150E4HSAA, TTA150EW00AA, TTA150EW0SAA, TTA150EWH0AA, TTA150EWHSAA, TTA150EK00AA, TTA150EK0SAA, TTA150EKH0AA, TTA150EKHSAA

DIAGRAM NO.	DIAGRAM TYPE	UNIT MODEL NO'S
2313-0435	Power/Control Diagram	TTA101ED0RAA, TTA101ED0TAA, TTA101EDHRAA, TTA101EDHTAA, TTA101ED0UAA, TTA101ED0WAA, TTA101EDHUAA, TTA101EDHWAA, TTA120E30RAA, TTA120E30TAA, TTA120E3HRAA, TTA120E3HTAA, TTA120E30UAA, TTA120E30WAA, TTA120E3HUAA, TTA120E3HWAA, TTA120E40RAA, TTA120E40TAA, TTA120E4HRAA, TTA120E4HTAA, TTA120E40UAA, TTA120E40WAA, TTA120E4HUAA, TTA120E4HWAA, TTA120EW0RAA, TTA120EW0TAA, TTA120EWHRAA, TTA120EWHTAA, TTA120EW0UAA, TTA120EW0WAA, TTA120EWHUAA, TTA120EWHWAA, TTA120EK0RAA, TTA120EK0TAA, TTA120EKHRAA, TTA120EKHTAA, TTA120EK0UAA, TTA120EK0WAA, TTA120EKHUAA, TTA120EKHWAA, TTA126ED0RAA, TTA126ED0TAA, TTA126EDHRAA, TTA126EDHTAA, TTA126ED0UAA, TTA126ED0WAA, TTA126EDHUAA, TTA126EDHWAA, TTA150E30RAA, TTA150E30TAA, TTA150E3HRAA, TTA150E3HTAA, TTA150E30UAA, TTA150E30WAA, TTA150E3HUAA, TTA150E3HWAA, TTA150E40RAA, TTA150E40TAA, TTA150E4HRAA, TTA150E4HTAA, TTA150E40UAA, TTA150E40WAA, TTA150E4HUAA, TTA150E4HWAA, TTA150EW0RAA, TTA150EW0TAA, TTA150EWHRAA, TTA150EWHTAA, TTA150EW0UAA, TTA150EW0WAA, TTA150EWHUAA, TTA150EWHWAA, TTA150EK0RAA, TTA150EK0TAA, TTA150EKHRAA, TTA150EKHTAA, TTA150EK0UAA, TTA150EK0WAA, TTA150EKHUAA, TTA150EKHWAA
2313-0436	Connection Diagram	TTA101ED0RAA, TTA101ED0TAA, TTA101EDHRAA, TTA101EDHTAA, TTA101ED0UAA, TTA101ED0WAA, TTA101EDHUAA, TTA101EDHWAA, TTA120E30RAA, TTA120E30TAA, TTA120E3HRAA, TTA120E3HTAA, TTA120E30UAA, TTA120E30WAA, TTA120E3HUAA, TTA120E3HWAA, TTA120E40RAA, TTA120E40TAA, TTA120E4HRAA, TTA120E4HTAA, TTA120E40UAA, TTA120E40WAA, TTA120E4HUAA, TTA120E4HWAA, TTA120EW0RAA, TTA120EW0TAA, TTA120EWHRAA, TTA120EWHTAA, TTA120EW0UAA, TTA120EW0WAA, TTA120EWHUAA, TTA120EWHWAA, TTA120EK0RAA, TTA120EK0TAA, TTA120EKHRAA, TTA120EKHTAA, TTA120EK0UAA, TTA120EK0WAA, TTA120EKHUAA, TTA120EKHWAA, TTA126ED0RAA, TTA126ED0TAA, TTA126EDHRAA, TTA126EDHTAA, TTA126ED0UAA, TTA126ED0WAA, TTA126EDHUAA, TTA126EDHWAA, TTA150E30RAA, TTA150E30TAA, TTA150E3HRAA, TTA150E3HTAA, TTA150E30UAA, TTA150E30WAA, TTA150E3HUAA, TTA150E3HWAA, TTA150E40RAA, TTA150E40TAA, TTA150E4HRAA, TTA150E4HTAA, TTA150E40UAA, TTA150E40WAA, TTA150E4HUAA, TTA150E4HWAA, TTA150EW0RAA, TTA150EW0TAA, TTA150EWHRAA, TTA150EWHTAA, TTA150EW0UAA, TTA150EW0WAA, TTA150EWHUAA, TTA150EWHWAA, TTA150EK0RAA, TTA150EK0TAA, TTA150EKHRAA, TTA150EKHTAA, TTA150EK0UAA, TTA150EK0WAA, TTA150EKHUAA, TTA150EKHWAA

Note: Wiring diagrams are available via e-Library.

Digitally printed on environmentally friendly paper; produced using fewer trees and chemicals and less energy.

Literature Order Number	SS-SVX10A-EN
Date	November 2009
Supersedes	SS-SVX10A-EN (August 2009)

The manufacturer has a policy of continuous product and product data improvement and reserves the right to change design and specifications without notice. Only qualified technicians should perform the installation and servicing of equipment referred to in this literature.

Tag: P3A, P6A & P6B

Specification:

Manufacture: Little Giant Condensate Drain Pumps

Drawing reference:

Location: B2 & B3 Ramp Levels

LITTLE GIANT Condensate, Mini-Split

Pumps > Condensate Pumps > Condensate Pumps

Mini-Split Condensate Pump, Voltage 230, Current Rating 0.12 Amp, Flow @ 1 Foot of Head 4 GPH, Shut Off Feet of Head 40, Tank Material ABS Plastic, Not for Flammable Liquids, Pumpcontrol - Width 1.75 Inches, Length 1.375 Inches, Height 4.375 Inches, Reservoir - Width 1.375, Length 1.5, Height 3.25 Icludes pump/controller, reservoir, scution, vent and drain tubing

Grainger Item #	3XY18
Price (ea.)	$155.25
Brand	LITTLE GIANT
Mfr. Model #	EC-400
Ship Qty.	1
Sell Qty. (Will-Call)	1
Ship Weight (lbs.)	1.0
Availability	Ready to Ship
Catalog Page No.	3952
Country of Origin (Country of Origin is subject to change.)	USA

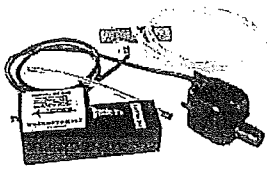

See Notes & Restrictions for important safety information.

Enlarge Image

Qty.

Add Grainger TripleGuard® repair & replacement coverage for $35.95 each.

Add to Order | Add to Personal List | Compare Alternates

Price shown may not reflect your price. Sign In or register.

When can I get it? Use your ZIP code to estimate availability.

Qty: ZIP code: GO

Tech Specs | Additional Information | Compliance & Restrictions | MSDS | Required Accessories | Optional Accessories | Alternate Products | Repair Parts

Item	Condensate Removal Pump
Type	Mini Split
Watts	20
Voltage	230
Amps	12.0
Height (In.)	3-1/4
Length (In.)	1-1/2
Width (In.)	1-3/8
Discharge	5/32"
Float Material	Polystyrene
GPH of Water @ 1 Ft. of Head	2
Shut-Off (Ft.)	35
Includes	Pump/Controller, Reservoir, Suction, Vent and Drain Tubing

Customers Also Viewed

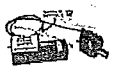

Condensate, Mini-Split
Brand: LITTLE GIANT
Grainger Item #: 3XY19
Price: $141.90
Qty Add to Order

Pump, Condensate
Brand: LITTLE GIANT
Grainger Item #: 3P730
Price: $104.95
Qty Add to Order

Pump, Condensate, 115 V
Brand: LITTLE GIANT
Grainger Item #: 2P351
Price: $85.35
Qty Add to Order

Condensate Pump, 1/150 HP, 120 Volt
Brand: LITTLE GIANT
Grainger Item #: 2GZG4
Price: $94.85
Qty Add to Order

Customers Also Purchased

1 of 5

Ear Plugs, Uncord, NRR 33, Org, PK 200
Brand: HOWARD LEIGHT BY HONEYWELL
Grainger Item #: 5FV14
Price: $40.90
Qty Add to Order

Glove, Drivers, Cowhide, L, Pr
Brand: CONDOR
Grainger Item #: 3ZL50
Price: $10.80
Qty Add to Order

Glove, Drivers, Cowhide, XL, Pr
Brand: CONDOR
Grainger Item #: 3ZL49
Price: $10.80
Qty Add to Order

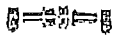

Hose Repair Kit
Brand: WESTWARD
Grainger Item #: 4KG68
Price: $9.86
Qty Add to Order

Glove, Drivers, Cowhide, M, Pr
Brand: CONDOR
Grainger Item #: 3ZL51
Price: $10.80
Qty Add to Order

Other Popular Terms for this Product

- Wastewater Pumps (407)
- Water System Pumps (279)
- Drain Pumps (176)
- Condensate Removal Pumps (46)
- Ice Machine Pumps (24)

View Catalog Page | View Printable Page

Return To Top

Tag: RF11.1, RF11.2, RF11.3 & RF11.4

Specification: 15860

Manufacture: Greenheck

Drawing reference: M204

Location: B2 Passenger Level

GREENHECK FANS

REP: ADE

PHONE: 732-553-0038

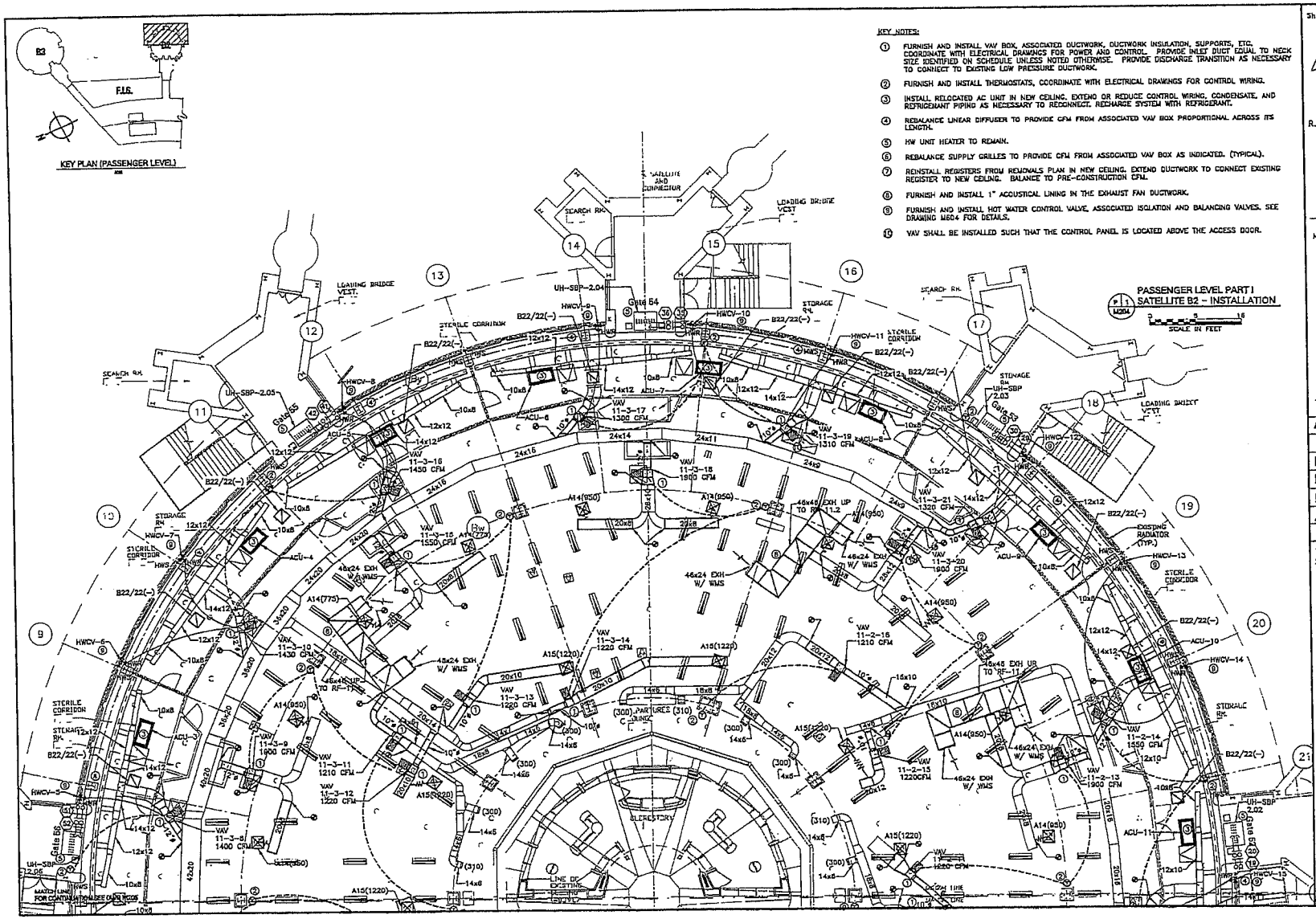

Sheet 28 of 183

THE PORT AUTHORITY OF NY&NJ

R.G. VANDERWEIL ENGINEERS, LLP

VAL LEVIN
N.J. Professional Engineer # 24GE04579600

No.	Date	Revision	Approved

ENGINEERING DEPARTMENT

NEWARK LIBERTY INTERNATIONAL AIRPORT

MECHANICAL HVAC

Title

TERMINAL B REHABILITATION OF SATELLITE B-2 MECHANICAL AND ELECTRICAL SYSTEMS

PASSENGER LEVEL PART PLAN I SATELLITE B2 INSTALLATION

J. DIMORNE	J. DIMORNE	S. CSONTOS
Designed by	Drawn by	Checked by

Date 05/12/2010

Contract Number EWR-154.081

Drawing Number M204

PID# 08353000

G27508

READ AND SAVE THESE INSTRUCTIONS

PN 460524

GREENHECK
Building Value in Air.

Model S-CUBE Belt Drive Emergency Smoke Control Centrifugal Roof Exhaust Fan

Installation, Operating and Maintenance Manual

Receiving Unit:

Upon receiving unit, check for any damage and report it immediately to the shipper. Also check to see that all accessory items are accounted for.

Move fan to desired location and fasten securely through mounting holes in base. Shims may be necessary depending upon roofing material thickness.

Access to Motor Compartment:

Access to the motor compartment is accomplished by removing the screws designated "R" in Fig. 1 . The cover can then be removed and placed on a flat surface in an area protected from strong winds.

Electrical Connection:

The motor's amperage and voltage rating must be checked for compatibility to the supply voltage prior to final electrical connection. Also, the motor itself cannot have Thermal Overload. For Emergency Smoke Removal S-CUBE applications, the electrical supply must enter the motor compartment through the breather tube. Disconnect must be mounted outside the fans motor compartment. ***Consult local code authorities for your specific requirements.*** Shown below is the UL Listed label that the fan will bear.

Listed Power Ventilator For Smoke Contol Systems 76Y9	-- IMPORTANT -- ELECTRICAL -- If fan motor is NOT thermally protected, remote overload protection must be installed having adequate rating as to voltage, frequency, horsepower, and full load current per phase. Where connected to a circuit protected by fuses, use time delay fuses. For supply connection, use wires rated for at least 90° C (194° F). INSTALLATION -- When connecting electrical power to this fan, do not restrict motor movement. Motor must have sufficient movement for possible future belt or wheel adjustment. 454975

Recommended Emergency Smoke Control Installation

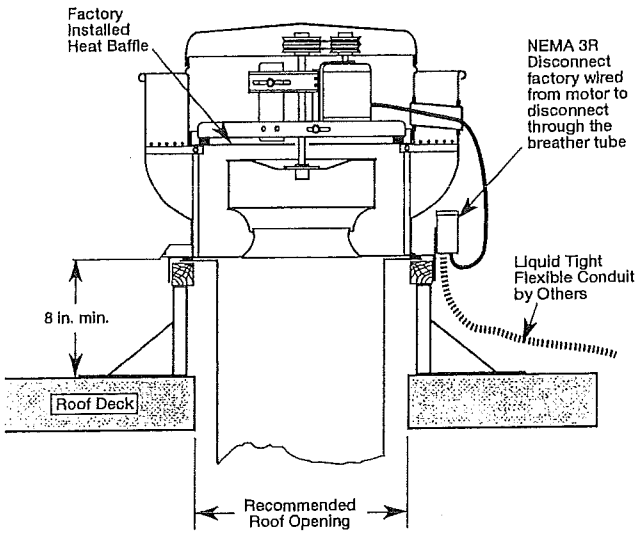

Use of any non-approved smoke control damper is NOT permitted.

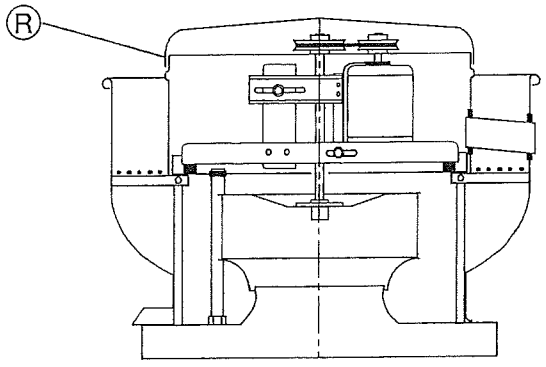

Fig. 1

For belt drive units in Emergency Smoke Removal installations, the electrical supply must be kept out of the airstream. They may also require an isolated power supply so that if power is cut to the building in the event of a fire, the fan will continue to operate. Check the local and national electrical codes for emergency smoke removal fans.

Pre-Starting Checks

Check all fasteners for tightness. The wheel should rotate freely and be aligned as shown in Fig. 2. Wheel position is preset and the unit is test run at the factory. Movement may occur during shipment, and realignment may be necessary. Centering can be accomplished by loosening the bolts holding the drive frame to the shock mounts and repositioning the drive frame. Wheel and let cone overlap can be adjusted by loosening the set screws in the wheel and moving the wheel to the desired position.

WHEEL OVERLAP DIMENSIONS

MODEL	G
141-161	1/4 in.
200-300	1/2 in.

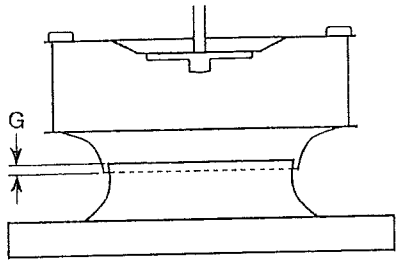

Fig. 2

WHEEL ROTATION

All S-CUBE fans have CW wheel rotation when viewed from top of fan.

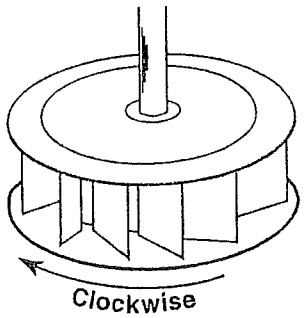

Fig. 3

Direction of wheel rotation is critical. Reversed rotation will result in poor air performance, motor overloading and possible burnout. Check wheel rotation (viewing from the shaft side) by momentarily energizing the unit. Rotation should be clockwise as shown in Fig. 3 and correspond to the rotation decal on the unit.

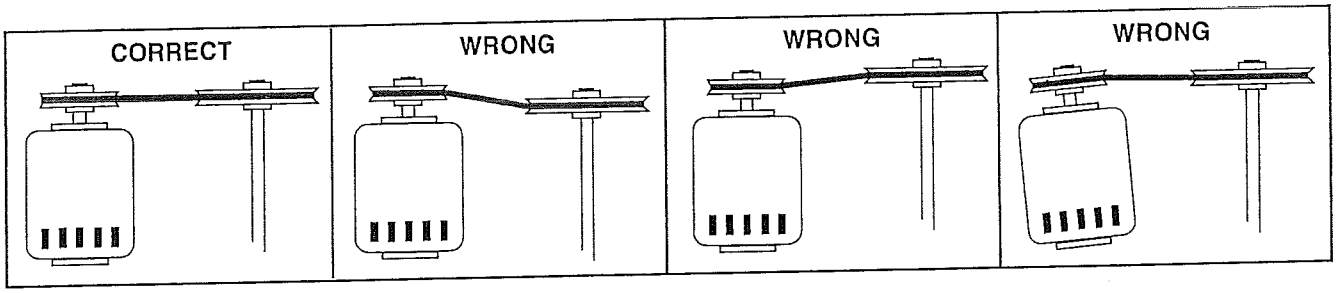

Fig. 4

adjustments are made, it is very important to check the pulleys for proper alignment. Misaligned pulleys lead to excessive elt wear, vibration, noise and power loss. (See Fig. 4)

For all S-CUBE units, belt tension can be adjusted by loosening four fasteners (marked "R") on the drive frame. The motor plate slides on the slotted adjusting arms and drive frame angles in the same manner (see Fig. 5). Belt tension should be adjusted to allow 1/64 inch of deflection per inch of belt span. For example, a 15 inch belt span should have 15/64 inch (or about 1/4 inch) of deflection with moderate thumb pressure at mid-point between pulleys. (See Fig. 6). Overtightening will cause excessive bearing wear and noise. Too little tension will cause slippage at startup and uneven wear.

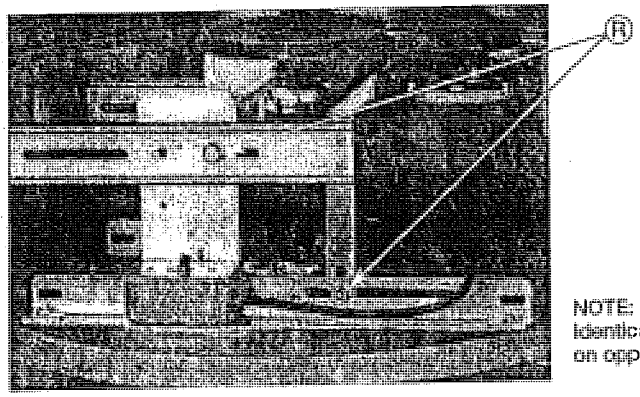

Fig. 5

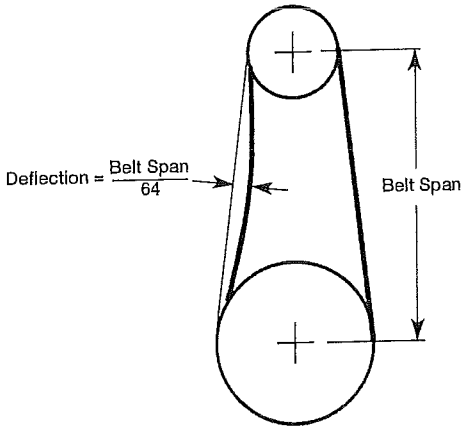

Fig. 6

adjustable motor pulley is factory set for the RPM specified. Speed can be increased by closing or decreased by opening adjustable motor sheave. Two groove variable pitch pulleys must be adjusted an equal number of tums open or closed. ıy increase in speed represents a substantial increase in the horsepower required by a unit. Motor amperage should always oe checked to avoid serious damage to the motor when speed is varied.

MAINTENANCE

Belts tend to stretch after a period of time. They should be checked periodically for wear and tightness. When replacing belts, use the same type as supplied with the unit. Matched belts should always be used on units with multi-groove pulleys. For belt replacement, loosen the tensioning device far enough to allow removal of the belt by hand. Do not force belts on or off. This may cause cords to break, leading to premature belt failure. Once installed, adjust belts as shown in "Pre-Starting Checks."

Bearings are the most critical moving part of the fan and should be inspected at periodic intervals. Locking collars and set screws, in addition to fasteners attaching the bearings to the bearing plate, must be checked for tightness. In a clean environment and temperatures above 32°F./below 200° F., fan shaft bearings with grease fittings should be lubricated semi-annually using a high quality lithium based grease. If unusual environmental conditions exist, temperatures below 32°F./above 200°F., moisture or contaminants, more frequent lubrication is required.

With the unit running, add grease very slowly with a manual grease gun until a slight bead of grease forms at the seal. Be careful not to unseat the seal by over lubricating or using excessive pressure.

Motor maintenance is generally limited to cleaning and lubrication (where applicable). Cleaning should be limited to exterior surfaces only. Removing dust buildup on motor housing ensures proper motor cooling. Greasing of motors is only intended when fittings are provided. Many fractional motors are permanently lubricated and should not be lubricated further. Motors supplied with grease fittings should be greased in accordance with manufacturers' recommendations. Where motor temperatures do not exceed 104°F (40°C), the grease should be replaced after 2000 hours of running time as a general rule.

Wheels require very little attention when moving clean air. Occasionally, oil and dust may accumulate causing imbalance. When this occurs, the wheel and housing should be cleaned to ensure smooth and safe operation.

The unit should be made non-functional when cleaning the wheel or housing (fuses removed, disconnect locked off, etc.).

All fasteners should be checked for tightness each time maintenance checks are performed prior to restarting unit.

A proper maintenance program will help these units deliver years of dependable service.

TROUBLESHOOTING

PROBLEM	CAUSE	CORRECTIVE ACTION
REDUCED AIRFLOW	System resistance too high	Check system: Proper operation of backdraft or control dampers, obstruction in ductwork, etc.
	Unit running backwards	Correct as shown in Fig. 3.
	Excessive dirt buildup on wheels	Clean wheel.
	Improper wheel alignment	Center wheel on inlets.
EXCESSIVE NOISE OR VIBRATION	Bad bearings	Replace.
	Belts too tight or too loose	Refer to Fig. 6 and adjust tension.
	Wheel improperly aligned and rubbing	Center wheel on inlets. See Fig. 2.
	Loose drive or motor pulleys	Align and tighten. See "Pre-Starting Checks."
	Foreign objects in wheel or housing	Remove objects, check for damage or unbalance.
	Unbalance of wheel caused by excessive dirt and grease buildup	Remove buildup.

NOTE: Before taking any corrective action, make certain unit is not capable of operation during repairs.

PARTS LIST

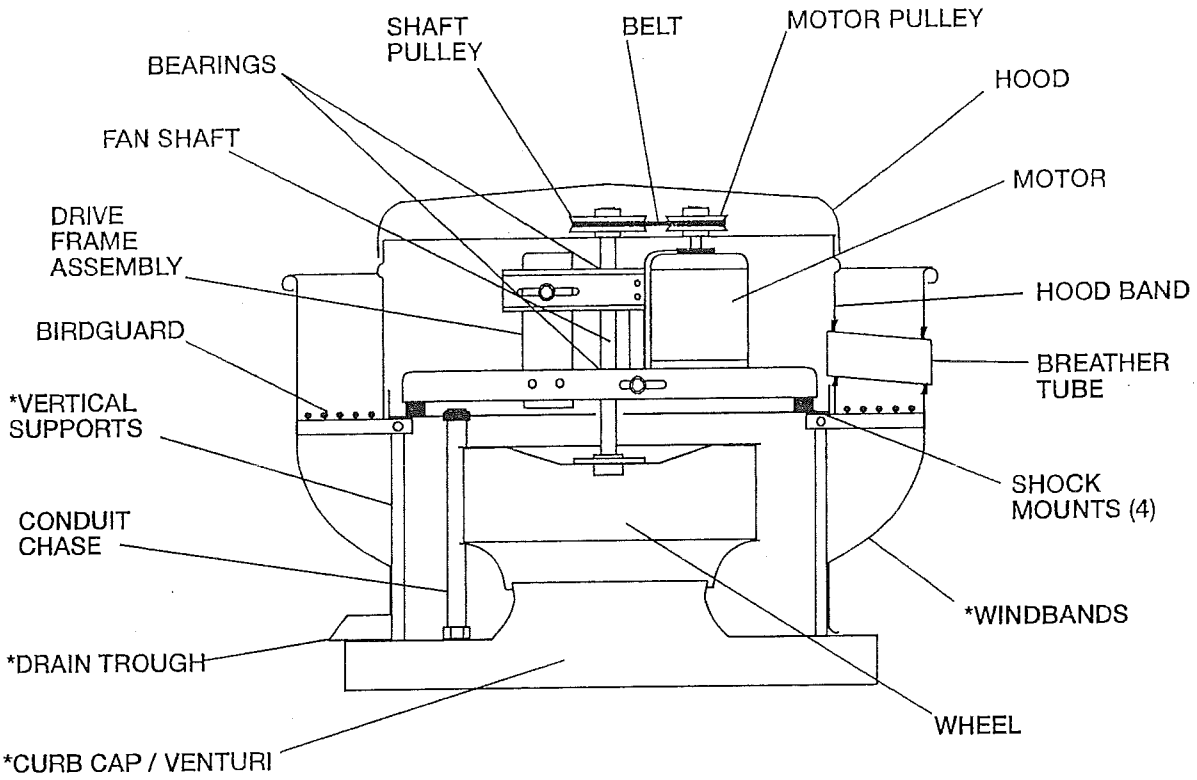

* For replacement, the windband, vertical supports, drain trough and curb cap/venturi come as one complete assembly.

NOTE: Each fan bears a manufacturer's nameplate with model number and serial number embossed. This information will assist the local Greenheck representative and the factory in providing service and replacement parts.

WARRANTY

Greenheck warrants this equipment to be free from defects in material and workmanship for a period of one year from the date of purchase.

Any units or parts which prove to be defective during the warranty period will be replaced at our option when returned to our factory, transportation paid.

The motor is warranted by the motor manufacturer for a period of one year. Should the motor prove defective during this period, it should be returned to the nearest authorized motor service station.

Greenheck will not be responsible for any installation or removal costs.

GREENHECK®

P.O. Box 410 • Schofield, WI 54476-0410 • greenheck.com

Copyright © 2001 Greenheck Fan Corp.

GREENHECK
Building Value in Air.

PN 471560

Upblast Centrifugal Roof Exhaust Fans

Installation, Operation and Maintenance Manual

Please read and save these instructions. Read carefully before attempting to assemble, install, operate or maintain the product described. Protect yourself and others by observing all safety information. Failure to comply with instructions could result in personal injury and/or property damage! Retain instructions for future reference.

Model CUE Direct Drive

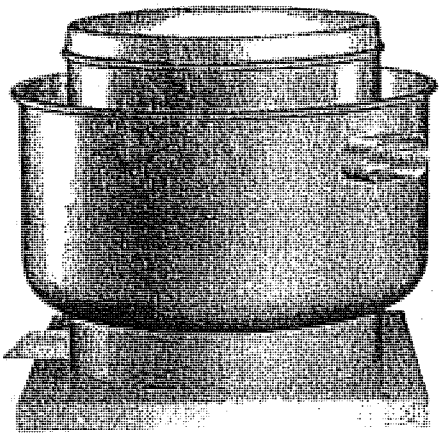

Model CUE is a direct drive upblast centrifugal exhaust fan. These fans are specifically designed for roof mounted application. Performance capabilities range up to 6,400 cfm *(10,874 m³/hr)* and up to 3 in. wg *(747 Pa)* of static pressure. The maximum continuous operating temperature for fan sizes 098-200 is 400°F *(204°C)* and for fan sizes 060-095 is 160°F *(71°C)*. CUEs are available in fourteen sizes with nominal wheel diameter ranging from 9 to 20 inches *(229 mm to 508 mm)* (060 - 200 unit sizes). Each fan shall bear a permanently affixed manufacture's engraved metal nameplate containing the model number and individual serial number.

Model CUBE Belt Drive

Model CUBE is a belt drive upblast centrifugal exhaust fan. These fans are specifically designed for roof mounted application. Performance capabilities range up to 30,000 cfm *(50,970 m³/hr)* and up to 1.5 in. wg *(374 Pa)* of static pressure. The maximum continuous operating temperature is 400°F *(204.4°C)*. CUBE is available in fourteen sizes with nominal wheel diameter ranging from 9 to 48 inches *(229 to 1219 mm)* (098 - 480 unit sizes). Each fan shall bear a permanently affixed manufacture's engraved metal nameplate containing the model number and individual serial number.

General Safety Information

Only qualified personnel should install this fan. Personnel should have a clear understanding of these instructions and should be aware of general safety precautions. Improper installation can result in electric shock, possible injury due to coming in contact with moving parts, as well as other potential hazards. Other considerations may be required if high winds or seismic activity are present. If more information is needed, contact a licensed professional engineer before moving forward.

DANGER
Always disconnect, lock and tag power source before installing or servicing. Failure to disconnect power source can result in fire, shock or serious injury.
CAUTION
When servicing the fan, motor may be hot enough to cause pain or injury. Allow motor to cool before servicing.
CAUTION
Precaution should be taken in explosive atmospheres.

1. Follow all local electrical and safety codes, as well as the National Electrical Code (NEC) and the National Fire Protection Agency (NFPA), where applicable. Follow the Canadian Electric Code (CEC) in Canada.
2. The rotation of the wheel is critical. It must be free to rotate without striking or rubbing any stationary objects.
3. Motor must be securely and adequately grounded.
4. Do not spin fan wheel faster than max cataloged fan RPM. Adjustments to fan speed significantly effects motor load. If the fan RPM is changed, the motor current should be checked to make sure it is not exceeding the motor nameplate amps.
5. Do not allow the power cable to kink or come in contact with oil, grease, hot surfaces or chemicals. Replace cord immediately if damaged.
6. Verify that the power source is compatible with the equipment.
7. Never open access doors to a duct while the fan is running.

Receiving

Upon receiving the product check to make sure all items are accounted for by referencing the bill of lading to insure all items were received. Inspect each crate for shipping damage before accepting delivery. Notify the carrier if any damage is noticed. The carrier will make notification on the delivery receipt acknowledging any damage to the product. All damage should be noted on all the copies of the bill of lading which is countersigned by the delivering carrier. A Carrier Inspection Report should be filled out by the carrier upon arrival and reported to the Traffic Department. If damaged upon arrival, file a claim with carrier. Any physical damage to the unit after acceptance is not the responsibility of Greenheck Fan Corporation.

Unpacking

Verify that all required parts and the correct quantity of each item have been received. If any items are missing, report shortages to your local representative to arrange for obtaining missing parts. Sometimes it is not possible that all items for the unit be shipped together due to availability of transportation and truck space. Confirmation of shipment(s) must be limited to only items on the bill of lading.

Handling

CUE Direct Drive

Lift unit on to the roof utilizing hooks under the horizontal supports. Evenly space the hooks using a minimum of four lifting straps. Use a spreader bar to ensure the straps do not come in contact with the unit (see figure 1).

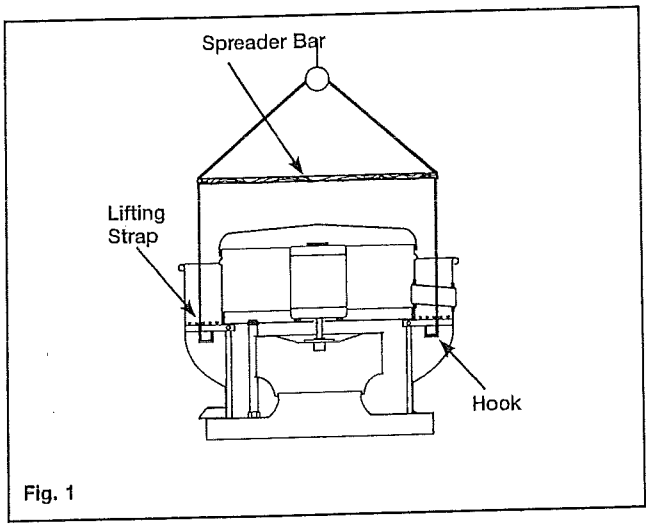

Fig. 1

CUBE Belt Drive

When lifting the unit on to the roof, use either the four lifting points on the drive frame or the two lifting points on the bearing plate if present (see figure 2 for lifting points). Access to the drive frame is accomplished by removing the screws pointed out in figure 3. The cover can then be removed and placed on a flat surface in an area protected from strong winds.

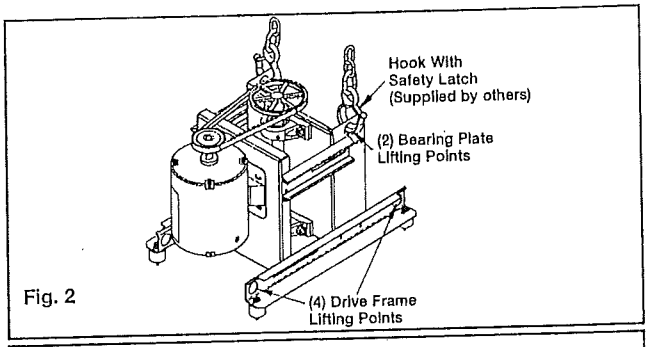

Fig. 2

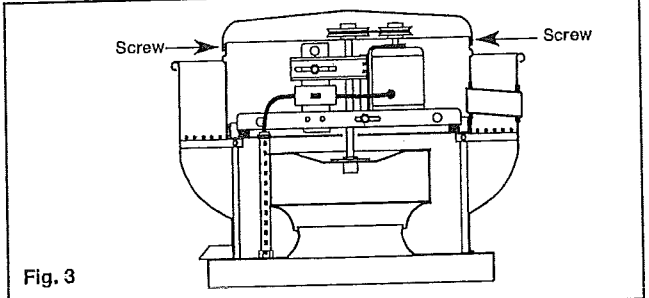

Fig. 3

CAUTION

Do not lift by the fan hood. Avoid lifting fans in a way that will bend or distort fan parts. Never pass slings or timbers through the venturi of fan. Fans with special coatings or paints must be protected in handling to prevent damage.

When CUE/CUBE unit is on the roof, move fan to desired location using lifting points and fasten securely through mounting holes in base. Shims may be necessary depending upon roofing material thickness.

The motor amperage and voltage ratings must be checked for compatibility to supply voltage prior to final electrical connection. For CUE/CUBE installations, the electrical supply should be routed through the conduit chase located between the curb cap and the bottom of the motor compartment. Wiring must conform to local and national codes.

Storage

Fans are protected against damage during shipment. If the unit cannot be installed and operated immediately, precautions need to be taken to prevent deterioration of the unit during storage. The user assumes responsibility of the fan and accessories while in storage. The manufacturer will not be responsible for damage during storage. These suggestions are provided solely as a convenience to the user.

Indoor

The ideal environment for the storage of fans and accessories is indoors, above grade, in a low humidity atmosphere which is sealed to prevent the entry of blowing dust, rain or snow. Temperatures should be evenly maintained between 30° to 110°F *(-1° to 43°C)* (wide temperature swings may cause condensation and "sweating" of metal parts). All accessories must be stored indoors in a clean, dry atmosphere.

Remove any accumulations of dirt, water, ice or snow and wipe dry before moving to indoor storage. To avoid "sweating" of metal parts allow cold parts to reach room temperature. To dry parts and packages use a portable electric heater to get rid of any moisture buildup. Leave coverings loose to permit air circulation and to allow for periodic inspection.

The unit should be stored at least 3½ in. *(89 mm)* off the floor on wooden blocks covered with moisture proof paper or polyethylene sheathing. Aisles between parts and along all walls should be provided to permit air circulation and space for inspection.

Outdoor

Fans designed for outdoor applications may be stored outdoors, if absolutely necessary. Roads or aisles for portable cranes and hauling equipment are needed.

The fan should be placed on a level surface to prevent water from leaking into the fan. The fan should be elevated on an adequate number of wooden blocks so that it is above water and snow levels and has enough blocking to prevent it from settling into soft ground. Locate parts far enough apart to permit air circulation, sunlight and space for periodic inspection. To minimize water accumulation, place all fan parts on blocking supports so that rain water will run off.

Do not cover parts with plastic film or tarps as these cause condensation of moisture from the air passing through heating and cooling cycles.

Fan wheels should be blocked to prevent spinning caused by strong winds.

Inspection and Maintenance During Storage

While in storage, inspect fans once per month. Keep a record of inspection and maintenance performed.

If moisture or dirt accumulations are found on parts, the source should be located and eliminated. At each inspection, rotate the wheel by hand ten to fifteen revolutions to distribute lubricant on motor. If paint deterioration begins, consideration should be given to touch-up or repainting. Fans with special coatings may require special techniques for touch-up or repair.

Machined parts coated with rust preventive should be restored to good condition promptly if signs of rust occur. Immediately remove the original rust preventive coating with petroleum solvent and clean with lint-free cloths. Polish any remaining rust from surface with crocus cloth or fine emery paper and oil. Do not destroy the continuity of the surfaces. Thoroughly wipe clean with Tectyl® 506 (Ashland Inc.) or the equivalent. For hard to reach internal surfaces or for occasional use, consider using Tectyl® 511M Rust Preventive, WD-40® or the equivalent.

Removing From Storage

As fans are removed from storage to be installed in their final location, they should be protected and maintained in a similar fashion until the fan equipment goes into operation.

Installation

WARNING

Installation, troubleshooting and parts replacement is to be performed only by qualified personnel. Consult and follow NFPA 96 recommendations. NFPA 96 instructions supercede this document.

WARNING

Disconnect power before installing or servicing.

Typical Roof Mounting Installation

1. On the roof surface, cut an appropriate sized hole and follow manufacturer's instructions on curb installation. Caulk and flash the curb to ensure a water tight seal.
2. If unit is equipped with a backdraft damper, it should be installed now.
3. Remove motor cover. Access to the motor compartment is accomplished by removing the screws as shown in figure 3.
4. For CUBE Belt Drive fans only. On the drive frame use the lifting lugs to lift and place the unit on top of roof curb. (Refer to figure 2 on page 2).
5. Secure fan to curb using a minimum of eight lug screws, metal screws or the suitable fasteners. Shims may be required depending upon curb installation and roofing material.
6. Verify power line wiring is de-energized before connecting fan motor to power source.
7. Connect power supply wiring to the motor as indicated on the motor nameplate or terminal box cover. Check the power source for compatiblity with the requirements of your equipment.
8. Check fan wheel for free rotation, re-center if necessary.
9. Check all fasteners for tightness.
10. Mount and wire safety disconnect switch under motor cover. Wire control switches at ground level, refer to figure 4.
12. Replace motor cover.
13. For NFPA - restaurant applications: the electrical supply must enter the motor compartment through the breather tube. For other non-flammable applications the electrical supply can be routed throught the conduit chase between the curb cap and the bottom of the motor compartment.

Typical Wiring Diagram

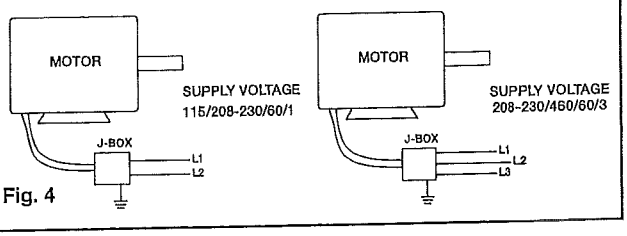

Fig. 4

CUE - Direct Drive

Model	Curb Cap	Damper	Roof Opening	*Approx. Weight
CUE 060, 065, 070, 075	17 (432)	8 (203)	10½ (267)	26 (12)
CUE 080, 085, 090	19 (483)	10 (254)	12½ (318)	33 (15)
CUE 095	19 (483)	10 (254)	12½ (318)	36 (16)
CUE 098, 101, 121, 131	19 (483)	12 (305)	14½ (368)	67 (30)
CUE 141, 161	22 (559)	16 (406)	18½ (470)	85 (39)
CUE 180-200	30 (762)	18 (457)	20½ (521)	142 (64)

CUBE - Belt Drive

Model	Curb Cap	Shaft Bearings	Damper	Roof Opening	*Approx. Weight
CUBE 098, 101, 101HP, 121, 131	19 (483)	½ (19)	12 (305)	14½ (368)	66 (30)
CUBE 141, 141HP, 161, 161HP, 161XP	22 (559)	½ (19)	16 (406)	18½ (470)	87 (39)
CUBE 180	30 (762)	¾ (19)	18 (457)	20½ (521)	126 (57)
CUBE 180HP	30 (762)	1 (25)	18 (457)	20½ (521)	126 (57)
CUBE 200	30 (762)	¾ (19)	18 (457)	20½ (521)	142 (64)
CUBE 200HP	30 (762)	1 (25)	18 (457)	20½ (521)	142 (64)
CUBE 220, 220HP	34 (864)	1 (25)	24 (610)	26½ (673)	174 (79)
CUBE 240, 240HP, 240XP	34 (864)	1 (25)	24 (610)	26½ (673)	175 (79)
CUBE 300, 300HP, 300XP	40 (1016)	1 (25)	30 (762)	32½ (826)	313 (142)
CUBE 360, 360HP, 360XP	46 (1168)	1¼ (32)	36 (914)	38½ (978)	440 (200)
CUBE 420	52 (1321)	1¼ (32)	42 (1067)	44½ (1130)	578 (262)
CUBE 480	58 (1473)	1½ (38)	48 (1219)	50½ (1283)	675 (306)

- *All dimensions are in inches (millimeters). *Approximate weight shown in lbs. (kg.) is the largest cataloged Open Drip Proof motor.*
- *The roof curb should be 1½ in. (38 mm) less than the curb cap to allow for roofing and flashing.*

General Ventilation Installation

Fig. 5 - Typical Roof Mounting Installation

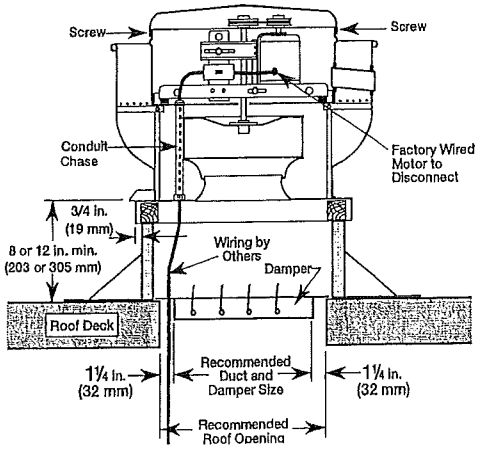

Commercial Kitchen Installation

Fig. 6 - Typical Roof Mounting Installation

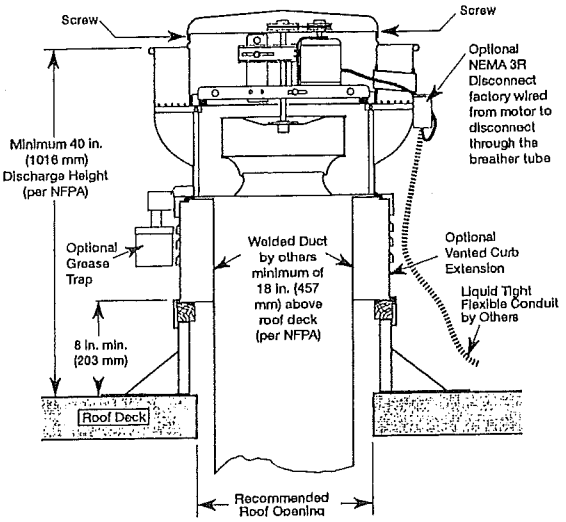

WARNING

In a kitchen exhaust application do not use a speed control or backdraft damper.

Note: In kitchen fan applications, exhaust upblast fans must have external wiring.

Kitchen Roof Mounting Installation

Note: UL/cUL 762 Installation are for Restaurant Applications

1. The size of the duct must be equal or larger than inlet opening.
2. Secure the fan to curb at all four corners using a minimum eight anchor bolts, lag screws or other suitable fasteners.
3. Use optional grease trap, hinge kit and external junction box.
4. Area codes may require a continuous weld between duct and inlet.
5. To comply with NFPA 96 the fan discharge has to be a minimum 40 in. (*1016 mm*) above the roof surface and a minimum of 10 ft (*3048 mm*) from any building air intake and be a minimum exhaust velocity in the duct should be 500 ft/min.
6. Ductwork to an upblast discharge exhaust fan is constructed of carbon steel not less than 16 MSG (*1.6 mm*) and extend a minimum of 18 in. (*457 mm*) above the roof surface.
7. Insure that a minimum of 500 ft/min of air velocity through the fan is maintained per MFPA 96, clause 8.2.1.1, 2008 edition and UL 762, Issue #5, December 19, 2003, clause 6.2.

Description

A Grease Trap is an aluminum trap designed to collect grease residue to avoid drainage onto roof surface. It contains a built-in water separating baffle.

Instructions

1. Apply cover to grease trap. Install clip nuts to trap over holes provided. Attach cover with two no. 10 - 24 x ½ fasteners.
2. Position the container under the grease drain so the drain spout enters the cover approximately 1½ to 2 in. *(38 -51 mm)*.
3. Locate and mark the container mounting holes on the extended base or roof curb.
4. Drill 3/16 in. (5 mm) diameter holes in marked loations.
5. Apply container with no. 10 - 24 x ¾ fasteners. See Detail "A" in figure 6. If extended base is vented type, allow space between screw head and container for vent projections.
6. For most climates, fill container with water (at installation and after each cleaning) until it flows out the drain hole. The unit is now ready for use.

Grease Trap Maintenance

Regular inspection of Grease Trap is recommended. Depending on the amount of grease discharged through the fan, the Grease Trap should be changed accordingly to ensure proper operation.

Grease Trap Installation

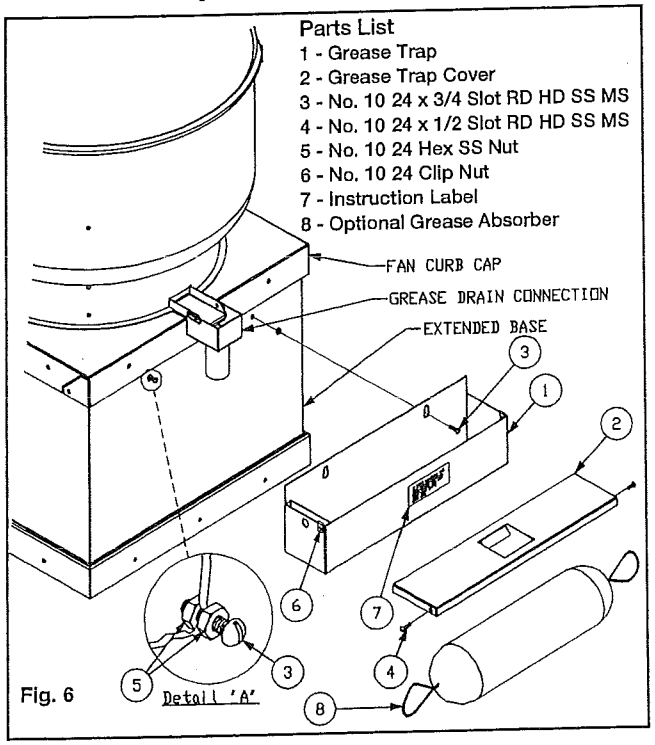

Fig. 6

Pre-Starting Checks

1. Check all fasteners and set screws for tightness. The wheel should rotate freely and be aligned as shown in figure 7.

Wheel Overlap and Gap Dimensions

Model	G - Overlap in (mm)	H - Gap in (mm)
CUE 060-095	–	3/32 (2)
CUE 098-161	¼ (6)	–
CUE 180-200	½ (13)	–
CUBE 098	–	3/32 (2)
CUBE 101-161	¼ (6)	–
CUBE 180-300	½ (13)	–
CUBE 360-480	¾ (19)	

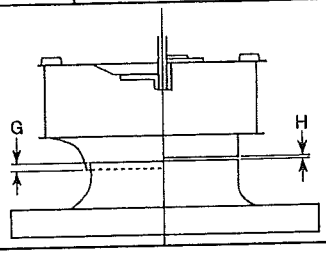

Fig. 7

2. Wheel position is preset and the unit is test run at the factory. Movement may occur during shipment and realignment may be necessary.
3. Only CUE unit - Centering height alignment can be accomplished by loosening the set screws in the wheel and moving the wheel to the desired position.
4. Only CUBE unit - Centering can be accomplished by loosening the bolts holding the drive frame to the shock mounts and repositioning the drive frame.
5. Only CUBE unit - Wheel and inlet cone overlap can be adjusted by loosening the set screws in the wheel and moving the wheel to the desired position.
6. Only CUBE unit - Fan RPM should be checked and verified with a tachometer.
7. Check wheel rotation (viewing from the shaft side) by momentarily energizing the unit. Rotation should correspond to the rotation decal on the unit, see figure 8. If wheel rotation is incorrect reverse two of the wiring leads or check motor wiring for single phase.

Wheel Rotation

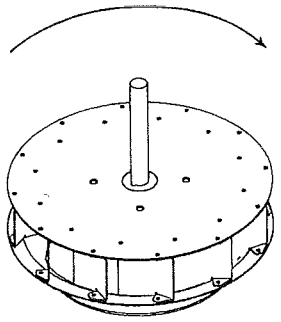

Clockwise
Airflow
All CUE Models
All CUBE Models

Fig. 8

WARNING

Correct direction of wheel rotation is critical. Reversed rotation will result in poor air performance, motor overloading and possible burnout.

Model CUBE

Pre-Starting Belt Tension Checks

8. Always loosen tension enough to install belts without stretching, see figure 9.

Belts

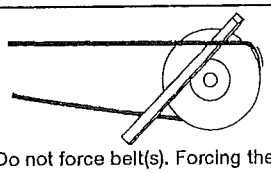

Do not force belt(s). Forcing the belt(s) will break the cords and cause belt failure

Fig. 9

9. For units with two groove pulleys, adjust so the tension is equal in both belts.
10. If adjustments are made, it is very important to check the pulleys for proper alignment. Misaligned pulleys lead to excessive belt wear vibration, noise and power loss, see figure 10.

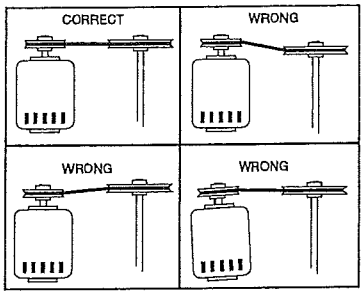

Fig. 10

WARNING

The fan has been checked for mechanical noises at the factory prior to shipment. If mechanical noise should develop, suggested corrective actions are offered in the Troubleshooting section.

IMPORTANT

Over tightening will cause excessive bearing wear and noise. Too little tension will cause slippage at startup and uneven wear.

11. Belt tension can be adjusted by loosening four fasteners on the drive frame, see figure 11. The motor plate slides on the slotted adjusting arms and drive frame angles in the same manner.

Fasteners

*(4) *Fasteners*

**Identical fasteners on opposing side must also be loosened.*

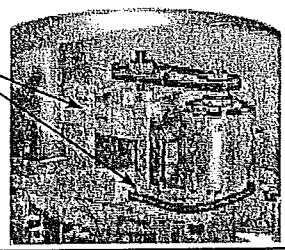

Fig. 11

12a. Sizes 071-161: Belts should be tensioned just enough to prevent slippage at full load.

Note: Belts should have a slight bow on the slack side while running at full load (see figure 12a).

12b. Sizes 180-540: Belt tension should be adjusted to allow 1/64 in. *(0.397 mm)* of deflection per inch of belt span. For example, a 15 in. *(381 mm)* belt span should have 15/64 in. *(0.234 mm)* (or about 1/4 in. *(6 mm)*) of deflection with moderate thumb pressure at mid-point between pulleys (see figure 12b).

Deflection

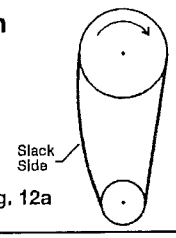

Fig. 12a

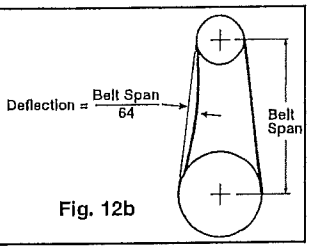

Fig. 12b

13. The adjustable motor pulley is factory set for the RPM specified. Speed can be increased by closing or decreased by opening the adjustable motor pulley.
14. Any increase in speed represents a substantial increase in the horsepower required by the unit.
15. Motor amperage should always be checked to avoid serious damage to the motor when speed is varied.

Operation: CUE / CUBE

1. Before starting up or operating fan, check all fasteners for tightness. In particular, check the setscrews in wheel hub (and pulleys, if applicable).
2. While in the OFF position or before connecting the fan to power, turn the fan wheel by hand to be sure it is not striking the venturi or any obstacle.
3. Start the fan and shut it off immediately to check rotation of the wheel with directional arrow in the motor compartment, see figure 8.
4. When the fan is started, observe the operation and check for any unusual noises.
5. With the system in full operation and all ductwork attached, measure current input to the motor and compare with the nameplate rating to determine if the motor is operating under safe load conditions.
6. Keep inlets and approaches to fan clean and free from obstruction.

IMPORTANT

Adjust (tighten) belt tension after the first 24-48 hours of operation.

Inspection: CUE/CUBE

Inspection of the fan should be conducted at the first 30 minute and 24 hour intervals of satisfactory operation.

30 Minute Interval

Inspect bolts, setscrews and motor mounting bolts. Adjust and tighten as necessary.

24 Hour Interval

Check all internal components. On CUBE unit only, inspect belt alignment and tension. Adjust and tighten as necessary.

Maintenance: CUE / CUBE

Installation and maintenance are to be performed only by qualified personnel who are familiar with local codes and regulations and who are experienced with this type of equipment.

Motor maintenance is generally limited to cleaning and lubrication (where applicable). Cleaning should be limited to exterior surfaces only. Removing dust buildup on motor housing ensures proper motor cooling.

Greasing of motors is only intended when fittings are provided. Many fractional horsepower motors are permanently lubricated and should not be lubricated after installation. Motors supplied with grease fittings should be greased in accordance with manufacturers' recommendations. Where motor temperatures do not exceed 104°F *(40°C)*, the grease should be replaced after 2,000 hours of running time as a general rule.

Wheels require very little attention when moving clean air. Occasionally, oil and dust may accumulate causing imbalance. When this occurs the wheel and housing should be cleaned to ensure smooth and safe operation.

All fasteners should be checked for tightness each time maintenance checks are performed prior to restarting unit.

A proper maintenance program will help these units deliver years of dependable service.

WARNING

Always disconnect, lock and tag power source before servicing. Failure to disconnect power source can result in fire, shock or serious injury.

CAUTION

Uneven cleaning of the wheel will produce an out of balance condition that will cause vibration in the fan.

WARNING

This unit should be made non-functional when cleaning the wheel or housing (fuses removed, disconnect locked off).

Belt/Bearing Maintenance CUBE Unit

1. Belts tend to stretch after a period of time. They should be checked periodically for wear and tightness. When replacing belts, use the same type as supplied with the unit.
2. Matched belts should always be used on units with multi-groove pulleys.
3. For belt replacement, loosen the tensioning device enough to allow removal of the belt by hand.
4. Once installed, adjust belts as shown in "Pre-Starting Checks."
5. Shaft bearings can be classified in two groups: relubricating and non-relubricating. All non-relubricating bearings on standard Model CUBE fans are factory lubricated and require no further lubrication under normal use (between -20° to 180°F *(-29° to 82°C)* in a relatively clean environment).
6. On CUBE belt driven fans, the standard cast pillow block bearings are factory lubricated and are provided with external grease fittings. Annual lubrication is recommended, or more frequently if needed, see Table 2. Do not over-grease. Use only one or two shots of lubricant with a hand gun. Maximum hand gun rating is 40 psi. Rotate bearings during lubrication where good safety practice permits. Caution should be employed to prevent over packing or contamination.
7. Grease fittings should be wiped clean. The unit should be in operation while lubricating. Extreme care should be used around moving parts.
8. Grease should be pumped in very slowly until a slight bead forms around the seal. A high grade lithium base grease should be used.
9. When installing restaurant exhaust applications follow NFPA 70 for cleaning fans.
10. Grease containers must be emptied at regular intervals to prevent overflow.
11. To ensure tightness, check pulley setscrews. Proper keys must be in keyways.
12. Fan RPM should not be readjusted. Only use pulleys of identical size and type when replacing pulleys.
13. During the first few months of operation check bearing set screws periodically to ensure tightness.
14. If unit is to be left idle for an extended period, remove belts and store in a cool, dry place to avoid premature belt failure.

Recommended Relubrication Frequency in Months

NOTE: If unusual environment conditions exist (extreme temperature, moisture or contaminants) more frequent lubrication is required.

A good quality lithium base grease, conforming to NLGI Grade 2 consistency, such as those listed here may be used.

Table 2: Suggested Fan Bearing Greasing Intervals

Interval (months)	Type of Service
1 to 3	Heavy duty in dirty, dusty locations; high ambient temperatures; moisture laden atmosphere; vibration.
3 to 6	12 to 24 hours per day, heavy duty, or if moisture is present
6 to 12	8 to 16 hours per day in clean, relatively dry atmosphere
12 to 18	Infrequent operation or light duty in clean atmosphere

Table 3: Grease Manufacturers

Manufacturer	Grease (NLGI #2)
U.S. Electric Motors	Grease No. 83343
Chevron U.S.A. Inc	Chevron SRI Grease #2
Mobil Oil Corporation	Mobilith
	Mobil 532
Texaco, Inc.	Premium BRB #2
	Texaco Multifak #2
Amoco Oil Co.	Rykon Premium #2
Exxon	Unirex N2
Shell	B Shell Alvania #2

Troubleshooting

WARNING: Before taking any corrective action, make certain unit is not capable of operation during repairs.

PROBLEM	CAUSE	CORRECTIVE ACTION
Excessive noise or vibration	Wheel rubbing inlet	Adjust wheel and/or inlet cone. Tighten wheel hub or bearing collars on shaft.
	V-belt drive	Tighten pulleys on motor/fan shaft. Adjust belt tension. Align pulleys properly, see page 6/figure 9-10. Replace worn belts or pulleys.
	Bearings	Replace defective bearing(s). Lubricate bearings. Tighten collars and fasteners.
	Wheel unbalance	Clean all dirt off wheel. Check wheel balance, rebalance in place if necessary.
	Bad bearings	Replace.
	Belts too tight or too loose	Adjust tension, see figure 12a-b.
	Wheel improperly aligned and rubbing	Center wheel on inlet, see figure 7.
	Loose drive or motor pulleys	Align and tighten. See "Pre-Starting Checks", see page 5-6.
	Foreign objects in wheel or housing	Remove objects, check for damage or unbalance.
	Fan base not securely anchored	Secure properly.
	Motor hood loose and rattling	Tighten acorn nuts securing motor hood.
	Defective or loose motor bearings	Replace motor with same frame size, RPM-HP
High horsepower	Fan	Check rotation of wheel, see figure 8. Reduce fan speed.
	Duct system	Resize ductwork. Check proper operation of face and bypass dampers. Check filters and access doors.
Fan does not operate	Electrical supply	Check fuses/circuit breakers. Check for switches off. Check for correct supply voltage.
	Drive	Check for broken belts. Tighten loose pulleys.
	Motor	Assure motor is correct horsepower and not tripping overload protector.
Motor overloads or overheats	Lubrication	Check for excessive or insufficient grease in the bearing.
	Mechanical	Replace damaged bearing. Relieve excessive belt tension. Align bearings. Check for bent shaft.
	Belt slippage	Adjust tension or replace bad belts, see page 5-6.
	Over/Under line voltage	Contact power company.
	Incorrect wheel rotation	Check motor wiring, see figure 4.
	Wheel RPM too high	Check drives or slow down fan by opening variable pitch pulley on motor shaft.
	Undersized motor	Check motor ratings with catalog speed and air capacity chart.
	Motor wired incorrectly	Check motor wiring to wiring diagram located on fan motor.
Reduced airflow	System resistance too high	Check system: Proper operation of backdraft or control dampers, obstruction in ductwork, clean dirty filters.
	Unit running backwards	Correct as shown in figure 8.
	Excessive dirt buildup on wheels	Clean wheel.
	Improper wheel alignment	Center wheel on inlets, see Pre-Starting checks and figure 7.
	Dampers closed	Inspect and repair.
	Blocked duct/clogged filter	Clean or replace.
	Belt slippage	Replace and adjust tension.
	Speed to slow	Check for correct drives.

Fan Inlet Connections

In order to assure proper fan performance, caution must be exercised in fan placement and connection to the ventilation system. Obstructions, transitions, poorly designed elbows, improperly selected dampers, etc, can cause reduced performance, excessive noise and increased mechanical stress. For performance to be as published, the system must provide uniform and stable airflow into the fan.

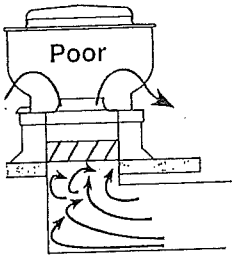

Dampers must open fully. Use motorized dampers in low airflow applications to reduce losses.

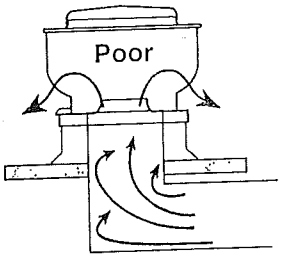

Avoid sharp turns or entrance conditions which cause uneven flow. Use turning vanes in elbows to reduce adverse effects.

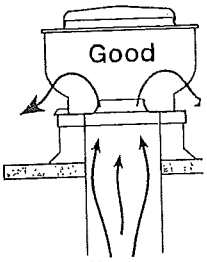

Provide uniform airflow at fan inlet to assure optimum performance.

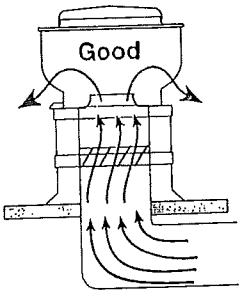

Provide uniform airflow at fan inlet and through the damper to assure optimum performance. The curb cap should be three wheel diameters from the radius. Use turning vanes in duct when possible.

Maintenance Documentation

Job Information

Job Name: _____
Address: _____
City: _____
State: _____ Zip: _____
Phone: _____
Contact Person: _____

Service Organization: _____
Address: _____
City: _____
State: _____ Zip: _____
Phone: _____
Work Done By: _____

Nameplate Information

Model: _____
Volts: _____ Hertz: _____ Phase: _____
Amps: _____ Mark: _____
Supply hp: _____ Exhaust hp: _____
Serial Number: _____
Model Voltage: _____
Motor Amperage: _____
Fan RPM: _____

Field Start-Up Documentation

Actual Voltage: _____ Hertz: _____ Phase: _____
Actual Amperage: _____
Blower Rotation: _____
Air Volume: Design cfm: _____
Actual cfm: _____
Level of fan (L or H): _____
Fan RPM Range (min.) _____ (max.) _____

Maintenance Log

Date	Time	Notes

Parts List

OTE

:ach fan bears a manufacturer's nameplate with model number and serial number embossed. This information will assist the local Greenheck representative and the factory in providing service and replacement parts. Before taking any corrective action, make certain unit is not capable of operation during repairs.

CAUTION

A fan manufactured with an explosion resistant motor does not certify the entire unit to be explosion proof.

CUE Direct Drive Centrifugal Roof Exhaust Fan

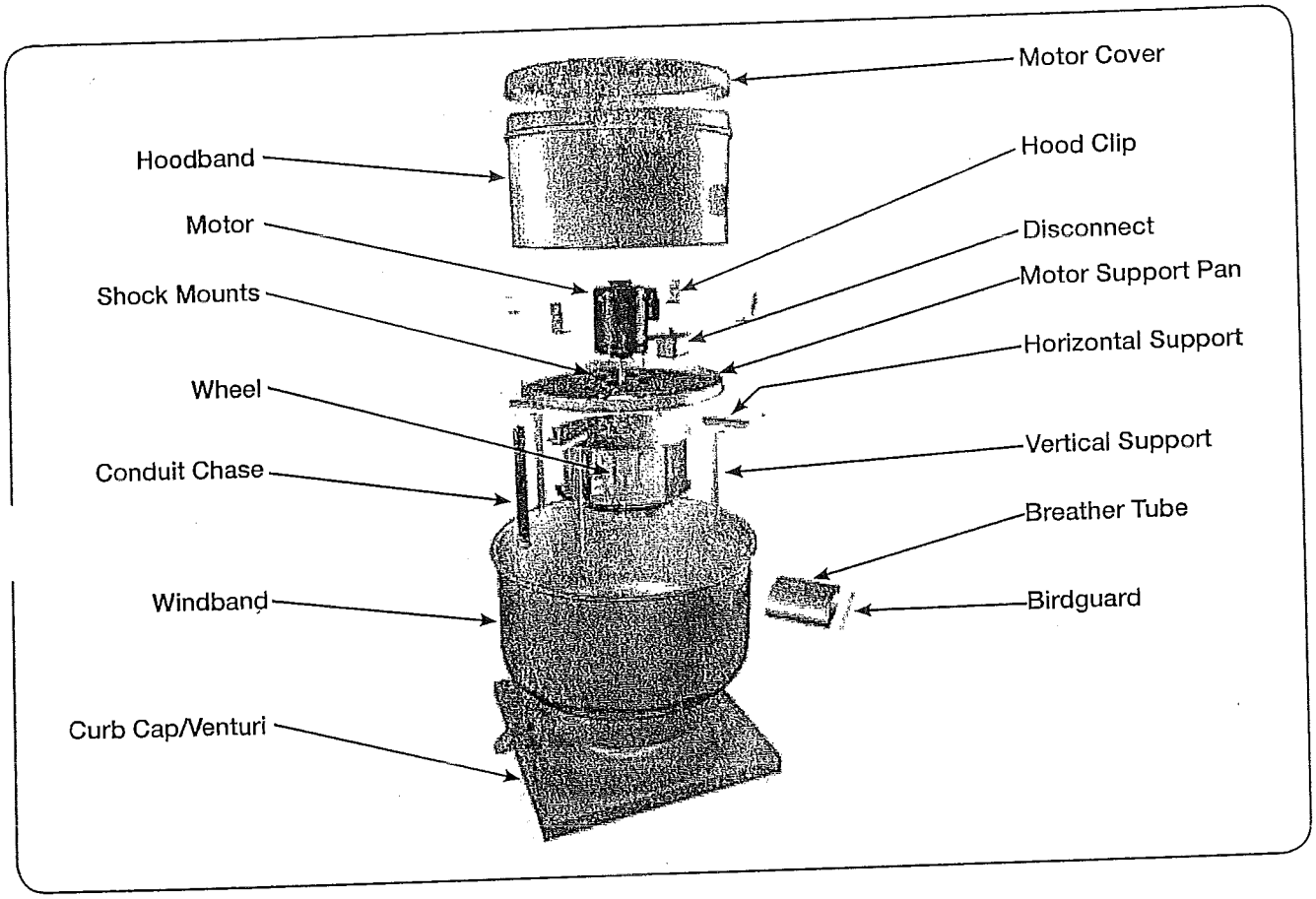

CUBE Belt Drive Centrifugal Roof Exhaust Fan

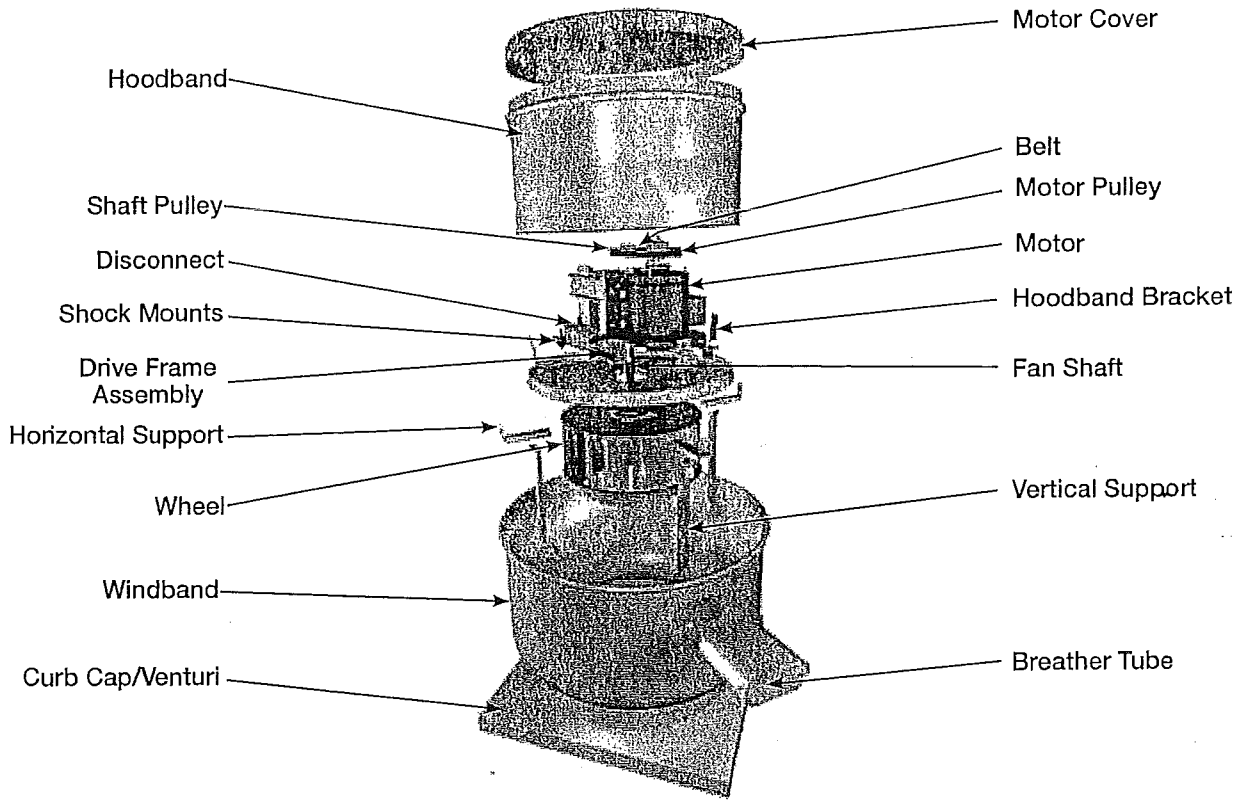

* For replacement, the windband, vertical supports, drain trough and curb cap/venturi come as one complete assembly.

Roof Curb Installation

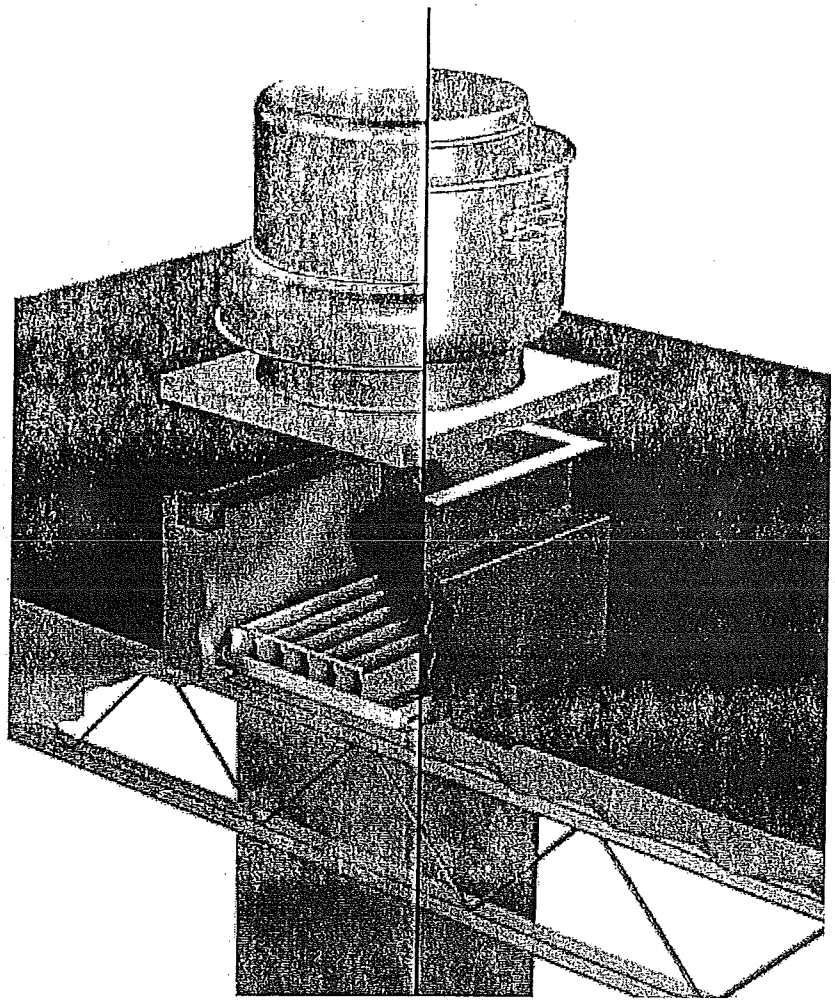

Warranty

Greenheck warrants this equipment to be free from defects in material and workmanship for a period of one year from the shipment date. Any units or parts which prove defective during the warranty period will be replaced at our option when returned to our factory, transportation prepaid. Motors are warranted by the motor manufacturer for a period of one year. Should motors furnished by Greenheck prove defective during this period, they should be returned to the nearest authorized motor service station. Greenheck will not be responsible for any removal or installation costs.

As a result of our commitment to continuous improvement, Greenheck reserves the right to change specifications without notice.

Greenheck Catalog CUE/CUBE provides additional information describing the equipment, fan performance, available accessories, and specification data.

AMCA Publication 410-96, Safety Practices for Users and Installers of Industrial and Commercial Fans, provides additional safety information. This publication can be obtained from AMCA International, Inc. at: www.amca.org.

GREENHECK
Building Value in Air.

Phone: (715) 359-6171 • Fax: (715) 355-2399 • E-mail: gfcinfo@greenheck.com • Website: www.greenheck.com

Copyright 2010 © Greenheck Fan Corp

Tag: HAC-1.1, HAC-1.2, HAC-1.3 & HAC-1.4

Specification: 15875

Manufacture: Mars Air Curtains

Drawing reference: M201 & M202

Location: B2 Ramp Level

MARS AIR CURTAINS

REP: TECHINCAL AIR SYSTEMS

PHONE: 973-285-0333

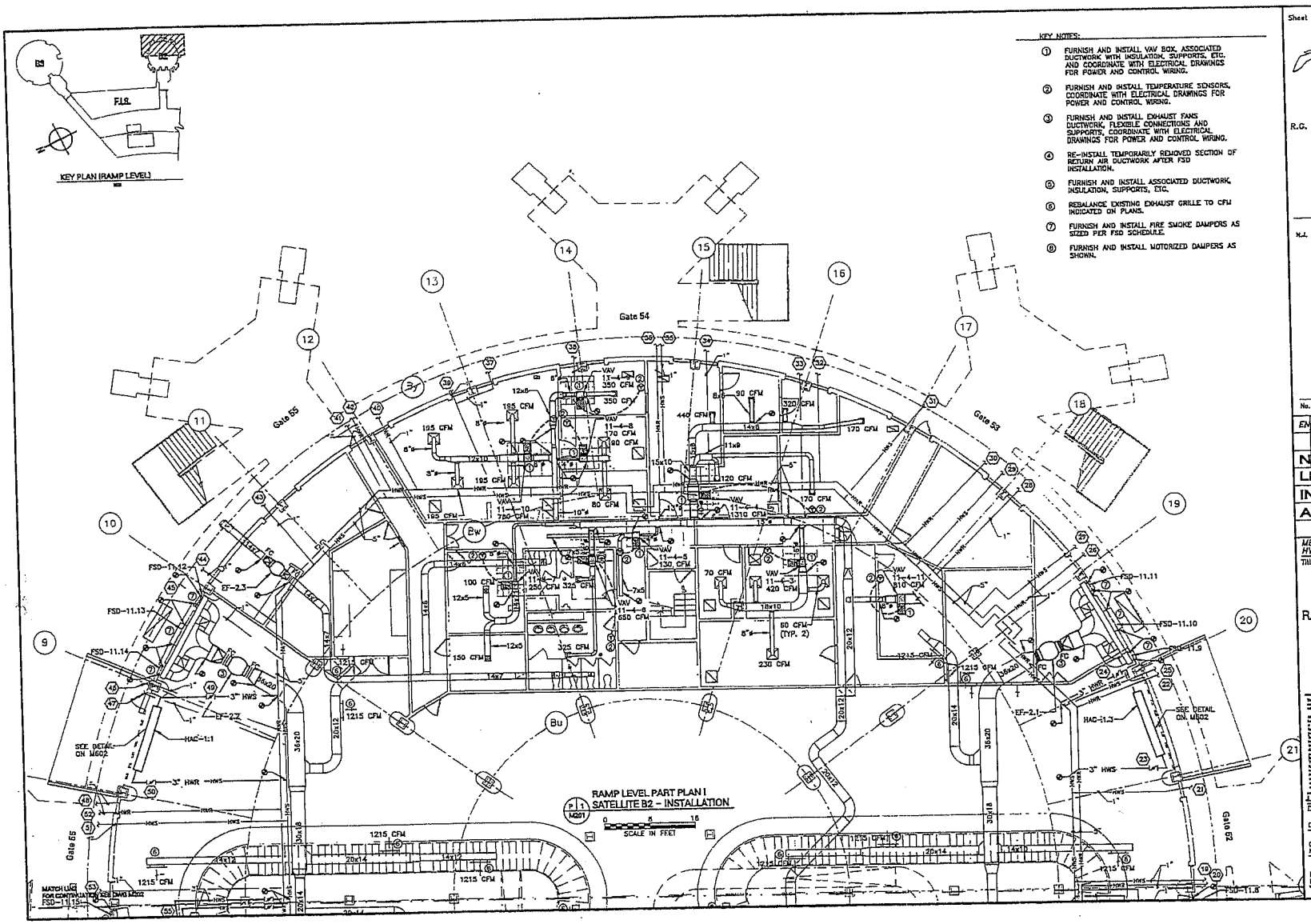

Sheet 23 of 183

THE PORT AUTHORITY OF NY & NJ

R.G. VANDERWEIL ENGINEERS, LLP

VAL LEVIN
N.J. Professional Engineer # 24GE04679600

No.	Date	Revision	Approved

ENGINEERING DEPARTMENT

NEWARK LIBERTY INTERNATIONAL AIRPORT

MECHANICAL HVAC

Title

TERMINAL B
REHABILITATION OF SATELLITE B-2
MECHANICAL AND ELECTRICAL SYSTEMS

RAMP LEVEL PART PLAN I
SATELLITE B2
INSTALLATION

J. DUMORNE	J. DUMORNE	S. COSMTOS
Designed by	Drawn by	Checked by

Date 05/12/2010

Contract Number EWR-154.081

Drawing Number M201

PID# 0353000

G27508

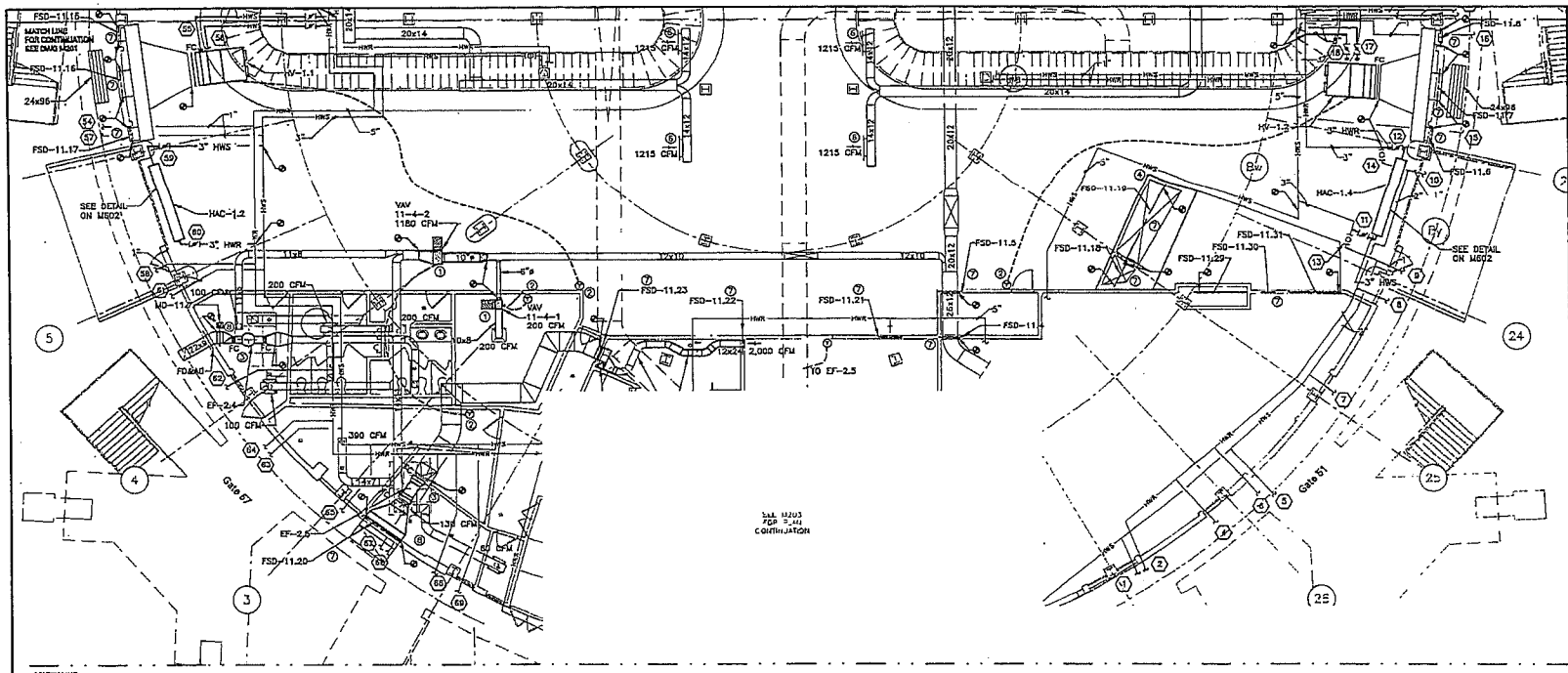

MATCH LINE FOR CONTINUATION SEE DWG M203

RAMP LEVEL PART PLAN II
SATELLITE B2 – INSTALLATION
P1.1 M202
0 8 16
SCALE IN FEET

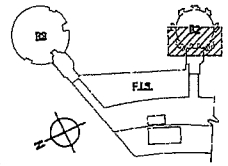

KEY PLAN (RAMP LEVEL)
NTS

KEY NOTES:

1. FURNISH AND INSTALL VAV BOX, ASSOCIATED DUCTWORK WITH INSULATION, SUPPORTS, ETC. AND COORDINATE WITH ELECTRICAL DRAWINGS FOR POWER AND CONTROL WIRING.
2. FURNISH AND INSTALL TEMPERATURE SENSORS. COORDINATE WITH ELECTRICAL DRAWINGS FOR POWER AND CONTROL WIRING.
3. FURNISH AND INSTALL EXHAUST FANS DUCTWORK, FLEXIBLE CONNECTIONS AND SUPPORTS, COORDINATE WITH ELECTRICAL DRAWINGS FOR POWER AND CONTROL WIRING.
4. RE-INSTALL TEMPORARILY REMOVED SECTION OF RETURN AIR DUCTWORK AFTER FSD INSTALLATION.
5. FURNISH AND INSTALL ASSOCIATED DUCTWORK, INSULATION, SUPPORTS, ETC.
6. REBALANCE EXISTING EXHAUST GRILLE TO CFM INDICATED ON PLANS.
7. FURNISH AND INSTALL FIRE SMOKE DAMPERS AS SIZED PER FSD SCHEDULE.
8. FURNISH AND INSTALL MOTORIZED DAMPERS AS SHOWN.

Sheet 24 of 183

THE PORT AUTHORITY OF NY & NJ

R.G. VANDERWEIL ENGINEERS, LLP

VAL LEVIN
N.J. Professional Engineer # 24GE04679800

No.	Date	Revision	Approved

ENGINEERING DEPARTMENT

NEWARK LIBERTY INTERNATIONAL AIRPORT

MECHANICAL
HVAC
Title

TERMINAL B
REHABILITATION OF SATELLITE B-2
MECHANICAL AND ELECTRICAL SYSTEMS

RAMP LEVEL PART PLAN II SATELLITE B2 INSTALLATION

This drawing subject to amendments in accordance with Specifications, Notes, Addenda and other Drawings and is supplemental to them governing and shall not be used without them. In case of conflict between Drawings, Specifications and Addenda, the latter shall govern. Before ordering any material or doing any work, the Contractor shall verify all measurements at the site and shall be responsible for the correctness thereof. No claim by the Contractor for additional compensation in connection with the execution of the work will be allowed on account of any discrepancies between actual measurements and the dimensions indicated on this drawing. Figures, in all cases, shall govern. Do not scale drawings. Any error or discrepancy shall be reported to the Engineer before proceeding with the work in question. Drawings are the property of the Engineer. Reproduction or publication thereof is expressly limited to such use as may be authorized in writing by the Engineer. Drawings are not to be used by any party on other projects or extensions to this project except by agreement in writing and appropriate compensation to the Engineer. It is a violation of law for any person to erase or otherwise alter this record drawing unless acting under the direction of a licensed professional engineer or licensed architect, in which case the altered record drawing must bear the seal of the person altering the record drawing and a notation stating the person altered the record drawing and the date of such alteration, and a specific description of the alteration.

J. DUMORNE	J. DUMORNE	S. CSOMTOS
Designed by	Drawn by	Checked by

Date 05/12/2010

Contract Number EWR-154.081

Drawing Number M202

PID# 08353000

G27508

INSTALLATION INSTRUCTIONS FOR STEAM/HOT WATER HEATED STANDARD, HIGH VELOCITY AND EXTRA POWER MODELS

READ INSTRUCTIONS BEFORE REMOVING FROM CARTON

SAVE THIS SHEET FOR FUTURE REFERENCE

PRELIMINARY

1. Remove the unit from the carton.
2. Remove the Motor/Fan Assembly (MFA) from its carton. Industrial models 4 ft. and longer have the MFA shipped separately. If the MFA is inside the unit, loosen the cord from the watertight fitting and pull the cord out (3a) or pull the plug from the motor (1a), then remove the two wing nuts on each side of the pan. Steam and Hot Water coils are shipped loose for field installation.
3. Remove the housing from the carton.

WARNING: TO REDUCE THE RISK OF FIRE, ELECTRIC SHOCK OR INJURY TO PERSONS, OBSERVE THE FOLLOWING:

A. Installation work or electrical wiring must be done by qualified person(s) in accordance with all applicable codes and standards, including fire-rated construction.

B. The combustion airflow needed for safe operation of fuel burning equipment in the area may be affected by the unit's operation. Follow the heating equipment manufacturer's guideline and safety standards, such as those published by the National Fire Protection Association (NFPA), the American Society of Heating, Refrigeration and Air Conditioning Engineers (ASHRAE) and local code authorities.

C. When cutting or drilling into a wall or ceiling, be careful not to damage electrical wiring and other hidden utilities.

Add "W" to the model numbers for Single Row Hot Water Coil and "S" for Single Row Steam Coil. Use "WW" and "SS" for double row design. *Double Row Steam not available with Standard models.

DISCONNECT IN THE FIXED WIRING SHALL BE PROVIDED . FIGURE 1

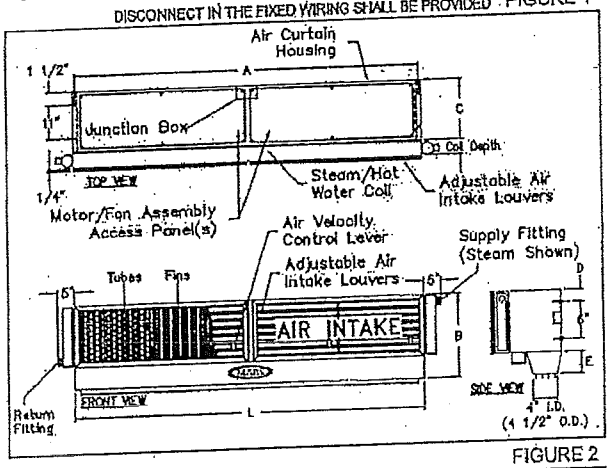

FIGURE 2

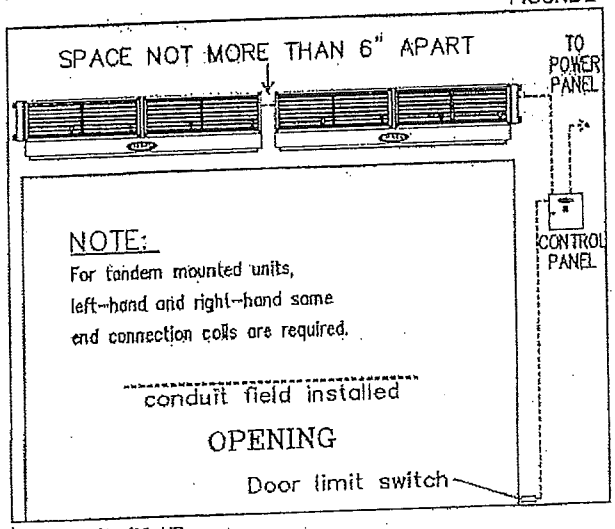

TO INSTALL HOUSING AND MOTOR/FAN ASSEMBLY

1. Measure the housing and then center it on the wall over the doorway opening.
2. Spot holes through 7/16" mounting holes, (2) on each end of the housing. If necessary, drill extra holes in the back of the housing to align with stud spacing. (see Figure 1)
3. Mount the unit with the discharge nozzle 1" above the door opening. If the unit is mounted higher, move it 3/8" away from the wall for every 1" it is moved up above the door. Any void between wall and unit must be sealed for optimum performance. Threaded rod may be used for overhead installation. Holes are field drilled for top mounted units.
4. Use all four mounting holes when installing the housing.
5. When mounting multiple units side by side, allow no more than 6" between the units. (see Figure 2) Same end connections required for tandem mounted units. (1-LH, 1-RH)
6. Replace Motor/Fan Assembly(s) in the housing and secure with wingnuts. Re-connect all motor connections.
7. Align the holes on the 1" Coil flanges, opposite the intake louver, with the PEM nuts mounted on the inlet side of the unit. Fasten the coil to the unit with the #10 hardware provided. R-H Supply and L-H Return, standard.
8. Connect motor to proper voltage. If the unit is three phase, check the rotation of the motor. Motor service access is through the top. (see Figure 1)

ADJUSTMENTS

1. Pull air directional vanes in air discharge nozzle to proper position with air flow slanted slightly outward around 15°.
2. Set air velocity control louvers so that the air stream just reaches the floor to prevent turbulent mixing of inside and outside air.
3. The unit is to be installed such that the airflow is unobstructed.

NOTE: MODEL NUMBER DESIGNATES THE LENGTH OF THE UNIT IN INCHES, WHICH IS DENOTED AS "L". ALL DIMENSIONS ARE IN INCHES.

COIL DEPTH: 4 1/2" - (SINGLE ROW) & 6" - (DOUBLE ROW)

MODEL NUMBER		MOUNTING CENTER A	HEIGHT B	DEPTH C	MOUNTING HOLE LOC. D	NOZZLE HEIGHT E
36*		35 1/8	14	11 1/4	3	3 1/4
42*		41 1/8	14	11 1/4	3	3 1/4
48*		47 1/8	14	11 1/4	3	3 1/4
64-2*		63 1/8	14	11 1/4	3	3 1/4
72-2*		71 1/8	14	11 1/4	3	3 1/4
78-2*		77 1/8	14	11 1/4	3	3 1/4
84-2*		83 1/8	14	11 1/4	3	3 1/4
96-2*		95 1/8	14	11 1/4	3	3 1/4
96-3*		95 1/8	14	11 1/4	3	3 1/4
120-3*		119 1/8	14	11 1/4	3	3 1/4
144-3*		143 1/8	14	11 1/4	3	3 1/4
144-4*		143 1/8	14	11 1/4	3	3 1/4
48HV	EP48	47 1/8	18	14	3 3/8	5
60HV	EP60	59 1/8	18	14	3 3/8	5
72HV-2	EP72-2	71 1/8	18	14	3 3/8	5
84HV-2	EP84-2	83 1/8	18	14	3 3/8	5
96HV-2	EP96-2	95 1/8	18	14	3 3/8	5
120HV-2	EP120-2	119 1/8	18	14	3 3/8	5
120HV-3	EP120-3	119 1/8	18	14	3 3/8	5
144HV-3	EP144-3	143 1/8	18	14	3 3/8	5

OPTIONAL CONTROL PANEL INSTALLATION

A. Connect supply voltage from power panel to control panel. Circuit protection as per NEC by others.

B. Connect motor leads in junction box(es) to terminals in control panel per print. Motor control panel overloads are factory preset.

C. Connect wires from door limit switch to terminals in control panel per print.

D. Check rotation of blower wheels. Switch leads if necessary to correct rotation (three phase only).

E. The door limit switch has normally closed contacts. The contacts open when the door shuts depressing the plunger turning the Air Curtain off.

MAINTENANCE INSTRUCTION

WARNING: TO REDUCE THE RISK OF FIRE, ELECTRIC SHOCK OR INJURY TO PERSONS, OBSERVE THE FOLLOWING:

A. Use this unit only in the manner intended by the manufacturer. If you have questions, contact the manufacturer.

B. Before servicing or cleaning the unit, switch power off at service panel and lock service panel to prevent power from being switched "ON" accidentally.

C. To reduce the risk of electric shock, DO NOT use this fan with any solid state speed control device.

PRELIMINARY

It is imperative to keep the fans clean. Failure to do so may cause excess buildup of residue. This will lower efficiency and eventually throw fans out of balance, which can shorten the life of the blower wheels and cause undue wear on the bearings. The time between cleaning depends upon the type and amount of particles floating in the air. Under normal circumstances, the system will only require cleaning approximately once a year.

Clean motors and fans when necessary for peak operational efficiency. Motor-fan assembly may be easily cleaned by removing it from the housing. Remove the Motor/Fan Assembly from the housing by loosening the watertight fitting and pulling the cord out (3 phase) or by pulling the plug from the motor (1 phase), then removing the two wing nuts on either side of the pan.

Occasionally remove the velocity control louvers and/or inlet screens and wash with soap and water. At the same time, it is advisable to wipe any accumulation of dirt off the motor.

No lubrication is necessary as all motors have lifetime prelubricated, double sealed ball bearings. Motor contains automatic thermal overload protection as standard.

ALL PARTS ARE FOB OUR FACTORY - GARDENA, CA

1/2, 1 or 3 in part numbers below designates motor horse power in air curtain. When ordering parts, include the serial and model number from the name plate of the unit. When ordering blower wheels, specify whether steel or stainless steel.

MOTOR CHARACTERISTICS AVAILABLE (All Voltage and Phase)

1/2 HP.....1750 RPM 1 HP.....1750 RPM
3 HP.....3400 RPM

MOTOR/FAN ASSEMBLY

Complete assembly consists of a motor, blower wheel, blower housing and motor pan. Available in any horse power, voltage and phase.

MOTOR PAN

MP-30-1/2 · MP-30-1 · MP-30-3

VELOCITY CONTROL LOUVERS · DIRECTIONAL VANES
AIR CURTAIN HOUSING · STEAM AND HOT WATER COILS

Specify model number when ordering

BLOWER HOUSING

Universal housings are good for either side of the motor. All sizes available in metal only.

BLOWER WHEEL

MOTOR HP	METAL BLOWER WHEEL
1/2	UNIVERSAL
1	UNIVERSAL
3	UNIVERSAL (STAINLESS ONLY)

NOTE: Universal indicates the wheel may be used on either side of the motor. Direction of wheel rotation is not required.

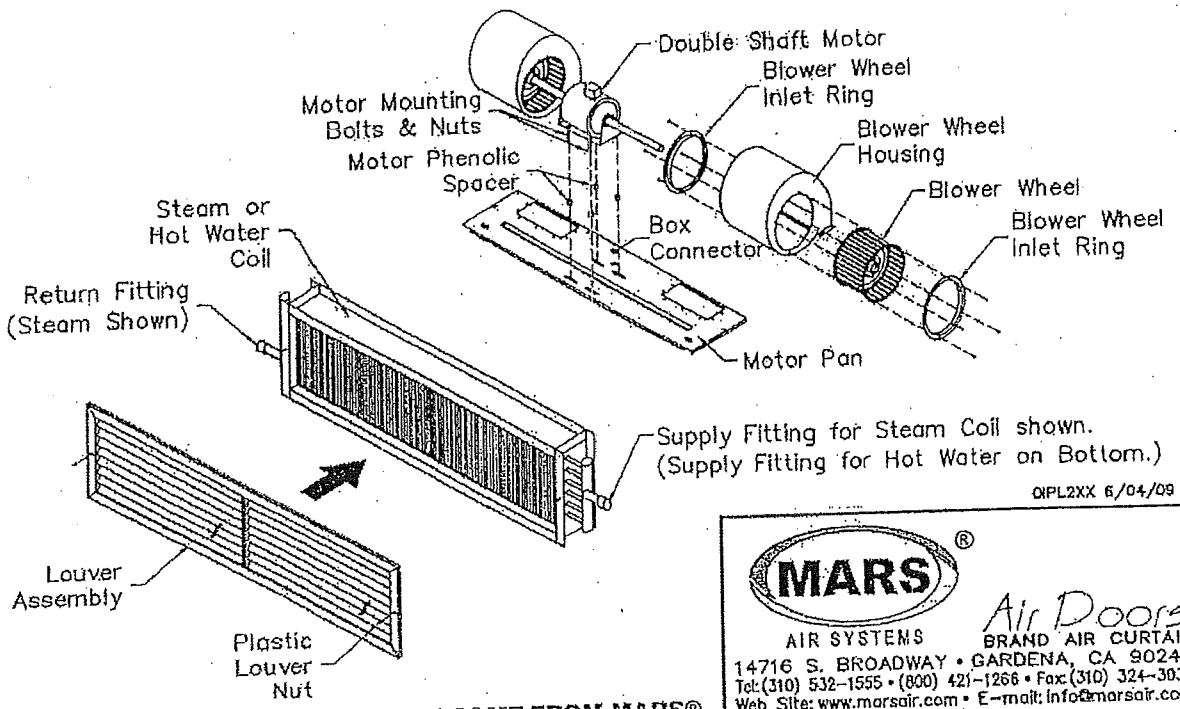

MARS® AIR SYSTEMS
Air Doors BRAND AIR CURTAIN
14716 S. BROADWAY • GARDENA, CA 90248
Tel:(310) 532-1555 • (800) 421-1266 • Fax:(310) 324-3030
Web Site: www.marsair.com • E-mail: info@marsair.com

OPL2XX 6/04/09 MB

THE BEST AIR CURTAINS ON EARTH COME FROM MARS®

MARS®
AIR SYSTEMS

Document No: HT-IOM
Date: 0810

HEATED PRODUCTS SUPPLEMENT

NOTE

Before proceeding, refer to the units specific IOM Manual for safety, installation and start information. Verify proper voltage to the product per local and NEC codes. Ensure proper rotation for units with three phase motors.

Electrically Heated Products

Electrically heated products must be mounted on the inside of the building. Electrically heated products come standard with a thermostat (provided and shipped loose, unless ordered as factory pre-mounted) and is to be field installed.

Note:

1. Electrically heated Low Profile units come with internally mounted controls and available with optional 24 volt or 240 volt thermostat.
2. Electrically heated Standard, High Velocity and Extra Power units include a motor control panel mounted on the right-hand side of the unit, as standard, and a remote 24 volt thermostat with On/Off switch with terminals provided.
3. Electrically heated Wind Stopping and WindGuard units include an electric heater control panel mounted on the right hand side, as standard (FIG. 1). Optional motor/unit control panel available, which includes a remote 24 volt thermostat with On/Off switch with terminals provided.

The thermostat should be mounted as close to the product's discharge air flow as possible in order to best sense the discharged air temperature around the door opening. Connect proper voltage to the product per local and NEC codes. (FIG. 2)

Thermal overload protection is built into the heater coil assembly/assemblies. In the event of an overload condition, electrical power will be disconnected from the heater coil. Upon diagnosing the problem, electrical power can be re-instated to the heater coil(s) by manually resetting the thermal overload lever(s) or buttons(s) located in the unit or panel.

To operate multiple units mounted side by side, utilizing a single door switch and single thermostat, a master/slave configuration is required. (FIG. 2)

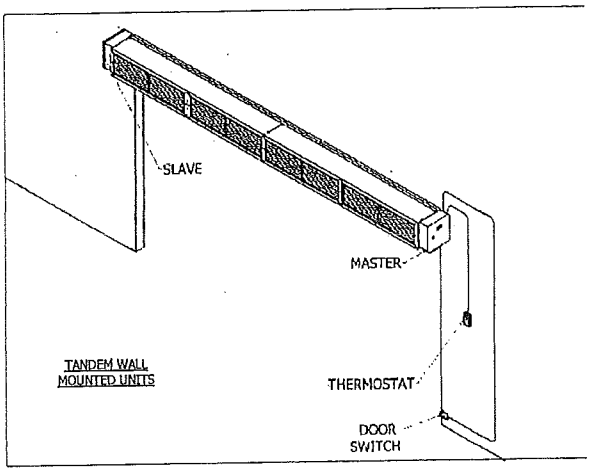

FIG. 1

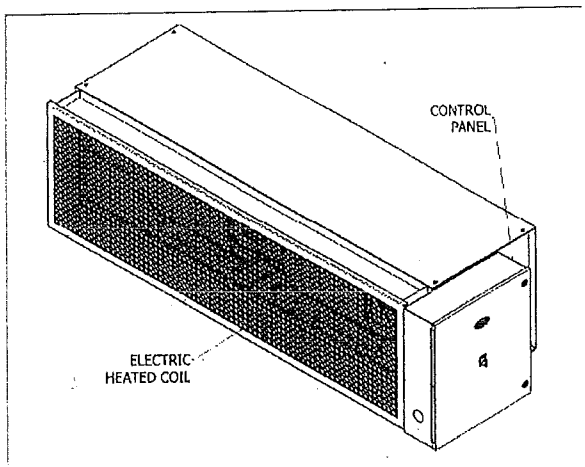

FIG. 2

Steam and Hot Water Coil Heated Products

Steam/Hot Water Coil (coil) heated products must be mounted on the inside of the building. The coil(s) for Low Profile units are shipped internally mounted to the unit. For Standard, High Velocity and Extra Power units, the coil(s) are shipped loose and field installed. Wind Stopping and

WindGuard units are shipped with coil(s) factory mounted.

Once the coil has been secured to the cabinet, access to the motor and fan is through the removable access panels located on the top of the cabinet.

Note: Low Profile and Wind Stopping units require the removal of the coil to access the motor and/or fans.

All piping should be done by a licensed pipe fitter and in accordance with local codes and regulations. Connect the supply and return fittings as required. All traps and valves are sized and field installed by others. Standard coil configuration is right hand supply and left hand return. (FIGS. 3 & 4) Optional temperature controls, if ordered, are to be field installed by others.

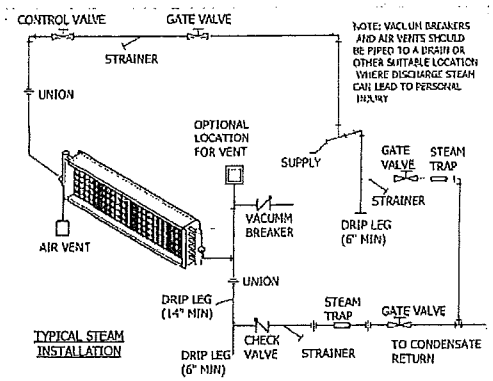

FIG. 3 (STD Shown)

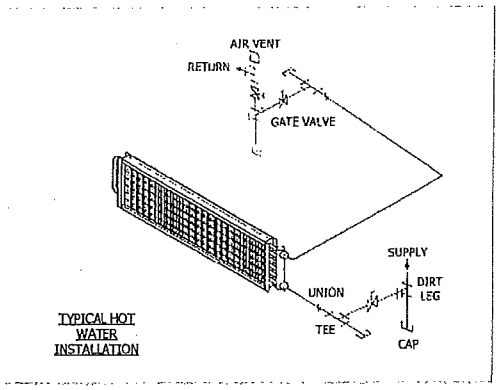

FIG. 4 (LPV Shown)

Gas Heated Products

Gas heated products must be mounted on the inside of the building. The product consists of three major components: the air curtain, transition section(s) and indirect gas fired duct furnaces(s) (FIG 5).

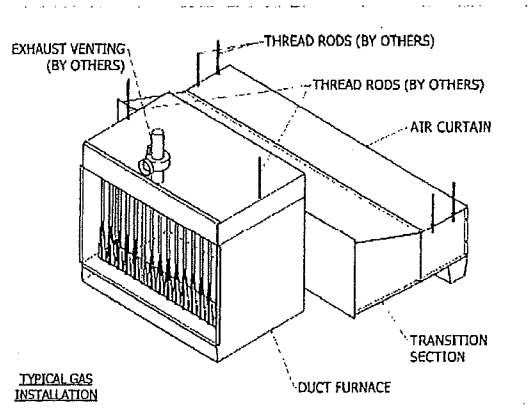

FIG. 5

The transition section(s) are shipped knocked down and are to be field assembled and installed per their supplemental instructions. (FIG. 6)

Note:

1. Assemble the transition section(s).
2. Measure the width of the transition section(s) to determine the installation location for the duct furnace(s).
3. The duct furnace(s) are typically hung from above, with threaded rods, in order to support the weight of the duct furnaces. The duct furnace(s) must be centered and fastened to the transition(s) with the hardware provided.
4. Move the adjustable filler plates to close gaps in the transition(s) and secure the flanges to the transitions.

All gas piping and duct furnace(s) exhaust venting should be done by a licensed pipe fitter and in accordance with local codes and regulations. Power vented exhaust duct runs should not exceed 100' for horizontal venting.

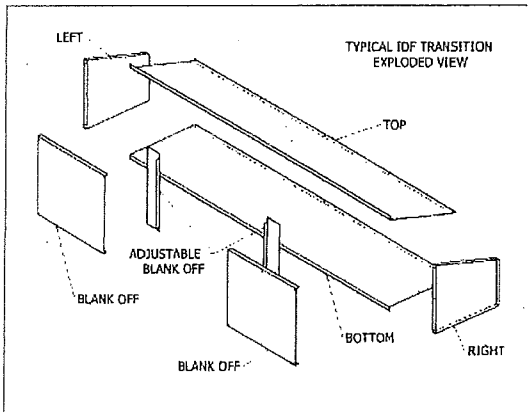

FIG. 6

14716 S. Broadway St., Gardena, CA 90248

(800) 421-1266 • Fax: (310) 324-3030 • www.marsair.com

Tag: VAV11 – 11-3-22

Specification: 15840

Manufacture: Enviro Tech VAV Boxes

Drawing reference:

Location: B2 Ramp Level

ENVIRO TECH VAV BOXES

REP: TECHINCAL AIR SYSTEMS

PHONE: 973-285-0333

ENVIRO-TEC® BY JOHNSON CONTROLS	SINGLE DUCT VAV TERMINALS	
INSTALLATION, OPERATION & MAINTENANCE	New Release	Form ET130.13-NOM1 (808)

MODELS SDR & SDL

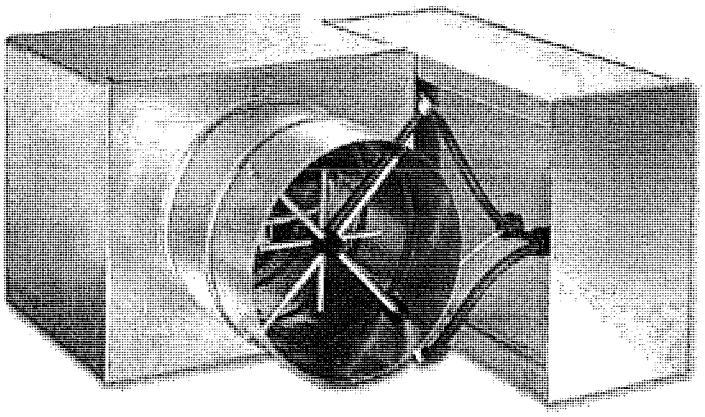

SDR

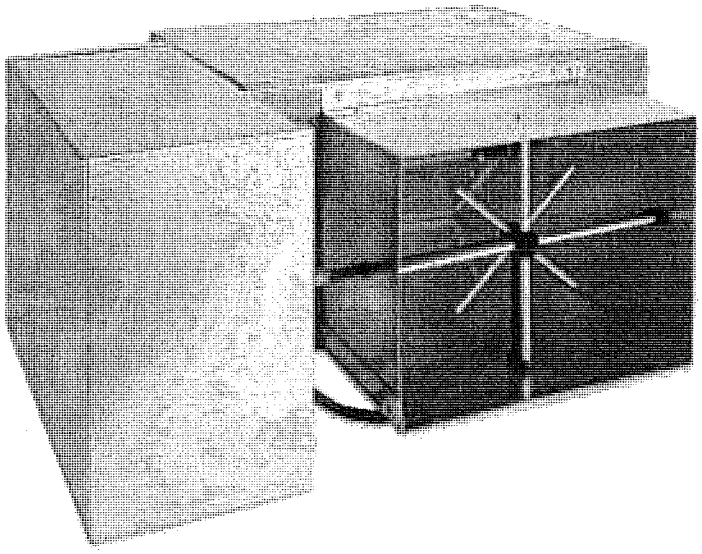

SDL

TABLE OF CONTENTS

SAFETY CONSIDERATIONS....3
INSPECTION....4
STORAGE....4
PRE-INSTALLATION INSPECTION....5
SEQUENCE OF OPERATION....5
Single Duct....5
INSTALLATION....5
Clearances....5
Hanging and Mounting Equipment....5
Unit Weights....6
Duct Connections....6
Critically Sound Applications....7
Coil Connections....7
Electrical....7
OPERATION....7
Start-Up....7
3 Phase Balancing....7
MAINTENANCE....8
Optional Damper Actuator....8
Manual Override....8
Mechanical Angle of Rotation Stops....8
External Terminal Strip....8
Overload Protection....8
Checkout Instructions....8
Damper Shaft....8
Coil....8
Cleaning....9
Electric Heat....9
Minimum Operating Conditions....9
Electric Heater Rack Replacement....9
Electric Heater Element Replacement....9
Heater Troubleshooting Guide....10
(SSR) Troubleshooting Guide....11
Calibration Charts....15

SAFETY SYMBOLS

The following symbols are used in this document to alert the reader to areas of potential hazard:

DANGER indicates an imminently hazardous situation which, if not avoided, will result in death or serious injury.

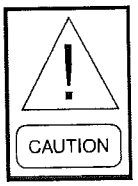

CAUTION identifies a hazard which could lead to damage to the machine, damage to other equipment and/or environmental pollution. Usually an instruction will be given, together with a brief explanation.

WARNING indicates a potentially hazardous situation which, if not avoided, could result in death or serious injury.

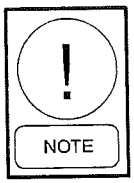

NOTE is used to highlight additional information which may be helpful to you.

SAFETY CONSIDERATIONS

The equipment covered in this manual is designed for safe and reliable operation when installed and operated within its' design specification limits. To avoid personal injury or damage to equipment or property while installing or operating this equipment, it is essential that qualified, experience personnel familiar with local codes and regulations, perform these functions using good judgment and safe practices. *See the following cautionary statements.*

ELECTRICAL SHOCK HAZARDS
All power must be disconnected prior to installation and servicing this equipment. More then one source of power may be present. Disconnect all power sources to avoid electrocution or shock hazards.

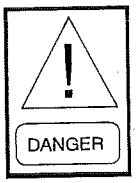

HOT PARTS HAZARD
Electric resistance heating elements must be disconnected prior to servicing. Electric heaters may start automatically; disconnect all power and control circuits prior to servicing to avoid burns.

Check that rigging and lifting equipment can safely support the unit assembly and component weights.

All assemblies must be adequately secured during lifting and rigging by temporary supports and restraints until equipment is permanently fastened and set in its' final location.

All unit temporary and permanent supports must be capable of safely supporting the equipment's weight and any additional live, seismic or dead loads that may be encountered. All supports must be designed to meet applicable local codes and ordinances.

All fastening devices must be designed to mechanically lock the assembly in place without the capability of loosening or breaking away due to system operation and vibration.

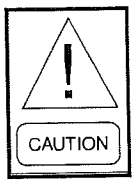

Secure all dampers when servicing damper, actuators or linkage. Dampers may activate automatically, disconnect the control circuits or pneumatic control systems to avoid injury.

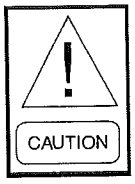

Protect adjacent flammable material when brazing. Use flame and heat protection barriers where needed. Have fire extinguisher ready for immediate use.

INSPECTION

Upon receipt of equipment, carefully check all items against the bill of lading to ensure that all equipment has been received (including shipped loose items). Note any discrepancy on the bill of lading before signing.

Inspect all equipment for any signs of damage caused during transit. On units with re-heat, check the coil fins and/or ensure that the resistance heat coils are not damaged. Note any visual damage on the bill of lading before signing. Immediately report all visual and concealed damage to the carrier and file a claim with the carrier.

Locate the model number on the nameplate and check that the correct units have been received. Verify that all options have been included, such as controls, heating coils, etc. Also ensure that unit voltage agrees with the building parameters. If a discrepancy is discovered between what was ordered and received, contact your local Environmental Technologies representative immediately.

DO NOT USE FLOW SENSOR, CONNECTING TUBES, COIL STUBOUTS OR DAMPER SHAFT AS A HANDLE WHEN LIFTING OR MOVING EQUIPMENT, AS DAMAGE MAY OCCUR.

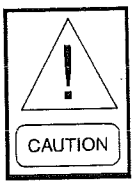

DO NOT HANDLE EQUIPMENT'S HEATING ELEMENTS, AS PERMANENT DAMAGE MAY OCCUR.

CHECK assembly and component weights to be sure that the rigging equipment can handle them safely. Note; also check the centers of gravity and any specific rigging instructions.

CHECK for adequate ventilation so fumes do not migrate through ductwork to occupied spaces when welding or cutting around the unit.

DO NOT work on damper until associated actuator is disconnected.

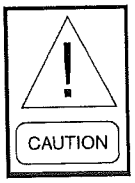

NEVER pressurize equipment above specified test pressure.

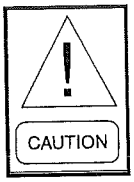

PROTECT adjacent flammable materials when brazing. Use flame and heat protection barriers where needed. Have a fire extinguisher at hand and ready for immediate use.

STORAGE

If equipment is to be stored prior to installation, observe the following precautions:

1. Choose a dry storage site that is reasonably level and sturdy to prevent undue stress or permanent damage to the equipment. Set equipment off ground if in moisture prone areas.
2. Tag and store in a safe place until needed. Cover entire equipment with protective tarp or moisture proof cover. Extend cover under equipment if stored on ground. Secure cover with adequate tie downs and store indoors. Be sure that piping connections have protective shipping caps installed.

PRE-INSTALLATION INSPECTION

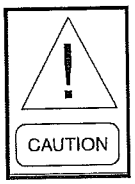

DO NOT USE FLOW SENSOR, CONNECTING TUBES, COIL STUBOUTS OR DAMPER SHAFT AS A HANDLE WHEN LIFTING OR MOVING EQUIPMENT, AS DAMAGE MAY OCCUR.

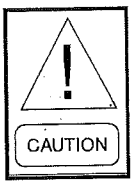

DO NOT HANDLE EQUIPMENT'S HEATING ELEMENTS, AS PERMANENT DAMAGE MAY OCCUR.

Ensure that all linkages are connected properly. Check the linkage that connects the actuator to the damper shaft to ensure that the nuts are tight.

While viewing the damper from the discharge of the unit, rotate the shaft fully. The damper should close fully and there should be no gaps between the damper gasketing and the inside of the valve.

SEQUENCE OF OPERATION

Single Duct

The basic unit consists of a sheet metal casing and an air valve, which is used to modulate the air being delivered into the occupied zone. Air enters the air valve inlet and exits into the sheet metal casing to be distributed to the occupied zone through ductwork attached to the discharge of the unit.

The basic unit can be ordered with either a factory mounted hot water heating coil or an electric heater.

These re-heat units are used primarily to reheat the air-to-zone temperature when the load in the occupied space drops off.

The primary air is modulated through the FlowStar™ air valve by rotating the damper blade. The air valves come in rectangular and round. The round valves only come in diameters of 4, 5, 6, 8, 10, 12, 14 and 16 inches; an adapter must be used for metric ductwork.

INSTALLATION

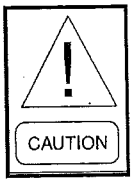

DO NOT USE FLOW SENSOR, CONNECTING TUBES, COIL STUBOUTS OR DAMPER SHAFT AS A HANDLE WHEN LIFTING OR MOVING EQUIPMENT, AS DAMAGE MAY OCCUR.

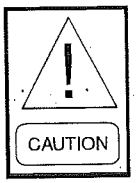

DO NOT HANDLE EQUIPMENT'S HEATING ELEMENTS, AS PERMANENT DAMAGE MAY OCCUR.

All terminal equipment with electric heaters must be installed in a horizontal plane with respect to the airflow stream. Low height equipment (Model SDL) can be flipped over in the field to vary or change control section handing.

Clearances

All equipment covered in this document, including those with electric heat, are ETL listed for 0.0" clearance to combustibles. Refer to NEC and/or local codes for minimum electrical clearances required for service. Equipment should not make contact with any structure located above the equipment without appropriate isolation. Equipment supplied with bottom access panels requires sufficient clearance to access fasteners, and to lower and slide panel horizontally until clear of bottom of unit.

Hanging and Mounting Equipment

Although the basic equipment is generally light enough that it can be supported by the ductwork, Johnson Controls strongly recommends that all equipment be suspended from the upper most ceiling or a structural element of the building, independent of the false ceiling grid. Suspension devises are field supplied, sized and designed by others. Johnson Controls will not accept responsibility for unit support. Equipment must be installed in a level horizontal plane. Failure to level equipment properly may prevent proper operation of controls. Provisions for proper support in seismically active regions is the responsibility of others. *See table 1 through 4 for unit weights.*

UNIT WEIGHTS

TABLE 1 - SINGLE DUCT TERMINAL UNIT WEIGHTS

UNIT SIZE	SDR		SDR w/ SA		SDR w/ EH	
	SINGLE WALL	DOUBLE WALL	SINGLE WALL	DOUBLE WALL	SINGLE WALL	DOUBLE WALL
04	20 (9)	25 (11)	35 (16)	50 (23)	64 (29)	79 (36)
05	20 (9)	25 (11)	35 (16)	50 (23)	64 (29)	79 (36)
06	19 (9)	24 (11)	34 (15)	49 (22)	62 (28)	77 (35}
08	20 (9)	26 (12)	37 (17)	53 (24)	71 (32)	87 (39)
10	25 (11)	32 (15)	44 (20)	62 (28)	78 (35)	96 (44)
12	28 (13	36 (16)	50 (23)	71 (32)	89 (40)	110 (50)
14	35 (16)	44 (20)	59 (27)	84 (38)	106 (48)	131 (59)
16	37 (17)	47 (21)	63 (29)	90 (41)	113 (51)	140 (64)
19	49 (22)	62 (28)	85 (39)	120 (55)	141 (64)	176 (80)
22	51 (23)	65 (29)	90 (41)	127 (58)	148 (67)	185 (84)

TABLE 2 - SDR WATER COIL WEIGHT ADDS

UNIT SIZE	# OF ROWS			
	1 ROW	2 ROW	3 ROW	4 ROW
04	4 (2)	5 (2)	8 (4)	12 (5)
05	4 (2)	5 (2)	8 (4)	12 (5)
06	4 (2)	5 (2)	8 (4)	12 (5)
08	4 (2)	6 (3)	9 (4)	13 (6)
10	5 (2)	8 (4)	12 (5)	18 (8)
12	7 (3)	10 (5)	16 (7)	22 (10)
14	9 (4)	14 (6)	21 (10)	30 (14)
16	10 (5)	16 (7)	24 (11)	34 (15)
19	12 (5)	20 (9)	28 (13)	40 (18)
22	13 (6)	22 (10)	32 (15)	44 (20)

Adds for water coils reflect actual operating weight.

TABLE 3 - SINGLE DUCT LOW HEIGHT TERMINAL UNIT WEIGHTS

UNIT SIZE	SDL		SDL w/ SA		SDL w/ EH	
	SINGLE WALL	DOUBLE WALL	SINGLE WALL	DOUBLE WALL	SINGLE WALL	DOUBLE WALL
10	26 (12)	30 (14)	43 (19)	58 (26)	62 (28)	77 (35)
12	28 (13)	35 (16)	49 (22)	68 (31)	74 (34)	93 (42)
14	39 (18)	47 (21)	62 (28)	82 (37)	90 (41)	110 (50)
16	45 (20)	55 (25)	73 (33)	96 (44)	103 (47)	126 (57)

TABLE 4 - SDL WATER COIL WEIGHT ADDS

UNIT SIZE	# OF ROWS			
	1 ROW	2 ROW	3 ROW	4 ROW
10	9 (4)	12 (5)	15 (7)	18 (8)
12	11 (5)	15 (7)	19 (9)	23 (10)
14	13 (6)	18 (8)	22 (10)	27 (12)
16	15 (7)	21 (9)	27 (12)	32 (15)

Adds for water coils reflect actual operating weight.

When requested, equipment is supplied with optional hanger brackets for use with up to a 3/8" diameter hanger rod. *See submittal drawings for hanger bracket locations.*

Hanger straps may be utilized as an alternate means of suspending the equipment. Do not secure hanger straps to electric heaters, coils or control enclosures. Hanger straps can be mounted directly to the sides and bottom of equipment casing, such that they do not interfere with working components or access panels, using screws that do not penetrate the unit cabinet more than 3/8".

When hanging equipment, always use the support method as prescribed for rectangular duct in the job specifications.

Duct Connections

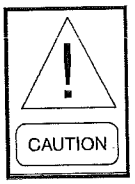

When fastening ductwork to equipment, DO NOT use fasteners that penetrate equipment cabinet more than 3/8" [10mm]. Fasteners penetrating the equipment cabinet over 3/8" [10mm] may come in contact with live electrical parts or penetrate other components within the equipment casing causing damage.

All duct connections should be configured and installed in accordance with SMACNA guidelines and all local code requirements.

Allow a minimum of 1½-duct diameters of straight duct prior to equipment inlet and equipment discharge. The diameter of the inlet duct for round valves must be equal to the listed size of the equipment. The round air valve inlet collar of the equipment is 1/8" smaller then listed size in order to allow the round ductwork to slip over the air valve inlet collar. DO NOT INSERT DUCTWORK INTO AIR VALVE INLET COLLAR. When making ductwork connection to air valve inlet collar and insulating air valve inlet, take caution not to damage or remove the flow sensor connections, which are vital to unit control. Provide insulation around entire inlet collar (all the way to the equipment casing).

Permissible discharge duct connections are straight flanged, slip and drive or drive and screw.

If equipment is to be installed in a location with high humidity, external insulation around the heating coil should be installed.

Sound Critical Applications

Flexible duct connectors are not recommended on equipment discharge. The sagging membrane of these fittings can cause turbulence and higher air velocities that generate noise. Also, lightweight membrane material allows noise to breakout, which can increase sound levels in the space below.

Coil Connections

Hot water and steam coils are male sweat connections. Use appropriate brazing alloy for system temperature and pressure. Refer to unit construction submittal drawing for specific connection size. MAXIMUM HYDRONIC SYSTEM OPERATING PRESSURE MUST NOT EXCEED 300 PSIG. MAXIMUM STEAM SYSTEM PRESSURE MUST NOT EXCEED 15 PSIG.

Electrical

All field wiring must comply with NEC and all local codes. Electrical and/or control wiring diagrams are located on the control enclosure box. All electric heaters are staged per specifications.

The installing electrician should rotate the incoming electric service by phase to help balance the building electrical load.

Minimum circuit ampacity (MCA) designates the maximum operating load of the equipment for sizing wire feeders. Fuse size of the internal fuse if supplied. Maximum Overcurrent Protection (MOP) designates the largest breaker or fuse in the electrical service panel that can be used to protect the equipment.

Use Copper conductors only.

OPERATION

Start-Up

Thorough safety precautions should always be taken when performing startup and service. Only qualified individuals should perform these tasks.

Check that all electrical work is finished and properly terminated. Check that all electrical connections are tight and that the proper voltage is connected.

3 Phase Balancing

AC power imbalance must not exceed 2%. Be sure that the following guides are met:

1. AC power is within 10% of rated voltage at rated frequency. *(See equipment nameplate for ratings).*
2. AC power is within 5% of rated frequency at rated voltage.
3. A combined variation in the voltage and frequency of 10% (sum of absolute values) of rated values, provided the frequency variation does not exceed 5% of rated frequency.

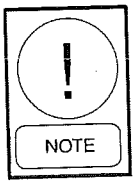

Equipment with electric heat requires a minimum of 0.1" w.g. downstream static pressure.

Prior to start-up, the project control sequence/wiring diagram should be obtained and thoroughly understood. If factory supplied analog or DDC controls are utilized, refer to the applicable Operation Manual for start-up and balancing information.

MAINTENANCE

Optional Damper Actuator

An optional factory mounted floating type actuator is available, which mounts directly to the damper operating shaft. The actuator is not provided with and does not require any limit switches but is electronically protected against overload. *See ACT24 Actuator IOM at www.enviro-tec.com.*

Manual Override

A button on the side of the actuator cover disengages the gear train so the drain shaft can be moved manually. Releasing the button will re-engage the gear train.

Mechanical Angle of Rotation Stops

The adjustable stops may be field adjusted to halt the rotation of the damper blade before the damper blade reaches the damper stops. The actuator can be indefinitely stalled in any position without harm.

1. Loosen the two end stop screws using a No. 2 Phillips head screwdriver, being careful not to unscrew the captive nut under the slot.
2. Move the stops (in 2.5° steps) to the desired position and retighten the screws.

External Terminal Strip

The external terminal strip is located on the top of the actuator. Connections are numbered. The terminals are designed for 26 to 16 gauge wires. For most installations, 18 or 16 gauge wire will work well with the actuator *(see table 5 for maximum wire lengths).*

TABLE 5 - MAXIMUM WIRE LENGTHS	
WIRE SIZE	MAX FEET
16 GA	1225 FT
18 GA	725 FT
20 GA	400 FT
22 GA	200 FT

Overload Protection

The actuators are electronically protected against mechanical overload. In the actuator, an electronic circuit maintains the current at a level that will not damage the motor while providing adequate holding torque.

Checkout Instructions

1. Disconnect actuator from the controller.
2. Apply 24 VAC to the COM and CW terminals on the actuator. Actuator should rotate in a clockwise direction.
3. Apply 24 VAC to the COM and CCW terminals on the actuator. Actuator should rotate in a counter clockwise direction.
4. If actuator moves in both directions, it is operational.
5. If the actuator does not rotate, it may be at an end stop or there is a problem with the damper.
6. Loosen the set screw to free the actuator from the damper shaft. Check to make sure that the damper shaft rotates freely.
7. Check to make sure that actuator is not against stop. Repeat steps 2 and 3.
8. If actuator does not rotate, replace.

Damper Shaft

There is an indicator on the end of the damper shaft that can be used to determine the position of the damper blade. If the indicator is horizontal, the damper is completely open. The damper shaft is ½" diameter.

Coil

The frequency of required cleaning is dependent on the operating hours of the system, filter maintenance and efficiency as well as dirt load.

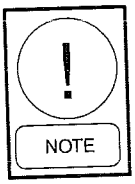

Important: Coils may become externally dirty as result of normal operation. Dirt on the surface of the coil reduces its ability to transfer heat that can result in reduced performance, and increased operating energy cost. If the dirt on the surface of the coil becomes wet, microbial growth (mold) can result, possibly causing unpleasant odors and serious health related indoor air quality problems.

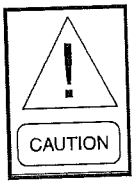

Fin edges are sharp. Fins are fragile; care must be exercised to avoid damaging fins. Do not use solutions to clean coils; drain pans are not present to remove collected solution.

Cleaning

1. Disconnect all electrical power to the equipment, tag and lock out power source.
2. Gain access to coil either through ductwork or optional coil access panel.
3. Use soft brush and vacuum to remove loose debris from sides of coil. Do not use fluid or solvents to clean coils, as no provisions for collecting liquids exist on this type of equipment.
4. Straighten any coil fins that may have been damaged during cleaning process with fin comb.
5. Replace ductwork or access panel and restore electrical power to equipment.

Electric Heat

ENVIRO-TEC® electric heaters require little or no maintenance.

Electric heaters come equipped with a primary auto-reset limit switch. These limit switches provide protection against overheating. The auto-reset limits switches automatically cut the heater off when overheating occurs, and turns the heater back on when the elements have cooled down. Electric heaters also come equipped with a secondary one-time trip limit switch. Should the secondary limit switches trip, they will need to be replaced with a limit switch that has the same trip temperature as the one-time trip limit switch that was originally supplied with the electric heater. An optional manual reset secondary is available, which can be reset by depressing the reset switch.

Minimum Operating Conditions

Airflow must be at least 70 CFM per kW. A minimum of 0.1" w.g. external pressure is required.

Electric Heater Rack Replacement

ENVIRO-TEC® HEATERS

1. Turn off power supply before servicing.
2. Locate T-Plate inside on heater control enclosure.
3. Before removing wires from the element rack T-Plate, mark where the wires are connected so that they can be reconnected correctly on the new element rack.
4. Remove the wires and screws holding the heater T-plate in the control enclosure and remove element rack.
5. Insert new element rack into control enclosure and replace screws to secure the element rack to control enclosure.
6. Replace wires.
7. Close control enclosure cover before turning on the power.

Electric Heater Element Replacement

TUTCO HEATERS

1. Turn off power supply before servicing.
2. Disconnect field wiring from Electric Heater Control Enclosure.
3. Disconnect Amp Plug Connectors if equipped.
4. Remove 4 mounting screws from inside Electric Heater Control Enclosure.
5. Slide entire heater assembly out of Single Duct Terminal.
6. Remove wires and any jumpers from heater element terminal ends, noting which wire and jumper goes to which terminal.
7. Remove ¼" hex head screws located near terminal ends.
8. Remove ¼" hex head screws from opposite of terminal end on heater rack.
9. Remove elements and replace with new ones.
10. Reassemble, replace wires correctly.
11. Close control enclosure cover before turning on power.

ELECTRIC HEATER TROUBLESHOOTING GUIDE

ENVIRO-TEC® AND TUTCO

TABLE 6 - HEATER TROUBLESHOOTING GUIDE

Check wiring diagrams to ensure that heater is properly wired.

SYMPTOM	POSSIBLE CAUSE	CORRECTIVE ACTION
HEATER DOES NOT OPERATE	No Power	Check Disconnect.
	No Control Voltage	Check Control Signal (i.e. 24 VAC).
		Check transformer and transformer fusing (if applicable), replace if necessary.
	Blown Fuse	Replace fuse.
	Open Limit (primary or secondary)	Replace limits or reset as applicable.
		Check for continuity across limit to determine if open, replace as necessary.
	Airflow Incorrect Direction	Check sensing tube, rotate if needed.
	Low Airflow Static Pressure	Increase airflow.
	Damaged Elements	Check for open or damaged elements and replace as necessary.
LOW OR HIGH TEMPERATURE RISE	Incompatible Thermostat or Controller	Check Wiring.
		Check for compatibility.
	Problems with Additional Stages	Check location of thermostat; may be installed in a "too hot" or "too cold location. Check heat outputs on controller.
		Check contactors for open coil.
		Check for damaged elements.
	Incorrect CFM	Check for blocked duct or location of heater.
SHORT CYCLING	Improper Airflow	Check for even airflow across the face of the element section.
		Check for blocked duct.
		Verify installation per SMACNA and ASHRAE guidelines.
		Check for dirty filters.
	Low CFM	*See remedies for "Improper Airflow".*
		Check air velocity of 70 CFM per kW.
HEATER WITH SSR DOES NOT OPERATE	Incorrect Signal Applied	Verify signal input.
	Interface Board Fuse Blown	Replace fuse.
	See SSR Troubleshooting (next page)	

PROPORTIONAL HEAT CONTROL

(SSR) TROUBLESHOOTING GUIDE

ENVIRO-TEC® Heaters

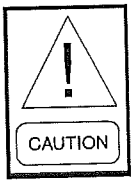

Lethal voltages are present in the heater control enclosure. Use extreme caution when taking measurements in these units. Always disconnect power before removing or re-applying any connections.

1. Before applying power, verify wiring matches diagram in cover of heater control enclosure, and that correct line voltage has been wired to heater line block.
2. Verify 24 VAC +15% or -10% between P1 and P2 of interface circuit board (ETPHCI, ETPHCV2, etc., depending on input).
3. The table below lists responses to input signal by interface model as explained in step 4. If any of these inputs cannot be obtained, refer to the literature on the device that is supposed to provide the input. Otherwise, proceed to step 4.

INTERFACE MODEL	"PULSE" INPUT	FULL OFF INPUT	FULL ON INPUT	INPUTS
ETPHCI	12.0 mA	4.0 mA	20.0 mA	Sig, Com
ETPHCV2	6.0 VDC	2.0 VDC	10.0 VDC	Sig, Com
ETPHCC	50%	0 VAC	24 VAC	Sig, Com
ETPHCC1	50%	0 VAC	24 VAC	+18, Com

4. Apply Full Off Input per table above. If the unit is three phase, verify that the LED on the SSR (solid state relay) is off. If the unit is single phase, measure voltage between P4 and P6 and verify 0.3 VDC + or - 0.3 VDC. Replace the interface circuit board if the voltage is higher than specified, or the LED is on.
5. Apply Full On Input per table above. If the unit is three phase, verify that the LED on the SSR (solid state relay) is on. If the unit is single phase, measure voltage between P4 and P6 and verify between 3 and 5 VDC.
6. If the module provided is an ETPHCC or ETPHCC1, go to step 7. Apply "Pulse" Input per table above. If the unit is three phase, verify that the LED on the SSR (solid state relay) is flashing at an interval of about one second. If the unit is single phase, the voltage between P4 and P6 of the interface board should vary between the Full Off and Full On voltages in steps 4 and 5 in intervals of about one second.

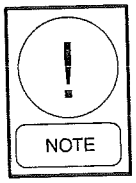

Some voltmeters will not respond this quickly, so the value of the voltages may not appear to be correct; however, if the voltage appears to be changing at regular intervals, it may be assumed that this function is operating properly.

This completes the low voltage portion of the unit test. Go to step 8.

7. For the ETPHCC or ETPHCC1, the associated consignment controller must be directed to output a 50% On pulse width modulation signal. For three phase, verify that the LED is pulsing at regular intervals. The rate of the pulse is based on the output from the consignment controller. If the unit is single phase, the DC voltage between P4 and P6 of the interface board should vary between the full Off and full On voltages in steps 4 and 5.

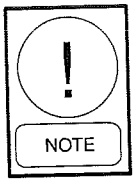

Some voltmeters will not respond this quickly, so the value of the voltages may not appear to be correct; however, if the voltage appears to be changing at regular intervals, it may be assumed that this function is operating properly.

8. If the heater always remains energized when power is applied, remove the wire from P4 of the interface circuit board. If the heat remains on, there is a wiring error or the SSR is defective.

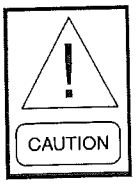

Remove Power From the Unit Before Proceeding With the Next Step.

9. If the heater is always de-energized when power is applied, remove the line and load connections to the proportional heat control and temporarily tie them together. If the system is a three phase arrangement, do the phases one at a time.

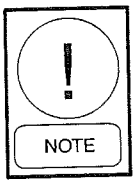

Always remove power from the unit before moving to the next phase).

Make sure there is no danger of the temporary connection shorting to another component or the chassis. Briefly reapply power. If the section of heat under test now energizes, the SSR is defective. If heater still will not energize, one of the heater safety devices (limits, safety contactor or airflow switch) or elements is defective.

PROPORTIONAL HEAT CONTROL

(SSR) TROUBLESHOOTING GUIDE

Tutco Heaters, All Power Modules

- Install the ammeter on the line voltage input wire of heater.
- This is your primary source of information to know if the heater is operative or not.
- A multimeter set in Ohms cannot be used to confirm that the high voltage contact of a power module is closed.
- You cannot confirm R820 power module operation unless a load is applied

NO DEMAND, ex. 277 Vac

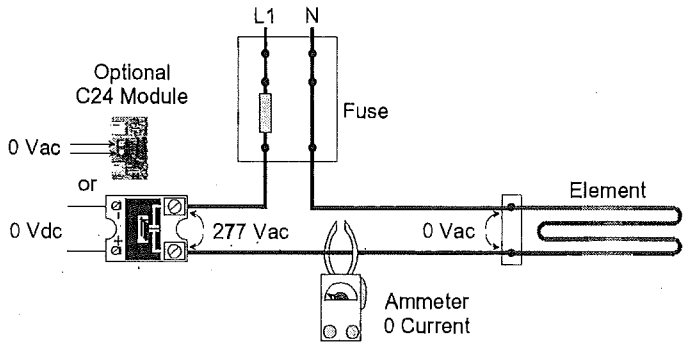

WITH 100 % HEATING DEMAND, ex. 277 Vac

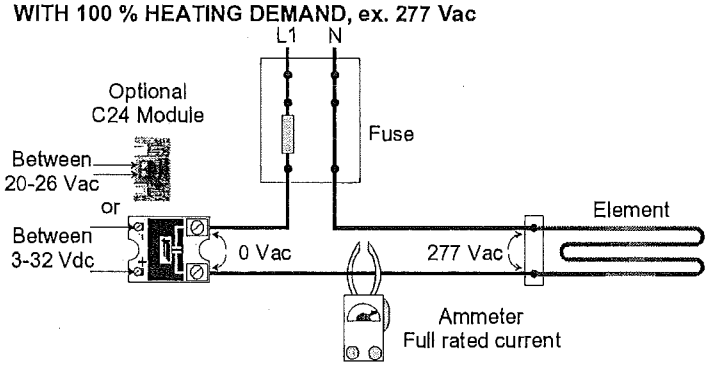

| TUTCO HEATER INTERFACE |

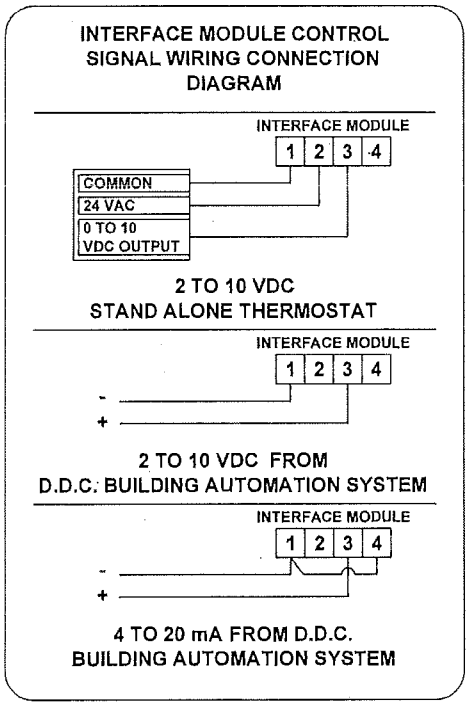

CALIBRATION CHARTS

FlowStar™ Calibration Chart

(For dead-end differential pressure transducers)

Model SDR

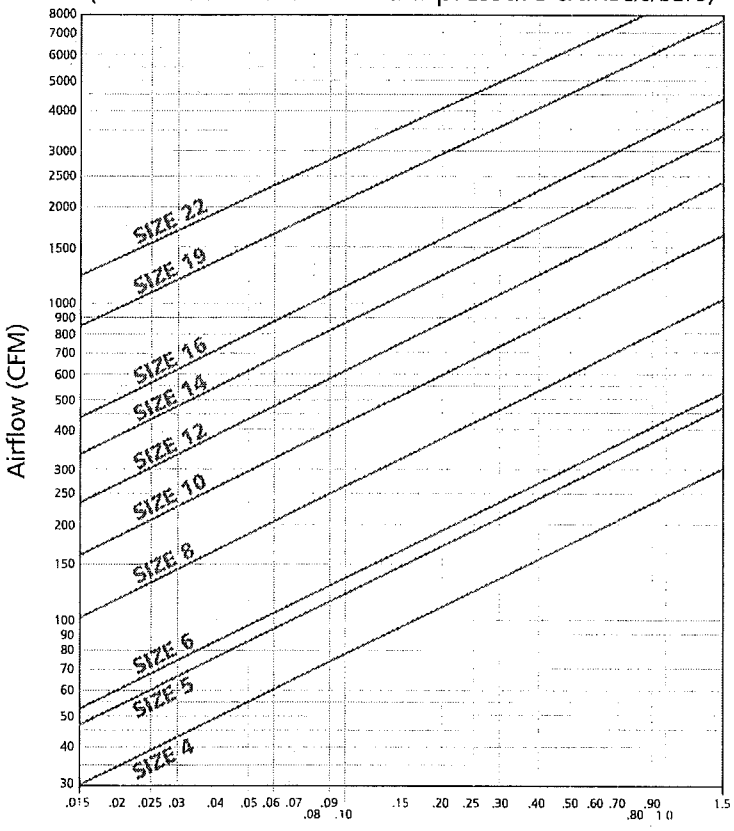

NOTE: Maximum and minimum CFM limits are dependent on the type of controls that are utilized. Refer to the table below for specific values. When DDC controls are furnished by others, the CFM limits are dependent on the specific control vendor that is employed. After obtaining the differential pressure range from the control vendor, the maximum and minimum CFM limits can be obtained from the chart above (many controllers are capable of controlling minimum setpoint down to .015" w.g.).

UNIT SIZE	400 SERIES (PNEUMATIC) STANDARD CONTROLLER		7000 SERIES ANALOG ELECTRONIC		DDC CONSIGNMENT CONTROLS (See NOTES Below)				
					MIN.			MAX.	
	MIN.	MAX.	MIN.	MAX.	Min. transducer differential pressure (in. w.g.)			Max. transducer differential pressure (in. w.g.)	
					0.015	0.03	0.05	1.0	≥1.5
4	43	250	35	250	30	43	55	250	250
5	68	350	50	350	48	65	88	350	350
6	75	490	60	550	53	75	97	435	530
8	145	960	115	1000	105	145	190	840	1000
10	235	1545	185	1600	165	235	305	1355	1600
12	340	2250	285	2300	240	340	440	1975	2300
14	475	3100	390	3100	335	475	615	2750	3100
16	625	4100	520	4100	440	625	805	3595	4100
19	1180	6500	1025	6500	845	1180	1510	6375	6500
22	1730	8000	1450	8000	1260	1730	2200	8000	8000

Notes:

1. Minimum and maximum airflow limits are dependent on the specific DDC controller supplied. Contact the control vendor to obtain the minimum and maximum differential pressure limits (inches w.g.) of the transducer utilized with the DDC controller.
2. Maximum CFM is limited to value shown in General Selection Data.
3. FlowStar™ differential pressure tubing connections: High side indicated by red tubing; Low side indicated by black tubing.

FlowStar™ Calibration Chart

(For dead-end differential pressure transducers)

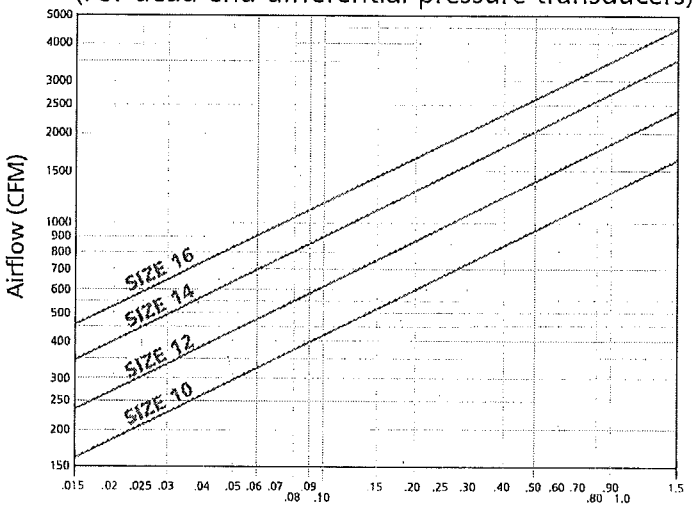

Model SDL

NOTE: Maximum and minimum CFM limits are dependent on the type of controls that are utilized. Refer to the table below for specific values. When DDC controls are furnished by others, the CFM limits are dependent on the specific control vendor that is employed. After obtaining the differential pressure range from the control vendor, the maximum and minimum CFM limits can be obtained from the chart above (many controllers are capable of controlling minimum setpoint down to .015" w.g.).

UNIT SIZE	400 SERIES (PNEUMATIC) STANDARD CONTROLLER		7000 SERIES ANALOG ELECTRONIC		DDC CONSIGNMENT CONTROLS *(See Notes Below)*				
					MIN.			MAX.	
	MIN.	MAX.	MIN.	MAX.	Min. transducer differential pressure (in. w.g.)			Max. transducer differential pressure (in. w.g.)	
					0.015	0.03	0.05	1.0	≥1.5
10	235	1545	170	1600	170	235	305	1370	1600
12	340	2250	240	2300	240	340	435	1955	2300
14	495	3100	350	3100	350	495	640	2855	3100
16	660	4100	465	4100	465	660	850	3800	4100

Notes:

1. Minimum and maximum airflow limits are dependent on the specific DDC controller supplied. Contact the control vendor to obtain the minimum and maximum differential pressure limits (inches w.g.) of the transducer utilized with the DDC controller.
2. Maximum CFM is limited to value shown in General Selection Data.
3. FlowStar™ differential pressure tubing connections: High side indicated by red tubing; Low side indicated by black tubing.

Johnson Controls

©2008 Johnson Controls, Inc.

P.O. Box 423, Milwaukee, WI 53203
www.johnsoncontrols.com

Printed in USA ET130.13-NOM1 (808)
New Release

Tag: EF-2.1-2.5, EF-44A,45A,46A & 47A, TF-11.1, TF-11.2

Specification: 15860

Manufacture: Cook Fans

Drawing reference: Ramp Level

Location: B2 Ramp Level

COOK FANS

REP: MECHANICAL TECH

PHONE: 973-616-3800

COOK

SQN

Centrifugal Square Inline Fans

INSTALLATION, OPERATION, AND MAINTENANCE MANUAL

This publication contains the installation, operation and maintenance instructions for standard units of the *SQN-Centrifugal Square Inline Fans*. Carefully read this publication prior to any installation or maintenance procedure.

Loren Cook catalog, *SQN*, provides additional information describing the equipment, fan performance, available accessories, and specification data.

For additional safety information, refer to AMCA publication 410-96, *Safety Practices for Users and Installers of Industrial and Commercial Fans.*

All of the publications listed above can be obtained from Loren Cook Company by phoning 417.869.6474, extension 166; by FAX at 417.832.9431; or by e-mail at info@loren-cook.com.

For information on special equipment, contact Loren Cook Company Customer Service Department at 417.869.6474.

Receiving and Inspection

Immediately, upon receipt of an SQN fan, carefully inspect the fan and accessories for damage and shortage.

- Turn the wheel by hand to ensure it turns freely and does not bind.
- Inspect dampers for free operation of all moving parts.
- Record on the *Delivery Receipt* any visible sign of damage.

Handling

Lift the fan by the outside housing (box). Never lift by the shaft or motor.

Storage

If the fan is stored for any length of time prior to installation, completely fill the bearings with grease or moisture-inhibiting oil. Refer to *Lubricants* on page 6. Also, store the fan in its original crate and protect it from dust, debris and the weather.

To maintain good working condition of a SQN when it is stored outdoors, or on a construction site, follow the additional steps below:

- Cover the inlet and outlet, and belt tunnel opening to prevent the accumulation of dirt and moisture in the housing.
- Periodically rotate the wheel and operate dampers (if supplied) to keep a coating of grease on all internal bearing parts.
- Periodically inspect the unit to prevent damaging conditions.

WARNING
This unit has rotating parts. Safety precautions should be exercised at all times during installation, operation, and maintenance.
ALWAYS disconnect power prior to working on fan.

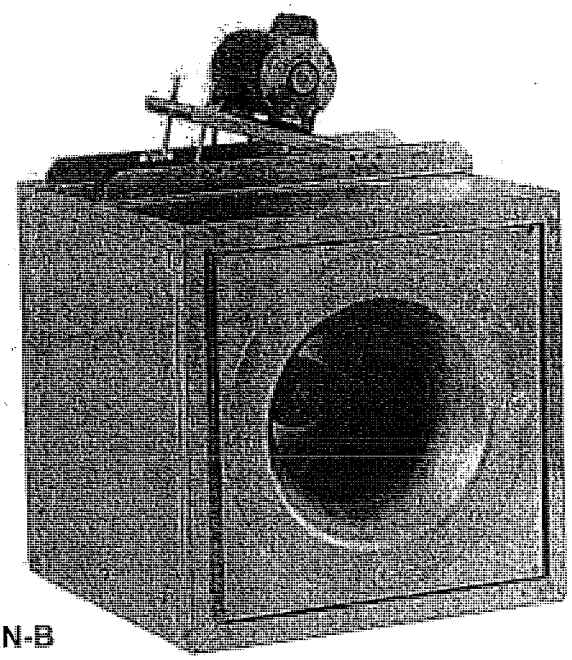

SQN-B

Installation

Motor Installation

To prevent damage to the fan during shipping, motors 5 HP and larger, and extremely heavy motors (cast iron or severe duty) are shipped loose and must be field mounted.

Personal Safety
Disconnect switches are recommended. Place the disconnect switch near the fan in order that the power can be swiftly cut off in case of an emergency, and in order that maintenance personnel are provided complete control of the power source.

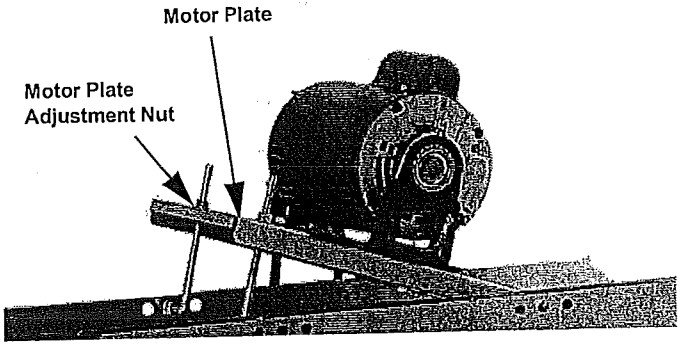

Motor Plate Adjustment

Wiring Diagrams

Single Speed, Single Phase Motor

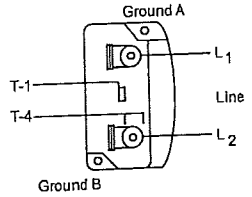

When ground is required, attach to ground A or B with no. 6 thread forming screw. To reverse, interchange T-1 and T-4.

2 Speed, 2 Winding, Single Phase Motor

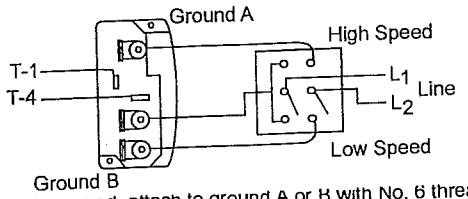

When ground required, attach to ground A or B with No. 6 thread forming screw. To reverse, interchange T-1 and T-4 leads.

Single Speed, Single Phase, Dual Voltage

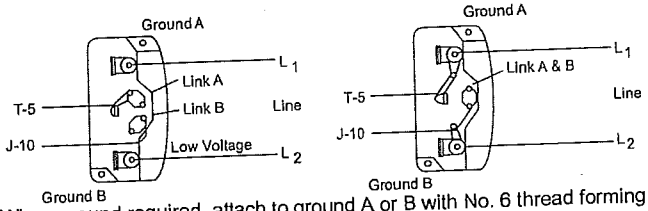

When ground required, attach to ground A or B with No. 6 thread forming screw. To reverse, interchange T-5 and J-10 leads.

Typical Damper Motor Schematic

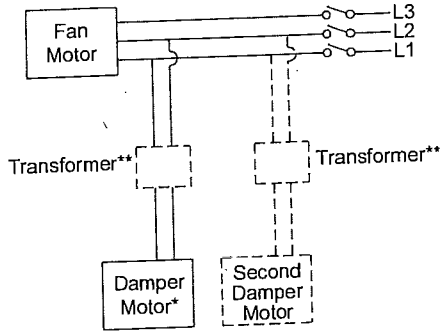

For 3 phase, damper motor voltage should be the same between L_1 and L_2. For single phase application, disregard L_3. *Damper motors may be available in 115, 230 and 460 volt models. The damper motor nameplate voltage should be verified prior to connection. **A transformer may be provided in some installations to correct the damper motor voltage to the specified voltage.

Wiring Diagrams

3 Phase, 9 Lead Motor Y-Connection

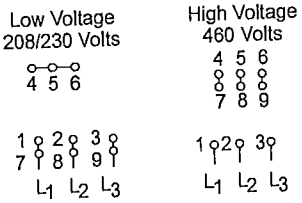

3 Phase, 9 Lead Motor Delta-Connection

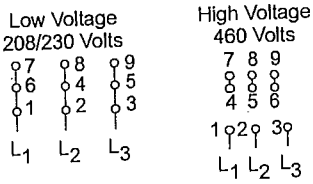

To reverse, interchange any 2 line leads.

2 Speed, 1 Winding, 3 Phase Motor

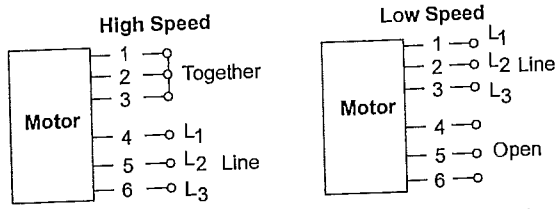

To reverse, interchange any 2 line leads. Motors require magnetic control.

2 Speed, 2 Winding, 3 Phase

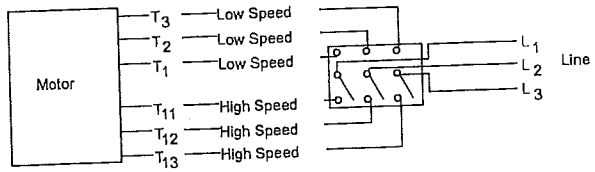

To reverse: High Speed-interchange leads T_{11} and T_{12}. Low Speed-interchange leads T_1 and T_2. Both Speeds-interchange any 2 line leads.

Wiring Installation

All wiring should be in accordance with local ordinances and the National Electrical Code, NFPA 70. Ensure the power supply (voltage, frequency, and current carrying capacity of wires) is in accordance with the motor nameplate. Refer to the *Wiring Diagrams*.

Lock off all power sources before unit is wired to power source.

Direct drive - Wire the electrical box on the blower housing.

Belt drive - The motor can be wired directly since the tor is external to the fan.

Leave enough slack in the wiring to allow for motor movement when adjusting belt tension. Some fractional motors have to be removed in order to make the connection with the terminal box at the end of the motor. To remove motor, remove bolts securing motor base to power assembly. Do not remove motor mounting bolts.

Follow the wiring diagram in the disconnect switch and the wiring diagram provided with the motor. Correctly label the circuit on the main power box and always identify a closed switch to promote safety (i.e., red tape over a closed switch).

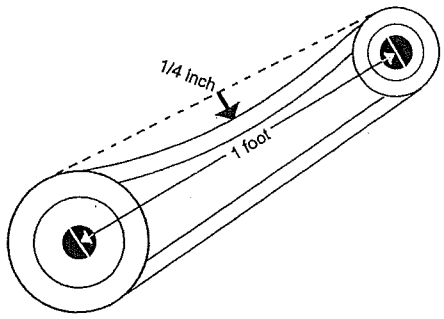

Figure 1

Belt and Pulley Installation

If your fan is a direct drive, proceed to Blower Installation.

Belt tension is determined by the sound the belts make when the fan is first started. Belts will produce a loud squeal which dissipates after the fan is operating at full capacity. If the belt tension is too tight or too loose, lost efficiency and possible damage can occur.

Do not change the pulley pitch diameter to change tension. This will result in a different fan speed.

a. Loosen motor plate adjustment nuts on L-bolts and move motor plate in order that the belts can easily slip into the grooves on the pulleys. Never pry, roll, or force the belts over the rim of the pulley.
b. Adjust the motor plate until proper tension is reached. For proper tension, a deflection of approximately 1/4" per foot of center distance should be obtained by firmly pressing the belt. Refer to *Figure1*.
c. Lock the motor plate adjustment nuts in place.
d. Ensure pulleys are properly aligned. Refer to *Figure* 2.

Tolerance

Center Distance	Maximum Gap
Up thru 12"	1/16"
12" up through 48	1/8"
Over 48"	1/4"

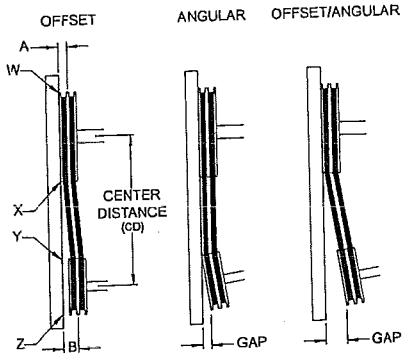

Figure 2

Pulley Alignment

Pulley alignment is adjusted by loosening the motor pulley setscrew and by moving the motor pulley on the motor shaft.

Figure 2 indicates where to measure the allowable gap for the drive alignment tolerance. All contact points (indicated by WXYZ) are to have a gap less than the tolerance shown in the table. When the pulleys are not the same width, the allowable gap must be adjusted by half of the difference in width. *Figure 3* illustrates using a carpenter's square to adjust the position of the motor pulley until the belt is parallel to the longer leg of the square.

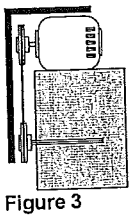

Figure 3

Blower Installation

The blower is shipped with the motor in the 12 o'clock position and the feet are shipped loose.

a. Upon receipt of the fan, remove the eight (8) feet shipped with the fan and ensure the feet are the correct type. Refer to *Figure 4.*
b. Determine how the fan is to be mounted. Refer to *Figure 5.*
c. Remove the 5/16" bolt(s) from the corner of the housing in which the foot is to be attached.
d. Place the foot over the open bolt hole(s) and bolt the foot to the unit. Refer to *Figure 4.*

Foot Mounting Illustrations

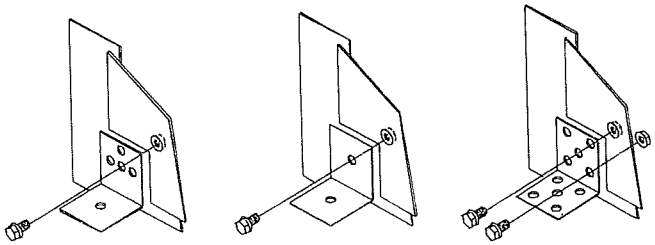

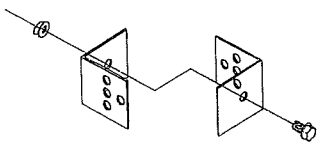

View of A or E Foot Assembly

Figure 4

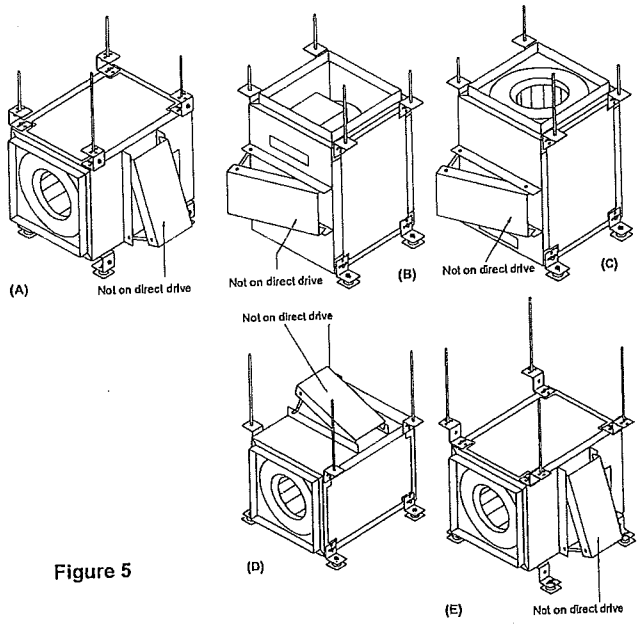

Figure 5

SQN Optional Side Discharge Installation

Upon receiving a SQN for a side discharge installation, please note that the rear discharge block-off panel is installed on the unit and that the correct number of side discharge duct connection collars are provided (4 steel flanges for a single side discharge and 8 for dual).

To install the side discharge duct connection collar, remove the appropriate access door. Install the side discharge duct connection collar using the bolts that were removed with the access door. Then connect the duct work. *See page 5 for examples.*

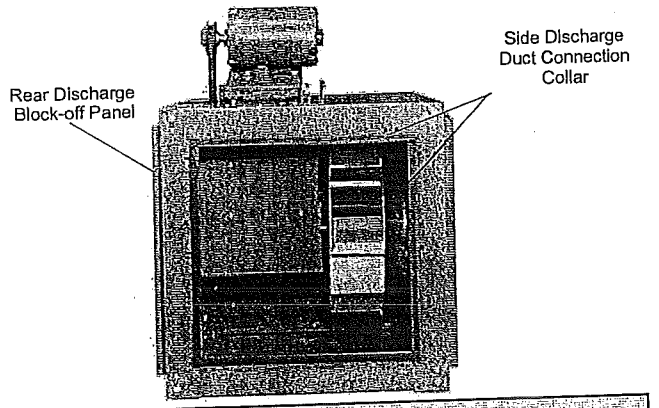

NOTE
Original Loren Cook Company labels must remain with the unit. This may require swapping access doors from one side to the other.

Final Installation Steps

a. Ensure that all accessories are installed.
b. Ensure that the blower is secured to ductwork.
c. Inspect wheel-to-inlet clearance. Ensure wheel does not rub against the inlet.
d. Test the fan to ensure the rotation of the wheel is the same as indicated by the rotation label.
e. Inspect for correct amperage with an ammeter and correct voltage with a voltmeter.

Do not allow the fan to run in the wrong direction. This will overheat the motor and cause serious damage. For 3-phase motors, if the fan is running in the wrong direction, check the control switch. It is possible to interchange two leads at this location so that the fan is operating in the correct direction.

Operation

Pre-Start Checks

a. Lock out all the primary and secondary power sources.
b. Inspect and tighten fasteners and setscrews, particularly fan mounting and bearing fasteners. Refer to *Torque chart*.
c. Inspect belt tension and pulley alignment.
d. Inspect motor wiring.
e. Ensure fan and ductwork are clean and free of debris.
f. Close and secure all access doors.
g. Restore power to the fan.

Recommended Torque for Setscrews/Bolts (IN/LB.)

Setscrews				Hold Down Bolts	
Size	Key Hex Across Flats	Recommended Torque			
		Min.	Max.	Size	Wrench Torque
No.10	3/32"	28	33	3/8"-16	240
1/4"	1/8"	66	80	1/2"-13	600
5/16"	5/32"	126	156	5/8"-11	1200
3/8"	3/16"	228	275	3/4"-10	2100
7/16"	7/32"	29	348	7/8"-9	2040
1/2"	1/4"	42	504		
5/8"	5/16"	92	1104		
3/4"	3/8"	120	1440		

Start Up

Turn the fan on. In variable speed units, set the fan to its lowest speed and inspect for the following:

- Direction of rotation.
- Excessive vibration.
- Unusual noise.
- Bearing noise.
- Improper belt alignment or tension (listen for squealing).
- Improper motor amperage or voltage.

If a problem is discovered, immediately shut the fan off. Lock out all electrical power and check for the cause of the trouble. *See Troubleshooting on page 7.*

Inspection

Inspection of the fan should be conducted at the first **30 minute, 8 hour** and **24 hour** intervals of satisfactory operation. During the inspections, stop the fan and inspect as per the chart below.

30 Minute Interval
Inspect bolts, setscrews, and motor mounting bolts. Adjust and tighten as necessary.

8 Hour Interval
Inspect belt alignment and tension. Adjust and tighten as necessary.

24 Hour Interval
Inspect belt tension. Adjust and tighten as necessary.

Maintenance

Establish a schedule for inspecting all parts of the fan. The frequency of inspection depends on the operating conditions and location of the fan.

Inspect fans exhausting corrosive or contaminated air within the first month of operation. Fans exhausting contaminated air (airborne abrasives) should be inspected every three months.

Yearly inspections are recommended for fans exhausting non-contaminated air.

It is recommended the following inspections be conducted twice per year.

- Inspect bolts and setscrews for tightness. Tighten as necessary. Refer to *Torque chart*.
- Inspect belt wear and alignment. Replace worn belts with new belts and adjust alignment as needed. Refer to *Belt and Pulley Installation*.
- Bearings should be inspected as recommended in the *Conditions Chart*.

Typical Side Discharge Applications

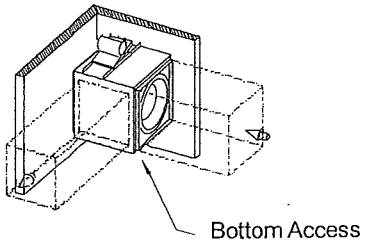

Example 1

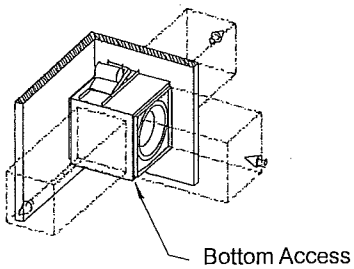

Example 2

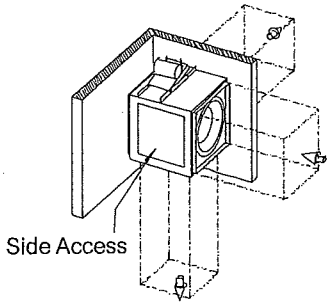

Example 3

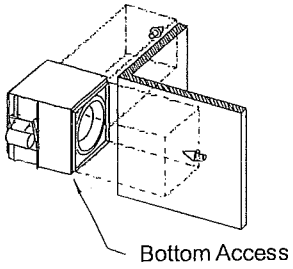

Example 4

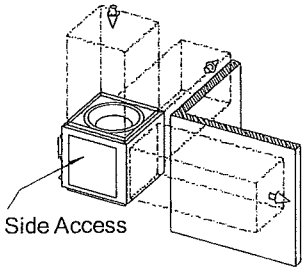

Example 5

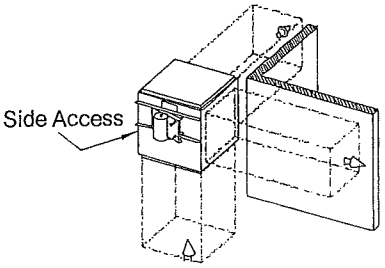

Example 6

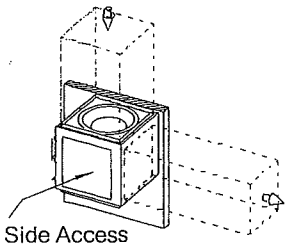

Example 7

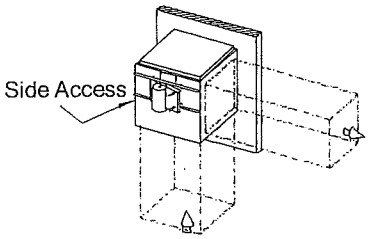

Example 8

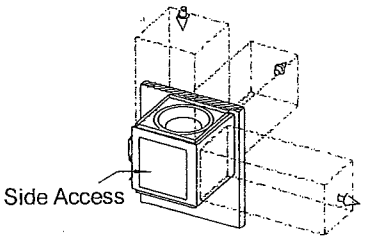

Example 9

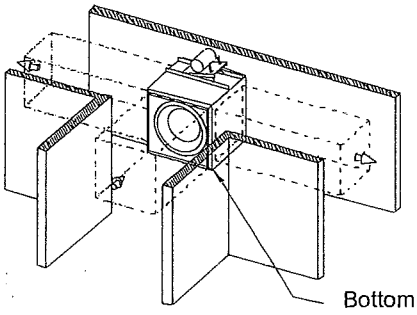

Example 10

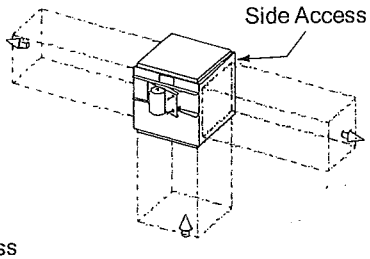

Example 11

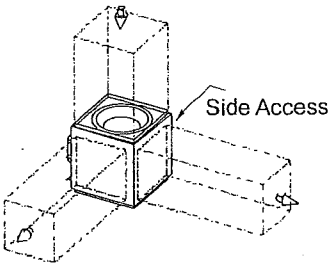

Example 12

- Inspect for cleanliness. Clean exterior surfaces only. Removing dust and grease on motor housing assures proper motor cooling.

Fan Bearings

The fan bearings are provided prelubricated. Any specialized lubrication instructions on fan labels supersedes information provided herein. Bearing grease is a petroleum lubricant in a lithium base conforming to a NLGI #2 consistency. If user desires to utilize another type of lubricant, they take responsibility for flushing bearings and lines, and maintaining a lubricant that is compatible with the installation.

A NLGI #2 grease is a light viscosity, low-torque, rust-inhibiting lubricant that is water resistant. Its temperature range is from -30°F to 200°F and capable of intermittent highs of 250°F.

Bearings should be relubricated in accordance with the condition chart below.

For best results, lubricate the bearing while the fan is in operation. Pump grease in slowly until a slight bead forms around the bearing seals. Excessive grease can damage seal and reduce life through excess contamination and/or loss of lubricant.

In the event that the bearing cannot be seen, use no more than three injections with a hand operated grease gun.

Conditions Chart		
RPM	Temp °F	Greasing Interval
Up to 1000	-30 to 120	6 months
	120 to 200	2 months
1000 to 3000	-30 to 120	3 months
	120 to 200	1 month
Over 3000	-30 to 120	1 month
	120 to 200	2 weeks
Any Speed	< -30	Consult Factory
Any Speed	> 200	1 week

For moist or otherwise contaminated installations; divide the interval by a factor of 3. For vertical shaft installations divide the interval by a factor of 2.

Lubricants

Loren Cook Company uses petroleum lubricant in a lithium base. Other types of grease should not be used unless the bearings and lines have been flushed clean. If another type of grease is used, it should be a lithium-based grease conforming to NLGI grade 2 consistency.

A NLGI grade 2 grease is a light viscosity, low-torque, rust-inhibiting lubricant that is water resistant. Its temperature range is from -30°F to +200°F and capable of intermittent highs of +250°F.

Motor Bearings

Motors are provided with prelubricated bearings. Any lubrication instructions shown on the motor nameplate supersede instructions below.

Direct Drive 1050/1075,1200,1300 &1500 rpm units use a prelubricated sleeve bearing that has a oil saturated wicking material surrounding it. The initial factory lubrication is adequate for up to 10 years of operation under normal conditions. However, it is advisable to add lubricant after 3 years. Use only LIGHT grade mineral oil or SAE 10W oil up to 30 drops. If the unit has been stored for a year or more it is advisable to lubricate as directed above. For units in severe conditions, lubrication intervals should be reduced to half.

Motors without sleeve bearings (as described above) will have grease lubricated ball or roller bearings. Motor bearings without provisions for relubrication will operate up to 10 years under normal conditions with no maintenance. In severe applications, high temperatures or excessive contaminates, it is advisable to have the maintenance department disassemble and lubricate the bearings after 3 years of operation to prevent interruption of service.

For motors with provisions for relubrication, follow intervals of the table below.

Relubrication Intervals						
Service Conditions	NEMA Frame Size					
	Up to and including 184T		213T-365T		404T and larger	
	1800 RPM and less	Over 1800 RPM	1800 RPM and less	Over 1800 RPM	1800 RPM and less	Over 1800 RPM
Standard	3 yrs.	6 months	2 yrs.	6 months	1 yr.	3 months
Severe	1 yr.	3 months	1 yr.	3 months	6 months	1 months

Motors are provided with a polyurea mineral oil NGLI #2 grease. All additions to the motor bearings are to be with a compatable grease such as Exxon Mobil Polyrex EM and Chevron SRI.

The above intervals should be reduced to half for vertical shaft installations.

Motor Services

Should the motor prove defective within a one-year period, contact your local Loren Cook representative or your nearest authorized electric motor service representative.

Changing Fan Speed

All belt driven fans with motors up to and including 5 HP are equipped with variable pitch pulleys.

a. Loosen setscrew on motor pulley.
b. Open or close the groove facing to change the pitch diameter.

Speed Reduction - Open the pulley in order that the belt rests deeper in the groove.

Speed Increase - Close the pulley in order that the belt rests higher in the groove. Ensure RPM limits of the fan and the horsepower limits of the motor are maintained.

c. Retighten pulley setscrew on one of the flat areas of the motor shaft.
d. After the adjustment is made, check for proper belt tension. See the *Belt and Pulley Installation* section.

Maximum RPM

SQN-B Size	Maximum RPM	
	Non Reinforced Wheel	Reinforced Wheel
60	3795	-
70	4006	-
80	3409	-
100	3243	-
120	2867	-
135	2332	-
150	2099	-
165	1833	2107
180	1610	1786
195	1429	1593
210	1277	1399
225	1152	1459
245	1015	1434
270	876	1226
300	837	1024
330	716	962
365	624	786
402	539	683

SQN-HP Size	Maximum RPM	
	Non Reinforced Wheel	Reinforced Wheel
135	2622	-
150	2929	-
165	2635	-
180	2169	-
195	1955	-
210	1781	-
225	1500	1861
245	1185	1773
270	1025	1563
300	980	1204
330	830	1178
365	735	1038
402	630	970

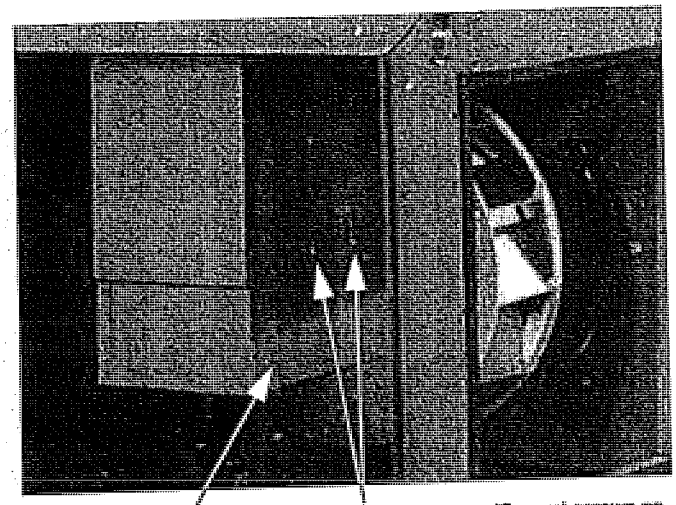

Bearing Cover

Bearing Cover Screws (Several screws on opposite side not shown in photograph.)

Pulley and Belt Replacement

a. Remove pulleys from their respective shafts.
b. Clean the motor and fan shafts.
c. Clean bores of pulleys and coat the bores with heavy oil.
d. Remove grease, rust, or burrs from the pulleys and shafts.
e. Remove burrs from shaft by sanding.
f. Place fan pulley on fan shaft and motor pulley on its shaft.

Do not hammer the pulleys onto the shafts because this may damage the bearings.

g. Tighten in place.
h. Install belts on pulleys and align as described in the *Belt and Pulley Installation* section.

Bearing Replacement

The fan bearings are pillow block ball bearings.

a. Loosen screws on bearing cover.
b. Push bearing cover toward the wheel. As the bearing cover moves toward the wheel it will slide down to reveal the bearings and shaft. Refer to Figure 6.
c. Remove the old bearing.
d. Remove any burrs from the shaft by sanding.
e. Slide new bearings onto the shaft to the desired location and loosely mount bearings onto the bearing support. Bearing bolts and setscrews should be loose enough to allow shaft positioning.
f. Correctly position the wheel and tighten the bearing bolts securely to the bearing support.
g. Align setscrews bearing to bearing and secure tightly to the shaft.

Never tighten both pairs of setscrews before securing bearing mounting bolts. This may damage the shaft.

h. Inspect the wheel position again. If necessary, readjust by loosening the bearing bolts and setscrews and repeat from step e.

Wheel Replacement

a. Drill two 1/4" diameter holes, 180° apart centered approximately between the shaft and the outside diameter of the hub, 3/8" to 1/2" in depth.
b. Tap 1/4" holes to 5/16" thread with a 5/16" hole tap. Do not drill or tap greater than recommended.
c. Screw the puller arms to the full depth of the threads into the tapped holes. Align center of the puller with the center of the shaft. Ensure all setscrews in the hub, normally two, are fully removed.
d. Slowly remove wheel from the shaft.

Recommended Puller

Lisle No. 45000 Sterling Wheel Puller. This puller is available at most automotive parts retail outlets.

Wheel Replacement Components

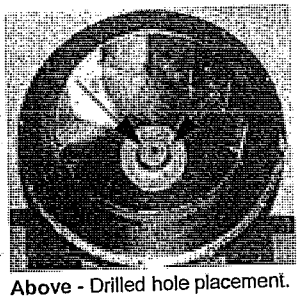

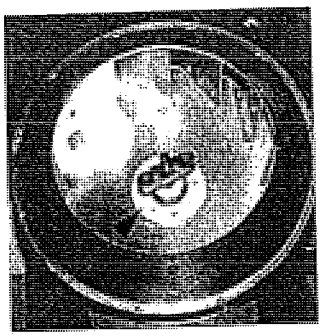

Above - Drilled hole placement.
Right - Wheel puller.

Wheel-to-Inlet Clearance

The correct wheel-to-inlet clearance is critical to proper fan performance. This clearance should be verified before ·itial start-up since rough handling during shipment could ·se a shift in fan components. Refer to wheel/inlet draw-·g for correct overlap.

Adjust the overlap by loosening the wheel hub and moving the wheel along the shaft to obtain the correct value.

A uniform radial gap (space between the edge of the cone and the edge of the inlet) is obtained by loosening the inlet cone bolts and repositioning the inlet cone.

Wheel/Inlet Overlap

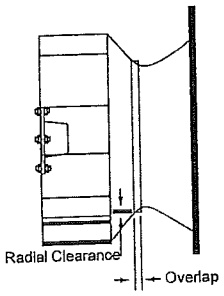

Size	Maximum Overlap
100	5/8"
120	
135	
150	
165	
180	
195	
210	3/4"
225	
245	
270	

Size	Maximum Overlap
300	1"
330	
365	
402	
445	
490	1-1/4"
540	
600	
660	
730	

Troubleshooting

Problem and Potential Cause
Low Capacity or Pressure •Incorrect direction of rotation. Make sure the fan rotates in same direction as the arrows on the motor or belt drive assembly. •Poor fan inlet conditions. There should be a straight clear duct at the inlet. •Improper wheel alignment.
Excessive Vibration and Noise •Damaged or unbalanced wheel. •Belts too loose; worn or oily belts. •Speed too high. •Incorrect direction of rotation. Make sure the fan rotates in same direction as the arrows on the motor or belt drive assembly. •Bearings need lubrication or replacement. •Fan surge.
Overheated Motor •Motor improperly wired. •Incorrect direction of rotation. Make sure the fan rotates in same direction as the arrows on the motor or belt drive assembly. •Cooling air diverted or blocked. •Improper inlet clearance. •Incorrect fan RPMs. •Incorrect voltage.
Overheated Bearings •Improper bearing lubrication •Excessive belt tension.

SQN-B/SQN-HP Parts List

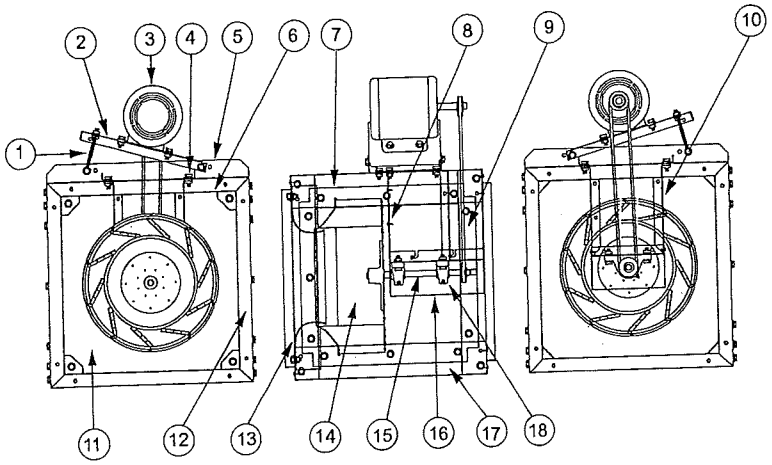

Part No.	Description		
	Sizes 60 - 165	Sizes 180 - 210	Sizes 225 - 402
1	L-Bolt (2)	L-Bolt (2)	L-Bolt (2)
2	Motor Plate (1)	Motor Plate (1)	Motor Plate (1)
3	Motor (1)	Motor (1)	Motor (1)
4	Motor Support Bracket (2)	Motor Support Bracket (2)	Motor Support Bracket (2)
5	Motor Support Rail (2)	Motor Support Rail (3)	Motor Support Rail (2)
6	Housing Panel Motor Side (1)	Housing Panel Motor Side (1)	Housing Panel Motor Side (1)
7	Access Panel (3)	Access Panel (3)	Access Panel (3)
8	Bearing Support Reinforcement Plate (1)	Bearing Support Reinforcement Plate (1)	Bearing Support Reinforcement Plate (2)
9	Belt Cover (1)	Belt Cover (1)	Belt Cover (1)
10	Bearing Support & Bearing Support Leg	Bearing Support & Bearing Support Leg	Bearing Support & Bearing Support Leg
11	Inlet Panel (1)	Inlet Panel (1)	Inlet Panel (1)
12	Housing Frame Support (6)	Housing Frame Support (6)	Housing Frame Support (6)
13	Inlet Cone, Sizes 135-402 (1)	Inlet Cone, Sizes 135-402 (1)	Inlet Cone, Sizes 135-402 (1)
14	Wheel (1)	Wheel (1)	Wheel (1)
15	Shaft (1)	Shaft (1)	Shaft (1)
16	Bearing Cover (1)	Bearing Cover (1)	Bearing Cover (1)
17	Housing Frame Rail (2)	Housing Frame Rail (2)	Housing Frame Rail (2)
18	Bearing (2)	Bearing (2)	Bearing (2)

SQN-B/SQN-HP Side Discharge Parts List

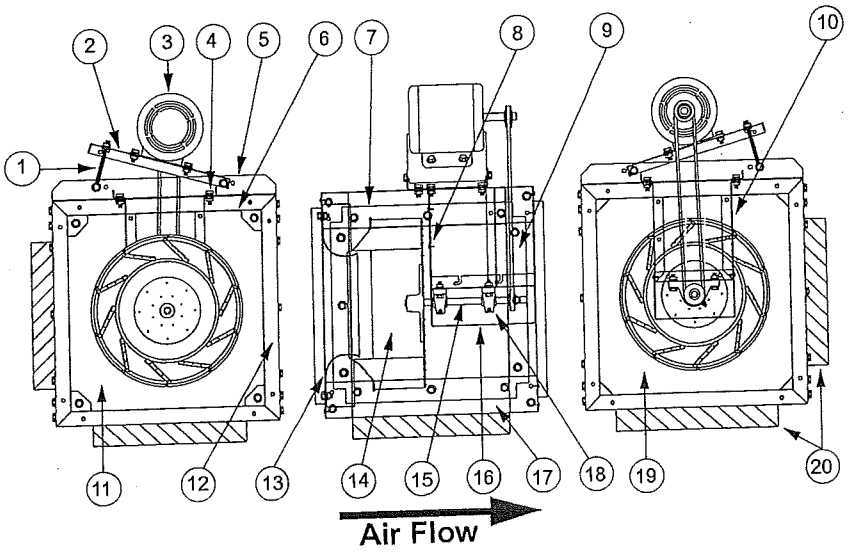

Part No.	Description		
	Sizes 60 - 165	Sizes 180 - 210	Sizes 225 - 402
1	L-Bolt (2)	L-Bolt (2)	L-Bolt (2)
2	Motor Plate (1)	Motor Plate (1)	Motor Plate (1)
3	Motor (1)	Motor (1)	Motor (1)
4	Motor Support Bracket (2)	Motor Support Bracket (2)	Motor Support Bracket (2)
5	Motor Support Rail (2)	Motor Support Rail (3)	Motor Support Rail (2)
6	Housing Panel Motor Side (1)	Housing Panel Motor Side (1)	Housing Panel Motor Side (1)
7	Access Panel (3)	Access Panel (3)	Access Panel (3)
8	Bearing Support Reinforcement Plate (1)	Bearing Support Reinforcement Plate (1)	Bearing Support Reinforcement Plate (2)
9	Belt Cover (1)	Belt Cover (1)	Belt Cover (1)
10	Bearing Support Assembly (1)	Bearing Support Assembly (1)	Bearing Support Assembly (1)
11	Inlet Panel (1)	Inlet Panel (1)	Inlet Panel (1)
12	Housing Frame Support (6)	Housing Frame Support (6)	Housing Frame Support (6)
13	Inlet Cone, Sizes 135 - 402 (1)	Inlet Cone, Sizes 135 - 402 (1)	Inlet Cone, Sizes 135 - 402 (1)
14	Wheel (1)	Wheel (1)	Wheel (1)
15	Shaft (1)	Shaft (1)	Shaft (1)
16	Bearing Cover (1)	Bearing Cover (1)	Bearing Cover (1)
17	Housing Frame Rail (2)	Housing Frame Rail (2)	Housing Frame Rail (2)
18	Bearing (2)	Bearing (2)	Bearing (2)
19	Discharge Cover (1)	Discharge Cover (1)	Discharge Cover (1)
20	Single Side Discharge Flange (4)	Single Side Discharge Flange (4)	Single Side Discharge Flange (4)
	Dual Side Discharge Flange (8)	Dual Side Discharge Flange (8)	Dual Side Discharge Flange (8)

SQN-D Parts List

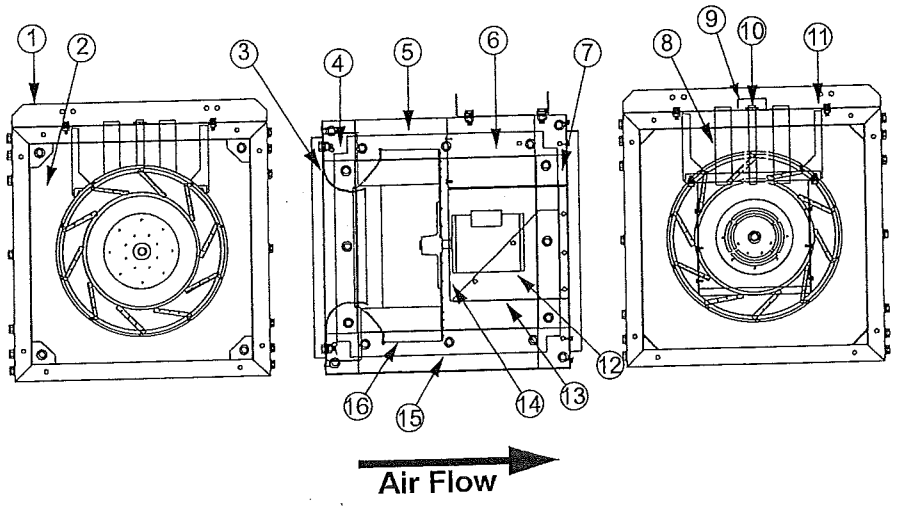

Part No.	Description	Part No.	Description
1	Motor Support Rail (2)	9	Electrical Box
2	Inlet Panel (1)	10	Electrical Conduit (1)
3	Inlet Cone, Sizes 135 - 165 (1)	11	Motor Plate Platform (1)
4	Housing Frame Support (6)	12	Motor (1)
5	Housing Panel Motor Side (1)	13	Motor Cover (1)
6	Access Panel (3)	14	Motor Plate (1)
7	Motor Cover Back Plate (1)	15	Housing Frame Rail (2)
8	Cooling Tube (2)	16	Wheel

SQN-D Side Discharge Parts List

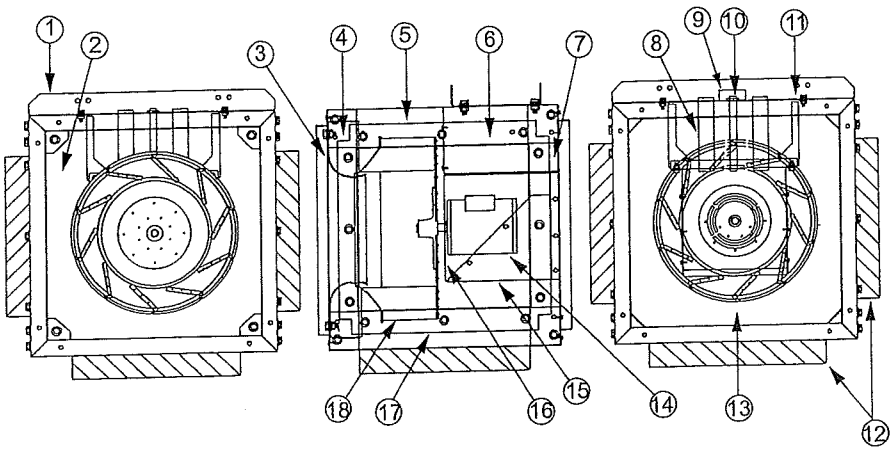

Part No.	Description	Part No.	Description
1	Motor Support Rail (2)	11	Motor Plate Platform (1)
2	Inlet Panel (1)	12	Single Side Discharge Flange (4)
3	Inlet Cone, Sizes 135 - 165 (1)		Dual Side Discharge Flange (8)
4	Housing Frame Support (6)	13	Discharge Cover (1)
5	Housing Panel Motor Side (1)	14	Motor (1)
6	Access Panel (3)	15	Motor Cover (1)
7	Motor Cover Back Plate (1)	16	Motor Plate (1)
8	Cooling Tube (2)	17	Housing Frame Rail (2)
9	Electrical Box	18	Wheel (1)
10	Electrical Conduit (1)		

Limited Warranty

Loren Cook Company warrants that your Loren Cook fan was manufactured free of defects in materials and workmanship, to the extent stated herein. For a period of one (1) year after date of shipment, we will replace any parts found to be defective without charge, except for shipping costs which will be paid by you. This warranty is granted only to the original purchaser placing the fan in service. This warranty is void if the fan or any part thereof has been altered or modified from its original design or has been abused, misused, damaged or is in worn condition or if the fan has been used other than for the uses described in the company manual. This warranty does not cover defects resulting from normal wear and tear. To make a warranty claim, notify Loren Cook Company, General Offices, 2015 East Dale Street, Springfield, Missouri 65803-4637, explaining in writing, in detail, your complaint and referring to the specific model and serial numbers of your fan. Upon receipt by Loren Cook Company of your written complaint, you will be notified, within thirty (30) days of our receipt of your complaint, in writing, as to the manner in which your claim will be handled. If you are entitled to warranty relief, a warranty ljustment will be completed within sixty (60) business days of the receipt of your written complaint by Loren Cook Company. This warranty gives only the original purchaser ›cing the fan in service specifically the right. You may have other legal rights which vary from state to state.

COOK

VA/AVA/AF

Vane Axial Inline Blowers

INSTALLATION, OPERATION, AND MAINTENANCE MANUAL

This publication contains the installation, operation and maintenance instructions for standard units of the *VA/AVA/AF- Vane Axial Inline Blowers.*

- VAD/VAB/VAHB
- AVAD/AVAB
- AFB-C/AFBV-C
- AFB-H/AFBV-H
- AFB-S/AFBV-S
- AFD-C/AFDV-C

Carefully read this publication prior to any installation or maintenance procedure.

Loren Cook catalog, *VA/AVA/AF*, provides additional information describing the equipment, fan performance, available accessories, and specification data.

For additional safety information, refer to AMCA publication 410-96, *Safety Practices for Users and Installers of Industrial and Commercial Fans.*

All of the publications listed above can be obtained from Loren Cook Company by phoning (417) 869-6474, extension 166; by FAX at (417) 832-9431; or by e-mail at info@lorencook.com.

For information on special equipment, contact Loren Cook Company Customer Service Department at (417) 869-6474.

Receiving and Inspection

Carefully inspect the fan and accessories for any damage and shortage immediately upon receipt of the fan.

- Turn the prop by hand to ensure it turns freely and does not bind.
- Record on the *Delivery Receipt* any visible sign of damage.

Handling

Handle your equipment with care. Some fans are provided with lifting lugs or holes for easy handling. Others must be handled using nylon straps or well-padded chains and cables which protect the fan's coating and housing. Spreader bars should be used when lifting large parts.

Axial fans should be lifted by using straps around the fan housing only. DO NOT LIFT AXIAL FANS BY THE MOTOR, MOTOR BASE, PROP OR FLANGES.

WARNING
This unit has rotating parts. Safety precautions should be exercised at all times during installation, operation and maintenance.
ALWAYS disconnect power prior to working on fan.

Storage

If the fan is stored for any length of time prior to installation, completely fill the bearings with grease or moisture-inhibiting oil. Refer to *Lubricants* on page 6. Also, store the fan in its original crate and protect it from dust, debris and the weather.

Outdoor Storage

To maintain good working condition of a Vane Axial when it is stored outdoors, or on a construction site, follow the additional steps below.

- Cover the inlet and outlet, and belt tunnel opening to prevent the accumulation of dirt and moisture in the housing.
- Periodically rotate the prop and operate dampers (if supplied) to keep a coating of grease on all internal bearing parts.
- Periodically inspect the unit to prevent damaging conditions.

Personal Safety
Disconnect switches are recommended. Place the disconnect switch near the fan in order that the power can be swiftly cut off in case of an emergency, and in order that maintenance personnel are provided complete control of the power source.

Installation

To prevent damage to the fan during shipping, motors 25 HP and larger, and extremely heavy motors (cast iron or severe duty) are shipped loose and must be field mounted by bolting the motor on the motor mounting plate in the existing mounting slots.

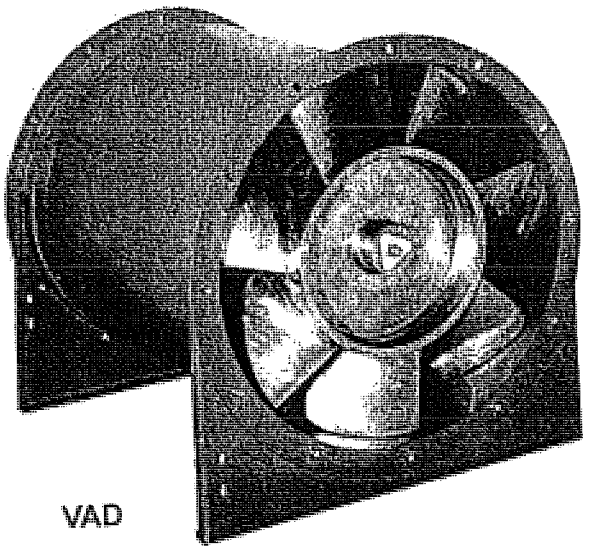

VAD

Note: Extreme vibration is a serious problem that may cause structural and mechanical failure. To help prevent vibration and noise from being transferred to the building, isolators are recommended.

Isolation Installation

Floor Mounted Spring Isolators

a. Mount fan and motor on unitary base (if supplied).
b. Elevate fan (or isolation base) to operating height and insert blocks to hold in position.
c. Position isolators under the fan and vertically align by inserting leveling bolt through mounting holes in the fan or the base. The isolator must be installed on a level surface.
d. Adjust the isolators by turning the leveling nut counter clockwise several turns at a time alternately on each isolator until the fan weight is transferred onto the isolators and the fan raises uniformly off the blocks. Then remove the blocks.
e. Turn lock nut onto leveling bolt and secure firmly in place against the top of the mounting flange or frame.
f. Secure isolators to mounting surface.

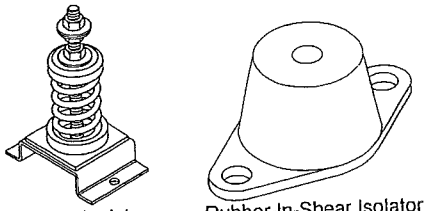

Spring Isolator Rubber-In-Shear Isolator

Figure 1 -Floor Mount Isolators

Floor Mounted Rubber-In-Shear (RIS) Isolators

a. Mount fan and motor on a unitary isolation base (if supplied).
b. Elevate fan to provide room to insert isolators between the fan and foundation and block in position.
c. Position isolators under fan and secure bolts.
d. Remove blocks and allow fan to rest on floor. Isolators must be installed on a level surface (leveling should not be required).
e. Secure isolators to mounting surface.

Ceiling Mounted Spring and Rubber-in-Shear (RIS) Isolators

a. Elevate fan to operating height and brace.
b. Attach threaded rod to overhead support structure directly above each mounting hole. Rod should extend to within a few feet of fan.
c. Attach isolator to end of threaded rod using a nut on each side of isolator bracket.
d. Insert another section of threaded rod through the fan mounting hole and isolator.
e. Attach two nuts to threaded rod in isolator.
f. Place adjusting nut and locking nut on threaded rod near fan mounting bracket.
g. Alternately rotate adjusting nut at each mounting location until the fan weight is uniformly transferred to the isolators. Remove bracing.

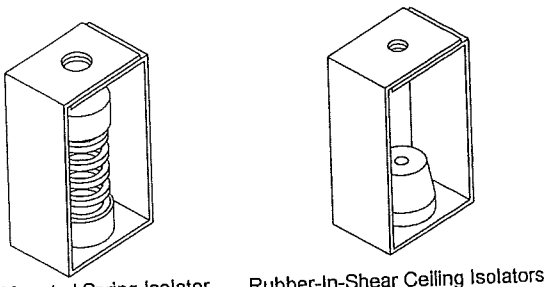

Ceiling Mounted Spring Isolator Rubber-In-Shear Ceiling Isolators

Figure 2 - Ceiling Mount Isolators

Duct Installation

Efficient fan performance relies on the proper installation of inlet and discharge ducts. Be sure your fan conforms to the guidelines below.

Non-Ducted Inlet Clearance

If your fan has an open inlet (no duct work), the fan must be placed one fan wheel diameter away from walls and bulkheads.

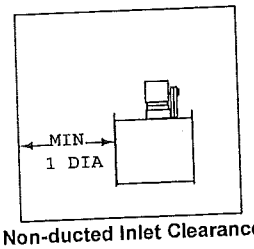

Non-ducted Inlet Clearance

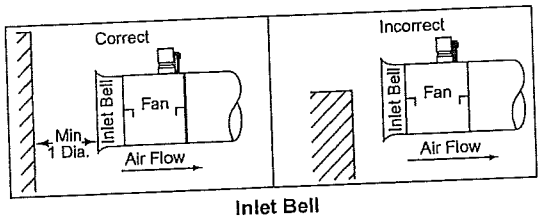

Inlet Bell

Free Discharge

Avoid a free discharge into the plenum. This will result in lost efficiency because it doesn't allow for a static regain.

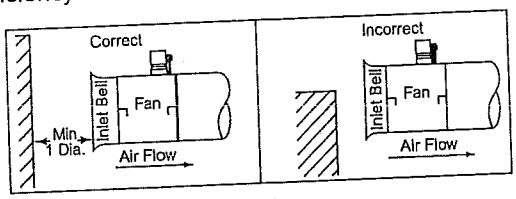

Free Discharge

Inlet Duct Turns

For ducted inlets, allow at least 3 fan wheel diameters between duct turns or elbows and the fan inlet.

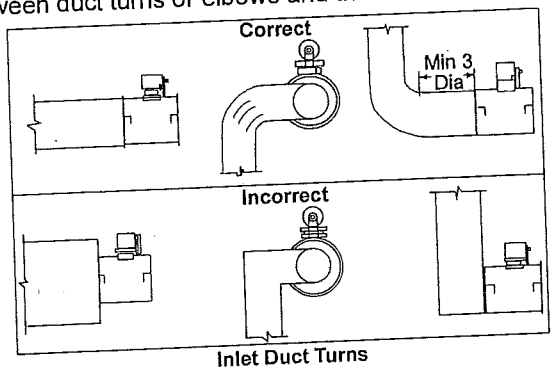

Inlet Duct Turns

Discharge Duct Turns

When possible, allow 3 duct diameters between duct turns or elbows and the fan outlet. Refer to the drawings at the top of page 3.

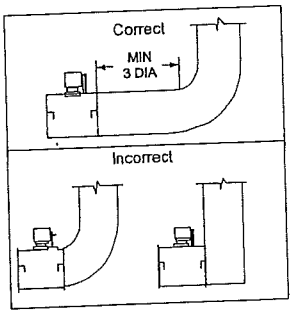

Discharge Duct Turns

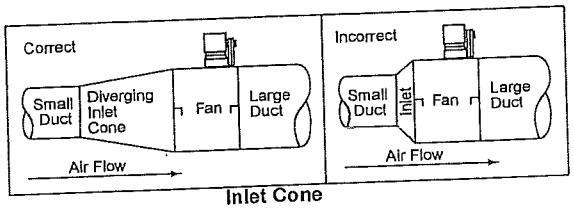

Inlet Cone

Belt and Pulley Installation

Belt tension is determined by the sound the belts make when the fan is first started. Belts will produce a loud squeal which dissipates after the fan is operating at full capacity. If the belt tension is too tight or too loose, lost efficiency and possible damage can occur.

Do not change the pulley pitch diameter to change tension. This will result in a different fan speed.

a. Loosen motor plate adjustment bolts and move motor plate in order that the belts can easily slip into the grooves on the pulleys. Never pry, roll, or force the belts over the rim of the pulley.
b. Adjust the motor plate until proper tension is reached. For proper tension, a deflection of approximately 1/4" per foot of center distance should be obtained by firmly pressing the belt. Refer to *Figure 3*.
c. Lock the motor plate adjustment nuts in place.
d. Ensure pulleys are properly aligned. Refer to *Figure 4*.

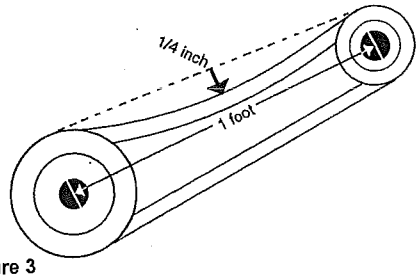

Figure 3

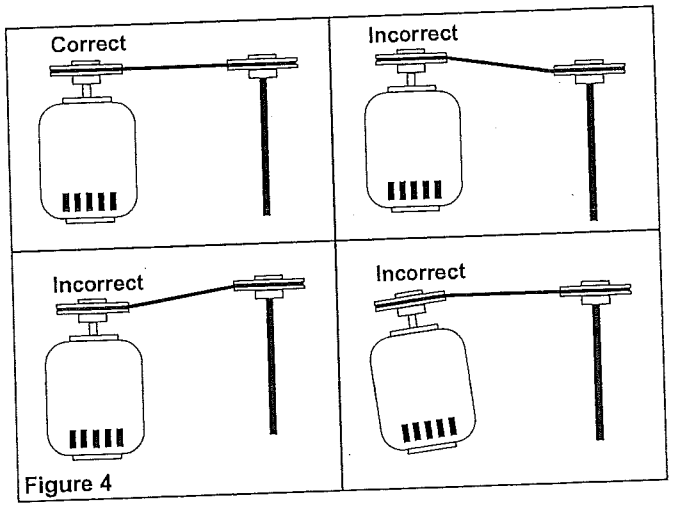

Figure 4

Pulley Alignment

Pulley alignment is adjusted by loosening the motor pulley setscrew and by moving the motor pulley on the motor shaft or by moving the entire motor along the motor mounting bracket.

Figure 4 illustrates correct and incorrect pulley alignment. A recommended method of inspecting the pulley alignment is shown in *Figure 5*. With the shorter leg of a carpenter's square or other straight edge lying along the case of the motor, adjust the position of the motor pulley (or the motor until the longer leg of the square is parallel to the belt.

Wiring Installation

All wiring should be in accordance with local ordinances and the National Electrical Code, NFPA 70. Ensure the power supply (voltage, frequency, and current carrying capacity of wires) is in accordance with the motor nameplate.

Lock off all power sources before unit is wired to power source.

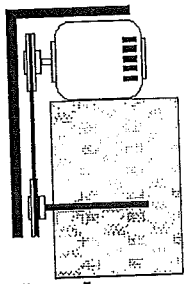

Figure 5

Leave enough slack in the wiring to allow for motor movement when adjusting belt tension. Some fractional motors have to be removed in order to make the connection with the terminal box at the end of the motor. To remove motor, remove bolts securing motor base to power assembly. Do not remove motor mounting bolts.

Follow the wiring diagram in the disconnect switch and the wiring diagram provided with the motor. Correctly label the circuit on the main power box and always identify a closed switch to promote safety (i.e., red tape over a closed switch).

Wiring Diagrams

Single Speed, Single Phase Motor

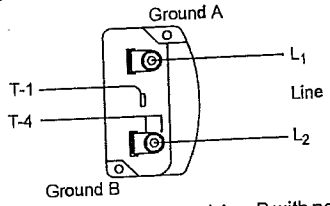

When ground is required, attach to ground A or B with no. 6 thread forming screw. To reverse, interchange T-1 and T-4.

2 Speed, 2 Winding, Single Phase Motor

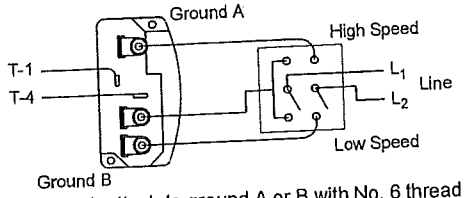

When ground required, attach to ground A or B with No. 6 thread forming screw. To reverse, interchange T-1 and T-4 leads.

Single Speed, Single Phase, Dual Voltage

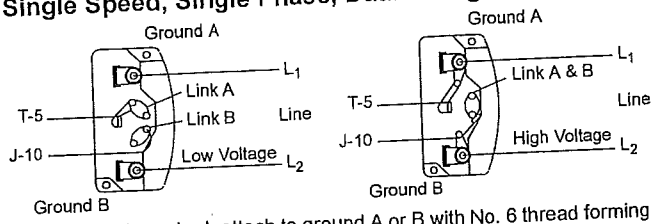

When ground required, attach to ground A or B with No. 6 thread forming screw. To reverse, interchange T-5 and J-10 leads.

Typical Fan Motor/Damper Motor Schematic

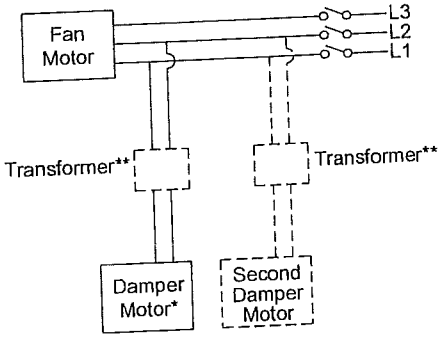

For 3 phase, damper motor voltage should be the same between L_1 and L_2. For single phase application, disregard L_3. *Damper motors may be available in 115, 230 and 460 volt models. The damper motor nameplate voltage should be verified prior to connection. ** A transformer may be provided in some installations to correct the damper motor voltage to the specified voltage.

Wiring Diagrams

3 Phase, 9 Lead Motor

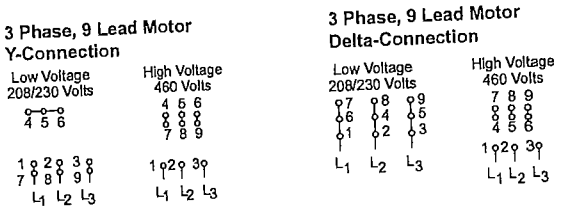

To reverse, interchange any 2 line leads.

2 Speed, 1 Winding, 3 Phase Motor

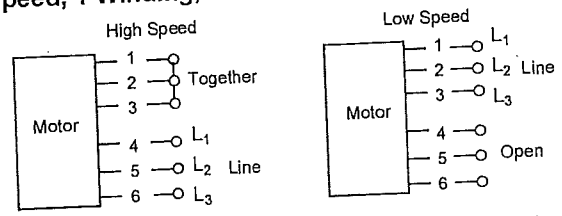

To reverse, interchange any 2 line leads. Motors require magnetic control.

2 Speed, 2 Winding, 3 Phase

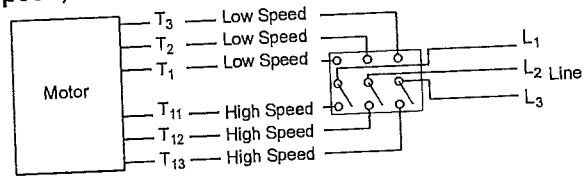

To reverse: High Speed-interchange leads T_{11} and T_{12}.
Low Speed-interchange leads T_1 and T_2. Both Speeds-interchange any 2 line leads.

Prop Concerns

Instructions for adjusting blade angle setting on adjustable pitch Vane Axial Inline Blowers (AVA).

Note: Verify that the fan at the new pitch does not operate at a critical speed (RPM), see page 7.

Warning: The maximum safe blade angle setting for this fan is shown on the decal located inside the hub cover.

a. Disconnect power supply.

b. Remove hub cover.

c. Placing a bubble protractor on the flat machined surface on the discharge side of the hub, take an initial reading, when setting the blade to the desired angle, (no greater than 40°) remember to allow for the angle at which the fan is installed, as indicated by the is initial reading.

d. Adjust each blade individually as follows (note that one person should hold and adjust the blade while another tightens the nuts).

e. Replace hub cover.

f. Reconnect power supply.

1. Place blade in 3 o'clock or 9 o'clock position.

2. Loosen retaining nut on blade bolt.

3. Postition bubble protractor on the face (discharge side) of the blade at the indicated line. If the line is not visible, position protractor on a line perpendicular to the blade center line, and 30% of the wheel radius in from the tip on 39", 49", 63" and 79" fans (22% On 35", 44", 55" and 71" fans).

4. Set blade to desired angle, correcting for angle of installation.

5. Tighten nut so that blade is snug.

6. Recheck blade angle. If blade has shifted, tap blade near hub with soft mallet to correct.

7. Tighten nut to tabulate torque:

Bolt Size	Torque (Ft. Lbs.)	
	Minimum	Maximum
5/8"	40	110
3/4"	140	190
7/8"	265	350
1"	450	550

8. Rotate wheel to bring next blade into same position and repeat steps 1-8 until all blades are adjusted.

AVA Critical Fan Speed (The AVA should not operate between the high and low RPM.)

Fan Size	Blade Angle	Fan RPM Low	Fan RPM High
35	10	600	615
		900	925
		1820	1865
	13	615	630
		920	945
		1860	1910
	16	625	645
		940	965
		1895	1950
	19	635	655
		955	980
		1925	1980
	22	645	660
		965	995
		1950	2005
	25	650	670
		975	1005
		1970	2025
	28	655	675
		985	1010
		1980	2040
	31	655	675
		985	1015
		1990	2045
	34	660	675
		990	1015
		1995	2045
	37	660	675
		990	1010
		1995	2040
	40	655	670
		985	1005
		1990	2030

Fan Size	Blade Angle	Fan RPM Low	Fan RPM High
39	10	370	385
		565	580
		1135	1165
	13	375	390
		570	585
		1150	1180
	16	380	395
		575	590
		1160	1195
	19	385	400
		580	600
		1175	1210
	22	390	405
		585	605
		1185	1220
	25	390	410
		590	610
		1195	1230
	28	395	410
		595	615
		1205	1240
	31	400	415
		600	620
		1215	1250
	34	400	420
		605	625
		1220	1250
	37	405	420
		610	625
		1225	1250
	40	410	420
		615	625
		1230	1245

Fan Size	Blade Angle	Fan RPM Low	Fan RPM High
44	10	525	535
		790	800
		1590	1615
	13	525	535
		790	805
		1595	1620
	16	795	805
		530	535
		1600	1625
	19	795	810
		530	540
		1605	1630
	22	530	540
		800	810
		1615	1635
	25	535	545
		805	815
		1620	1645
	28	535	545
		805	820
		1625	1650
	31	540	550
		810	825
		1635	1660
	34	540	550
		815	825
		1640	1670
	37	545	555
		815	830
		1650	1675
	40	545	555
		820	835
		1655	1685

Fan Size	Blade Angle	Fan RPM Low	Fan RPM High
49	10	315	320
		460	470
		935	950
	13	320	325
		465	475
		940	955
	16	320	325
		465	475
		945	960
	19	320	325
		470	480
		950	970
	22	320	325
		470	480
		955	975
	25	320	325
		475	485
		960	980
	28	325	330
		475	490
		970	985
	31	325	330
		480	495
		975	990
	34	325	335
		485	500
		980	1000
	37	325	335
		485	500
		985	1005
	40	325	340
		490	500
		995	1010

Fan Size	Blade Angle	Fan RPM Low	Fan RPM High
57	10	330	340
		500	510
		1005	1025
	13	335	345
		510	520
		1015	1035
	16	340	350
		520	530
		1020	1045
	19	340	350
		520	535
		1025	1050
	22	340	350
		520	535
		1035	1060
	25	340	350
		525	540
		1040	1065
	28	345	355
		525	540
		1050	1070
	31	345	355
		525	540
		1055	1070
	34	350	360
		525	540
		1060	1075
	37	350	360
		525	540
		1065	1080
	40	350	360
		525	540
		1070	1085

Fan Size	Blade Angle	Fan RPM Low	Fan RPM High
63	10	215	225
		325	340
		660	680
	13	220	230
		330	340
		665	680
	16	220	230
		330	345
		665	685
	19	220	230
		330	345
		670	685
	22	220	230
		330	345
		670	690
	25	225	235
		330	350
		675	695
	28	225	235
		335	350
		675	700
	31	225	235
		335	350
		680	700
	34	225	235
		340	350
		685	700
	37	225	235
		340	350
		690	705
	40	225	235
		340	350
		695	705

Fan Size	Blade Angle	Fan RPM Low	Fan RPM High
71	10	250	265
		370	400
		750	805
	13	250	265
		375	400
		755	810
	16	250	270
		380	400
		760	810
	19	255	270
		380	405
		765	815
	22	255	270
		385	405
		770	820
	25	255	270
		385	405
		775	820
	28	260	270
		385	410
		780	825
	31	260	275
		390	410
		785	825
	34	260	275
		390	410
		790	830
	37	260	275
		395	410
		795	830
	40	265	275
		395	415
		795	835

Fan Size	Blade Angle	Fan RPM Low	Fan RPM High
79	10	250	265
		370	400
		750	805
	13	250	265
		375	400
		755	810
	16	250	270
		380	400
		760	810
	19	255	270
		380	405
		765	815
	22	255	270
		385	405
		770	820
	25	255	270
		385	405
		775	820
	28	260	270
		385	410
		780	825
	31	260	275
		390	410
		785	825
	34	260	275
		390	410
		790	830
	37	260	275
		395	410
		795	830
	40	265	275
		395	415
		795	835

Personal Safety

Disconnect switches are recommended. Place the disconnect switch near the fan in order that the power can be swiftly cut off in case of an emergency. Also, in order that maintenance personnel are provided complete control of the power source.

Prop Rotation

Test the fan to ensure the rotation of the wheel is the same as indicated by the arrow marked Rotation.

115 and 230 Single Phase Motors

Fan wheel rotation is set correctly at the factory. Changing the rotation of this type of motor should only be attempted by a qualified electrician.

208, 230, and 460, 3 Phase Motors

These motors are electrically reversible by switching two of the supply leads. For this reason, the rotation of the fan cannot be restricted to one direction at the factory. See Wiring Diagrams for specific information on reversing wheel direction.

Do not allow the fan to run in the wrong direction. This will overheat the motor and cause serious damage. For 3-phase motors, if the fan is running in the wrong direction, check the control switch. It is possible to interchange two leads at this location so that the fan is operating in the correct direction.

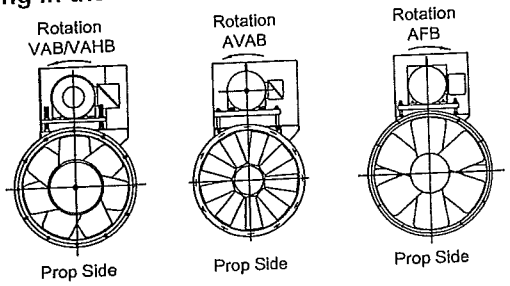

Final Installation Steps

a. Inspect fasteners and setscrews, particularly fan mounting and bearing fasteners, and tighten according to the recommended torque shown in the table *Recommended Torque for Setscrews/Bolts*.
b. Inspect for correct voltage with voltmeter.
c. Ensure all accessories are installed.

Operation

Pre-Start Checks

a. Lock out all the primary and secondary power sources.
b. Ensure fasteners and setscrews, particularly those used for mounting the fan, are tightened.
c. Inspect belt tension and pulley alignment.
d. Inspect motor wiring.
e. Ensure belt touches only the pulley.
f. Ensure fan and ductwork are clean and free of debris.
g. Inspect prop-to-inlet clearance. The correct prop-to-inlet clearance is critical to proper fan performance.
h. Close and secure all access doors.
i. Restore power to the fan.

Start Up

Turn the fan on. In variable speed units, set the fan to its lowest speed and inspect for the following:

- Direction of rotation.
- Excessive vibration.
- Unusual noise.
- Bearing noise.
- Improper belt alignment or tension (listen for squealing).
- Improper motor amperage or voltage.

Recommended Torque for Setscrews/Bolts

Setscrews				Hold Down Bolts	
Size	Key Hex Across Flats	Recommended Torque Inch-lbs.			
		Min.	Max.	Size	Wrench Torque (inch-lbs)
No.10	3/32"	28	33	3/8"-16	240
1/4"	1/8"	66	80	1/2"-13	600
5/16"	5/32"	126	156	5/8"-11	1200
3/8"	3/16"	228	275	3/4"-10	2100
7/16"	7/32"	29	348	7/8"-9	2040
1/2"	1/4"	42	504	-	-
5/8"	5/16"	92	1104		
3/4"	3/8"	120	1440		

If a problem is discovered, immediately shut the fan off. Lock out all electrical power and check for the cause of the trouble. See Troubleshooting.

Inspection

Inspection of the fan should be conducted at the first **30 minute, 8 hour** and **24 hour** intervals of satisfactory operation. During the inspections, stop the fan and inspect as per the *Conditions Chart*.

30 Minute Interval

Inspect bolts, setscrews, and motor mounting bolts. Adjust and tighten as necessary.

8 Hour Interval

Inspect belt alignment and tension. Adjust and tighten as necessary.

24 Hour Interval

Inspect belt tension. Adjust and tighten as necessary.

Maintenance

Establish a schedule for inspecting all parts of the fan. The frequency of inspection depends on the operating conditions and location of the fan.

Inspect fans exhausting corrosive or contaminated air within the first month of operation. Fans exhausting contaminated air (airborne abrasives) should be inspected every three months.

Regular inspections are recommended for fans exhausting non-contaminated air.

It is recommended the following inspection be conducted twice per year.

- Inspect bolts and setscrews for tightness. Tighten as necessary.
- Inspect belt wear and alignment. Replace worn belts with new belts and adjust alignment as needed. Refer to *Belt and Pulley Installation*, page 3.
- Bearings should be inspected as recommended in the *Conditions Chart* on page 6.

- Inspect springs and rubber isolators for deterioration and replace as needed.
- Inspect for cleanliness. Clean exterior surfaces only. Removing dust and grease on motor housing assures proper motor cooling. Removing dirt from the wheel and housing prevent imbalance and damage. housing prevent imbalance and damage.

Lubricants

Loren Cook Company uses petroleum lubricant in a lithium base. Other types of grease should not be used unless the bearings and lines have been flushed clean. If another type of grease is used, it should be a lithium-based grease conforming to NLGI grade 2 consistency.

A NLGI grade 2 grease is a light viscosity, low-torque, rust-inhibiting lubricant that is water resistant. Its temperature range is from -30°F to +200°F and capable of intermittent highs of +250°F. For temperatures above 250° Mobiltemp SHC 32 is recommended.

Motor Bearings

Motor bearings are pre-lubricated and sealed. Under normal conditions they will not require further maintenance for a period of ten years. However, it is advisable to have your maintenance department remove and disassemble the motor, and lubricate the bearings after three years of operation in excessive heat and or in a contaminated airstream consisting of airborne abrasives.

Fan Bearings

Vane Axial bearings are lubricated through a grease fitting on the exterior of the fan housing and should be lubricated by the schedule, *Conditions Chart.*

Use no more than three injections with a hand-operated grease gun.

Conditions Chart

RPM	Temperature	Fan Status	Greasing Interval
100	Up to 120°F	Clean	6 to 12 months
500	Up to 150°F	Clean	2 to 6 months
1000	Up to 210°F	Clean	2 weeks to 2 months
1500	Over 210°F	Clean	Weekly
Any Speed	Up to 150°F	Dirty	1 week to 1 month
Any Speed	Over 150°F	Dirty	Daily to 2 weeks
Any Speed	Any Temperature	Very Dirty	Daily to 2 weeks
Any Speed	Any Temperature	Extreme Conditions	Daily to 2 weeks

Motor Services

Should the motor prove defective within a one-year period, contact your local Loren Cook representative or your nearest authorized electric motor service representative.

Changing Shaft Speed

All belt driven AF fans with motors up to and including 5 HP are equipped with variable pitch pulleys. To change the fan speed, perform the following:

a. Loosen setscrew on driver (motor) pulley and remove key, if equipped.
b. Turn the pulley rim to open or close the groove facing. If the pulley has multiple grooves, all must be adjusted to the same width.
c. After adjustment, inspect for proper belt tension.

Speed Reduction

Open the pulley in order that the belt rides deeper in the groove (smaller pitch diameter).

Speed Increase

Close the pulley in order that the belt rides higher in the groove (larger pitch diameter). Ensure that the RPM limits of the fan and the horsepower limits of the motor are maintained.

The AVAB and VAB have standard fixed pitch sheaves. To change speeds, consult factory.

Pulley and Belt Replacement

a. Remove pulleys from their respective shafts.
b. Clean the motor and fan shafts.
c. Clean bores of pulleys and coat the bores with heavy oil.
d. Remove grease, rust, or burrs from the pulleys and shafts.
e. Remove burrs from shaft by sanding.
f. Place fan pulley on fan shaft and motor pulley on its shaft. Damage to the pulleys can occur when excessive force is used in placing the pulleys on their respective shafts.
g. Tighten in place.
h. Install belts on pulleys and align as described in the *Belt and Pulley Installation* section.

Bearing Replacement

The fan bearings are pillow block ball bearings.

a. Loosen and remove belts by lowering motor mounting plate with the four adjusting nuts.
b. Remove the bearing cover. ***Do not remove fan sheave yet.***
c. Remove prop by loosening setscrews and retaining bolts and sliding off shaft.
d. Record the location of the fan sheave from end of shaft, and remove the sheave.
e. Record the distance from the bearing to the end of the shaft.
f. Loosen setscrews on bearings and remove shaft.
g. Remove bearings and replace with new bearings.
h. Slide shaft through bearings until shaft protrudes the same amount as original shaft. Tighten setscrews.
i. Replace fan sheave in original location.
j. Replace prop but do not tighten yet.
k. Slide prop on shaft and center prop.
l. Replace and tighten belts.
m. Test run the fan.
n. Re-tighten setscrews on bearings, sheave, and prop. Recheck belt tension and adjust as needed.
o. Replace bearing cover.

Prop Adjustment

The AVA prop pitch is adjustable. Consult factory for procedure.

VAD Parts List

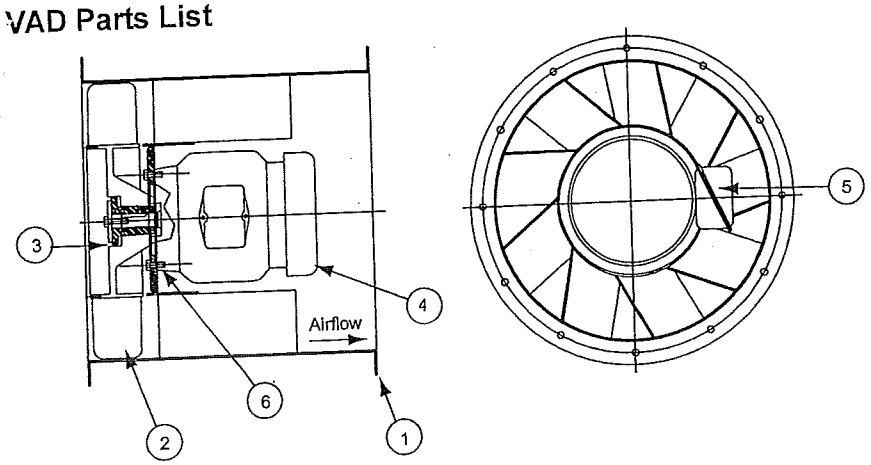

Item No.	Description
1	Drum Weldment
2	Propeller Fixed Pitch
3	Prop Bushing
4	Motor
5	Wiring Box
6	Motor Mounting Bolts

\B Parts List

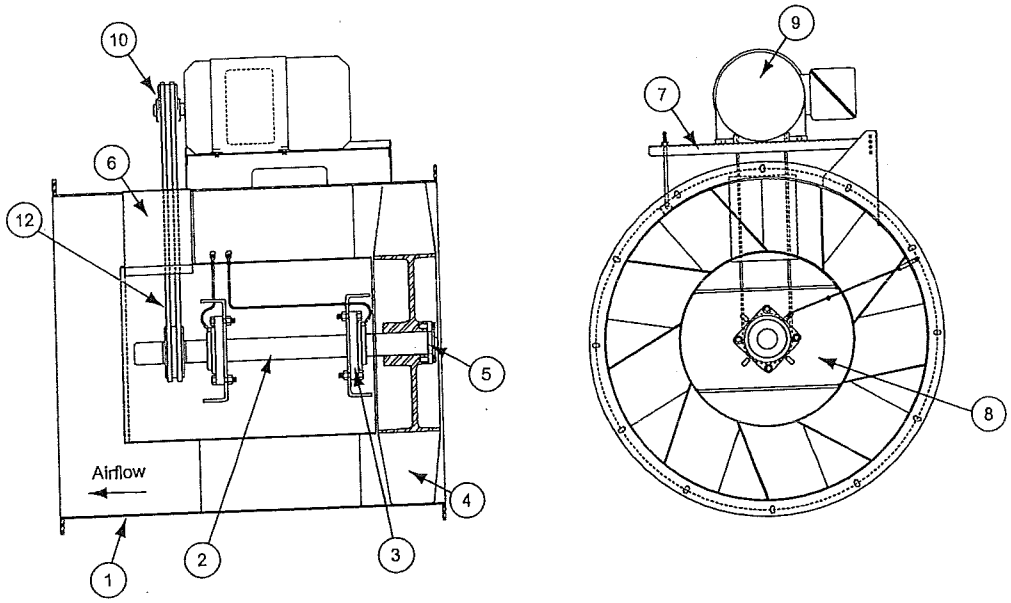

Item No.	Description
1	Drum Weldment
2	Shaft
3	Bearing
4	Prop
5	Prop Bushing
6	Belt Tunnel
7	Motor Plate
8	Inner Drum Nose
9	Motor
10	Drive Sheave
11	Driven Sheave
12	Belt

VAHB Parts List

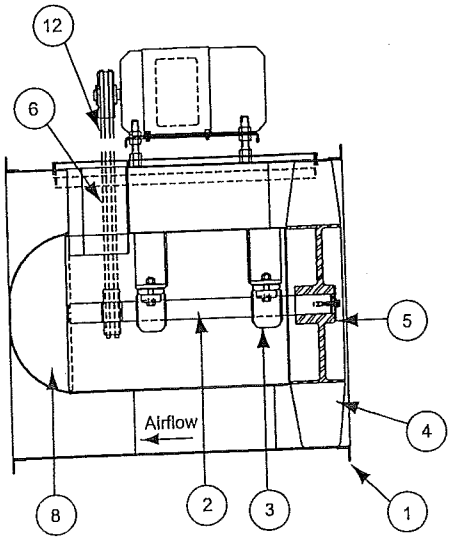

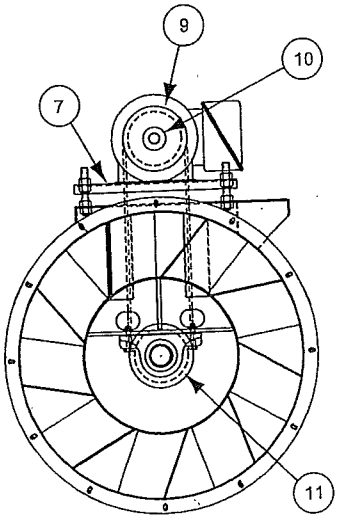

Item No.	Description
1	Drum Weldment
2	Shaft
3	Bearing
4	Prop
5	Prop Bushing
6	Belt Tunnel (2)
7	Motor Plate
8	Inner Drum Nose
9	Motor
10	Drive Sheave
11	Driven Sheave
12	Belt

AVAD Parts List

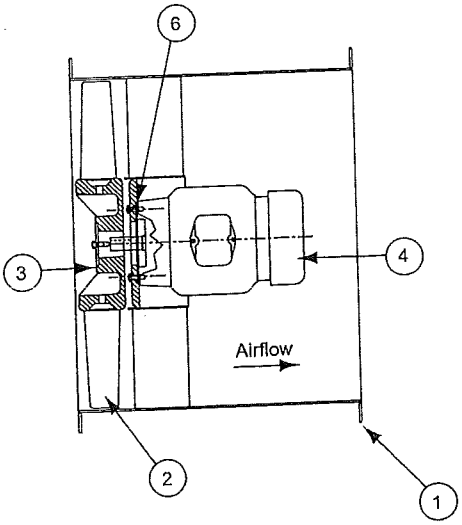

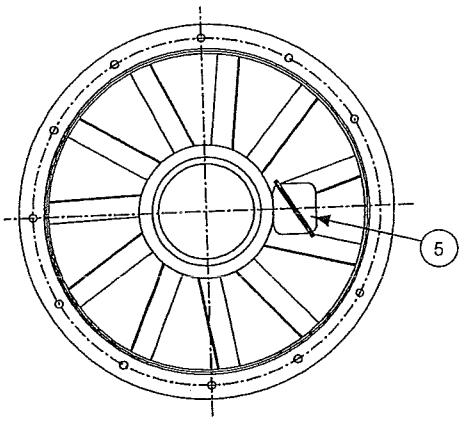

Item No.	Description
1	Drum Weldment
2	Prop
3	Prop Bushing
4	Motor
5	Wiring Box
6	Motor Mounting Bolts

AVAB Parts List

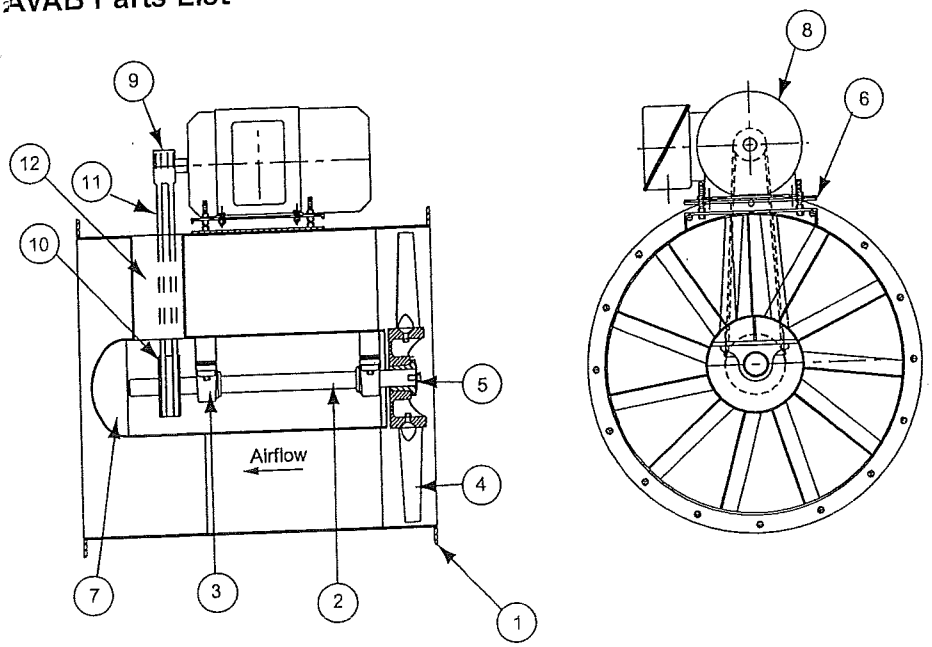

Item No.	Description
1	Drum Weldment
2	Shaft
3	Bearing
4	Prop
5	Prop Bushing
6	Motor Plate
7	Inner Drum Nose
8	Motor
9	Drive Sheave
10	Driven Sheave
11	Belt
12	Belt Tunnel (2)

TB Parts List

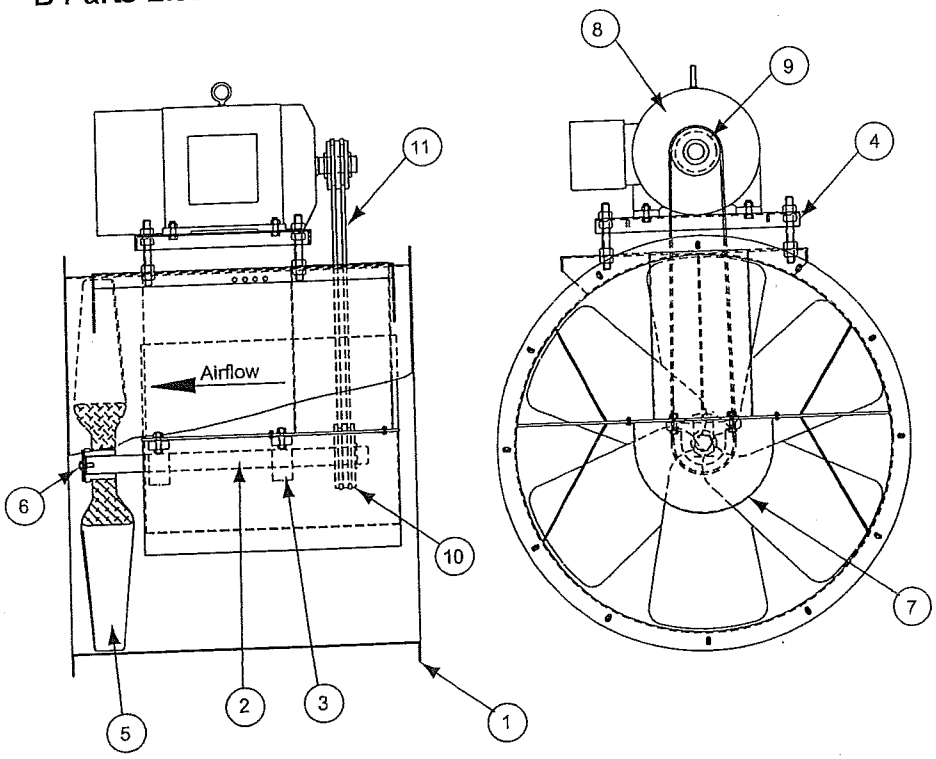

Item No.	Description
1	Drum Weldment
2	Shaft
3	Bearing
4	Motor Plate
5	Prop C-Cast Bushing H-High Temperature Construction S-Stainless Steel Construction
6	Prop Bushing
7	Bearing Cover
8	Motor
9	Drive Sheave
10	Driven Sheave
11	Belt

AFBV Parts List

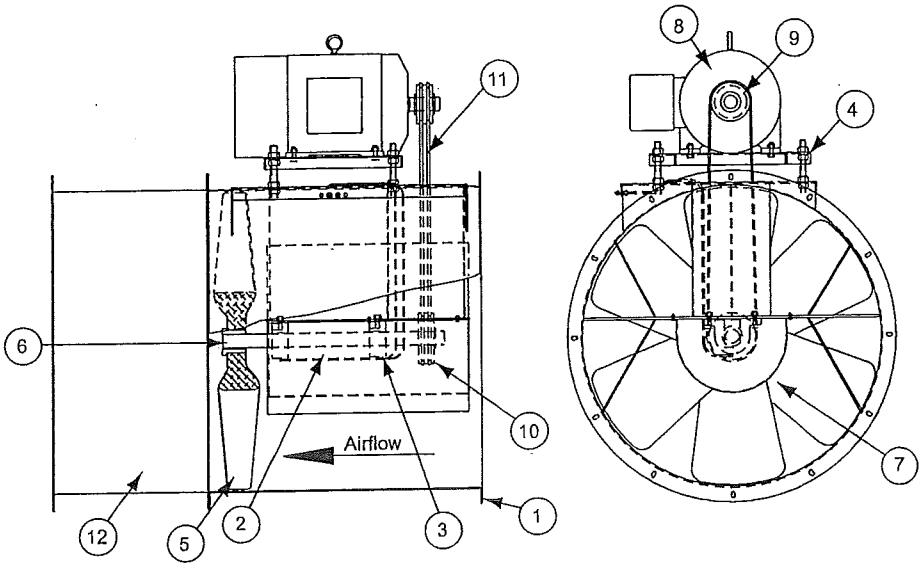

Item No.	Description
1	Drum Weldment
2	Shaft
3	Bearing
4	Motor Plate
5	Prop C-Cast Bushing H-High Temperature Construction S-Stainless Steel Construction
6	Prop Bushing
7	Bearing Cover
8	Motor
9	Drive Sheave
10	Driven Sheave
11	Belt
12	Vane Section

AFD-C Parts List

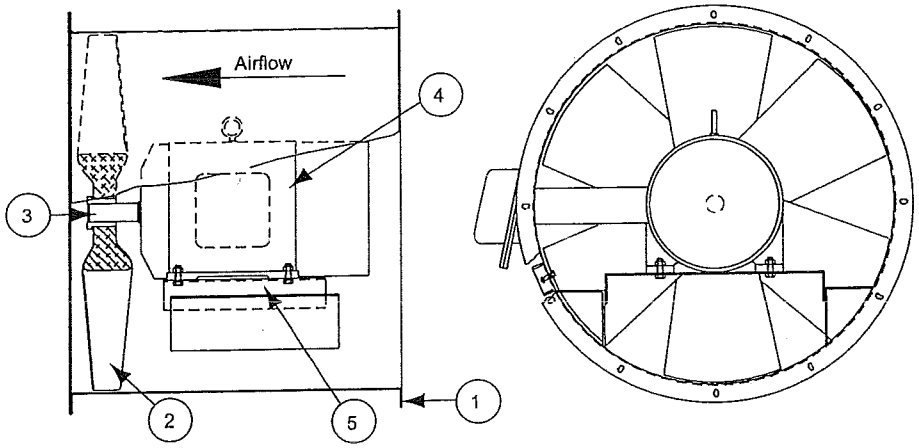

Item No.	Description
1	Drum Weldment
2	Propeller
3	Prop Bushing
4	Motor
5	Motor Mounting Bolts

AFDV-C Parts List

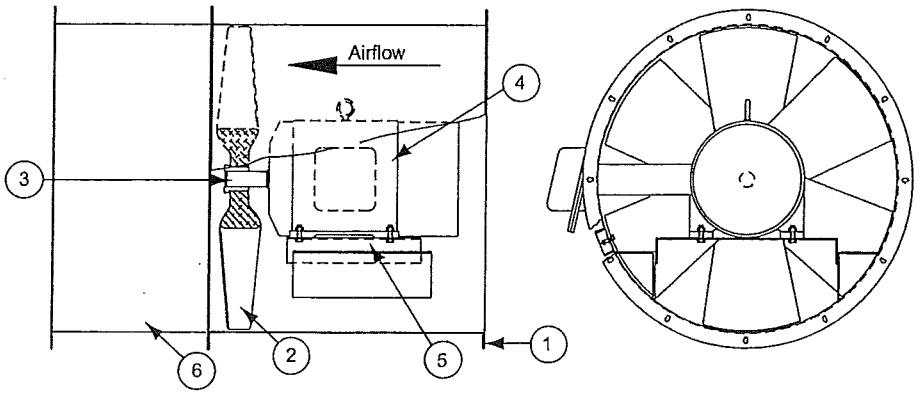

Item No.	Description
1	Drum Weldment
2	Propeller
3	Prop Bushing
4	Motor
5	Motor Mounting Bolts
6	Vane Section

Troubleshooting

Problem and Potential Cause
Low Capacity or Pressure •Incorrect direction of rotation. Make sure the fan rotates in same direction as the arrows on the motor or belt drive assembly. •Poor fan inlet conditions. There should be a straight clear duct at the inlet. •Improper prop alignment.
Excessive Vibration and Noise •Damaged or unbalanced wheel. •Belts too loose; worn or oily belts. •Speed too high. ıcorrect direction of rotation. Make sure the fan rotates in same direction as the arrows on the motor or belt drive assembly. Bearings need lubrication or replacement. •Fan surge.
Overheated Motor •Motor improperly wired. •Incorrect direction of rotation. Make sure the fan rotates in same direction as the arrows on the motor or belt drive assembly. •Cooling air diverted or blocked. •Improper prop clearance. •Incorrect fan RPMs. •Incorrect voltage.
Overheated Bearings •Improper bearing lubrication •Excessive belt tension.

Limited Warranty

Loren Cook Company warrants that your Loren Cook fan was manufactured free of defects in materials and workmanship, to the extent stated herein. For a period of one (1) year after date of shipment, we will replace any parts found to be defective without charge, except for shipping costs which will be paid by you.

This warranty is granted only to the original purchaser placing the fan in service.

This warranty is void if the fan or any part thereof has been altered or modified from its original design or has been abused, misused, damaged or is in worn condition or if the fan has been used other than for the uses described in the company manual. This warranty does not cover defects resulting from normal wear and tear.

To make a warranty claim, notify Loren Cook Company, General Offices, 2015 East Dale Street, Springfield, Missouri 65803-4637, explaining in writing, in detail, your complaint and referring to the specific model and serial numbers of your fan. Upon receipt by Loren Cook Company of your written complaint, you will be notified, within thirty (30) days of our receipt of your complaint, in writing, as to the manner in which your claim will be handled. If you are entitled to warranty relief, a warranty adjustment will be completed within sixty (60) business days of the receipt of your written complaint by Loren Cook Company.

This warranty gives only the original purchaser placing the fan in service specifically the right. You may have other legal rights which vary from state to state.

LOREN COOK COMPANY
Corporate Offices: 2015 E. Dale Street Springfield, MO 65803 417.869.6474
lorencook.com

Tag: HWUH-1 &2

Specification:

Manufacture: Sterling Unit Heaters

Drawing reference: M502 & M203

Location: B2 Ramp Level

STERLING HOT WATER UNIT HEATERS

REP: GC HVAC

PHONE: 908-663-2180

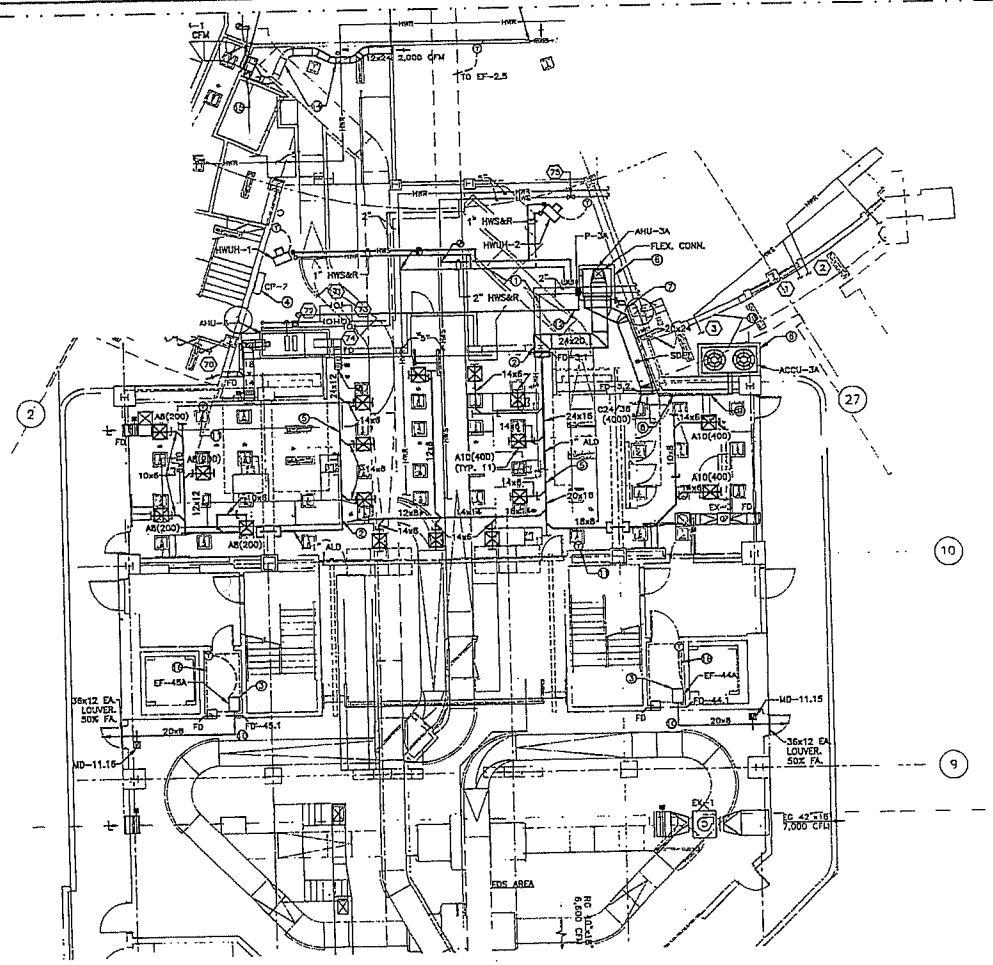

RAMP LEVEL PART PLAN III
SATELLITE B2 - INSTALLATION
P1.1 / M203
SCALE IN FEET

KEY NOTES:

1. FURNISH AND INSTALL INSULATION ON 5" HWS&R MAIN SUPPLY LINES AND 1" AND 2" HWS&R BRANCH LINES PER SPECIFICATIONS.
2. FURNISH AND INSTALL 1-1/2" HARD BOARD INSULATION ON PORTION OF DUCTWORK INSIDE MECHANICAL ROOM.
3. FURNISH AND INSTALL EXHAUST FANS AND SUPPORTS. COORDINATE WITH ELECTRICAL DRAWINGS FOR POWER AND CONTROL WIRING.
4. FURNISH AND INSTALL ALL NECESSARY CONTROL WIRING, ACCESSORIES AND ADDITIONAL CONTROL MODULES IN CP-2 ENCLOSURE AS REQUIRED TO CONTROL AHU-3A AND ACCU-3A VIA BUILDING MANAGEMENT SYSTEM.
5. FURNISH AND INSTALL ASSOCIATED DUCTWORK, INSULATION, SUPPORTS, ETC.
6. FURNISH AND INSTALL 4" HIGH CONCRETE HOUSEKEEPING PAD UNDER HVAC EQUIPMENT.
7. SUCTION & LIQUID REFRIGERANT LINES RUN STACKED ALONG WALL.
8. REFRIGERANT LINES SIZED PER MANUFACTURER'S RECOMMENDATIONS. INSULATE BOTH LINES.
9. RUN REFRIGERANT PIPING ABOVE CEILING IN PLENUM WITHIN ETD AREA.
10. FURNISH AND INSTALL EXHAUST FANS AND SUPPORTS. COORDINATE WITH ELECTRICAL DRAWINGS FOR POWER AND CONTROL WIRING. EXISTING FIRE SHUTTER DOOR FUSIBLE LINKAGE ASSEMBLY SHALL BE TEMPORARILY REMOVED FROM EXHAUST FAN AIRSTREAM FOR DUCTWORK INSTALLATION, THEN REPLACED SO THAT THE FUSIBLE LINK IS MOUNTED WITHIN THE EXHAUST DUCT AIRSTREAM VIA 2 HOLES ON BOTH SIDES OF THE DUCT AND CAN FREELY RELEASE AND TRIGGER THE FIRE SHUTTER IN CASE OF FIRE. FURNISH AND INSTALL NON-BINDING SLEEVES AT THE DUCT HOLES TO ALLOW FOR FUSIBLE LINKAGE AND CHAIN TO OPERATE FREELY IN CASE OF LINKAGE RELEASE.
11. FURNISH AND INSTALL WALL MOUNTED THERMOSTAT WITH LOCKABLE BOX. COORDINATE WITH ELECTRICAL DRAWINGS FOR POWER AND CONTROL WIRING.
12. FURNISH AND INSTALL 3/4" CONDENSATE DRAIN LINE AND PIPE TO FLOOR DRAIN AS SHOWN.
13. INSTALLATION OF ACCU-3 MUST BE COORDINATED SUCH THAT IT OCCURS ONLY AFTER ALL DEMOLITION WORK OF THE TEMPORARY SUPPLY AIR PLENUM, SHOWN ON DRAWING M111, IS COMPLETED.
14. 12x24 EXHAUST DUCT DN. TO HORIZONTAL RUN BENEATH CONVEYOR. RUN EXHAUST DUCT BENEATH CONVEYOR, MAINTAINING MIN. 12" CLEARANCE.
15. RUN 24x12 EXH. DUCT UP TO THE LEVEL OF EXISTING EXHAUST DUCT ON OTHER SIDE OF WALL. CONNECT NEW DUCTWORK TO EXISTING EXHAUST DUCT.
16. FURNISH AND INSTALL GALVANIZED STEEL DRAIN PAN IN EMR IN LOCATIONS BELOW ANY PIPING.

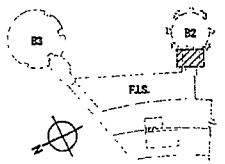

KEY PLAN (RAMP LEVEL)

Sheet 25 of 183

THE PORT AUTHORITY OF NY & NJ

R.G. VANDERWEIL ENGINEERS, LLP

VAL LEVIN
N.J. Professional Engineer # 24GE04579600

No.	Date	Revision	Approved

ENGINEERING DEPARTMENT

NEWARK LIBERTY INTERNATIONAL AIRPORT

MECHANICAL
HVAC
Title

TERMINAL B
REHABILITATION OF SATELLITE B-2
MECHANICAL AND ELECTRICAL SYSTEMS

RAMP LEVEL PART PLAN III SATELLITE B2 CONNECTOR INSTALLATION

This drawing and/or specification is the property of Vanderweil Engineers, LLP and may not be reproduced or published in any way without the prior written permission of Vanderweil Engineers, LLP. All rights reserved. Unauthorized use of this drawing and/or specification is prohibited. Vanderweil Engineers, LLP shall not be responsible for any modifications made to this drawing and/or specification without the prior written authorization of Vanderweil Engineers, LLP. Vanderweil Engineers, LLP shall not be responsible for any use of this drawing and/or specification on any project other than that for which it has been prepared and any such use without the prior written authorization of Vanderweil Engineers, LLP shall be at the recipient's sole risk and without liability to Vanderweil Engineers, LLP. The recipient shall indemnify and hold harmless Vanderweil Engineers, LLP from any and all claims, damages, losses, costs and expenses arising out of or resulting therefrom. Any electronic data or any hard copy thereof shall not be relied upon for accuracy or completeness. Electronic data should be verified before any construction or fabrication based upon this data is commenced. Vanderweil Engineers, LLP reserves the right to remove all electronic data from any media. Vanderweil Engineers, LLP shall not be responsible for changes made to this drawing and/or specification by any party other than Vanderweil Engineers, LLP. Changes made to this drawing and/or specification by the recipient are made at the recipient's sole risk and without liability to Vanderweil Engineers, LLP. The recipient shall indemnify and hold harmless Vanderweil Engineers, LLP from any and all claims, damages, losses, costs and expenses arising out of or resulting from such changes. Any electronic data or any hard copy thereof shall not be relied upon for accuracy or completeness. Electronic data should be verified before any construction or fabrication based upon this data is commenced. Vanderweil Engineers, LLP reserves the right to remove all electronic data from any media. Vanderweil Engineers, LLP shall not be responsible for changes made to this drawing and/or specification by any party other than Vanderweil Engineers, LLP. Changes made to this drawing and/or specification by the recipient are made at the recipient's sole risk and without liability to Vanderweil Engineers, LLP. The recipient shall indemnify and hold harmless Vanderweil Engineers, LLP from any and all claims, damages, losses, costs and expenses arising out of or resulting from such changes.

J. DUMORNE	J. DUMORNE	S. ESONTOS
Designed by	Drawn by	Checked by

Date 05/12/2010

Contract Number EWR-154.081

Drawing Number M203

PID# 08353000

G27508

COMBINATION FIRE AND SMOKE DAMPER SCHEDULE

DESIGNATION TYPE	LOCATION	MODEL NO.	DIMENSIONS (IN)	AIR HANDLING SYSTEM No.	LEAKAGE CLASS	SMOKE PURGE POSITION	FAILED POSITION	NO. OF ACTUATORS	POWER SUPPLY (BASIS OF DESIGN: RUSKIN)	REMARKS
FSD-11.1	RAMP LEVEL CEILING	FSD60	36 x 20	AC-11	1	OPEN	CLOSED	1	120 VAC	1, 2, 3
FSD-11.2	RAMP LEVEL CEILING	FSD60	48 x 20	AC-11	1	OPEN	CLOSED	1	120 VAC	1, 2, 3
FSD-11.3	RAMP LEVEL CEILING	FSD60	38 x 30	AC-11	1	OPEN	CLOSED	1	120 VAC	1, 2, 3
FSD-11.4	RAMP LEVEL CEILING	FSD60	26 x 12	AC-11	1	OPEN	CLOSED	1	120 VAC	1, 2, 3
FSD-11.5	RAMP LEVEL CEILING	FSD60	28 x 12	AC-11	1	OPEN	CLOSED	1	120 VAC	1, 2, 3
FSD-11.6	RAMP LEVEL CEILING	FSD60	36 x 12	HV-2	1	OPEN	CLOSED	1	120 VAC	1, 2, 3
FSD-11.7	RAMP LEVEL CEILING	FSD60	48 x 12	HV-2	1	OPEN	CLOSED	1	120 VAC	1, 2, 3
FSD-11.8	RAMP LEVEL CEILING	FSD60	36 x 12	HV-2	1	OPEN	CLOSED	1	120 VAC	1, 2, 3
FSD-11.9	RAMP LEVEL CEILING	FSD60	36 x 12	EF-2.1	1	OPEN	CLOSED	1	120 VAC	1, 2, 3
FSD-11.10	RAMP LEVEL CEILING	FSD60	44 x 6	EF-2.1	1	OPEN	CLOSED	1	120 VAC	1, 2, 3
FSD-11.11	RAMP LEVEL CEILING	FSD60	36 x 10	EF-2.1	1	OPEN	CLOSED	1	120 VAC	1, 2, 3
FSD-11.12	RAMP LEVEL CEILING	FSD60	38 x 10	EF-2.2	1	OPEN	CLOSED	1	120 VAC	1, 2, 3
FSD-11.13	RAMP LEVEL CEILING	FSD60	48 x 6	EF-2.2	1	OPEN	CLOSED	1	120 VAC	1, 2, 3
FSD-11.14	RAMP LEVEL CEILING	FSD60	38 x 10	EF-2.3	1	OPEN	CLOSED	1	120 VAC	1, 2, 3
FSD-11.15	RAMP LEVEL CEILING	FSD60	24 x 12	HV-1	1	OPEN	CLOSED	1	120 VAC	1, 2, 3
FSD-11.16	RAMP LEVEL CEILING	FSD60	48 x 12	HV-1	1	OPEN	CLOSED	1	120 VAC	1, 2, 3
FSD-11.17	RAMP LEVEL CEILING	FSD60	28 x 12	HV-1	1	OPEN	CLOSED	1	120 VAC	1, 2, 3
FSD-11.18	RAMP LEVEL CEILING	FSD60	60 x 48	AC-11	1	OPEN	CLOSED	2	120 VAC	1, 2, 3
FSD-11.19	RAMP LEVEL CEILING	FSD60	138 x 80	AC-11	1	OPEN	CLOSED	2	120 VAC	1, 2, 3
FSD-11.20	RAMP LEVEL	FSD60	78 x 10	EF-2.3	1	OPEN	CLOSED	1	120 VAC	1, 2, 3
FSD-11.21	RAMP LEVEL ELEC. ROOM	FSD60	24 x 24	EF-2.8	1	OPEN	CLOSED	1	120 VAC	1, 2, 3
FSD-11.22	RAMP LEVEL ELEC. ROOM	FSD60	12 x 24	EF-2.8	1	OPEN	CLOSED	1	120 VAC	1, 2, 3
FSD-11.23	RAMP LEVEL ELEC. ROOM	FSD60	24 x 12	EF-2.5	1	OPEN	CLOSED	1	120 VAC	1, 2, 3
FSD-11.24	PASSENGER LEVEL CEILING	FSD60M	48 x 30	AC-11	1	OPEN	CLOSED	1	120 VAC	1, 2, 3
FSD-11.25	PASSENGER LEVEL CEILING	FSD60M	120 x 30	AC-11	1	OPEN	CLOSED	2	120 VAC	1, 2, 3
FSD-11.26	PASSENGER LEVEL CEILING	FSD60M	60 x 30	AC-11	1	OPEN	CLOSED	1	120 VAC	1, 2, 3
FSD-11.27	PASSENGER LEVEL CEILING	FSD60M	72 x 30	AC-11	1	OPEN	CLOSED	1	120 VAC	1, 2, 3
FSD-11.28	PASSENGER LEVEL CEILING	FSD60M	132 x 16	AC-11	1	OPEN	CLOSED	1	120 VAC	1, 2, 3
FSD-11.29	RAMP LEVEL HDR INLET	FSD60M	72 x 42	AC-11	1	OPEN	CLOSED	1	120 VAC	1, 2, 3
FSD-11.30	RAMP LEVEL HDR INLET	FSD60M	72 x 42	AC-11	1	OPEN	CLOSED	1	120 VAC	1, 2, 3
FSD-11.31	RAMP LEVEL HDR INLET	FSD60M	72 x 42	AC-11	1	OPEN	CLOSED	1	120 VAC	1, 2, 3

1. INTERLOCK TO FIRE ALARM PANEL.
2. PRE-WIRE DAMPER ASSEMBLIES WITH MULTIPLE ACTUATORS TO BE A SINGLE POINT OF CONNECTION FOR POWER AND FIRE ALARM.
3. NUMBER OF ACTUATORS IS BASED ON RUSKIN. PROVIDE ADDITIONAL ACTUATORS AS REQUIRED BY ALTERNATE MANUFACTURERS.

FIRE DAMPER SCHEDULE

BASIS OF DESIGN: RUSKIN

DESIGNATION TYPE	LOCATION	MODEL NO.	DIMENSIONS (IN)	AIR HANDLING SYSTEM No.	LEAKAGE CLASS	FAILED POSITION	POWER SUPPLY	REMARKS
FD-3.1	RAMP LEVEL SA DUCT	DIBD2	24 x 20	AHU-3A	1	CLOSED	120 VAC	–
FD-3.2	RAMP LEVEL RA DUCT	DIBD2	20 x 24	AHU-3A	1	CLOSED	120 VAC	–
FD-44.1	RAMP LEVEL DAR-6	DIBD2	20 x 8	EF-44A	1	CLOSED	120 VAC	–
FD-45.1	RAMP LEVEL DAR-8	DIBD2	20 x 8	EF-45A	1	CLOSED	120 VAC	–
FD-46.1	RAMP LEVEL DAR-3	DIBD2	20 x 8	EF-46A	1	CLOSED	120 VAC	–
FD-46.2	RAMP LEVEL DAR-5	DIBD2	20 x 8	EF-46A	1	CLOSED	120 VAC	–
FD-47.1	RAMP LEVEL DAR-4	DIBD2	16 x 16	EF-47A	1	CLOSED	120 VAC	–
FD-47.2	RAMP LEVEL DAR-9	DIBD2	16 x 16	EF-47A	1	CLOSED	120 VAC	–

AIR CONDITIONING UNIT (PACKAGED) SCHEDULE

UNIT NO.	LOCATION	SERVICE	MIN. OA CFM	FAN TYPE	FAN CFM	FAN ESP	FAN MOTOR HP	VOLTS	PHASE	HERTZ	FILTERS	EAT °F DB/WB	LAT °F DB/WB	REFRIGERANT TYPE	DX COIL TMBH	DX COIL SENS. MBH	MAX. FACE VELOCITY (FPM)	MAX AIR PD	FINS/IN.	ROWS
AHU-3A	B2 MER	B2 ETD AREA	–	FC	4,000	0.75	3.0	460	3	60	MERV 8	80/67	52.8/52.1	R-410	148.5	107.8	837	0.89	8	4
AHU-8A	B3 EXIT AREA CLG.	B3 ETD AREA	–	FC	2,000	0.75	1.0	460	3	60	MERV 8	80/67	53.7/51.8	R-410	91.8	57.5	500	0.48	11	3
AHU-8B	B3 EXIT AREA CLG.	B3 ETD AREA	–	FC	2,000	0.75	1.0	460	3	60	MERV 8	80/67	53.7/51.8	R-410	91.8	57.5	500	0.48	11	3

AIR CONDITIONING UNIT (PACKAGED) SCHEDULE – CONT'D

UNIT NO.	HOT WATER COIL TOTAL MBH	EAT °F DB	LAT °F DB	FINS/IN.	ROWS	MAX AIR PD (IN. WG)	MAX WATER PD (FT/WC)	GPM	EWT	LWT	MAX OPERATING WEIGHT (LBS.)	MANUFACTURERS NAME	MODEL NO.	REMARKS
AHU-3A	120.5	70	123.5	8	1	0.14	3.5	24.0	200	180	450	TRANE OR APP'D EQUAL	TWE120	1
AHU-8A	124.0	70	127.5	14	1	0.13	4.8	13.0	200	180	385	TRANE OR APP'D EQUAL	TWE090	1
AHU-8B	124.0	70	127.5	14	1	0.13	4.8	13.0	200	180	385	TRANE OR APP'D EQUAL	TWE090	1

1. FURNISH AND INSTALL DUCT MOUNTED SMOKE DETECTOR, INTERLOCK DUCT MOUNTED SMOKE DETECTOR WITH FIRE ALARM PANEL.

AIR COOLED CONDENSING UNIT SCHEDULE

UNIT NO.	LOCATION	SERVICE	TYPE	NOMINAL TONS	REFRIGERANT TYPE	REFRIGERANT PIPING O.D. (IN.) LIQUID	GAS/SUCTION	CONDENSER EAT °F DB	MIN. OA TEMP. (°F)	VOLTS	PHASE	HERTZ	MOP	MCA	OPERATING WEIGHT (LBS.)	MANUFACTURERS NAME	MODEL NO.	REMARKS
ACCU-3A	B2 CORR.	B2 ETD AREA	SCROLL	10	R-410	1/2	1-1/8	95	45	460	3	60	25	20.1	550	TRANE OR APP'D EQUAL	TTA120	1,2,3,4
ACCU-8A	B3 CORR.	B3 ETD AREA	SCROLL	8	R-410	1/2	1-1/8	95	38	460	3	60	30	24.1	438	TRANE OR APP'D EQUAL	TTA073	1,2,3,4
ACCU-8B	B3 CORR.	B3 ETD AREA	SCROLL	8	R-410	1/2	1-1/8	95	38	460	3	60	30	24.1	438	TRANE OR APP'D EQUAL	TTA073	1,2,3,4

1. FURNISH AND INSTALL SWEAT ADAPTER KITS.
2. FURNISH AND INSTALL PHENOLIC COATED CONDENSER COILS WITH HIGH EFFICIENCY ALUMINUM PLATE TYPE FINS.
3. MOTORS FOR CONDENSING UNITS SHALL BE TEFC.
4. FURNISH AND INSTALL NEMA 3R DISCONNECT SWITCHES.

HEATING COILS

ZONE NAME	ZONE CFM	COIL QUANT.	ZONE NO.	ZONE MBH	FACE AREA (FT²)	FINS PER INCH	ROWS	EAT °F DB	LAT °F DB	WxH (IN)	EWT °F	LWT °F	AIR P.D. (IN WC)	WATER P.D. (IN WC)	GPM PER ZONE	MANUFACTURER MODEL NUMBER (OR APPROVED EQUAL)	REMARKS
RHC-11.1	29,100	1	1	1085	25.0	7	2	38.0	72.4	60x60	200	179.8	0.40	4.65	111	HEATCRAFT 5WS0802A	COIL SHALL BE MOUNTED ON AC-11
RHC-11.2	22,200	1	2	1044	25.0	11	1	38.0	81.4	60x60	200	178.7	0.27	3.85	100	HEATCRAFT 5WS0702A	COIL SHALL BE MOUNTED ON AC-11
RHC-11.3	29,700	1	3	1363	25.0	7	2	38.0	80.3	60x60	200	178.2	0.49	8.18	128	HEATCRAFT 5WS0802A	COIL SHALL BE MOUNTED ON AC-11
RHC-11.4	6,300	1	4	281	9.2	8	2	38.0	79.1	22x60	200	180.0	0.13	3.19	29	HEATCRAFT 5WQ1101A	COIL SHALL BE MOUNTED ON AC-11

HOT WATER UNIT HEATER SCHEDULE

UNIT NO.	LOCATION	TYPE	OUTPUT MBH	GPM	NOMINAL CFM	MOTOR HP	ELECTRIC VOLTS	PHASE	HERTZ	OPERATING WEIGHT (LBS.)	MANUFACTURERS NAME	MODEL NO.	REMARKS
HWUH-1	B1 ETD MER	HORIZONTAL	69.7	7.0	1400	1/20	120	1	60	22	STERLING OR APP'D EQUAL	HS-98	
HWUH-2	B2 ETD MER	HORIZONTAL	69.7	7.0	1400	1/20	120	1	60	22	STERLING OR APP'D EQUAL	HS-98	

DIFFUSER, GRILLE & REGISTER SCHEDULE

SYMBOL	NECK SIZE/ LINEAR LENGTH	SELECTION RANGE (CFM)	SERVICE	MOUNTING	ACCESSORIES	NC OR PRESSURE DROP NOT TO EXCEED	MANUFACTURER MODEL NUMBER (OR APPROVED EQUAL)	REMARKS
A	SEE DWGS	SEE DWGS	SUPPLY	LAY-IN	OBD	40	TITUS TMS	FURNISH AND INSTALL SECTORIZING BAFFLES AS SHOWN ON THE PLAN
B	SEE DWGS	SEE DWGS	RETURN	LAY-IN	N/A	40	TITUS PAR	FURNISH AND INSTALL RETURN BOOT PER DETAIL
C	SEE DWGS	SEE DWGS	RETURN	WALL	N/A	40	TITUS 350RL	–

1. CUSTOM COLOR OF PASSENGER LEVEL DIFFUSERS/GRILLES TO BE SELECTED BY ENGINEER

HOT WATER AIR CURTAIN

UNIT NO.	LOCATION	MOTOR FAN DATA NO.	HP	CFM	HOT WATER COIL DATA COIL AREA (S.F.)	COIL FINS (FPI)	COIL ROWS	AIR SIDE MBH	EAT (°F)	LAT (°F)	WATER SIDE GPM	EWT (°F)	LWT (°F)	WPD (FT)	LENGTH (FT)	ELEC. DATA V	Ø	HZ	MANUFACTURER MODEL NUMBER (OR APPROVED EQUAL)	REMARKS
HAC-1.1	RAMP LEVEL OPEN AREA N. DOOR	3	1	12000	11.8	10	2	583	70	115	42	200	172	9.4	16	460	3	60	MARS 144HV-3	DOOR MICROSWITCH AND MOTOR CONTROL PANEL
HAC-1.2	RAMP LEVEL OPEN AREA N. DOOR	3	1	12000	11.8	10	2	583	70	115	42	200	172	9.4	16	460	3	60	MARS 144HV-3	DOOR MICROSWITCH AND MOTOR CONTROL PANEL
HAC-1.3	RAMP LEVEL OPEN AREA S. DOOR	3	1	12000	11.8	10	2	583	70	115	42	200	172	9.4	16	460	3	60	MARS 144HV-3	DOOR MICROSWITCH AND MOTOR CONTROL PANEL
HAC-1.4	RAMP LEVEL OPEN AREA S. DOOR	3	1	12000	11.8	10	2	583	70	115	42	200	172	9.4	16	460	3	60	MARS 144HV-3	DOOR MICROSWITCH AND MOTOR CONTROL PANEL

THE PORT AUTHORITY OF NY & NJ

R.G. VANDERWEIL ENGINEERS, LLP

VAL LEVIN
N.J. Professional Engineer # 24GE04679600

No.	Date	Revision	Approved

ENGINEERING DEPARTMENT

NEWARK LIBERTY INTERNATIONAL AIRPORT

MECHANICAL
HVAC

Title

TERMINAL B
REHABILITATION OF SATELLITE B-2
MECHANICAL AND ELECTRICAL SYSTEMS

SCHEDULES
SHEET 2 OF 4

J. DUMORNE — Designed by
J. DUMORNE — Drawn by
S. CSONTOS — Checked by

Date 05/12/2010

Contract Number EWR-154.081

Drawing Number M502

PID# 08353000

G27508

INSTALLATION INSTRUCTIONS & PARTS LIST

HORIZONTAL STEAM AND HOT WATER UNIT HEATERS

ATTENTION: READ THIS MANUAL AND ALL LABELS ATTACHED TO THE UNIT CAREFULLY BEFORE ATTEMPTING TO INSTALL, OPERATE OR SERVICE THESE UNITS! CHECK UNIT DATA PLATE FOR TYPE OF GAS AND ELECTRICAL SPECIFICATIONS AND MAKE CERTAIN THAT THESE AGREE WITH THOSE AT POINT OF INSTALLATION. RECORD THE UNIT MODEL AND SERIAL No.(s) IN THE SPACE PROVIDED. RETAIN FOR FUTURE REFERENCE.

Model No. _____ Serial No. _____

⚠WARNING Improper installation, adjustment, alteration, service or maintenance can cause property damage, injury or death. Read the installation, operating and maintenance instructions thoroughly before installing or servicing this equipment.

C SA® US

INSTALLER'S RESPONSIBILITY

Installer Please Note: This equipment has been tested and inspected. It has been shipped free from defects from our factory. However, during shipment and installation, problems such as loose wires, leaks or loose fasteners may occur. **It is the installer's responsibility to inspect and correct any problems that may be found.**

RECEIVING INSTRUCTIONS

Inspect shipment immediately when received to determine if any damage has occurred to the unit during shipment. After the unit has been uncrated, check for any visible damage to the unit. Turn fan by hand to determine if damage has occurred. If any damage is found, the consignee should sign the bill of lading indicating such damage and immediately file claim for damage with the transportation company.

MESTEK
260 NORTH ELM ST.
WESTFIELD, MA 01085

TABLE OF CONTENTS

GENERAL SAFETY INFORMATION 3
SPECIFICATIONS
- Dimensional Data 4
- Steam Performance Data 5
- Steam Calculations & Correction Factors 6
- Hot Water Performance Data 7
- Hot Water Calculations & Correction Factors 8
- Technical Data 9
- Motor Data 10

LOCATION 11
INSTALLATION
- Unit Mounting 12
- Piping 12-16

ELECTRICAL CONNECTIONS 17
- Operation 17
- Thermostat Wiring and Location 17

WIRING INSTALLATION 18
OPTIONS 19
MAINTENANCE 20
REPLACEMENT PARTS 21
TROUBLESHOOTING GUIDE 22
INSPECTION SHEET 24
WARRANTY 23

NOTICE: It is the owner's responsibility to provide any scaffolding or other apparatus required to perform emergency service or annual/periodic maintenance to this equipment.

DESCRIPTION

Horizontal hydronic unit heaters are available in both serpentine and header type units. Serpentine units offer outputs from 8,030 to 35,900 BTU's (2.4 to 10.5 kW) and are ideal for hot water (only) installations with limited clearances. Header type horizontal units range from 18,000 to 360,000 (5.3 to 105.5 kW) and can operate with either hot water or steam. Both units are furnished with totally enclosed motors, with explosion proof motors as optional on header types. The designs are certified by CSA (per CAN/CSA-C22.2 and UL1995). **Do not alter these units in any way and do not attach any ductwork to the units.** If you have any questions after reading this manual, contact the manufacturer.

Figure 1
Serpentine Type

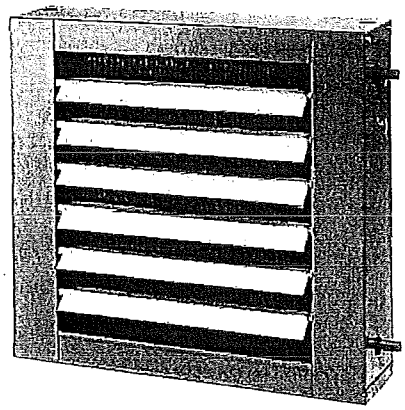

Figure 2
Header Type

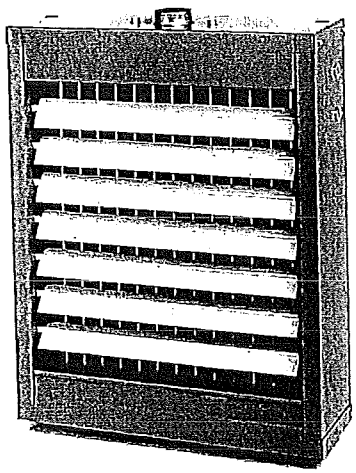

The following terms are used throughout this manual, in addition to CSA requirements, to bring attention to the presence of potential hazards or to important information concerning the product:

⚠ DANGER **Indicates an imminently hazardous situation which, if not avoided, will result in death, serious injury or substantial property damage.**

⚠ WARNING **Indicates an imminently hazardous situation which, if not avoided, could result in death, serious injury or substantial property damage.**

⚠ CAUTION **Indicates an imminently hazardous situation which, if not avoided, may result in minor injury or property damage.**

NOTICE: Used to notify of special instructions on installation, operation or maintenance which are important to equipment but not related to personal injury hazards.

GENERAL SAFETY INFORMATION

⚠ WARNING **Failure to comply with the general safety information may result in extensive property damage, severe personal injury or death.**

⚠ WARNING **Do not alter the unit heater in any way or damage to the unit and/or severe personal injury or death may occur!**

⚠ WARNING **Disconnect all power supplies before installing or servicing the heater. If the power disconnect is out of sight, lock it in the open position and tag it to prevent unexpected application of power. Failure to do so could result in fatal electric shock, or severe personal injury.**

⚠ CAUTION **Insure that all power sources conform to the requirements of the unit heater or damage to the unit will result!**

Follow installation instructions CAREFULLY to avoid creating unsafe conditions. All external wiring must conform to applicable current local codes, and to the latest edition of the National Electric Code ANSI/NFPA No. 70. In Canada, all external wiring must conform to the Canadian Electric Code, Part 1 CSA Standard C22.1 All wiring should be done and checked by a qualified electrician using copper wire only. All steam and hot water connections should be made and leak-tested by a suitably qualified individual, per instructions in this manual. Also follow procedures listed on the "Unit Equipment Start-Up Sheet" located in this manual.

Make certain that the power source conforms to the electrical requirements of the heater.

⚠ WARNING **Do not depend upon a thermostat or other switch as sole means of disconnecting power when installing or servicing heater. Always disconnect power at main circuit breaker as described above. Failure to do so could result in fatal electric shock.**

Special attention must be given to any grounding information pertaining to this heater. To prevent the risk of electrocution, the heater must be securely and adequately grounded. This should be accomplished by connecting a grounded conductor between the service panel and the heater. To ensure a proper ground, the grounding means must be tested by a qualified electrician.

Do not insert fingers or foreign objects into the heater or its air moving device. Do not block or tamper with the heater in any manner while in operation or just after it has been turned off, as some parts may be hot enough to cause injury.

To meet CSA and OSHA requirements, units mounted below 8 feet (2.4m) from the floor must be equipped with an OSHA fan guard.

It is good practice to have a shutoff switch on the electrical power lines controlling the heater. Whenever a unit is serviced, shut power off to the unit.

Since these units are installed in most instances higher than 8 feet (2.4m), proper type of ladders or scaffolding should be used, as set up by OSHA requirements (see Notice on page 2).

In industrial plants, professional maintenance crews should service this equipment.

All Horizontal Unit Heaters are shipped fully assembled and may be used for steam or hot water applications. Coils are factory tested at 250 psig (1723.5 kg).

Each unit is packaged individually and marked for proper identification. Use normal care in handling and during installation to prevent damage to the coils fins, fan and casing.

Unless otherwise specified, the following conversions may be used for calculating SI unit measurements:

1 foot = 0.305 m	1 inch water column = 0.249 kPa
1 inch = 25.4 mm	meter/second = FPM ÷ 196.8
1 psig = 6.894 kPa	liter/second = CFM x 0.472
1 pound = 0.453 kg	1000 Btu per hour = 0.293 kW
1 gallon = 3.785 L	1000 Btu/Cu. Ft. = 37.5 MJ/m^3
	1 cubic foot = 0.028 m^3

DIMENSIONAL DATA

Figure 3 – Serpentine Type
Models 108A, 118A, 125A, 136A

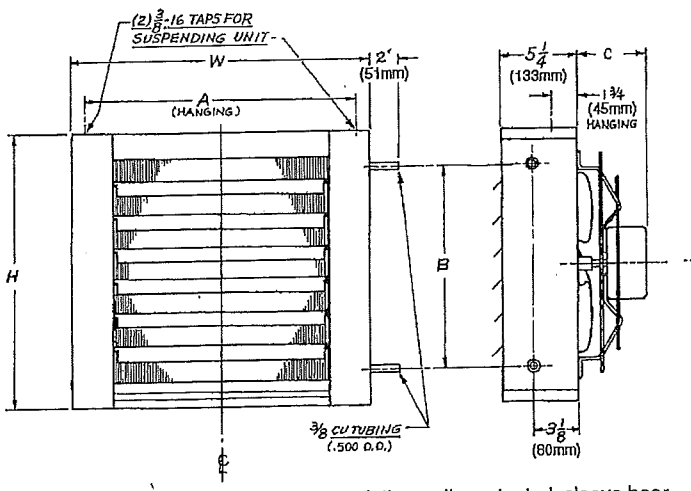

Figure 4 – Header Type
Models 18 thru 360

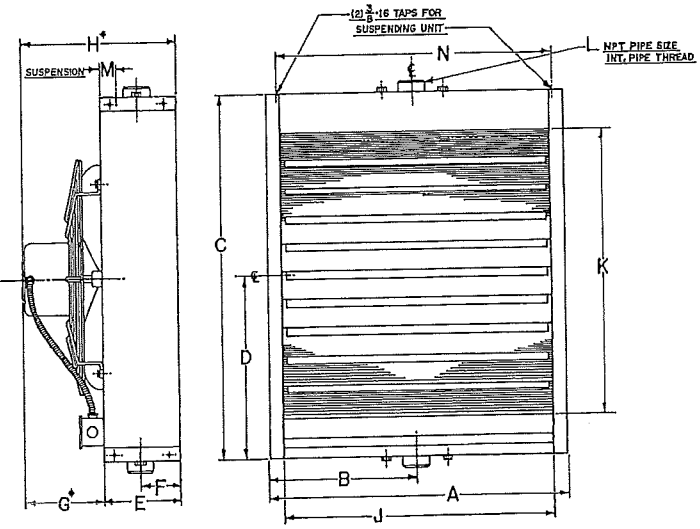

NOTE: Motors are totally enclosed, thermally protected, sleeve bearing, with 2"(h) x 4"(w) conduit connection boxes. 3/8-16 nutserts are attached to enclosure for balanced hanging.

Table 1 – Figure 3 Serpentine Models

MODEL	H inches (mm)	W inches (mm)	A inches (mm)	B inches (mm)	C inches (mm)	NO. OF LOUVERS	NOM. FAN DIAM. inches (mm)	APPROX. SHIP WT. lbs. (kg)
108A	16 (406)	18 (457)	16 7/32 (412)	11 1/4 (286)	4 1/4 (108)	5	9 (229)	22 (10.0)
118A	16 (406)	18 (457)	16 7/32 (412)	11 1/4 (286)	4 1/4 (108)	5	10 (254)	24 (10.9)
125A	16 (406)	18 (457)	16 7/32 (412)	11 1/4 (286)	4 1/4 (108)	5	10 (254)	25 (11.3)
136A	18 1/2 (470)	20 1/2 (521)	18 22/32 (475)	13 3/4 (349)	5 1/8 (130)	6	12 (305)	31 (14.0)

Table 2 – Figure 4 Header Models

MODEL	A inches (mm)	B inches (mm)	C inches (mm)	D inches (mm)	E inches (mm)	F inches (mm)	G* inches (mm)	H* inches (mm)	J inches (mm)	K inches (mm)	L inches (mm)	M inches (mm)	N inches (mm)	NO. OF LOUVERS	NOM. FAN DIAM. inches (mm)	APPROX. SHIP WT. lbs. (kg)
18	14 5/8 (371)	7 5/16 (186)	15 (381)	7 1/2 (191)	6 1/8 (156)	2 15/16 (75)	3 1/4 (83)	9 3/8 (238)	12 1/4 (311)	9 1/2 (241)	1 1/4 (32)	2 1/4 (57)	12 7/8 (327)	4	9 (229)	26 (11.8)
24 36	14 5/8 (371)	7 5/16 (186)	18 (457)	9 (229)	6 1/8 (156)	2 15/16 (75)	3 1/4 (83)	9 3/8 (238)	12 1/4 (311)	12 1/2 (318)	1 1/4 (32)	2 1/4 (57)	12 7/8 (327)	5	10 (254)	30 (13.6)
48 60	17 1/8 (435)	8 9/16 (217)	20 1/2 (521)	10 1/4 (260)	5 7/8 (149)	2 15/16 (75)	5 1/16 (129)	10 15/16 (278)	14 3/4 (375)	15 (381)	1 1/4 (32)	1 3/4 (44)	15 3/8 (391)	6	12 (305)	41 (18.6)
72	18 3/8 (467)	9 3/16 (233)	21 3/4 (552)	10 7/8 (276)	6 (152)	2 15/16 (75)	5 1/16 (129)	11 1/16 (281)	16 (406)	16 1/4 (413)	1 1/4 (32)	1 3/4 (44)	16 5/8 (422)	7	14 (356)	44 (19.9)
84	20 7/8 (530)	10 7/16 (265)	24 1/4 (616)	12 1/8 (308)	6 1/8 (156)	2 15/16 (75)	5 11/16 (144)	11 13/16 (300)	18 1/2 (470)	18 3/4 (476)	1 1/4 (32)	1 3/4 (44)	19 1/8 (486)	8	14 (356)	47 (21.3)
96 108	19 5/8 (498)	9 13/16 (249)	24 (610)	12 (305)	6 5/16 (160)	3 3/16 (81)	7 1/2 (191)	13 13/16 (351)	17 1/4 (438)	17 1/2 (445)	1 1/2 (38)	1 3/4 (44)	17 7/8 (454)	8	16 (406)	49 (22.2)
120	20 7/8 (530)	10 7/16 (265)	25 1/4 (641)	12 5/8 (321)	6 5/16 (160)	3 3/16 (81)	6 11/16 (170)	13 (330)	18 1/2 (470)	18 3/4 (476)	1 1/2 (38)	1 3/4 (44)	19 1/8 (486)	8	18 (457)	59 (26.7)
132 144	23 3/8 (594)	11 11/16 (297)	27 3/4 (705)	13 7/8 (352)	6 5/16 (160)	3 3/16 (81)	7 5/8 (194)	14 (356)	21 (533)	21 1/4 (540)	1 1/2 (38)	1 3/4 (44)	21 5/8 (549)	9	18 (457)	74 (33.5)
156	23 3/8 (594)	11 11/16 (297)	27 3/4 (705)	13 7/8 (352)	6 5/16 (160)	3 3/16 (81)	7 7/16 (194)	13 3/4 (349)	21 (533)	21 1/4 (540)	1 1/2 (38)	1 3/4 (44)	21 5/8 (549)	9	18 (457)	74 (33.5)
180 204	24 5/8 (625)	12 5/16 (313)	29 (737)	14 1/2 (368)	6 3/8 (162)	3 3/16 (81)	7 7/16 (194)	13 3/4 (349)	22 1/4 (565)	22 1/2 (572)	1 1/2 (38)	1 3/4 (44)	22 7/8 (581)	9	18 (457)	90 (40.8)
240	27 7/8 (708)	13 15/16 (354)	30 1/4 (768)	15 1/8 (384)	8 1/8 (206)	3 3/16 (81)	5 7/8 (149)	14 (356)	25 1/2 (648)	23 3/4 (603)	2 (51)	1 3/4 (44)	26 1/8 (664)	10	20 (508)	125 (57)
280	27 7/8 (708)	13 15/16 (354)	30 1/4 (768)	15 1/8 (384)	8 1/8 (206)	3 3/16 (81)	9 5/8 (244)	17 3/4 (451)	25 1/2 (648)	23 3/4 (603)	2 (51)	1 3/4 (44)	26 1/8 (664)	10	20 (508)	118 (53)
300 360	33 3/8 (848)	16 11/16 (424)	37 3/4 (959)	18 7/8 (479)	9 (229)	3 3/16 (81)	9 5/8 (244)	18 5/8 (473)	31 (787)	31 1/4 (794)	2 (51)	1 3/4 (44)	31 5/8 (803)	13	24 (610)	154 (69.8)

* Applies to standard motor with standard fan guard. When optional motors or OSHA fan guards are requested, dimensions will vary according to the substitutions made.

NOTES:
1. Standard motor and standard guard shown.
2. Optional OSHA guards available for all units with 1 phase motors.
3. All 3 phase and explosion proof motors are shelf mounted.

STEAM PERFORMANCE DATA

Table 3 - Header Type Models only

Unit Size	Output BTU/ HR* (kW)	Cond. lbs./hr. (kg/hr)	E.D.R. Sq. Ft. (sq. m)	Final Air Deg.°F (Deg. °C)	Motor HP (kW)	RPM	Nominal CFM (m^3/s)	Outlet FPM (m/s)	Nom. Amps @ 115VAC†	Nom. Fan Diam. Inches (mm)
18	18,000 (5.3)	18.0 (8.2)	75 (7.0)	102 (39)	16 Watts	1550	395 (.186)	395 (2.007)	0.80	9 (228.6)
	16,200 (4.7)	16.2 (7.3)	68 (6.3)	105 (41)		1350	330 (.156)	330 (1.676)		9 (228.6)
24	24,000 (7.0)	24.5 (11.1)	100 (9.3)	109 (43)	16 Watts	1550	450 (.212)	450 (2.286)	0.80	10 (254.0)
	21,600 (6.3)	22.0 (10.0)	90 (8.4)	112 (44)		1350	380 (.179)	380 (1.930)		10 (254.0)
36	36,000 (10.5)	37.0 (16.8)	150 (13.9)	119 (48)	25 Watts	1550	550 (.260)	550 (2.794)	1.2	10 (254.0)
	32,400 (9.5)	33.0 (14.9)	135 (12.5)	120 (49)		1350	480 (.227)	480 (2.438)		10 (254.0)
48	48,000 (14.1)	49.0 (22.2)	200 (18.6)	119 (48)	1/20 (.037)	1000	750 (.354)	550 (2.794)	1.4	12 (304.8)
	43,200 (12.7)	44.0 (19.9)	180 (16.7)	123 (51)		900	630 (.297)	460 (2.337)		12 (304.8)
60	60,000 (17.6)	61.0 (27.6)	250 (23.2)	121 (49)	1/20 (.037)	1000	900 (.425)	650 (3.302)	1.4	12 (304.8)
	54,000 (15.8)	55.0 (24.9)	225 (20.9)	131 (55)		900	700 (.330)	510 (2.591)		12 (304.8)
72	72,000 (21.1)	73.0 (33.1)	300 (27.9)	120 (49)	1/20 (.037)	1000	1100 (.519)	800 (4.064)	1.4	14 (355.6)
	64,800 (19.0)	66.0 (29.9)	270 (25.1)	123 (51)		900	950 (.448)	700 (3.556)		14 (355.6)
84	84,000 (24.6)	85.0 (38.5)	350 (32.5)	115 (46)	1/12 (.062)	1000	1400 (.661)	900 (4.572)	2.2	14 (355.6)
	75,600 (22.2)	76.0 (34.4)	315 (29.3)	123 (51)		900	1100 (.519)	750 (3.810)		14 (355.6)
96	96,000 (28.1)	97.0 (43.9)	400 (37.2)	123 (51)	1/12 (.062)	1000	1400 (.661)	930 (4.724)	2.2	16 (406.4)
	86,400 (25.3)	88.0 (39.9)	360 (33.4)	132 (56)		900	1100 (.519)	800 (4.064)		16 (406.4)
108	108,000 (31.6)	110.0 (49.8)	450 (41.8)	115 (46)	1/12 (.062)	1000	1800 (.850)	1000 (5.080)	2.2	16 (406.4)
	97,200 (28.5)	98.0 (44.4)	405 (37.6)	120 (49)		900	1500 (.708)	900 (4.572)		16 (406.4)
120	120,000 (35.2)	122.0 (55.3)	500 (46.5)	118 (48)	1/3 (.249)	1140	1900 (.897)	900 (4.572)	4.5	18 (457.2)
132	132,000 (38.7)	134.0 (60.7)	550 (51.1)	121 (49)	1/3 (.249)	1140	2000 (.944)	950 (4.826)	4.5	18 (457.2)
144	144,000 (42.2)	146.0 (66.1)	600 (55.7)	120 (49)	1/3 (.249)	1140	2200 (1.038)	1000 (5.080)	4.5	18 (457.2)
156	156,000 (45.7)	160.0 (72.5)	650 (60.4)	115 (46)	1/3 (.249)	1140	2600 (1.227)	1150 (5.842)	4.5	18 (457.2)
180	180,000 (52.7)	190.0 (86.1)	770 (71.5)	135 (57)	1/3 (.249)	1140	2200 (1.038)	800 (4.064)	4.5	18 (457.2)
204	204,000 (59.8)	208.0 (94.2)	850 (79.0)	124 (51)	1/3 (.249)	1140	2900 (1.369)	1000 (5.080)	4.5	18 (457.2)
240	240,000 (70.3)	244.0 (110.5)	1000 (92.9)	123 (51)	1/3 (.249)	1140	3500 (1.652)	900 (4.572)	4.5	20 (508.0)
280	280,000 (82.0)	280.0 (126.8)	1100 (102.2)	121 (49)	1/2 (.373)	1100	4200 (1.982)	980 (4.978)	5.4	20 (508.0)
300	300,000 (87.9)	310.0 (140.4)	1250 (116.1)	117 (47)	1/2 (.373)	1100	5000 (2.360)	700 (3.556)	5.4	24 (609.6)
360	360,000 (105.5)	366.0 (165.8)	1500 (139.4)	120 (49)	1/2 (.373)	1100	5500 (2.596)	1000 (5.080)	5.4	24 (609.6)

Performance based on 2# steam pressure (13.8 kpa) at heater with air entering @ 60°F (16°C).

For Sound Ratings See Pages 7 & 9.

Use conversion Table on page 3 for all metric conversions.

*For the lower output, an optional Speed Controller must be ordered.

†Stated AMP is full load for the standard motors. AMP draw varies by motor manufacturer ± 0.2 AMPS. Please see your unit's motor data plate for exact (FLA) Full Load Amp rating. Additional motor data is shown on page 10.

STEAM CALCULATIONS AND CORRECTION FACTORS

		EXAMPLE: – UNIT SIZE: _____24 Steam Pressure ___10 PSI Entering Air Temp. __ 40°F
I. CAPACITY A. For 2 lbs. steam, 60° entering air	Read output directly from Table 3, 24,000 BTU/HR. (Ref., Std. 24).	
B. For higher steam pressures and/or E.A.T.'s above or below 60°F	Multiply output from Table 3 by appropriate correction factor from Table 4 (below).	24,000 x 1.29 = 30,960 BTU/HR.
II. FINAL AIR TEMPERATURE A. For 2 lbs. steam, 60° entering air	Read temperature directly from Table 3, 109°F. (Ref., Std. 24).	
B. For capacities calculated in I.B. (above)	$\frac{\text{Output from I.B.}}{1.085 \times \text{CFM from Table 3}}$ + E.A.T. = Final Air Temp.	$\frac{30,960}{1.085 \times 450}$ + 40 = 103.4°F.
III. FINAL AIR VOLUME A. For 2 lbs. steam, 60° entering air	$\frac{460 + \text{Final Air Temp from Table 3}}{530}$ x Nom. CFM from Table 3 = Final Air Volume	$\frac{460+109}{530}$ x 450 = 483 CFM
B. For final air temperatures calculated in II. B. (above)	$\frac{460 + \text{Final Air Temp from II.B.}}{530}$ x Nom. CFM from Table 3 = Final Air Volume	$\frac{460+103.4}{530}$ x 450 = 478 CFM
IV. CONDENSATE PER HOUR A. For 2 lbs. steam, 60° entering air	Read lbs. per hour from Table 3, 24.5 LBS./HR. (Ref., Std. 24).	
B. For capacities calculated in I.B. (above)	$\frac{\text{Output from I.B.}}{\text{Latent Heat From Table 5}}$ = lbs. per hour of condensate	$\frac{30,960}{953}$ = 32.5 LBS./HR.

TABLE 4 — STEAM CORRECTION FACTORS BASED ON 2 PSI (13.8 kPa) STEAM AND 60 Deg. F (16 Deg. C) E.A.T.

ENTERING AIR TEMPERATURE Deg. F (Deg. C)	STEAM PRESSURE (SATURATED) — LBS. PER SQ. IN. (kPa)												
	0 (0)	2 (13.8)	5 (34.5)	10 (68.9)	15 (103.4)	20 (137.9)	30 (206.8)	40 (275.8)	50 (344.7)	75 (517.1)	100 (689.4)	125 (861.8)	150 (1,034.1)
30 -(1)	1.19	1.24	1.29	1.38	1.44	1.50	1.60	1.68	1.70	1.90	2.02	2.11	2.20
40 (4)	1.11	1.16	1.21	1.29	1.34	1.42	1.51	1.60	1.66	1.81	1.93	2.02	2.11
50 (10)	1.03	1.08	1.13	1.21	1.28	1.33	1.43	1.51	1.58	1.72	1.84	1.93	2.02
60 (16)	0.96	1.00	1.05	1.13	1.19	1.25	1.35	1.43	1.50	1.64	1.75	1.84	1.93
70 (21)	0.88	0.93	0.97	1.06	1.12	1.17	1.27	1.35	1.42	1.55	1.66	1.76	1.84
80 (27)	0.81	0.85	0.90	0.98	1.04	1.10	1.19	1.27	1.34	1.47	1.58	1.68	1.76
90 (32)	0.74	0.78	0.83	0.91	0.97	1.02	1.12	1.19	1.26	1.39	1.50	1.59	1.67
100 (38)	0.67	0.71	0.76	0.84	0.89	0.95	1.04	1.12	1.19	1.32	1.42	1.51	1.59

TABLE 5 — PROPERTIES OF SATURATED STEAM

	STEAM PRESSURE IN PSIG (kPa)												
Steam Pressure psi (kPa)	0 (0)	2 (13.8)	5 (34.5)	10 (68.9)	15 (103.4)	20 (137.9)	30 (206.8)	40 (275.8)	50 (344.7)	75 (517.1)	100 (689.4)	125 (891.8)	150 (1,034.1)
Steam Temperature Deg. F (Deg. C)	212 (100)	218.5 (103.6)	227.1 (108.4)	239.4 (115.2)	249.8 (121.0)	258.8 (126.0)	274.0 (134.4)	286.7 (141.5)	297.7 (147.6)	319.9 (159.9)	337.9 (169.9)	352.9 (178.3)	365.9 (185.5)
Latent Heat of Steam Btu/lbm (KJ/Kg)	970 (2256)	966 (2247)	961 (2235)	953 (2217)	946 (2200)	940 (2186)	929 (2161)	920 (2140)	912 (2121)	891 (2072)	881 (2049)	868 (2019)	857 (1993)

HOT WATER PERFORMANCE DATA

Table 6 - Serpentine and Header Type Models

Unit Size	Output BTU/ HR* (kW)	Flow Rate GPM (L/s)	Final Air Deg. °F (Deg. °C)	Prssr. Drop FT./H_2O (m/water)	Motor HP (kW)	RPM	Nominal CFM (m^3/s)	Outlet FPM (m/s)	Nom. Amps @ 115VAC†	Sound Rating
108A	8,030 (2.4)	0.8 (.050)	91 (33)	0.80 (.244)	16 Watts	1550	245 (.116)	250 (1.270)	0.80	II
	6,800 (2.0)		90 (32)			1350	210 (.099)	215 (1.092)		I
118A	18,400 (5.4)	1.9 (.120)	94 (34)	2.20 (.671)	16 Watts	1550	500 (.236)	500 (2.540)	0.80	II
	15,650 (4.6)		96 (36)			1350	420 (.198)	420 (2.134)		I
125A	24,800 (7.3)	2.5 (.158)	102 (39)	2.20 (.671)	25 Watts	1550	580 (.274)	590 (2.997)	1.2	II
	21,230 (6.2)		106 (41)			1350	460 (.217)	450 (2.286)		I
136A	35,900 (10.5)	3.6 (.227)	99 (37)	3.00 (.914)	1/20 (.037)	1000	850 (.401)	550 (2.794)	1.4	II
	32,300 (9.5)		100 (38)			900	750 (.354)	480 (2.438)		I
18	13,050 (3.8)	1.3 (.082)	95 (35)	0.005 (.002)	16 Watts	1550	395 (.186)	395 (2.007)	0.80	II
	11,725 (3.4)		99 (37)			1350	350 (.165)	350 (1.778)		I
24	17,400 (5.1)	1.8 (.114)	96 (36)	0.014 (.004)	16 Watts	1550	450 (.212)	450 (2.286)	0.80	II
	15,600 (4.6)		98 (37)			1350	380 (.179)	380 (1.930)		I
36	26,100 (7.6)	2.7 (.170)	103 (39)	0.09 (.027)	25 Watts	1550	550 (.260)	550 (2.794)	1.2	II
	23,500 (6.9)		103 (39)			1350	480 (.227)	480 (2.438)		I
48	34,800 (10.2)	3.5 (.221)	103 (39)	0.12 (.037)	1/20 (.037)	1000	750 (.354)	550 (2.794)	1.4	II
	31,300 (9.2)		111 (44)			900	630 (.297)	460 (2.337)		I
60	43,600 (12.8)	4.4 (.278)	105 (41)	0.17 (.052)	1/20 (.037)	1000	900 (.425)	650 (3.302)	1.4	II
	39,200 (11.5)		112 (44)			900	700 (.330)	510 (2.591)		I
72	52,300 (15.3)	5.3 (.334)	104 (40)	0.23 (.070)	1/20 (.037)	1000	1100 (.519)	800 (4.064)	1.4	II
	47,000 (13.8)		106 (41)			900	950 (.448)	700 (3.556)		I
84	61,000 (17.9)	6.1 (.385)	100 (38)	0.24 (.073)	1/12 (.062)	1000	1400 (.661)	900 (4.572)	2.2	III
	54,900 (16.1)		106 (41)			900	1100 (.519)	750 (3.810)		II
96	69,700 (20.4)	7.0 (.442)	106 (41)	0.29 (.088)	1/12 (.062)	1000	1400 (.661)	930 (4.724)	2.2	III
	62,700 (18.4)		113 (45)			900	1100 (.519)	800 (4.064)		II
108	78,400 (23.0)	7.9 (.498)	100 (38)	0.36 (.110)	1/12 (.062)	1000	1800 (.850)	1000 (5.080)	2.2	III
	70,500 (20.7)		103 (39)			900	1500 (.708)	900 (4.572)		II
120	87,100 (25.5)	8.8 (.555)	102 (39)	0.39 (.119)	1/3 (.249)	1140	1900 (.897)	900 (4.572)	4.5	III
132	95,800 (28.1)	9.6 (.606)	104 (40)	0.41 (.125)	1/3 (.249)	1140	2000 (.944)	950 (4.826)	4.5	IV
144	104,000 (30.5)	10.4 (.656)	104 (40)	0.43 (.131)	1/3 (.249)	1140	2200 (1.038)	1000 (5.080)	4.5	IV
156	113,000 (33.1)	11.3 (.713)	100 (38)	0.53 (.162)	1/3 (.249)	1140	2600 (1.227)	1150 (5.842)	4.5	IV
180	118,000 (34.6)	11.8 (.744)	110 (43)	0.6 (.183)	1/3 (.249)	1140	2200 (1.038)	800 (4.064)	4.5	III
204	148,000 (43.4)	14.9 (.940)	107 (42)	0.79 (.241)	1/3 (.249)	1140	2900 (1.369)	1000 (5.080)	4.5	IV
240	174,000 (51.0)	17.4 (1.098)	106 (41)	1.06 (.323)	1/3 (.249)	1140	3500 (1.652)	900 (4.572)	4.6	IV
280	209,100 (61.3)	21.0 (1.325)	106 (41)	1.33 (.405)	1/2 (.373)	1100	4200 (1.982)	980 (4.978)	5.4	IV
300	230,000 (67.4)	23.0 (1.451)	102 (39)	2.1 (.640)	1/2 (.373)	1100	5000 (2.360)	700 (3.556)	5.4	IV
360	261,300 (76.6)	26.2 (1.653)	103 (39)	2.1 (.640)	1/2 (.373)	1100	5500 (2.596)	1000 (5.080)	5.4	IV

Performance based on 200°F (93°C) EWT, 60°F (16°C) E.A.T., 20°F (11°C)TD.

For Fan Diameter See Page 4.

Use conversion Table on page 3 for all metric conversions.

*For the lower output, an optional Speed Controller must be ordered.

†Stated AMP is full load for standard motors. AMP draw varies by motor manufacturer ± 0.2 AMPS. Please see your unit's motor data plate for exact (FLA) Full Load Amp rating. Additional motor data is shown on page 10.

HOT WATER CALCULATIONS AND CORRECTION FACTORS

		EXAMPLE: – UNIT SIZE: 24 Entering Water Temp. 160°F Entering Air Temp. 40°F Water Temperature Drop 10°F
I. CAPACITY @ 20°TD: A. For 200° EWT, 60° EAT	Read output directly from Table 6, 17,400 BTU/HR (Ref., Std. 24).	
B. For EWT and/or EAT above or below Standard	Multiply output from Table 6 by factor from Table 7 (below).	17,400 x .878 = 15,277 BTU/HR.
II. CAPACITY AT OTHER TD's A. For TD's from 5 to 60°F	Multiply output obtained in IA. or IB. (above) by appropriate factor from Table 8 (below)	IA - 17,400 x 1.15 = 20,010 BTU/HR. –OR– IB - 15,277 x 1.15 = 17,569 BTU/HR.
III. GPM AT OTHER TD's A. For TD's from 5 to 60°F	Multiply GPM of unit for 20° TD, from Table 6 by appropriate factor from Table 8 (below).	1.8 x 2.30 = 4.14 GPM (Applies only to units with Std. 200° EWT, 60° EAT.) For all others calculate using formula – $GPM = \frac{BTU}{500 \times TD}$
IV. CAPACITY AT OTHER RATES OF WATER FLOW	Multiply output from Table 6 by factor from Table 10 (below).	
V. PRESSURE LOSS AT OTHER TD's A. For TD's from 5 to 60°F	Multiply P.D. of unit for 20° TD, from Table 6 by appropriate factor from Table 8 (below).	.014 x 5.00 = .07 Ft. H_2O

TABLE 7 — HOT WATER CONVERSION FACTORS BASED ON 200° (93°C) ENTERING WATER, 60° (16°C) ENTERING AIR AND 20° (11°C) TEMPERATURE DROP

ENTERING AIR TEMPERATURE °F (°C)	ENTERING WATER TEMPERATURE — °F (°C)										
	100° (38)	120° (49)	140° (60)	160° (71)	180° (82)	200° (93)	220° (104)	240° (116)	260° (127)	280° (138)	300° (149)
30 -(1)	0.518	0.666	0.814	0.963	1.120	1.268	1.408	1.555	1.702	1.850	1.997
40 (4)	0.439	0.585	0.731	0.878	1.025	1.172	1.317	1.464	1.609	1.755	1.908
50 (10)	0.361	0.506	0.651	0.796	0.941	1.085	1.231	1.375	1.518	1.663	1.824
60 (16)	0.286	0.429	0.571	0.715	0.857	1.000	1.143	1.286	1.429	1.571	1.717
70 (21)	0.212	0.353	0.494	0.636	0.777	0.918	1.060	1.201	1.342	1.483	1.630
80 (27)	0.140	0.279	0.419	0.558	0.698	0.837	0.977	1.117	1.257	1.397	1.545
90 (32)	0.069	0.207	0.345	0.483	0.621	0.759	0.897	1.035	1.173	1.311	1.462
100 (38)	0.000	0.137	0.273	0.409	0.546	0.682	0.818	0.955	1.094	1.230	1.371

TABLE 8 — HOT WATER OUTPUT, FLOW RATE AND PRESSURE LOSS FACTORS BASED ON STANDARD CONDITIONS OF 200°F (93°C) ENTERING WATER, 60°F (16°C) ENTERING AIR & 20°F (11°C) WATER DROP

USE FACTORS FROM THIS TABLE TO OBTAIN APPROXIMATE RESULTS	TEMPERATURE DROP °F (°C)								
	5 (3)	10 (6)	15 (8)	20 (11)	25 (14)	30 (17)	40 (22)	50 (28)	60 (33)
To obtain output for other Water Temperature Drops, multiply basic output rating by applicable Factor.	1.25	1.15	1.08	1.00	.94	.90	.83	.76	.72
To obtain flow for other Water Temperature Drops, multiply basic rate rating by applicable Factor.*	5.00	2.30	1.44	1.00	.74	.59	.40	.30	.24
To obtain Pressure Loss Feet (Meters) of Water for other temperature Drops, multiply Basic loss at 20°F (11°C) drop by Factor.	10.00	5.00	2.00	1.00	.60	.40	.20	.13	.07

*TABLE 9 — MINIMUM WATER FLOW

MODEL No.	108A	118A	125A	136A	18	24	36	48	60	72	84	96
MINIMUM GPM (L/s)	0.125 (.008)	0.125 (.008)	0.125 (.008)	0.125 (.008)	0.750 (.047)	1.240 (.078)	1.240 (.078)	1.490 (.094)	1.490 (.094)	1.620 (.102)	1.860 (.117)	3.350 (.211)
MODEL No.	108	120	132	144	156	180	204	240	280	300	360	
MINIMUM GPM (L/s)	3.35 (.211)	3.60 (.227)	4.09 (.258)	4.09 (.258)	4.09 (.258)	4.34 (.274)	4.34 (.274)	4.59 (.290)	4.59 (.290)	6.08 (.384)	6.08 (.384)	

*TABLE 10 — HEATING CAPACITY FACTORS FOR VARIOUS RATES OF WATER FLOW

% of Rated Water Flow	25%	50%	75%	100%	125%	150%	175%
Heating Capacity Factor	.80	.89	.96	1.00	1.04	1.07	1.10

TECHNICAL DATA

The performance data listed in Table 6 includes sound ratings. The ratings provide a guide in determining the acceptable degree of loudness in particular occupancy situations.

Certain general rules apply to specific selection of unit heaters with regard to degree of quietness (or loudness);

- The greater the fan diameter, the higher the sound level.
- The higher the motor RPM, the higher the sound level. Note that on most units the lower the speed mode results in lowering the sound rating one increment.
- Selecting a larger number of smaller units generally results in lower overall noise levels than fewer large units.

All horizontal steam and hot water unit heater motors, whether fan guard or shelf-mounted, are isolated from the mechanical mount by resilient isolators. This mounting along with balanced fan blades and excellent overall construction integrity, assures you the utmost in quiet operation.

The following table outlines sound ratings for various applications. The lower the number, the quieter the unit and the lower the sound requirement.

CATEGORY OF AREA	SOUND RATING
Apartment, assembly hall, classrooms churches, courtrooms, executive offices, hospitals, libraries, museums, theatres.	I
Dining rooms, general offices, recreation areas, small retail stores.	II
Restaurants, banks, cafeterias, department stores, public buildings, service stations.	III
Gymnasiums, health clubs, laundromats, supermarkets.	IV
Garages, small machine shops, light manufacturing.	V
Factories, foundries, steel mills.	III - VII*

*Depending on specific use in these facilities, size of operation, etc.

CORRECTIONS WHEN USING GLYCOL SOLUTION IN SYSTEM

		Propylene Glycol
1. Heat transfer @180°F (82°C) with no increase in flow rate	20% solution	.97*
	50% solution	.90*
2. G.P.M. Req'd. @180°F (82°C), 20°F (11°C) Δ t (no correction to pump curve)		1.10%*
3. Pump Head Req'd. @180°F (82°C) w/increase in G.P.M.		1.23%*
4. Specify gravity (water = 1.0)		1.045-1.055*
5. Pounds/Gallons @60°F (16°C) (water = 8.3453 Pound/Gallon)		8.77
6. pH @ 50% by volume		9.5

		Propylene Glycol
7. Freezing Point	55% by volume	-
	50%	-28°F (-33°C)
	40%	-13°F (-25°C)
	30%	+ 4°F (-16°C)
	20%	+17°F (- 8°C)

*Compared to water.

Approximate factors at varying altitudes	
Altitude	**Factor**
Sea level - 1000 ft. (305m)	1.00
1000 ft. - 3000 ft. (915m)	.958
3000 ft. - 5000 ft. (1524m)	.929
5000 ft. - 7000 ft. (2134m)	.900
7000 ft. - 10000 ft. (3048m)	.871

MOTOR DATA

NOTE 1: All motors are constant speed and operate at top speed as indicated in motor data. Models 18 through 108, including 108A, 118A, 125A and 136A can be run at reduced speed with addition of optional variable speed switch. This switch is factory-calibrated for low and high speed ratings, with intermediate speeds infinitely controllable. Models 120 through 360 operate at constant speed as indicated in motor data. All 1/4 H.P. motors are P.S.C.

NOTE 2: Motors under 1/3 H.P. are totally enclosed, frame mounted, 115/1/60 with thermal overload protection and permanently lubricated sleeve bearings with optional speed controller available. 1/3 H.P. (115/1/60) motors are open frame constant speed with thermal over-load protection and ball bearings. 1/3 H.P. (230V) and 1/2 H.P. (230V) motors are open frame constant speed with thermal overload protection and ball bearings.

NOTE 3: 1/3 and 1/2 H.P. motors are available as 230V single and 3 phase in open frame and explosion-proof housings, all available as options. 1/3 and 1/2 H.P. motors operate at single speed only.

NOTE 4: Stated AMP draw is Full Load Amp (FLA). AMP draw varies by motor manufacturer ± 0.2 AMPS. Verify FLA per unit motor data plate.

⚠ CAUTION **Select appropriate AMP, MCA, and MOP for the multiple voltage motors. For example, the AMP, MCA, and MOP for Models 360 with a 460 volt Totally Enclosed motor is 1.3, 1.6 and 2.9 respectively.**

NOTICE: Also refer to Maintenance section for additional motor data.

Table 11 - TOTALLY ENCLOSED MOTOR TYPE

Unit Model No.	AMP	MCA	MOP	HP	RPM
115/1/60					
18, 24, 108A, 118A	0.8	1	1.8	16W*	1550
136A	1.4	1.8	3.2	1/20*	1000
36, 125A	1.2	1.5	2.7	25W*	1550
48, 60, 72	1.4	1.8	3.2	1/20*	1000
84, 96,108	2.2	2.8	5.0	1/12*	1000
120, 132, 144 156, 180, 204 240	4.5	5.6	10.1	1/3	1140
280, 300, 360	5.4	6.8	12.2	1/2	1100
230/1/60					
18, 24, 108A, 118A	0.4	0.5	0.9	16W	1550
136A	1.4	1.8	3.2	1/20†	1000
36, 125A	0.6	0.8	1.4	25W	1550
48, 60, 72	1.4	1.8	3.2	1/20†	1000
84, 96,108	2.2	2.8	5.0	1/12†	1000
120, 132, 144, 156,180, 204, 240	4.5	5.6	10.1	1/3†	1140
280, 300, 360	5.4	6.8	12.2	1/2†	1100
208-230/460/3/60					
48, 60, 72, 84, 96, 108, 120, 132, 144, 156, 180, 204, 240 280, 300, 360	2.6-2.6/1.3	3.3-3.3/1.6	5.9-5.9/2.9	1/2**	1140

*Optional variable speed switch is available.
**These motors are without thermal overload protection.
†230/1/60 unit has 115/1/60 motor supplied with field installed stepdown transformer.

Table 12 - EXPLOSION PROOF WITH THERMAL OVERLOAD MOTOR TYPE

Unit Model No.	AMP	MCA	MOP	HP	RPM	AMP	MCA	MOP	HP	RPM
	115/1/60					230/460/3/60				
48, 60, 72, 84, 96, 108, 120, 132	3.7	4.6	8.3	1/6†	1140	—	—	—	—	—
144, 156, 180, 204	5.4	6.8	12.2	1/4†	1140	2.2/1.1	2.8/1.4	5.0/2.5	1/3	1140
240, 280, 300	7.4-3.7	9.3-4.7	16.7-8.3	1/3***	1140	2.2/1.1	2.8/1.4	5.0/2.5	1/3	1140
360	7.4-3.7	9.3-4.7	16.7-8.3	1/2***	1140	2.2/1.1	2.8/1.4	5.0/2.5	1/3	1140

***These motors are 115/230 volts.
†230/1/60 unit has 115/1/60 motor supplied with field installed stepdown transformer.

LOCATION

It is assumed that the design engineer has selected, sized, and located in the area to be heated. However, the information given here may be of additional help to the installer. These sketches indicate suggested basic locations for different types of unit heaters.

Horizontal unit heaters should be located to give a circulatory motion, preferably in the outer perimeter of the building. The units should be spaced to properly blanket the areas with warm air.

The unit should be suspended from connections provided in the unit by means of rods. The rods should then be attached to solid supports of the building.

Figure 5

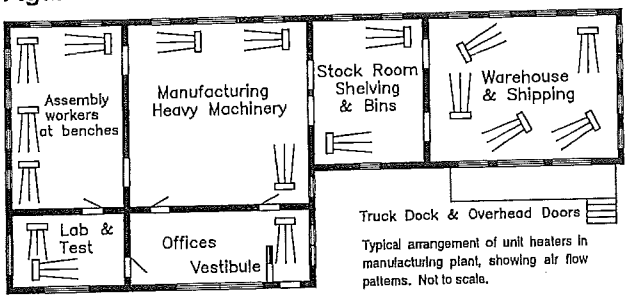

Typical arrangement of unit heaters in manufacturing plant, showing air flow patterns. Not to scale.

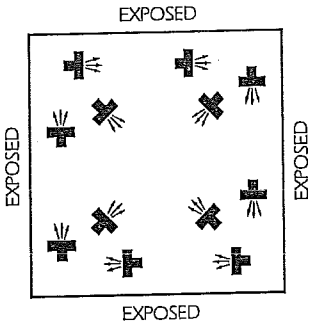

A large square area with exposed walls and roof; units are blanketing all exposed surfaces.

A narrow area with four exposed walls either with or without roof exposure.

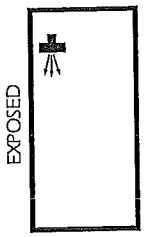

A small area with exposed walls requiring one unit.

Figure 6
MOUNTING HEIGHT AND APPROX. HEAT THROW
Based on 2 PSI (13.8 kPa) steam pressure and 60°F (16°C) entering air temperature

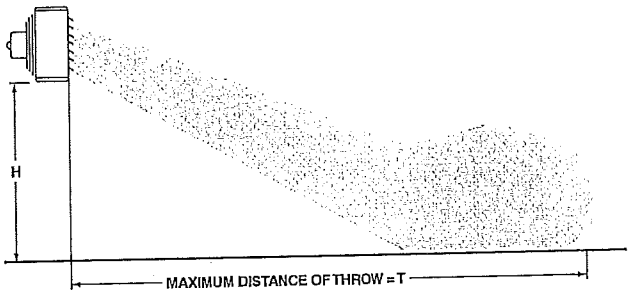

Table 13

Model No.	Maximum Mounting HT. ft (m)	Approx. Max. Throw ft (m)
108A	8 (2.4)	20 (6.1)
118A	8 (2.4)	25 (7.6)
125A	9 (2.7)	29 (8.8)
136A	9 (2.7)	29 (8.8)
18	8 (2.4)	20 (6.1)
24	8 (2.4)	24 (7.3)
36	9 (2.7)	28 (8.5)
48	9 (2.7)	30 (9.1)
60	10 (3.0)	30 (9.1)
72	10 (3.0)	29 (8.8)
84	10 (3.0)	30 (9.1)
96	11 (3.4)	38 (11.6)
108	11 (3.4)	40 (12.2)
120	12 (3.7)	40 (12.2)
132	13 (4.0)	54 (16.5)
144	13 (4.0)	55 (16.8)
156	13 (4.0)	55 (16.8)
180	13 (4.0)	53 (16.2)
204	13 (4.0)	55 (16.8)
240	14 (4.3)	57 (17.4)
280	14 (4.3)	57 (17.4)
300	15 (4.6)	58 (17.7)
360	15 (4.6)	60 (18.3)

INSTALLATION

UNIT MOUNTING

Install unit heaters to meet Occupational Safety and Health Act (OSHA) and CSA requirements. Unit heaters mounted lower than 8 feet (2.4m) from the floor must be equipped with an OSHA fan guard.

NOTICE: Units equipped with the motor mounted to the fan guard require two point suspension. Units equipped with a shelf mounted motor are required to be suspended at four points. Refer to Figures 3 and 4 for two point suspension and refer to Figure 6A for four point suspension.

⚠ CAUTION **Unit heaters must be hung level from side to side and from front to back. Failure to do so will result in poor performance and/or premature failure of the unit.**

⚠ WARNING **Make certain that the lifting methods used to lift the heater and the method of suspension used in the field installation of the heater are capable of uniformly supporting the weight of the heater at all times. Failure to heed this warning may result in property damage or personal injury!**

⚠ WARNING **Insure that all hardware used in the suspension of each unit heater is more than adequate for the job. Failure to do so may result in extensive property damage, severe personal injury, or death!**

⚠ WARNING **Make sure that the structure to which the unit heater is to be mounted is capable of safely supporting its weight. Under no circumstances must the gas lines, the venting system or the electrical conduit be used to support the heater; or should any other objects (i.e. ladder, person) lean against the heater gas lines, venting system or the electrical conduit for support. Failure to heed these warnings may result in property damage, personal injury, or death.**

Nutserts are provided at the top of all units for suspension purposes. Support rods should support the total unit weight to assure that no strain is placed on supply and return piping. Provisions for removal of the unit from the suspension rods may be desirable for servicing purposes.

Units must hang level vertically and horizontally.

Provide sufficient clearance around units for maintenance purposes.

Isolators are not required but may be desirable for some applications. Refer to "Dimensional Data" in Tables 1 and 2.

PIPING

To provide proper coil operation, follow all piping recommendations listed in this manual.

See Figures 7 through 11 for proper pipe connections.

Follow standard practices and codes when installing the piping. Provide swing joints for expansion purposes, unions and shut-off valves for servicing purposes and as illustrated in Figures 7 through 11, valves and traps for control purposes. Use 45 degree angle run-offs from all supply and return mains.

Dirt pockets should be the same pipe size as the return tapping of the unit heater. Also, pipe size in the branch-off should be the same size as the tapping in the traps. Beyond the trap, the return lateral pipe should be increased one size up to the return main.

It is assumed that the design engineer has selected the type of system to be used. The sketches shown are for different types of steam systems or hot water systems. For sizing of piping, traps, filter, etc., consult ASHRAE guides of the manufacturer's literature on these products.

It is important that the system be kept clean. Care should be exercised that excessive joint materials or foreign substances be kept out of the system.

On steam systems it is recommended that the unit be installed level for proper condensate drainage. Swing joints should be used in piping, and pipes should be pitched down from units so that condensate can drain freely.

Figure 6A
Four Point
Suspension -
Shelf Mounted
Motors Only

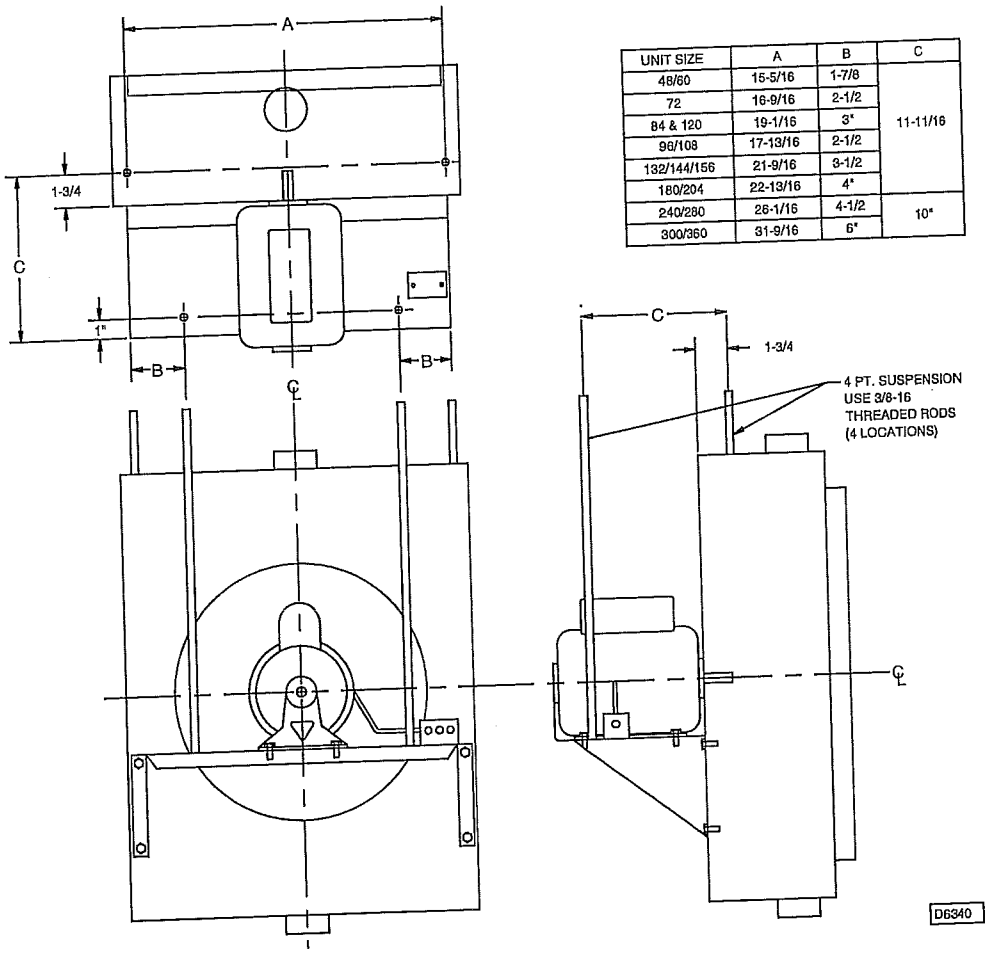

UNIT SIZE	A	B	C
48/60	15-5/16	1-7/8	11-11/16
72	16-9/16	2-1/2	
84 & 120	19-1/16	3"	
96/108	17-13/16	2-1/2	
132/144/156	21-9/16	3-1/2	
180/204	22-13/16	4"	
240/280	26-1/16	4-1/2	10"
300/360	31-9/16	6"	

Figure 7
Forced
Hot Water

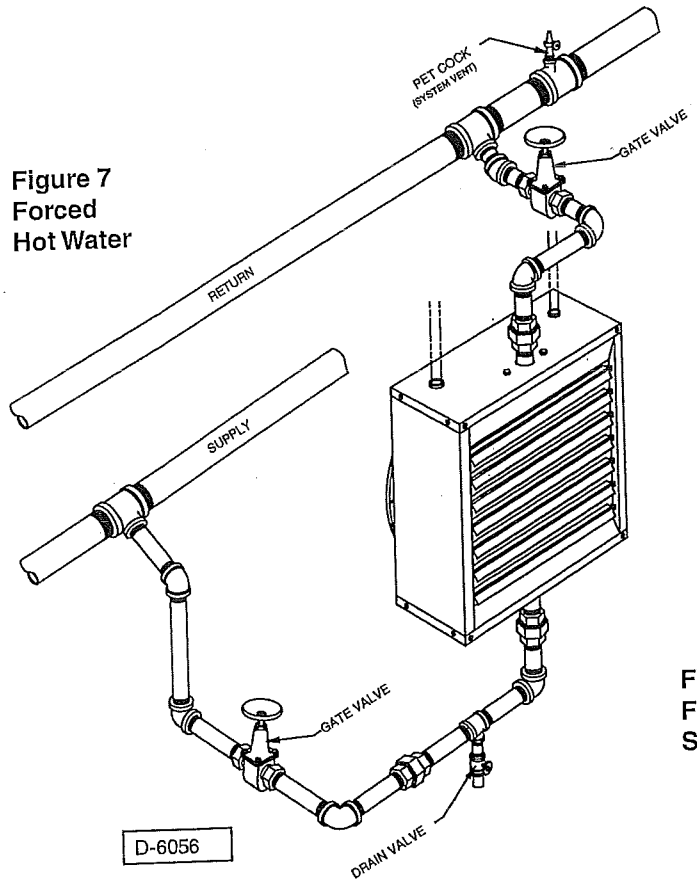

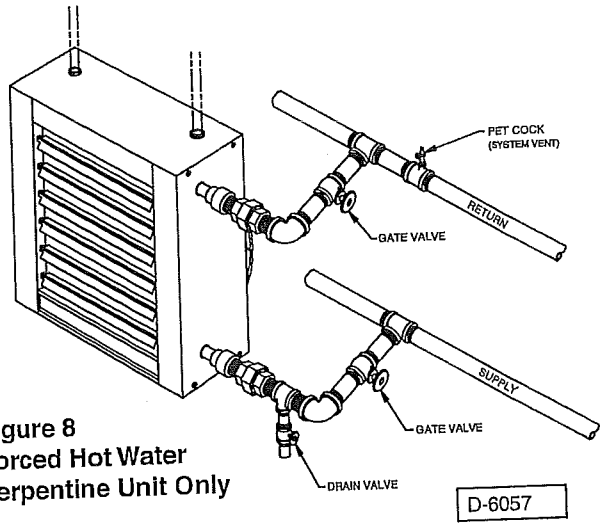

Figure 8
Forced Hot Water
Serpentine Unit Only

Figure 9
High Pressure
Steam

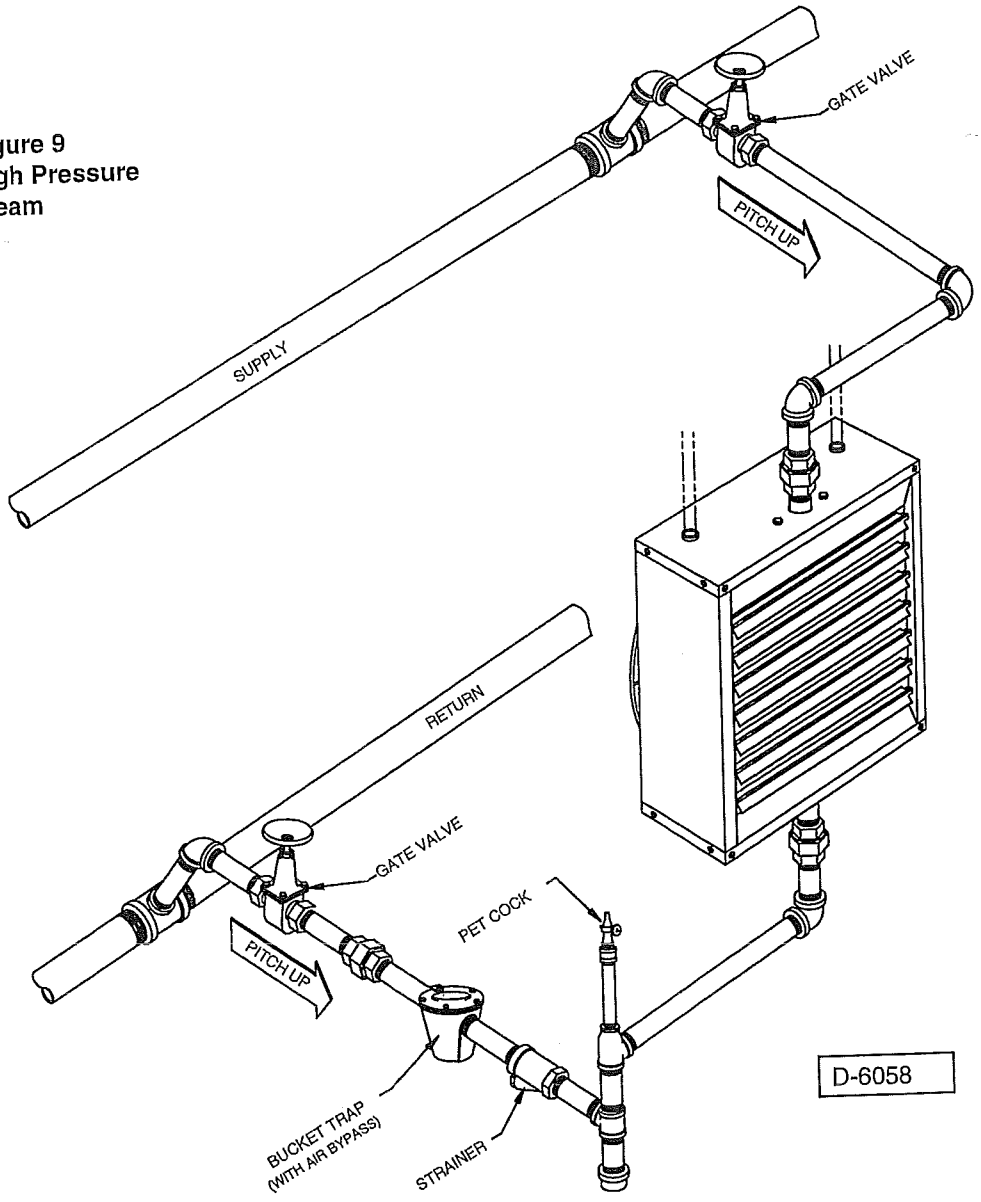

Figure 10
Low Pressure
Steam Gravity

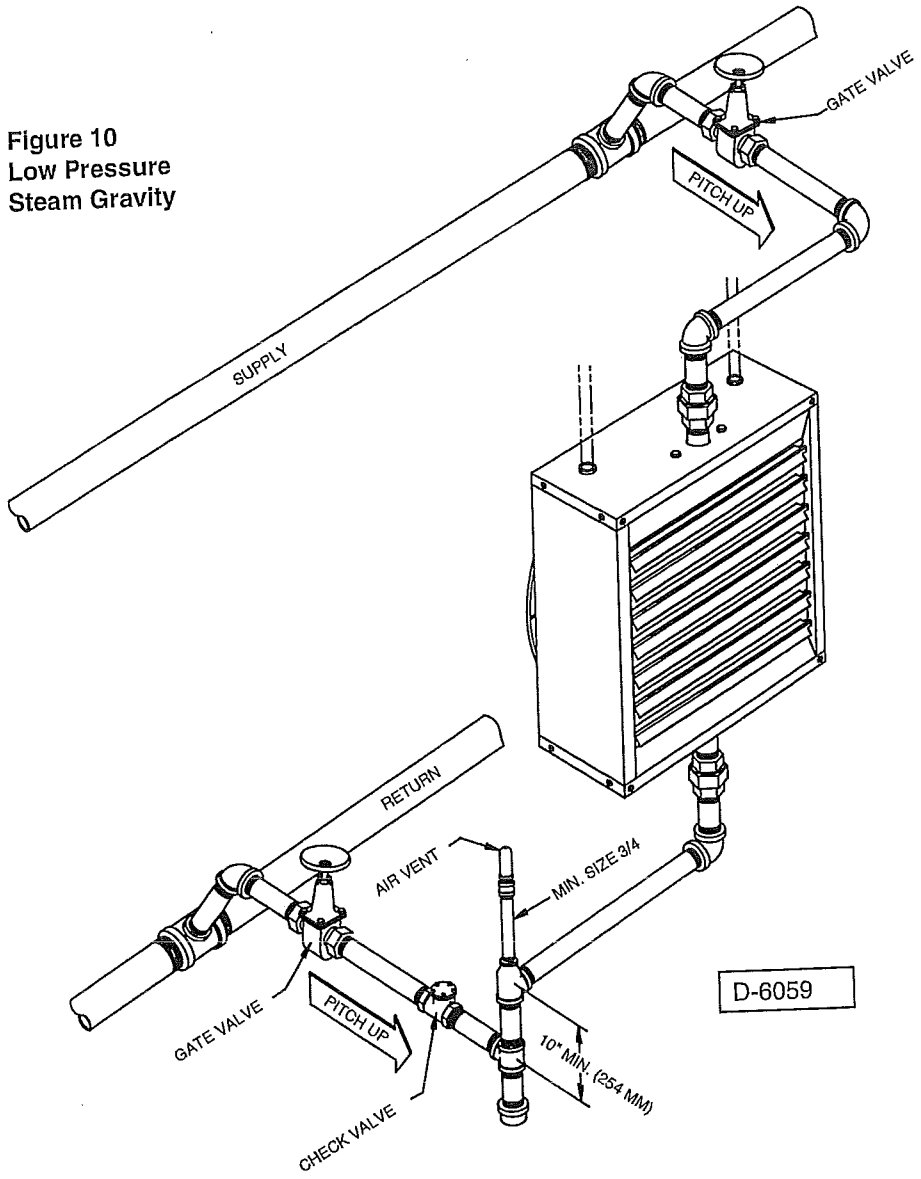

Figure 11
Low Pressure
Vapor Or Vacuum

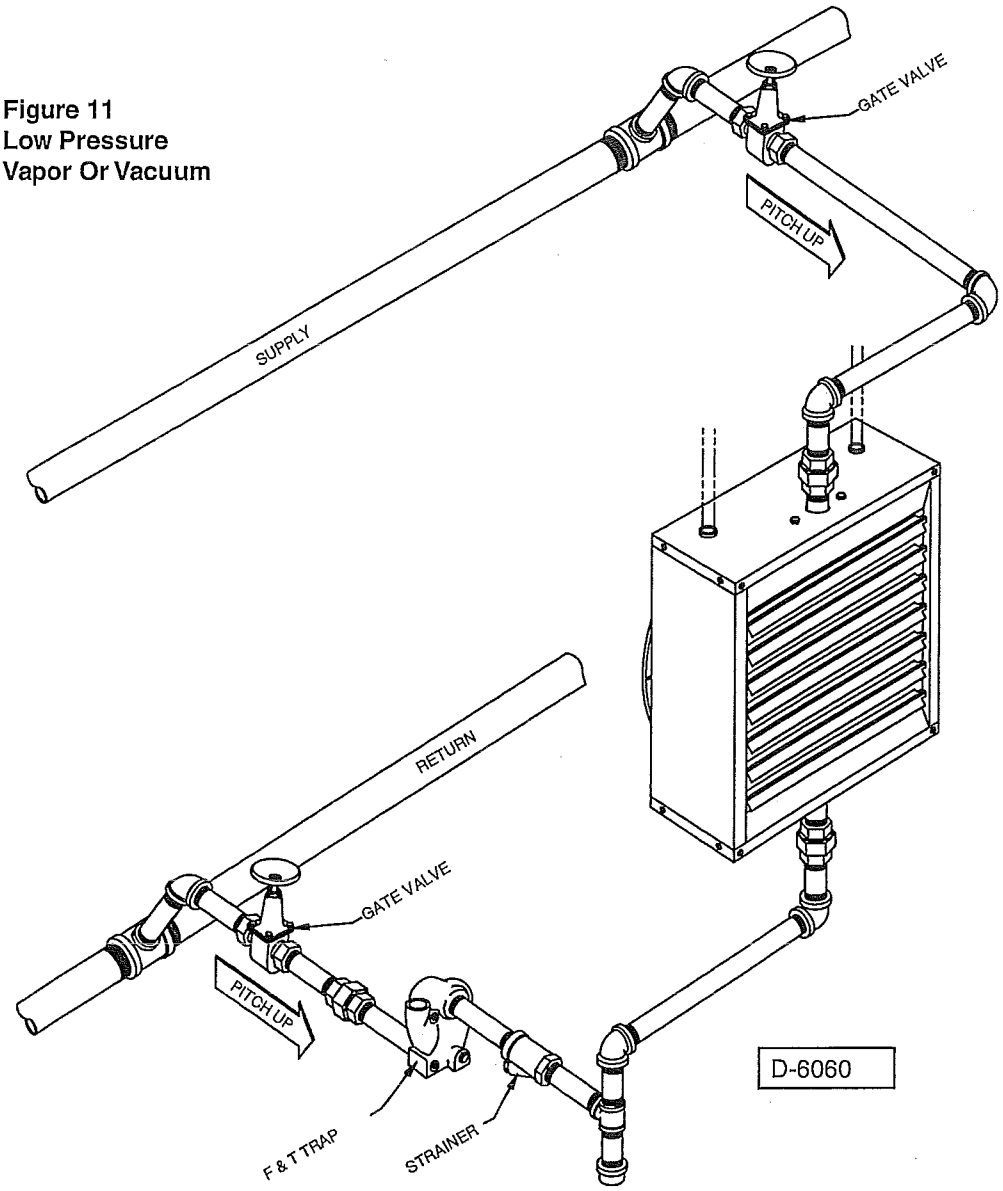

ELECTRICAL CONNECTIONS

⚠WARNING

HAZARDOUS VOLTAGE!
DISCONNECT ALL ELECTRIC POWER INCLUDING REMOTE DISCONNECTS BEFORE SERVICING. Failure to disconnect power before servicing can cause severe personal injury or death.

Standard units are shipped for use on 115 volt, 60 hertz single phase electric power. The motor nameplate and electrical rating on the transformer should be checked before energizing the unit heater electrical system. All external wiring must conform to ANSI/NFPA No. 70-2006, National Electrical Code (or the latest edition) and applicable current local codes; in Canada, to the Canadian Electrical Code, Part 1 CSA Standard C22.1.

⚠CAUTION **Do not use any tools (i.e. screwdriver, pliers, etc.) across the terminals to check for power. Use a voltmeter.**

It is recommended that the electrical power supply to each unit heater be provided by a separate, fused and permanently live electrical circuit. A disconnect switch of suitable electrical rating for each unit heater should be located as close to the controls as possible. Each unit heater must be electrically grounded in accordance with National Electric Code, ANSI/NFPA No. 70-2006 (or the latest edition) or CSA Standard C22.1. Sample wiring connections are depicted in Figures 12 through 22.

OPERATION

Most basic unit heater systems are controlled by a room thermostat. Locate thermostat on inner wall or column so that optimum control can be obtained for that area. Set thermostat for desired temperature.

On steam systems a low limit may be used to prevent fan from blowing cold air unless the heater has steam passing through the coil.

Small hot water systems could have the circulating pump controlled directly by the room thermostat. On large systems, zone valves could be used to control the individual unit heater where constant water circulation is used on the main system.

Horizontal louvers are standard equipment on horizontal unit heaters, vertical louvers are available as an optional accessory.

THERMOSTAT WIRING AND LOCATION

NOTICE: The thermostat must be mounted on a vertical vibration-free surface free from air currents and in accordance with the furnished instructions.

Mount the thermostat approximately 5 feet (1.5 m) above the floor in an area where it will be exposed to a free circulation of average temperature air. Always refer to the thermostat instructions as well as our unit wiring diagram and wire accordingly. Avoid mounting the thermostat in the following locations:

1. Cold areas - Outside walls or areas where drafts may affect the operation of the control.
2. Hot areas - Areas where the sun's rays, radiation, or warm air currents may affect control operation.
3. Dead areas - Areas where air cannot circulate freely, such as behind doors or in corners.

NOTICE: For all wiring connections, refer to the wiring diagram on the motor nameplate (also refer to page 18). Should any original wire supplied with the heater have to be replaced, it must be replaced with wiring material having a temperature rating of at least 105° C.

WIRING INSTALLATION

Figure 12

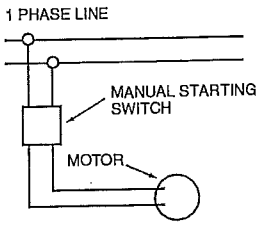

MANUAL CONTROL WITH SINGLE PHASE MOTOR

Figure 13

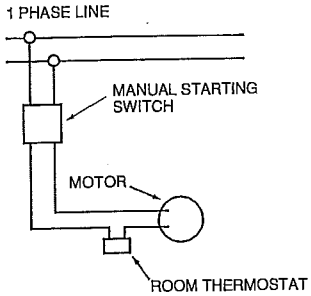

THERMOSTATIC CONTROL WITH MANUAL STARTER

Figure 14

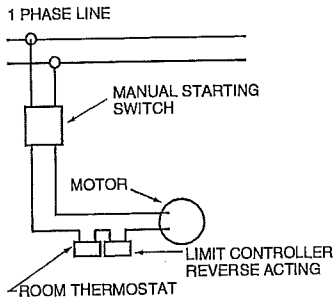

THERMOSTATIC CONTROL WITH REVERSE ACTING CONTROLLER AND MANUAL STARTER

Figure 15

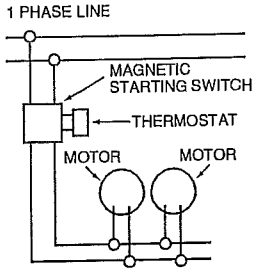

THERMOSTATIC CONTROL USING MAGNETIC STARTER OPERATING SEVERAL UNITS

Figure 16

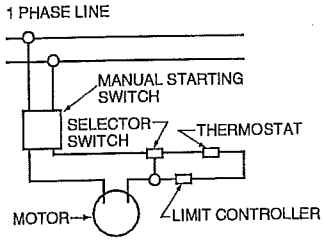

THREE POSITION SELECTOR SWITCH USED FOR EITHER MANUAL OR THERMOSTATIC CONTROL

Figure 17

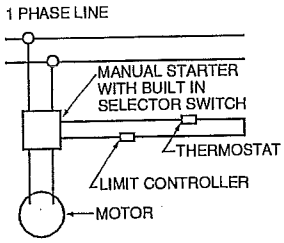

THREE POSITION SELECTOR SWITCH BUILT INTO MAGNETIC STARTER FOR MANUAL OR THERMOSTATIC CONTROL

Figure 18

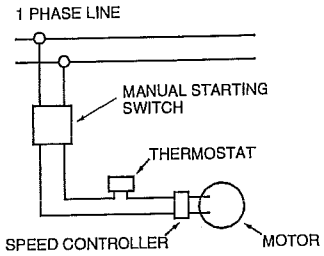

SPEED CONTROLLER WITH MANUAL STARTING SWITCH

Figure 19

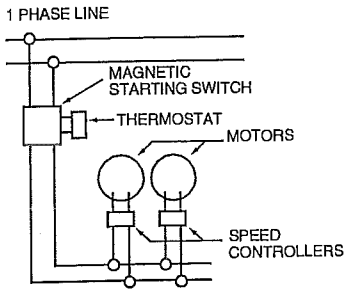

SPEED CONTROLLERS WITH MAGNETIC STARTING SWITCH FOR OPERATING SEVERAL UNITS

Figure 20

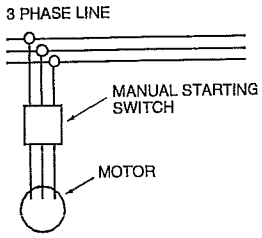

MANUAL CONTROL WITH THREE PHASE MOTOR

Figure 21

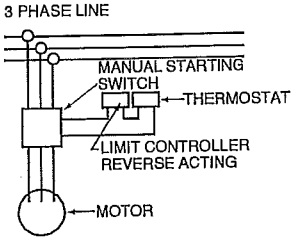

THERMOSTATIC CONTROL WITH LIMIT CONTROLLER FOR THREE PHASE MOTOR

NOTICE

1. When using a speed controller, always locate the thermostat between the speed controller and the line, not between the motor and the controller.
2. For internal wiring and overload protection on all starters, consult the control manufacturer for details.
3. When using thermostatic control with a manual starter, be sure that the electrical rating of the thermostat is sufficient to carry the motor current.

Figure 22

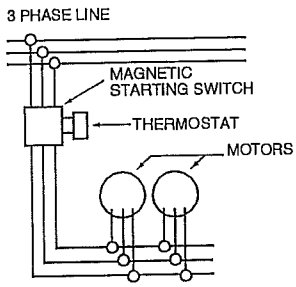

THERMOSTATIC CONTROL OF SEVERAL THREE PHASE UNITS

OPTIONS

VARIABLE SPEED CONTROL

115 Volt Only (optional)

The solid state speed controller may be installed at any convenient location and is suitable for surface or flush type mounting. A Standard electrical single or double gang wall box is recommended as in Figure 23.

Figure 23
Wiring Diagram of Speed Control Installation

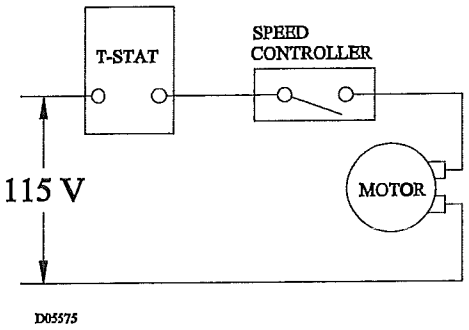

Installation procedure:

1. Attach the control's leads to the electrical leads in the control box using wire nuts. The speed control is to be wired in series with the motor. See wiring diagram in Figure 23.
2. Make certain wire nuts are tight with no copper wire being exposed.
3. Place wires and wire nuts back into box allowing room for the control to fit in box also.
4. Mount speed control to box using number 6 flathead screws provided.

Setting the control:

1. Turn the control shaft fully clockwise. If the motor is not running at the desired low speed, adjust the trim on the face of the control for low speed setting using a small screwdriver.
2. Rotate the control shaft counter clockwise. The speed will increase smoothly from minimum to maximum and then switch off.
3. Mount face plate with screw provided and attach control knob.

STRAP-ON WATER CONTROL

A SPDT strap-on type hot water control with 100° to 240°F (38 to 116°C) rated at 10 amps at 120V is also available. Control can be used for direct or reverse acting applications as high or low limit.

STEAM PRESSURE CONTROL

SPDT switch opens on a rise in pressure. Control is automatically reset, has a range of 0 to 15 PSIG (0 to 103 kPa) and has an adjustable differential. **Other actions, ranges, circuits and manual reset models are available on request.**

HORIZONTAL AND VERTICAL LOUVERS

Horizontal louvers are standard on all models. Vertical louvers are an optional accessory on all models. Vertical louvers are installed on built to order units or shipped loose for field installation.

Figure 24
Horizontal and Vertical Louver Mounting

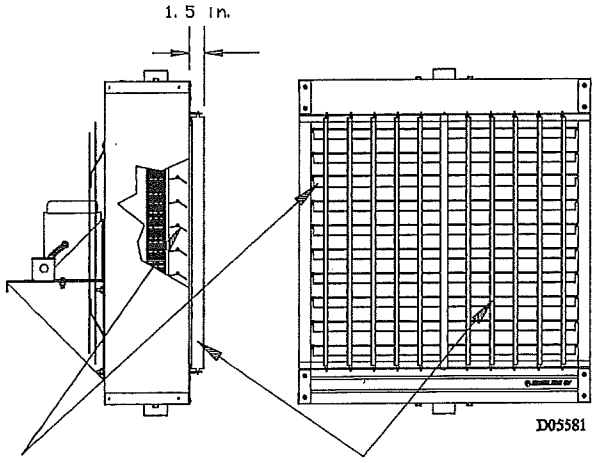

THERMOSTATS

Line voltage wall thermostats are in stock for immediate shipment. All models are SPST with bimetal thermometer, knob-type set point adjustment, 40 to 90°F (5 to 30°C) range and selector switches. Standard duty models with "off-auto" and "auto-off-fan" and a heavy duty model with "auto-off-fan" switching are available. Other models available on request. Plastic tamperproof one size fits all thermostat guards are also available.

MANUAL STARTERS

Single and three-phase models are available. Standard models are single-speed, toggle-operated, NEMA Type 1 and are surface-mounted.

WALL MOUNTED SPEED CONTROLLERS

Units with standard motors up to Model 108 (115/1/60) can be operated at reduced speeds by addition of optional speed controller. Controller is 5 amps, pre-set at factory for maximum and minimum speeds, with intermediate speeds infinitely controllable. All 1/3, 1/2 HP and 230V motors operate only at rated speed and CFM – See Charts.

NOTICE: When using electrical accessories, always refer to the accessory manufacturer's installation manual for proper use, location and wiring instructions.

MAINTENANCE

PERIODIC SERVICE

⚠WARNING Open all disconnect switches and secure in that position before servicing unit. Failure to do so may result in personal injury or death from electrical shock.

Because of the simple design of the steam and hot water unit heaters, they are nearly maintenance free. However, depending on the environment, simple maintenance practices should be adopted.

Periodically check the finned surfaces and vacuum these as often as necessary to remove any accumulation of lint and dirt. Check fan blades and remove dirt accumulation. If fan blades are not cleaned they tend to become unbalanced.

Most of the motors supplied on the unit heaters have either ball bearings or sleeve bearings and should not require lubrication for long periods of time. It is however advisable that motor maintenance and lubrication recommended by the motor manufacturer be followed.

Check motors for dirt and dust accumulation, and remove any accumulation as often as necessary. Open type motors may overheat if the dirt or dust is not removed from ventilation openings.

⚠CAUTION Allow rotating fans to stop before servicing to avoid serious injury to fingers and hands.

MOTOR LUBRICATION

Sleeve Bearings

Motors with oilers or oil holes are lubricated before shipment with a good grade of electric motor oil. Refill when necessary, with the motor at a stand-still, until oil reaches the proper level.

Use SAE 20W non detergent oil for motors operating in ambient temperatures of 32°F to 100°F (0°C to 38°C). Below 32°F (0°C), SAE 10W non detergent oil will be required.

The frequency of oiling will depend upon operating conditions and length of running time. Inspect the oilers or oil holes when cleaning the unit. If the unit has a fractional horse-power motor, lubricate at least once a year. Under high ambient conditions or constant fan operation, fractional horse-power motors should be lubricated every 90 days. On those motors without oilers or oil holes, follow the instructions given on the motor nameplate.

Ball Bearings

Ball bearing motors are pre-lubricated and normally not equipped with grease fittings. However, motors are equipped with removable grease plugs to allow installation of grease fittings if desired by owner. Motor manufacturers do not recommend or require on the job lubrication of ball bearing motors.

If on the job lubrication is required by the owner, use the following procedure: With the motor at a stand-still, remove the vent and grease plugs. Install grease fitting and add grease sparingly. Remove the old grease from the vent relief chamber. Operate the motor a few minutes before reinstalling the vent plug to allow excess grease to escape. If there is evidence of grease working out around the motor shaft, less grease should be added and the greasing periods lengthened. If grease continues to appear, take the motor to the motor manufacturer's authorized service station for repair.

NOTICE: Consult local motor manufacturer's service facility for information on type of grease and oil to be used.

NOTICE: The heater system should be checked once a year by a qualified technician. All maintenance/ service information should be recorded accordingly on the inspection sheet provided in this manual.

Should maintenance be required, perform the following inspection and service routine:

CLEANING THE UNIT

The unit casing, fan, diffuser and coil should be cleaned thoroughly once a year. Coil heat transfer efficiency depends on cleanliness. The following recommended procedures may be performed when lubricating the motor and cleaning the coil.

1. Wipe all excess lubricant from the motor, fan and casing. Clean the motor thoroughly. A dirty motor will run hot and eventually cause internal damage.
2. Clean the coil:
   a) Loosen the dirt with a brush on the fan side of the coil. Operate the motor allowing the fan to blow the loosened dirt through the unit.
   b) Use high pressure air or steam on the side of the coil away from the fan.

NOTICE: A piece of cheesecloth or a burlap bag may be used to collect the large particles during the cleaning process.

3. Clean the casing, fan blades, fan guard and diffuser using a damp cloth. Any rust spots on the casing should be cleaned and repainted.
4. Tighten the fan guard, motor frame and fan bolts. Check the fan for clearance in the panel orifice and free rotation.

REPLACEMENT PARTS

When ordering replacement parts
Model, Model Type (IE: Standard or Exp. Proof), Size & Item Numbers must be specified
Consult factory for price and availability

Figure 25
Horizontal Steam
Unit Heaters

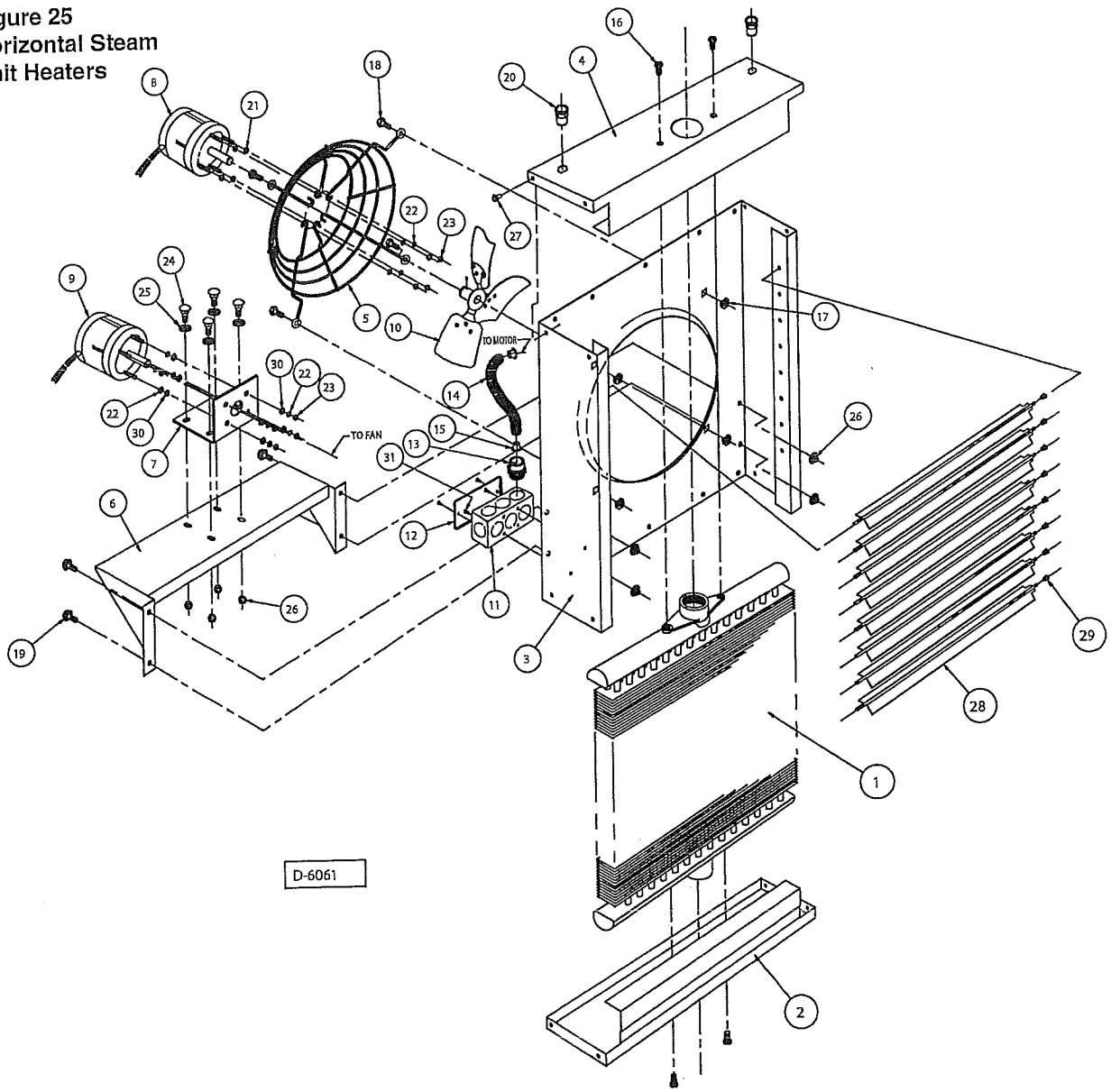

HORIZONTAL STEAM UNIT HEATER PARTS

1 - Element (1)
2 - Bottom Jacket Panel (1)
3 - Venturi Jacket Panel (1)
4 - Top Jacket Panel (1)
5 - Motor Mount & Fan Guard*
[Std. Unit Shown]
6 - Motor Mounting Bracket
[3 Phase and/or Explosion Proof]*
7 - Motor Mounting Angle
[3 Phase and/or Explosion Proof]* (1)
8 - Motor [Std. Units]*
9 - Motor [3 Phase and/or Explosion Proof]*
10 - Fan (1)
11 - Junction Box (1)
12 - Junction Box Cover (1)
13 - Connector (1)
14 - Conduit, Flex (1)
15 - Anti-Short (2)
16 - Screw (4)
17 - Nut Retainer (4)
18 - Bolt (3) Models 24 & 36,
(4) Models 48/204
19 - Flange Screw
20 - Threaded Inserts
21 - Grommet (4)
22 - Washer, Flat (4)
23 - Nut (4)
24 - Bolt (4)
25 - Washer, Spring Lock (8)
26 - Nut (8)
27 - Screw (2)
28 - Louvers (Horiz)
29 - Cone Spring
30 - Grommet, Stem (4)
31 - Screw (18)

( ) = Qty Req'd per unit **Select One*

Table 14 - Troubleshooting Guide

SYMPTOMS	POSSIBLE CAUSE(S)	CORRECTIVE ACTION
A. Leaking coil.	1. Frozen coil. 2. Defective coil. 3. Corrosion. 4. Leak in joint.	1. Replace. 2. Replace. 3. Replace 4. Braze joint if joint is exposed where leak has occurred.
B. Poor output on steam.	1. Check for air in coil. 2. Lint on coil fins.	1. Repair or replace thermostatic air vent. 2. Clean coil and fins.
C. Poor output on steam or hot water.	1. No circulation of water through coil. 2. Short cycling of motor. 3. Backward rotating motor.	1. Check circulation pump. Check for blocked tubes. 2. Check voltage and correct. Check for linted coil and clean. Check for defective overload and repair or replace motor. 3. On single phase motor replace motor. On three phase motor, reverse two leads to change rotation.
D. Noisy or vibrating unit.	1. Damaged fan blade. 2. Dirty fan blade.	1. Change fan blade. 2. Clean fan blade.

HOW TO ORDER REPLACEMENT PARTS

Please send the following information to your local representative; If further assistance is needed, contact the manufacturer's customer service department.

- Model number
- Serial Number (if any)
- Part description and Number as shown in the Replacement Parts Catalog.

LIMITED WARRANTY

HORIZONTAL STEAM & HOT WATER UNIT HEATERS

The Manufacturer warrants to the original owner at the original installation site that the Horizontal Steam and Hot Water Unit Heaters (the "Product") will be free from defects in material and workmanship for a period not to exceed one (1) year from startup or eighteen (18) months from date of shipment from the factory, whichever occurs first. If upon examination by the Manufacturer the Product is shown to have a defect in material or workmanship during the warranty period, the Manufacturer will repair or replace, at its option, that part of the Product which is shown to be defective.

This limited warranty does not apply:

(a) if the Product has been subjected to misuse or neglect, has been accidentally or intentionally damaged, has not been installed, maintained or operated in accordance with the furnished written instructions, or has been altered or modified in any way.

(b) to any expenses, including labor or material, incurred during removal or reinstallation of the defective Product or parts thereof.

(c) to any workmanship of the installer of the Product.

This limited warranty is conditional upon:

(a) shipment, to the Manufacturer, of that part of the Product thought to be defective. Goods can only be returned with prior written approval from the Manufacturer. All returns must be freight prepaid.

(b) determination, in the reasonable opinion of the Manufacturer, that there exists a defect in material or workmanship.

Repair or replacement of any part under this Limited Warranty shall not extend the duration of the warranty with respect to such repaired or replaced part beyond the stated warranty period.

THIS LIMITED WARRANTY IS IN LIEU OF ALL OTHER WARRANTIES, EITHER EXPRESS OR IMPLIED, AND ALL SUCH OTHER WARRANTIES, INCLUDING WITHOUT LIMITATION IMPLIED WARRANTIES OF MERCHANTABILITY OR FITNESS FOR A PARTICULAR PURPOSE, ARE HEREBY DISCLAIMED AND EXCLUDED FROM THIS LIMITED WARRANTY. IN NO EVENT SHALL THE MANUFACTURER BE LIABLE IN ANY WAY FOR ANY CONSEQUENTIAL, SPECIAL, OR INCIDENTAL DAMAGES OF ANY NATURE WHATSOEVER, OR FOR ANY AMOUNTS IN EXCESS OF THE SELLING PRICE OF THE PRODUCT OR ANY PARTS THEREOF FOUND TO BE DEFECTIVE. THIS LIMITED WARRANTY GIVES THE ORIGINAL OWNER OF THE PRODUCT SPECIFIC LEGAL RIGHTS. YOU MAY ALSO HAVE OTHER RIGHTS WHICH MAY VARY BY EACH JURISDICTION.

EQUIPMENT START-UP

Customer _____ **Job Name & Number** _____

PRE-INSPECTION INFORMATION
With power and water/steam off.

Type of Equipment: Unit Heater

Serial Number _____ Model Number _____

Name Plate Voltage: _____ Name Plate Amperage: _____

Steam Hot Water Rating: _____ BTU @ ____ °F
_____ kw @ ____ °C

- ☐ Are all panels in place?
- ☐ Has the unit suffered any external damage? Damage _____
- ☐ Does the piping and electric wiring appear to be installed in a professional manner?
- ☐ Has the piping and electric been inspected by the local authority having jurisdiction?
- ☐ Is the supply properly sized for the equipment?
- ☐ Were the installation instructions followed when the equipment was installed?
- ☐ Have all field installed controls been installed?
- ☐ Do you understand all the controls on this equipment? **If not, contact your wholesaler or rep. (DO NOT START this equipment unless you fully understand the controls.)**

ITB
NTERNATIONAL TESTING & BALANCING LTD 1974 3941 MERRICK ROAD SEAFORD NY 11783
516-781-8400 FAX 516-781-8744
ltbestimating@optonline .net

PROPOSAL

	PROJECT: GOLDEN CRUST JAMAICAN BAKERY								ESTIMATE#	
	ADDRESS: NEWARK AIRPORT								37528	
	FLOOR:							DATE	6/14/2011	
)WGS	M102									
)ATE	01/00/00									

WE ARE PLEASE TO SUBMIT OUR PROPOSAL FOR THE TESTING AND BALANCING AT THE ABOVE PROJECT IN ACCORDANCE WITH THE PRICES BELOW

AIR BALANCING $950.00

WATER BALANCING

THE FOLLOWING ARE QUOTED SEPARATELY FROM THE ABOVE PRICES

FURNISH & INSTALL BELTS, DRIVES AND MOTORS

LEAK TESTING

PRECONSTRUCTION TEST & REVIEW

PREMIUM PORTION OF OVERTIME WORK

SOUND & VIBRATION TESTING

CONTROLLED INSPECTION

ALTERNATES

ADDITIONAL COMMENTS:

EXCLUSIONS: SCAFFOLDING, CUTTING & PATCHING, REPLACEMENT OF CONCEALED SPLINE CEILING. OPENING LIGHT FIXTURES USED AS RETURN AIR TRANSFER

Tag: Diffusers, grills and registers

Specification: 15931

Manufacture: Carnes

Drawing reference:

Location: B2 Ramp Level & Passenger level

CARNES®

Imperial [IP] Dimensions
Metric (SI) in Parentheses

A- 8"·10"·14"·16"

SPECIFICATION SHEET

Models SFTB and SFAB Round Neck Stamped Louvered Diffuser 24" x 24" T-Bar Lay In

CARNES COMPANY, 448 S. Main St., P. O. Box 930040, Verona, WI 53593-0040 Phone (608) 845.6411 Fax: (608) 845.6470 carnes@carnes.com

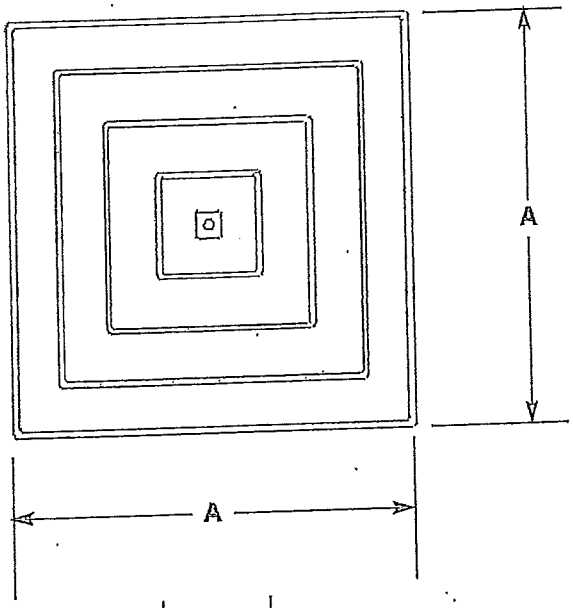

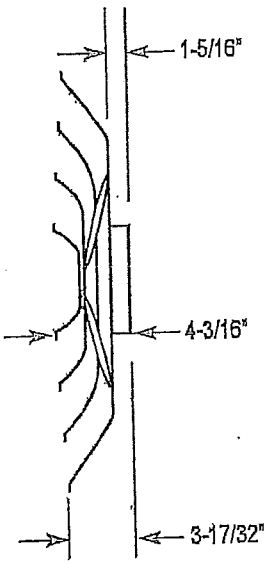

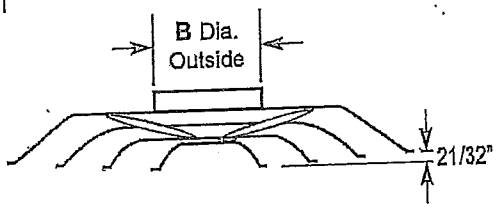

Model Number	Nominal Duct Size (Dia. In.)	A	B
SFAB/SFTB 2406	6 (152)	23-3/4 (603)	5-7/8 (149)
SFAB/SFTB 2407	7 (178)	23-3/4 (603)	6-7/8 (175)
✓ SFAB/SFTB 2408	8 (203)	23-3/4 (603)	7-7/8 (200)
✓ SFAB/SFTB 2410	10 (254)	23-3/4 (603)	9-7/8 (251)
SFAB/SFTB 2412	12 (305)	23-3/4 (603)	11-7/8 (302)
✓ SFAB/SFTB 2414	14 (356)	23-3/4 (603)	13-7/8 (352)
✓ SFAB/SFTB 2416	16 (406)	23-3/4 (603)	15-7/8 (403)

NOTES:

1. The inner assembly is easily removable by disengaging the spring lock and rotating counter clockwise.
2. To gain access for damper adjustment, remove the plug button on the center cone.
3. To surface mount this diffuser, use Carnes Model KXFA Auxiliary Frame.
4. Standard finish is #11 Bright White Electrocoat Enamel. Other finishes available upon request.
5. Metric (SI) dimensions are given in millimeters.
6. Construction of model SFTB is steel.
7. Construction of model SFAB is aluminum.

CARNES COMPANY © 2006 COPYRIGHT
ALL RIGHTS RESERVED

SUPERSEDES 12001-C

12001-D

Combination Dimensions
IP and (SI - Metric)

B

CARNES®
SPECIFICATION SHEET
STAMPED PERFORATED DIFFUSERS
T-BAR LAY IN

CARNES COMPANY, 448 S. Main St., P.O. Box 930040, Verona, WI. 53593-0040 Phone: 608/845-6411 Fax: 608/845-6470 carnes@carnes.com

MODEL SPHB - Steel Construction

(INSULATED BOOT BY S/M)

RETURN — NON-DUCTED

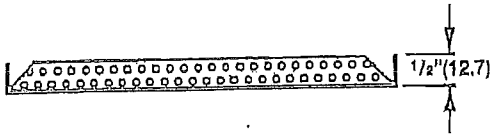

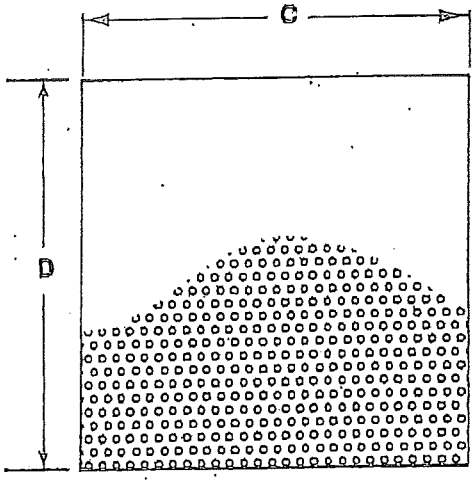

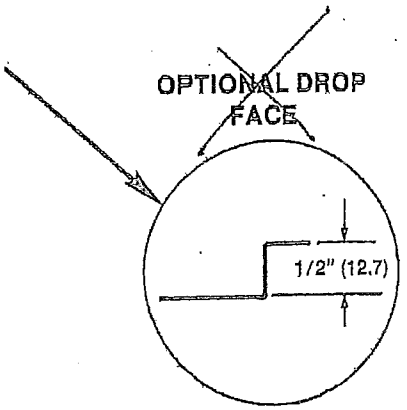

DIMENSIONS LISTED IN INCHES (In Millimeters)

MODEL NUMBER	C	D
11 4	11 3/4 (298.5)	11 3/4 (298.5)
12 4	11 3/4 (298.5)	23 3/4 (603.3)
'SPHB 14 4	11 3/4 (298.5)	47 3/4 (1212.9)
→ 22 4	23 3/4 (603.3)	23 3/4 (603.3)
24 4	23 3/4 (603.3)	47 3/4 (1212.9)

NOTE: *Standard Finish ... White Electrocoat*

COPYRIGHT CARNES CO. © 2006
ALL RIGHTS RESERVED

SUPERSEDES 12648-B

12648-C

CARNES®

IP [English] Units
SI (Metric) In Parenthesis

C
24WX36H

SPECIFICATION SHEET
MODELS RTRB, RTAB, RSRB and RSAB
STEEL REGISTERS & GRILLES — RETURN
SINGLE DEFLECTION — FIXED BLADE

CARNES COMPANY, 448 S. Main St., P. O. Box 930040, Verona, WI. 53593-0040 Phone: 608/845-6411 Fax: 608/845-6470 carnes@carnes.com http://www.carnes.com

RETURN GRILLE
MODELS RSRB or
RSAB

RETURN REGISTER
MODELS RTRB or
RTAB

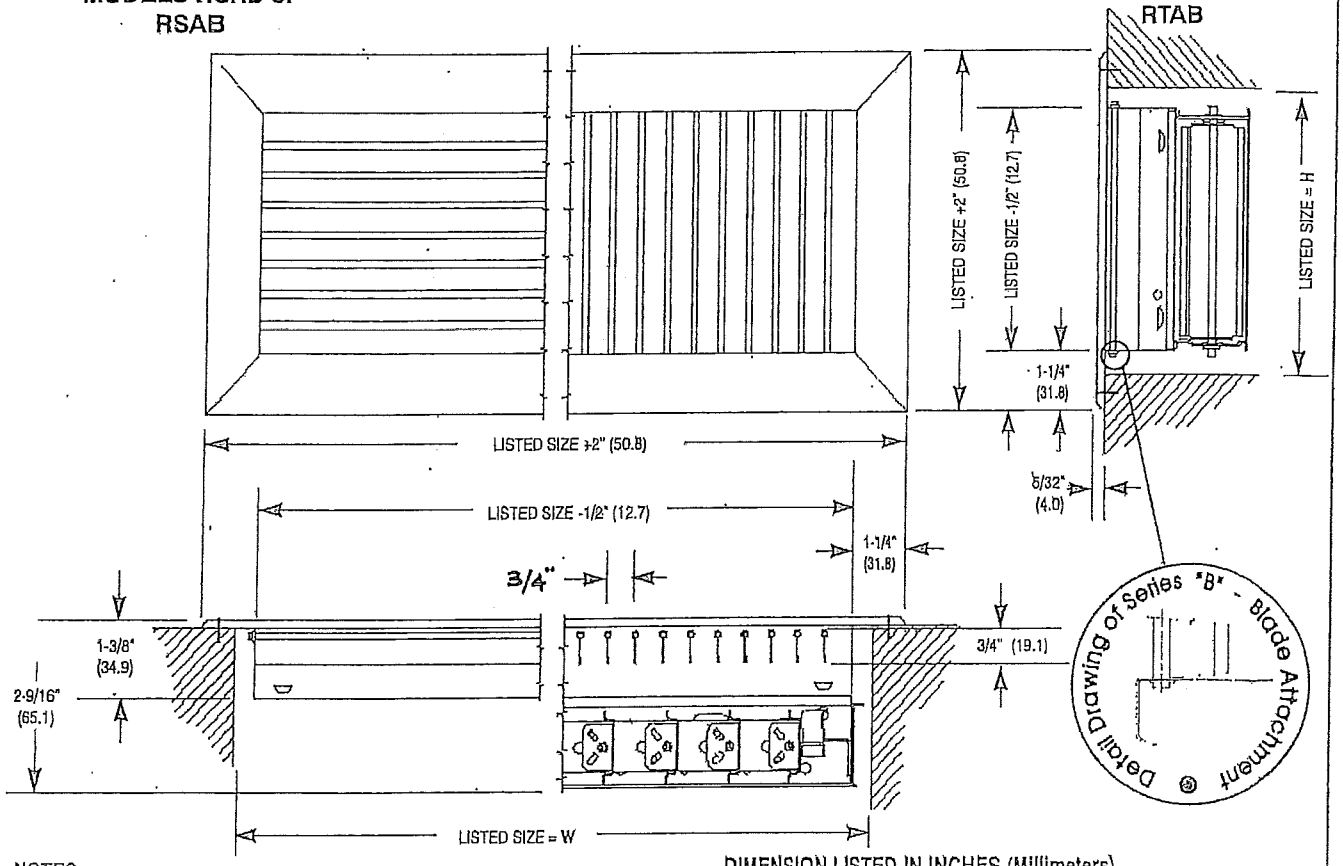

NOTES:

1. SCREWS: No. 6 x 1-1/4" (31.8mm) long.
2. GASKET: Polyurethane.
3. STANDARD FINISH: White.
4. BLADES INDIVIDUALLY ADJUSTABLE.
5. REMOVABLE KEY OPERATOR ON DAMPER.
6. CENTER MULLION IS USED FOR BLADE LENGTH EXCEEDING 24" (609.6mm) (Listed Size).
7. STANDARD SIZES ARE IN FULL INCH INCREMENTS IN EITHER DIRECTION. ALSO AVAILABLE, AS STANDARD, IN SIZES TO FIT NOMINAL 12" (304.8mm) and 24" (609.6mm) "LAY-IN T-BAR" APPLICATION.
8. FRACTIONAL SIZES IN 1/8" (3.2mm) INCREMENTS ARE AVAILABLE ON SPECIAL ORDER.
9. U. S. PATENT 5,771,647.

DIMENSION LISTED IN INCHES (Millimeters)

MODEL	BLADE SETTING	BLADE DIRECTION	DAMPER	AVAILABLE SIZES* MINIMUM W x H	AVAILABLE SIZES* MAXIMUM W x H
RSABV	45°	Vertical	No	4" x 4" (102 x 102)	36" x 36" (914 x 914)
RSABH	45°	Horizontal	No	4" x 4" (102 x 102)	36" x 36" (914 x 914)
RSRBV	0°	Vertical	No	4" x 4" (102 x 102)	36" x 36" (914 x 914)
RSRBH	0°	Horizontal	No	4" x 4" (102 x 102)	36" x 36" (914 x 914)
RTABV	45°	Vertical	Yes	4" x 4" (102 x 102)	36" x 36" (914 x 914)
RTABH	45°	Horizontal	Yes	4" x 4" (102 x 102)	36" x 36" (914 x 914)
RTRBV	0°	Vertical	Yes	4" x 4" (102 x 102)	36" x 36" (914 x 914)
RTRBH	0°	Horizontal	Yes	4" x 4" (102 x 102)	36" x 36" (914 x 914)

**Minimum and maximum single unit sizes.*

Larger sizes are furnished by butting single units together. All butted units will be constructed of even inch sized panels unless otherwise specified.

COPYRIGHT CARNES CO. © 1997
ALL RIGHTS RESERVED [S1]

SUPERSEDES 14095-F

14095-G • 3/4"

Tag: VFD-SF-11.1,11.2 & 11.3 / VFD-RF-1.1,1.2,1.3 &1.4 / VFD-P-501 & 5.02

Specification: 15971

Manufacture: ABB

Drawing reference:

Location: B2 Ramp Level Crawl Space, B2 Ramp Level MER, B2 Passenger Lever

ABB DRIVES

REP: MECHANICAL TECH

PHONE: 973-616-3800

ACH550

Installation, Operation and Maintenance Manual (I, O & M)
ACH550-UH HVAC Drives (1...550 HP)
ACH550-BCR/BDR/VCR/VDR E-Clipse Bypass Drives (1...400 HP)
ACH550-PCR/PDR Packaged Drives with Disconnect (1...550 HP)

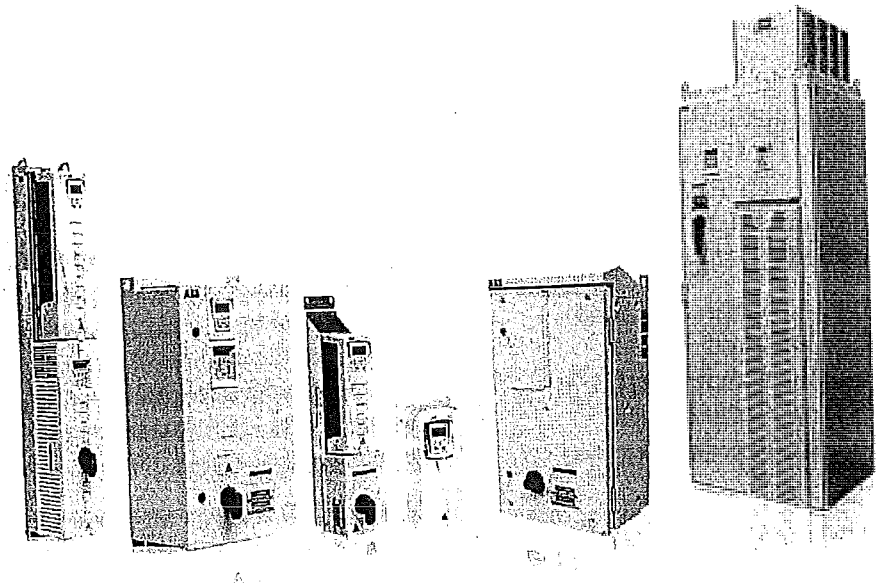

ABB

Safety

Use of warnings and notes

There are two types of safety instructions throughout this manual:

- Notes draw attention to a particular condition or fact, or give information on a subject.
- Warnings caution you about conditions which can result in serious injury or death and/or damage to the equipment. They also tell you how to avoid the danger. The warning symbols are used as follows:

Electricity warning warns of hazards from electricity which can cause physical injury and/or damage to the equipment.

- **WARNING!** The ACH550 adjustable speed AC drive should ONLY be installed by a qualified electrician.
- **WARNING!** Even when the motor is stopped, dangerous voltage is present at the power circuit terminals U1, V1, W1 (L1, L2, L3) and U2, V2, W2 (T1, T2 T3) and, depending on the frame size, UDC+ and UDC-, or BRK+ and BRK-.
- **WARNING!** Dangerous voltage is present when input power is connected. After disconnecting the supply, wait at least 5 minutes (to let the intermediate circuit capacitors discharge) before removing the cover.
- **WARNING!** Even when power is switched off from the input terminals of the ACH550, there may be dangerous voltage (from external sources) on the terminals of the relay outputs.
- **WARNING!** When the control terminals of two or more drives are connected in parallel, the auxiliary voltage for these control connections must be taken from a single source which can either be one of the drives or an external supply.
- **WARNING!** Disconnect the internal EMC filter when installing the drive on an IT system (an ungrounded power system or a high-resistance-grounded [over 30 ohm] power system).
- **WARNING!** Do not attempt to install or remove EM1, EM3, F1 or F2 screws while power is applied to the drive's input terminals.

General warning warns about conditions, other than those caused by electricity, which can result in physical injury and/or damage to the equipment.

- **WARNING!** Do not control the motor with the disconnecting device (disconnecting means); instead, use the control panel keys or commands via the I/O board of the drive. The maximum allowed number of charging cycles of the DC capacitors (i.e. power-ups by applying power) is five in ten minutes.
- **WARNING!** Never attempt to repair a malfunctioning ACH550; contact the factory or your local Authorized Service Center for repair or replacement.
- **WARNING!** The ACH550 will start up automatically after an input voltage interruption if the external run command is on.
- **WARNING!** The heat sink may reach a high temperature.

Note: For more technical information, contact the factory or your local ABB representative.

Contents

This manual is the Operation and Maintenance Manual for the ACH550 Drives. Complete technical details and programming information are available in the *ACH550 User's Manual*, publication number 3AUA0000081823.

1. To determine the type of your drive, refer to its construction code on either:
   - Serial number label attached on upper part of the chokeplate between the mounting holes.
   - Type code label attached on the heat sink – on the side of the enclosure.

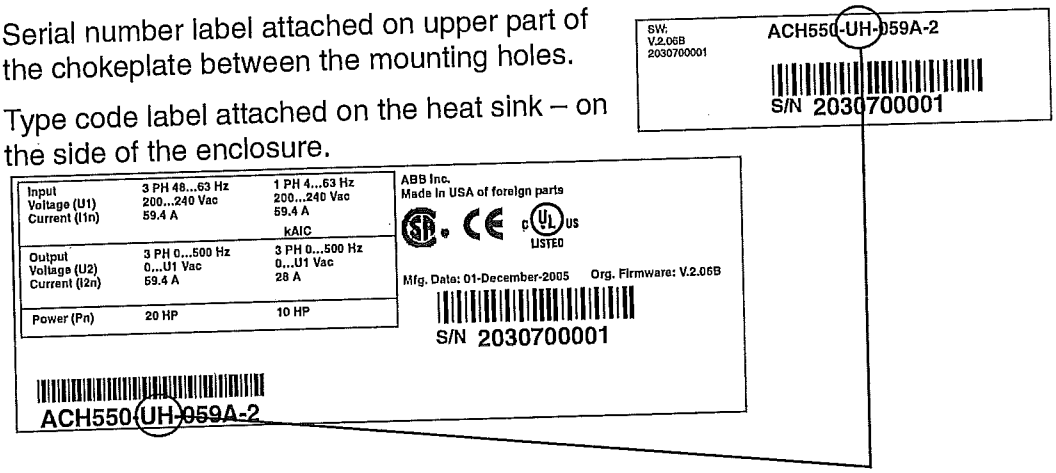

2. According to the construction code, proceed to your drive's installation, operation, diagnostics and maintenance information:
   - UH – Below.
   - VCR, VDR, BCR, BDR (E-Clipse Bypass) – page *39*.
   - PCR, PDR (Packaged Drives with Disconnect) – page *77*.

ACH550-UH

Installation

Study these installation instructions carefully before proceeding. **Failure to observe the warnings and instructions may cause a malfunction or personal hazard.**

WARNING! Before you begin read *Safety* on page *2*.

1. Prepare for installation

Lifting R1...R6

Lift the drive only by the metal chassis.

Lifting R7...R8

WARNING! Handle and ship floor mounted enclosures only in the upright position. These units are not designed to be laid on their backs.

1. Use a pallet truck to move the transport package/enclosure to the installation site.
2. Remove the cabinet side panels for access to the cabinet/pallet mounting bolts. (6 torx screws hold each cabinet side panel in place. Leave the side panels off until later.)
3. Remove the 4 bolts that secure the cabinet to the shipping pallet.

WARNING! Use the lifting lugs/bars at the top of the unit to lift R7/R8 drives.

4. Use a hoist to lift the drive. (Do not place drive in final position until mounting site is prepared.)

Unpack the drive

1. Unpack the drive.
2. Check for any damage and notify the shipper immediately if damaged components are found.
3. Check the contents against the order and the shipping label to verify that all parts have been received.

Tools required

To install the ACH550 you need the following:

- Screwdrivers (as appropriate for the mounting hardware used)
- Wire stripper
- Tape measure
- Drill
- Frame sizes R5...R8 with UL type 12 enclosure: Punch for conduit mounting holes
- Frame sizes R7/R8: pallet truck and hoist
- For installations involving frame size R6...R8: The appropriate crimping tool for power cable lugs.

- Mounting hardware: screws or nuts and bolts, four each. The type of hardware depends on the mounting surface and the frame size:

Frame Size	Mounting Hardware		Note
R1...R4	M5	#10	
R5	M6	1/4 in	
R6	M8	5/16 in	
R7...R8	M10	7/16	Secures free standing cabinets if required.

- For installations involving frame size R7...R8: Hoist.

WARNING! Before installing the ACH550, ensure the input power supply to the drive is off.

WARNING! Metal shavings or debris in the enclosure can damage electrical equipment and create a hazardous condition. Where parts, such as conduit plates require cutting or drilling, first remove the part. If that is not practical, cover nearby electrical components to protect them from all shavings or debris.

Flange Mounting Instructions

Frame size	IP21 / UL type 1		IP54 / UL type 12	
	Kit	Code (English)	Kit	Code (English)
R1	FMK-A-R1	100000982	FMK-B-R1	100000990
R2	FMK-A-R2	100000984	FMK-B-R2	100000992
R3	FMK-A-R3	100000986	FMK-B-R3	100000994
R4	FMK-A-R4	100000988	FMK-B-R4	100000996
R5	AC8-FLNGMT-R5	ACS800-PNTG01U-EN	-	-
R6	AC8-FLNGMT-R6		-	-

2. Prepare the mounting location

1. Mark the position of the mounting holes.

Note: Frame sizes R3 and R4 have four holes along the top. Use only two. If possible, use the two outside holes (to allow room to remove the fan for maintenance).

Note: ACH400 drives can be replaced using the original mounting holes. For R1 and R2 frame sizes, the mounting holes are identical. For R3 and R4 frame sizes, the inside mounting holes on the top of ACH550 drives match ACH400 mounts.

Note: Frame sizes R7 and R8 have mounting holes inside the enclosure base.

Where it is not possible to use either mounting hole at the back of the base, use an L-bracket at the top of the enclosure to secure the cabinet to a wall or to the back of another enclosure. Bolt the L-bracket to the enclosure using the lifting lug bolt hole on the top of the enclosure.

2. Drill holes of appropriate size in the mounting location.

3. Remove front cover

R1...R6, *UL type 1*

1. Remove the control panel, if attached.
2. Loosen the captive screw at the top.
3. Pull near the top to remove the cover.

R1...R6, *UL type 12*

1. If hood is present: Remove screws (2) holding the hood in place.
2. If hood is present: Slide hood up and off of the cover.
3. Loosen the captive screws around the edge of the cover.
4. Remove the cover.

R7...R8, *Cabinet Door*

1. To open the cabinet door, loosen the quarter-turn screws that hold the cabinet door closed.

R7...R8, *Side Panels*

The side panels were removed to take the cabinet off the pallet. Installation access is easier if these panels are kept off throughout the installation.

4. Mount the drive

R1...R6, *UL type 1*

1. Position the ACH550 onto the mounting screws or bolts and securely tighten in all four corners.

Note: Use mounting hardware that permits fan replacement without removal.

Note: Lift the ACH550 by its metal chassis.

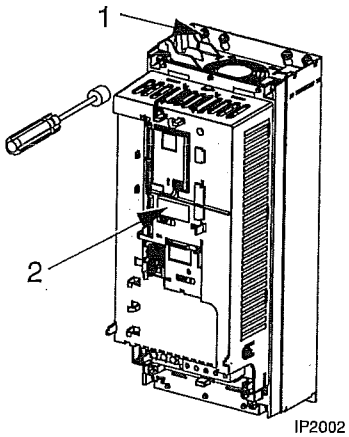

2. Non-English speaking locations: Add a warning sticker in the appropriate language over the existing warning on the top of the module.

***R1...R6,** UL type 12*

For the UL type 12 enclosures, rubber plugs are required in the holes provided for access to the drive mounting slots.

1. As required for access, remove the rubber plugs. Push plugs out from the back of the drive.
2. R5 & R6: Align the sheet metal hood (not shown) in front of the drive's top mounting holes. (Attach as part of next step.)
3. Position the ACH550 onto the mounting screws or bolts and securely tighten in all four corners.

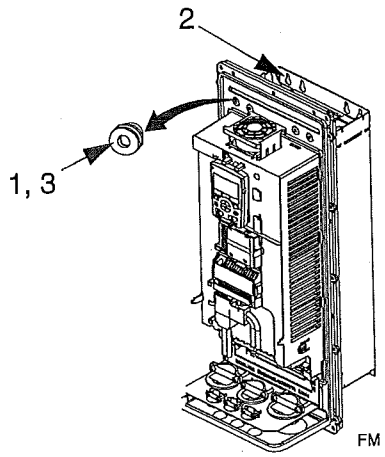

Note: Lift the ACH550 by its metal chassis (frame size R6 by the lifting holes on both sides at the top).

4. Re-install the rubber plugs.
5. Non-English speaking locations: Add a warning sticker in the appropriate language over the existing warning on the top of the module.

R7...R8

1. Use a hoist to move the cabinet into position.

Note: If the cabinet location does not provide access to the cabinet sides, be sure to re-mount side panels before positioning cabinet.

2. Install and tighten mounting bolts.

5. Install wiring

WARNING! Ensure the motor is compatible for use with the ACH550. The ACH550 must be installed by a competent person. If in doubt, contact your local ABB sales or service office.

Conduit kit

Wiring R1...R6 drives with the UL type 1 Enclosure requires a conduit kit with the following items:

- conduit box
- screws
- cover

The kit is included with UL type 1 Enclosures.

Connection diagrams

The following diagrams show:

- The terminal layout for frame size R3, which, in general, applies to frame sizes R1...R6, except for the R5/R6 power and ground terminals.
- The R5/R6 power and ground terminals.
- The terminal layout for R7/R8.

R1...R4 (Diagram shows the R3 frame.)

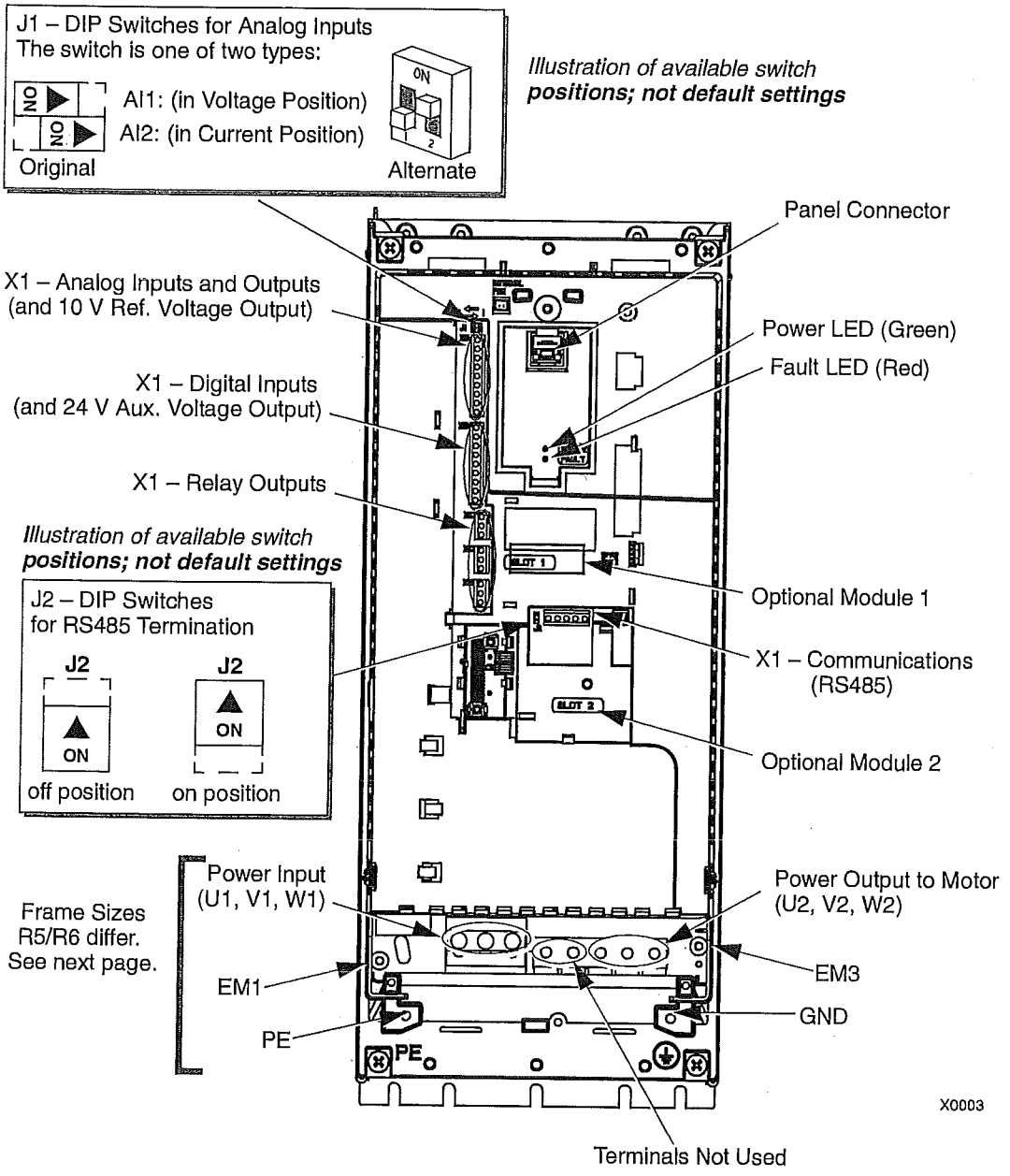

WARNING! To avoid danger, or damage to the drive, on IT systems and corner grounded TN systems, see section *Disconnecting the internal EMC filter* on page *10*.

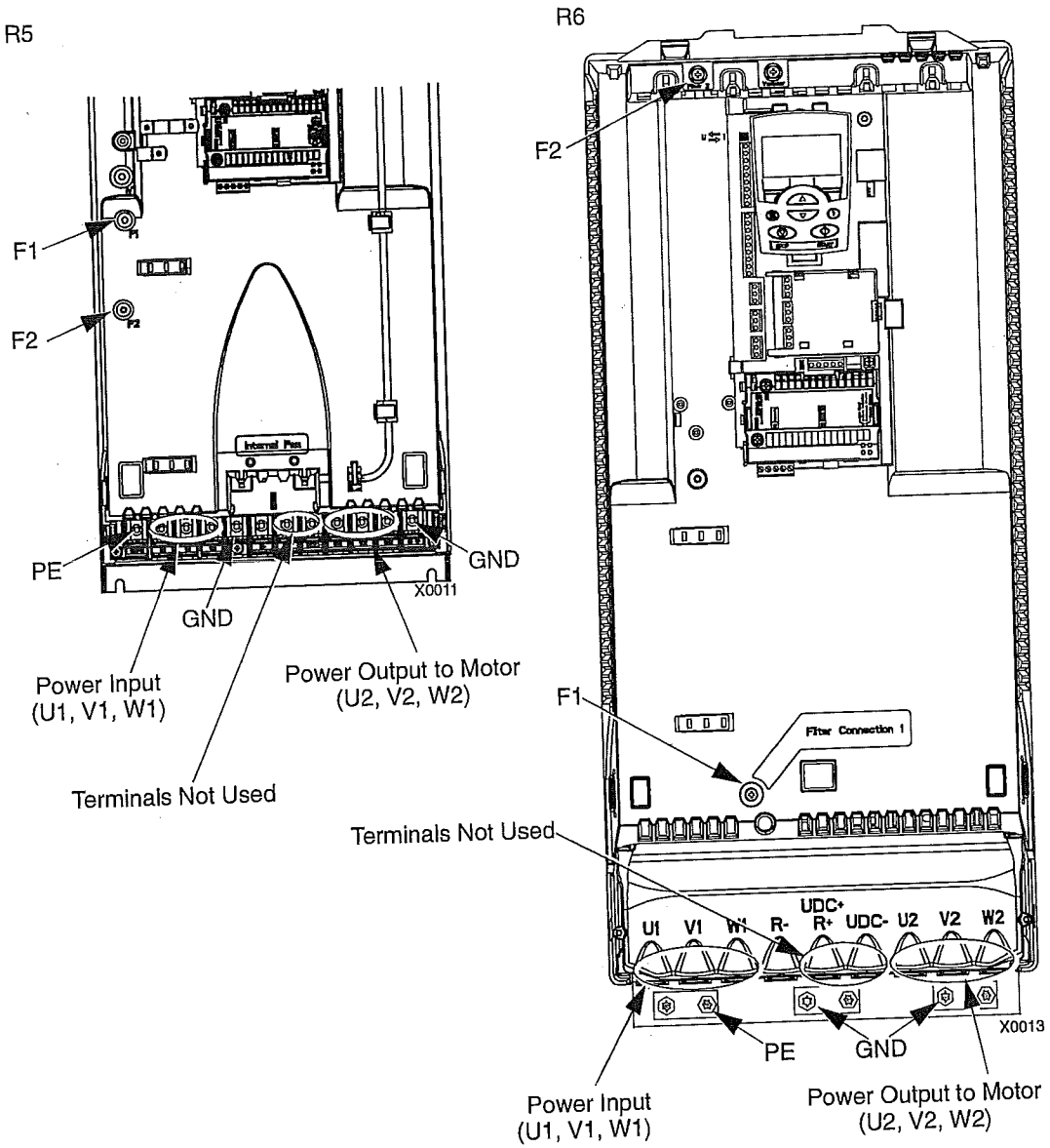

WARNING! To avoid danger, or damage to the drive, on IT systems and corner grounded TN systems, see section *Disconnecting the internal EMC filter* on page *10*.

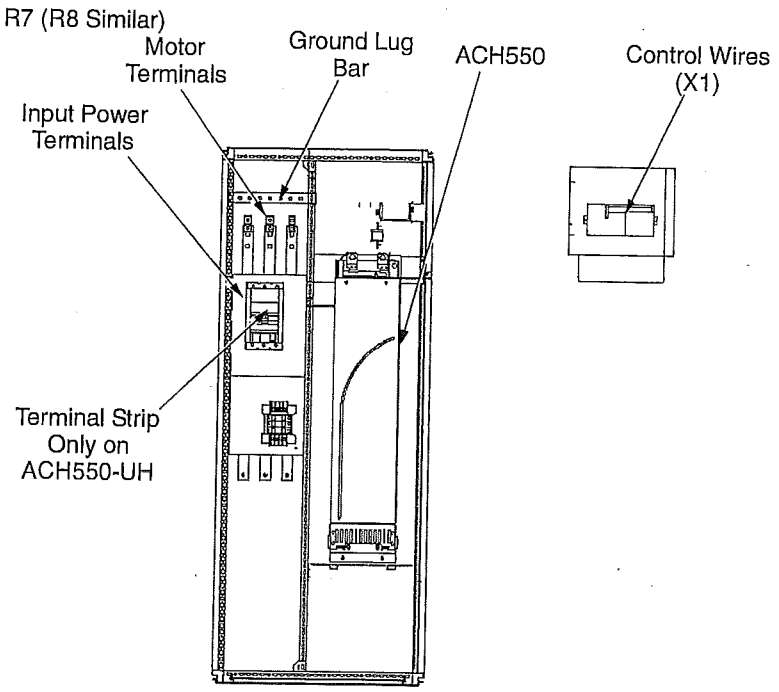

Disconnecting the internal EMC filter

On certain types of systems, you must disconnect the internal EMC filter, otherwise the system will be connected to ground potential through the EMC filter capacitors, which might cause danger, or damage the drive.

Note: When the internal EMC filter is disconnected, the drive is not EMC compatible.

The following table shows the installation rules for the EMC filter screws in order to connect or disconnect the filter, depending on the system type and the frame size. For more information on the different system types, see *Floating networks* on page *12* and *Unsymmetrically grounded networks* on page *11*.

The locations of screws EM1 and EM3 are shown in the diagram on page *8*. The locations of screws F1 and F2 are shown in the diagram on page *9*.

Frame sizes	Screw	Symmetrically grounded TN systems (TN-S systems)	Corner grounded TN systems	IT systems (ungrounded or high-resistance-grounded [> 30 ohm])
R1...R3	EM1	x	x	•
	EM3	x	•	•
R4	EM1	x	x	–
	EM3	x	–	–
R5...R6	F1	x	x	–
	F2	x	x	–

x = Install the screw. (EMC filter will be connected.)
• = Replace the screw with the provided polyamide screw. (EMC filter will be disconnected.)
– = Remove the screw. (EMC filter will be disconnected.)
EM1 and EM3 screws are M4 x 12
F1 and F2 screws are M4 x 16

Ground connections

For personnel safety, proper operation and to reduce electromagnetic emission/pick-up, the drive and the motor must be grounded at the installation site.

- Conductors must be adequately sized as required by safety regulations.
- Power cable shields must be connected to the drive PE terminal in order to meet safety regulations.
- Power cable shields are suitable for use as equipment grounding conductors only when the shield conductors are adequately sized as required by safety regulations.
- In multiple drive installations, do not connect drive terminals in series.

Unsymmetrically grounded networks

WARNING! Do not attempt to install or remove EM1 or EM3 screws while power is applied to the drive's input terminals.

Unsymmetrically grounded networks are defined in the following table. In such networks, the internal connection provided by the EM3 screw (on frame sizes R1...R4 only) must be disconnected by removing EM3. If the grounding configuration of the network is unknown, remove EM3.

Note: ACH550-UH drives are shipped with the screw removed (but included in the conduit box).

Unsymmetrically Grounded Networks – EM3 Must Be Out			
Grounded at the corner of the delta	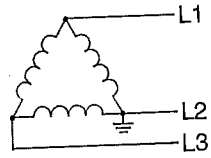	Grounded at the mid point of a delta leg	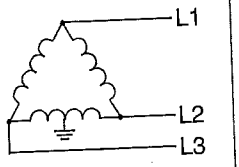
Single phase, grounded at an end point	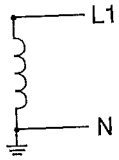	Three phase "Variac" without solidly grounded neutral	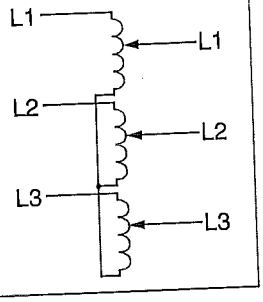

EM3 (an M4x16 screw) makes an internal ground connection that reduces electro-magnetic emission. Where EMC (electro-magnetic compatibility) is a concern, and the network is symmetrically grounded, EM3 may be installed. For reference, the diagram at right illustrates a symmetrically grounded network.

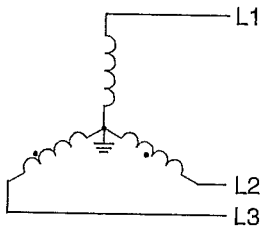

Floating networks

WARNING! Do not attempt to install or remove EM1, EM3, F1 or F2 screws while power is applied to the drive's input terminals.

For floating networks (also known as IT, ungrounded, or impedance/resistance grounded networks):

- Disconnect the ground connection to the internal RFI filters:
  - Frame sizes R1...R4: Remove the EM1 screw (unit is shipped with EM3 removed, see *Connection diagrams* on page *8*).
  - Frame sizes R5...R6: Remove both the F1 and F2 screws (see page *9*).
- Where EMC requirements exist, check for excessive emission propagated to neighboring low voltage networks. In some cases, the natural suppression in transformers and cables is sufficient. If in doubt, use a supply transformer with static screening between the primary and secondary windings.
- Do NOT install an external RFI/EMC filter. Using an RFI filter grounds the input power through the filter capacitors, which could be dangerous and could damage the unit.

Checking motor and motor cable insulation

WARNING! Check the motor and motor cable insulation before connecting the drive to input power. For this test, make sure that motor cables are NOT connected to the drive.

1. Complete motor cable connections to the motor, but NOT to the drive output terminals (U2, V2, W2).
2. At the drive end of the motor cable, measure the insulation resistance between each motor cable phase and Protective Earth (PE): Apply a voltage of 1 kV DC and verify that resistance is greater than 1 Mohm.

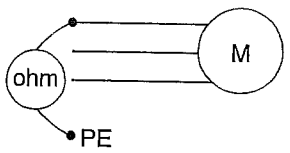

R1...R6, wiring UL type 1 enclosure

1. Open the appropriate knockouts in the conduit box. (See *Conduit kit* on page 7.)
2. Install thin-wall conduit clamps (not supplied).

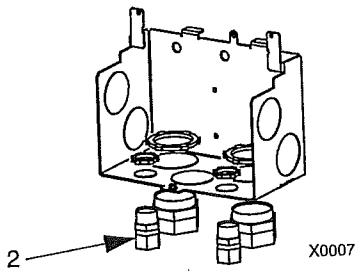

3. Install conduit box.
4. Connect conduit runs for input power, motor and control cables to the box.

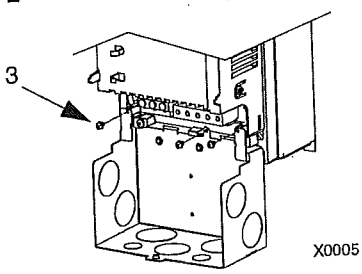

5. Route input power and motor wiring through separate conduits.
6. Strip wires.
7. Connect power, motor, and ground wires to the drive terminals.

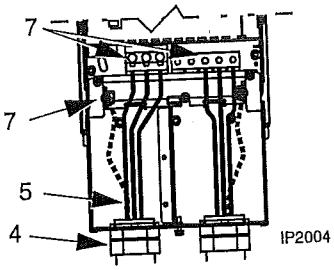

Note: For R5 frame size, the minimum power cable size is 25 mm^2 (4 AWG). For R6 frame size, refer to *Power terminal considerations – R6 Frame size* on page *16*.

8. Route the control cables through the conduit (not the same conduit as either input power or motor wiring).
9. Use available secure points and tie strap landings to permanently secure control wiring at a minimum distance of 6 mm (1/4") from power wiring.
10. Strip the control cable sheathing and twist the copper screen into a pig-tail.
11. Connect the ground screen pig-tail for digital and analog I/O cables at X1-1. (Ground only at drive end.)
12. Connect the ground screen pig-tail for RS485 cables at X1-28 or X1-32. (Ground only at drive end.)

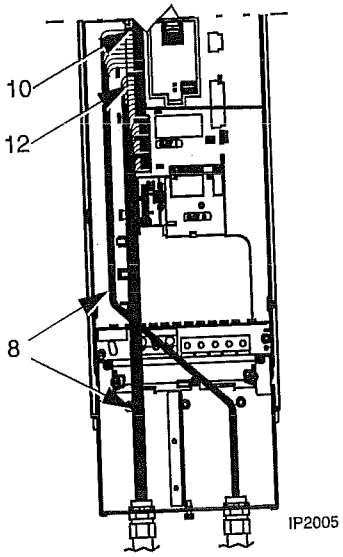

13. Strip and connect the individual control wires to the drive terminals.
14. Install the conduit box cover (1 screw).

R1...R6, wiring UL type 12 enclosure

1. Step depends on Frame Size:
   - Frame Sizes R1...R4: Remove and discard the cable seals where conduit will be installed. (The cable seals are cone-shaped, rubber seals on the bottom of the drive.)
   - Frame Sizes R4 and R5: Use punch to create holes for conduit connections as needed.

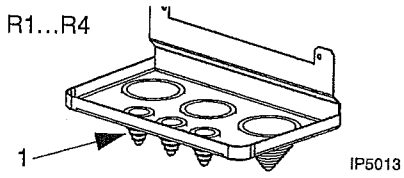

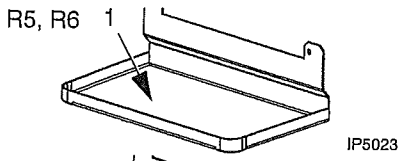

2. For each conduit run (input power, motor and control wiring must be separate), install water tight conduit connectors (not supplied).

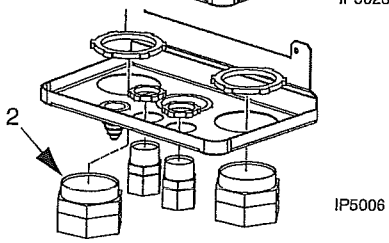

3. Route the power wiring through conduit.
4. Route the motor wiring through conduit (not the same conduit as input power wiring run).
5. Strip the wires.
6. Connect the power, motor, and ground wires to the drive terminals.

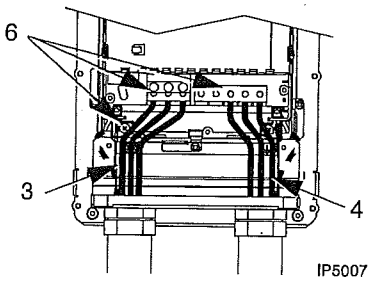

Note: For R5 frame size, the minimum power cable size is 25 mm^2 (4 AWG). For R6 frame size, refer to *Power terminal considerations – R6 Frame size* on page *16*.

---

7. Route the control cables through the conduit (not the same conduit as either input power or motor wiring runs).
8. Use available secure points and tie strap landings to permanently secure control wiring at a minimum distance of 6 mm (1/4") from power wiring.
9. Strip the control cable sheathing and twist the copper screen into a pig-tail.
10. Connect the ground screen pig-tail for digital and analog I/O cables at X1-1. (Ground only at drive end.)
11. Connect the ground screen pig-tail for RS485 cables at X1-28 or X1-32. (Ground only at drive end.)
12. Strip and connect the individual control wires to the drive terminals.
13. Install the conduit box cover (1 screw).

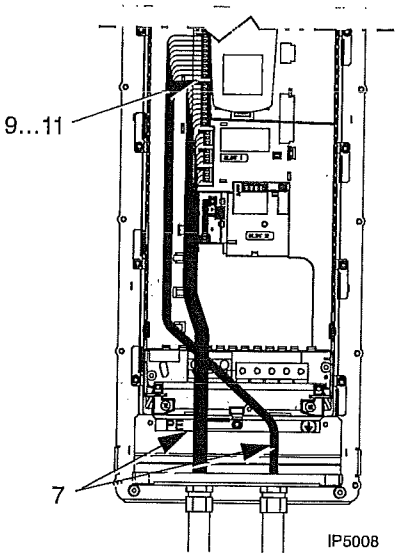

R7...R8, wiring (both enclosure types)

The figures show connections in the R7 cabinet, the R8 cabinet is similar.

1. Remove the conduit connection plate from the top of the left bay.
2. Route the input power, motor and control cables to the top of the cabinet. Each cable type (input power, motor, and control) must be in separate conduit.
3. Use punch to create holes for conduit connections as needed.
4. UL type 12 Enclosure: For each conduit run (input power, motor and control wiring must be separate), install water tight conduit connectors (not supplied).
5. Connect input power and motor cables to the bus terminals.
6. Connect grounds to ground bar.
7. Use available secure points and tie strap landings to permanently secure control wiring at a minimum distance of 6 mm (1/4") from power wiring.
8. Strip the control cable sheathing and twist the copper screen into a pig-tail.
9. Connect the ground screen pig-tail for digital and analog I/O cables at X1-1. (Ground only at drive end.)
10. Connect the ground screen pig-tail for RS485 cables at X1-28 or X1-32. (Ground only at drive end.)
11. Strip and connect the individual control wires to the drive terminals.

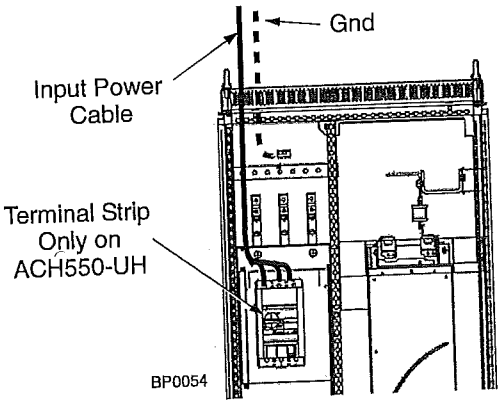

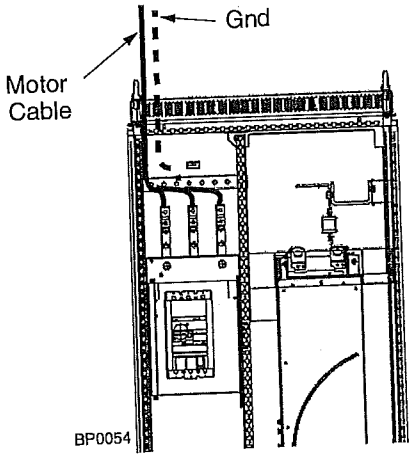

Drive's power connection terminals

The following table provides specifications for the drive's power connection terminals.

Frame Size	U1, V1, W1 U2, V2, W2 BRK±, UDC± Terminals						Earthing PE Terminal			
	Min. Wire Size		Max. Wire Size		Torque		Max. Wire Size		Torque	
	mm^2	AWG	mm^2	AWG	Nm	lb-ft	mm^2	AWG	Nm	lb-ft
R1[Note 1]	0.75	18	16	6	1.3	1	16	6	1.3	1
R2[Note 1]	0.75	18	16	6	1.3	1	16	6	1.3	1
R3[Note 1]	2.5	14	25	3	2.7	2	25	3	2.7	2
R4[Note 1]	10	8	50	1/0	5.6	4	50	1/0	5.6	4
R5	16	6	70	2/0	15	11	70	2/0	15	11
R6	95[Note 2]	3/0	185	350 MCM	40	30	185	350 MCM	40	30
R7	16	6	185	350 MCM	40	30	Attach appropriate ring lugs to ground wires and mount with, up to five 13/32 bolts.			
R8	16	6	2x240	2x500 MCM	57	42				

1. Do not use aluminum cable with frame sizes R1...R4.
2. See the following section for smaller wire sizes on frame size R6.

Power terminal considerations – R6 Frame size

WARNING! For R6 power terminals, if compression lugs are supplied, they can only be used for wire sizes that are 95 mm^2 (3/0 AWG) or larger. Smaller wires will loosen and may damage the drive, and require ring lugs as described below.

On the R6 frame size, if the cable size used is less than 95 mm^2 (3/0 AWG) or if no compression lugs are supplied, use ring lugs.

Drive's control connection terminals

The following table provides specifications for the drive's control terminals

Frame Size	Control			
	Maximum Wire Size		Torque	
	mm^2	AWG	Nm	lb-ft
All	1.5	16	0.4	0.3

Control terminal descriptions

The following full-page diagram provides a general description of the control terminals on the drive.

Note: Terminals 3, 6, and 9 are at the same potential.

Note: For safety reasons the fault relay signals a "fault" when the ACH550 is powered down.

	X1		Drive Control Terminal Description
Analog I/O	1	SCR	Terminal for signal cable screen. (Connected internally to chassis ground.)
	2	AI1	Analog input channel 1, programmable. Default[2] = external reference. Resolution 0.1%, accuracy ±1%.
			J1:AI1 OFF: 0(2)...10 V (R_i = 312 kΩ) or, for OFF for ON
			J1:AI1 ON: 0(4)...20 mA (R_i = 100 Ω)
	3	AGND	Analog input circuit common (connected internally to chassis gnd. through 1 MΩ).
	4	+10 V	Potentiometer reference source: 10 V ±2%, max. 10 mA (1kΩ ≤ R ≤ 10kΩ).
	5	AI2	Analog input channel 2, programmable. Default[2] = PID feedback. Resolution 0.1%, accuracy ±1%.
			J1:AI2 OFF: 0(2)...10 V (R_i = 312 kΩ) or, for OFF for ON
			J1:AI2 ON: 0(4)...20 mA (R_i = 100 Ω)
	6	AGND	Analog input circuit common (connected internally to chassis gnd. through 1 MΩ).
	7	AO1	Analog output, programmable. Default[2] = frequency. 0...20 mA (load < 500 Ω).
	8	AO2	Analog output, programmable. Default[2] = current. 0...20 mA (load < 500 Ω).
	9	AGND	Analog output circuit common (connected internally to chassis gnd. through 1 MΩ).
Digital Inputs[1]	10	+24V	Auxiliary voltage output 24 VDC / 250 mA (reference to GND), short circuit protected.
	11	GND	Auxiliary voltage output common (connected internally as floating).
	12	DCOM	Digital input common. To activate a digital input, there must be ≥+10 V (or ≤-10 V) between that input and DCOM. The 24 V may be provided by the ACH550 (X1-10) or by an external 12...24 V source of either polarity.
	13	DI1	Digital input 1, programmable. Default[2] = start/stop.
	14	DI2	Digital input 2, programmable. Default[2] = not configured.
	15	DI3	Digital input 3, programmable. Default[2] = constant (preset) speed.
	16	DI4	Digital input 4, programmable. Default[2] = safety interlock.
	17	DI5	Digital input 5, programmable. Default[2] = not configured.
	18	DI6	Digital input 6, programmable. Default[2] = not configured.
Relay Outputs	19	RO1C	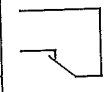 Relay output 1, programmable. Default[2] = Ready Maximum: 250 VAC / 30 VDC, 2 A Minimum: 500 mW (12 V, 10 mA)
	20	RO1A	
	21	RO1B	
	22	RO2C	Relay output 2, programmable. Default[2] = Running Maximum: 250 VAC / 30 VDC, 2 A Minimum: 500 mW (12 V, 10 mA)
	23	RO2A	
	24	RO2B	
	25	RO3C	Relay output 3, programmable. Default[2] = Fault (-1) Maximum: 250 VAC / 30 VDC, 2 A Minimum: 500 mW (12 V, 10 mA)
	26	RO3A	
	27	RO3B	

1 Digital input impedance 1.5 kΩ. Maximum voltage for digital inputs is 30 V.

2 Default values depend on the macro used. Values specified are for the HVAC default macro.

You can wire the digital input terminals in either a PNP or NPN configuration.

PNP connection (source)

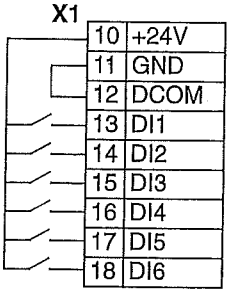

NPN connection (sink)

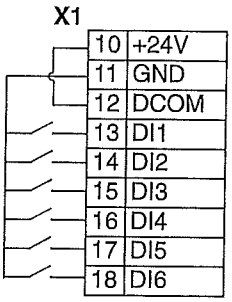

Serial communications

Terminals 28...32 provide RS485 serial communication connections used to control or monitor the drive from a fieldbus controller.

6. Check installation

Before applying power, perform the following checks.

✓	Check
	Installation environment conforms to the drive's specifications for ambient conditions.
	The drive is mounted securely.
	Space around the drive meets the drive's specifications for cooling.
	The motor and driven equipment are ready for start.
	For floating networks (R1...R6): The internal RFI filter is disconnected (screws EM1 & EM3 or F1 & F2).
	The drive is properly grounded.
	The input power voltage matches the drive nominal input voltage range.
	The input power connections at U1, V1, and W1 are connected and tightened as specified.
	The input power branch circuit protection is installed.
	The motor connections at U2, V2, and W2 are connected and tightened as specified.
	The input power, motor and control wiring are routed through separate conduit runs.
	NO power factor compensation capacitors are in the motor cable.
	The control connections are connected and tightened as specified.
	NO tools or foreign objects (such as drill shavings) are inside the drive.
	NO alternate power source for the motor (such as a bypass connection) is connected – no voltage is applied to the output of the drive.

7. Re-install cover

8. Apply power

Always re-install the covers before turning power on.

WARNING! The ACH550 will start up automatically at power up, if the external run command is on.

Apply input power. When power is applied to the ACH550, the green LED comes on.

Note: Before increasing motor speed, check that the motor is running in the desired direction. To change rotation direction, switch motor leads as shown below.

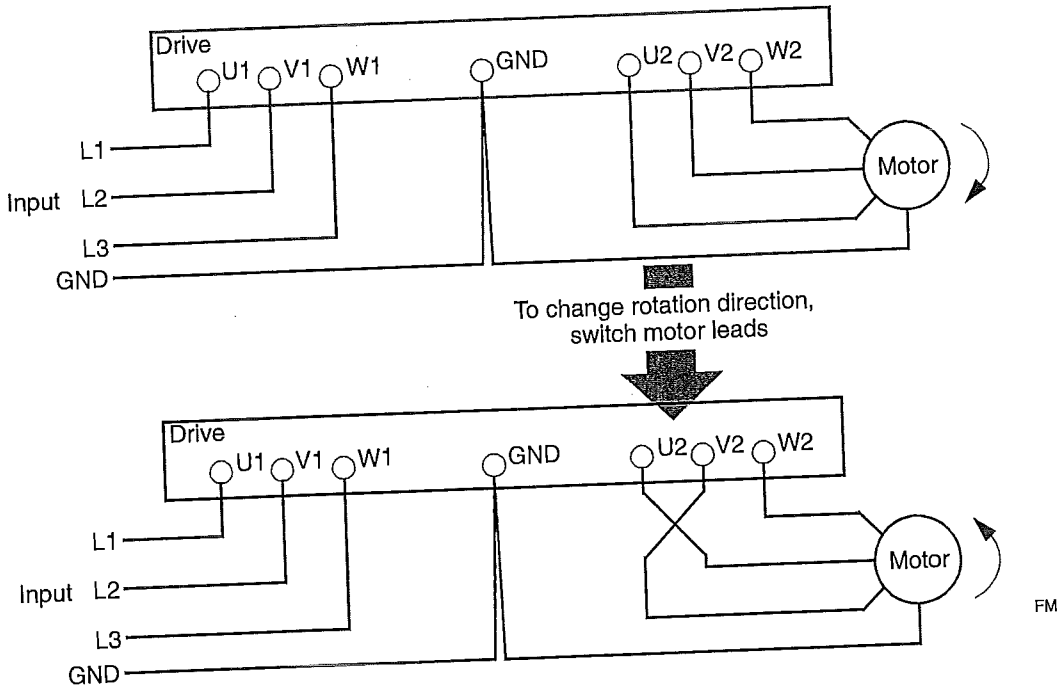

9. Before Start-up

The ACH550 has default parameter settings that are sufficient for many situations. However, review the following situations. Perform the associated procedures as appropriate.

Spin motor

When first installed and started the control panel displays a welcome screen with the following options.

- Press Exit to commission the drive as described in section *Start-up by changing the parameters individually* on page *23*.
- Press Enter to move to the following options:
  - Select "Commission Drive" to commission the drive as described in section Start-Up by *Start-up by using the Start-Up Assistant* on page *23*.
  - Select "Spin Motor" to operate the motor prior to commissioning. This option

operates the motor without any commissioning, except entry of the motor data as described below. Spin Motor is useful, for example, to operate ventilation fans prior to commissioning.

Note: When using Spin Motor, the motor speed is limited to the range 1/3...2/3 of maximum speed. Also, no interlocks are activated. Finally, once the drive is commissioned, the welcome screen and this option no longer appear.

Motor data

The motor data on the ratings plate may differ from the defaults in the ACH550. The drive provides more precise control and better thermal protection if you enter the rating plate data.

1. Gather the following from the motor ratings plate:
   - Voltage
   - Nominal motor current
   - Nominal frequency
   - Nominal speed
   - Nominal power
2. Edit parameters 9905...9909 to the correct values.
   - Assistant Control Panel: The Start-Up Assistant walks you through this data entry.
   - Basic Control Panel: Refer to *ACH550 User's Manual*, for parameter editing instructions.

Fault and alarm adjustments

The ACH550 can detect a wide variety of potential system problems. For example, initial system operation may generate faults or alarms that indicate set-up problems.

1. Faults and alarms are reported on the control panel with a number. Note the number reported.
2. Review the description provided for the reported fault/alarm:
   - Use the fault and alarm listings on pages *24* and *29* respectively, or
   - Press the help key (Assistant Control Panel only) while fault or alarm is displayed.
3. Adjust the system or parameters as appropriate.

Operation

The ACH550 HVAC control panel (ACS-CP-B) features:

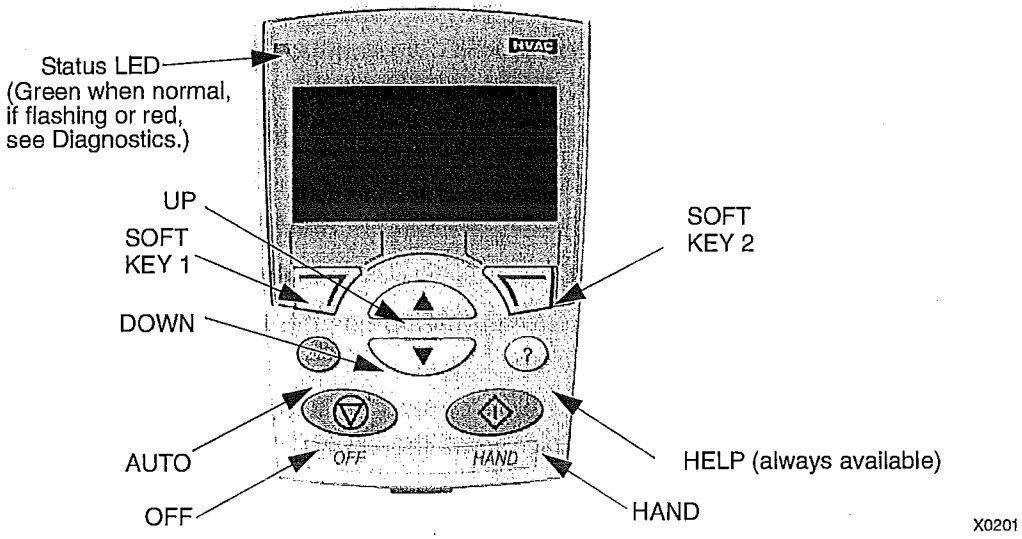

General display features

Soft key functions

The soft key functions are defined by text displayed just above each key.

Display contrast

To adjust display contrast, simultaneously press and or , as appropriate.

HVAC control panel modes

The HVAC control panel has several different modes for configuring, operating and diagnosing the drive. To reach the Standard Display Mode, press EXIT until the LCD display shows status information. Select MENU and use UP/DOWN buttons to select other modes. The modes are:

- **Standard Display Mode** – Shows drive status information and operates the drive.
- **Parameters Mode** – Edits parameter values individually.
- **Start-up Assistant Mode** – Guides the start-up and configuration.
- **Changed Parameters Mode** – Shows changed parameters.
- **Fault Logger Mode** – Shows the drive fault history.
- **Drive Parameter Backup Mode** – Stores or uploads the parameters.
- **Clock Set Mode** – Sets the time and date for the drive.
- **I/O Settings Mode** – Checks and edits the I/O settings.
- **Alarm Mode** – Reporting mode triggered by drive alarms.

Operating the drive

AUTO/HAND – The very first time the drive is powered up, it is in the auto control (AUTO) mode, and is controlled from the Control terminal block X1.

To switch to hand control (HAND) and control the drive using the control panel, press and hold the or button.

- Pressing the HAND button switches the drive to hand control while keeping the drive running.
- Pressing the OFF button switches to hand control and stops the drive.

To switch back to auto control (AUTO), press and hold the button.

Hand/Auto/Off – To start the drive press the HAND or AUTO buttons, to stop the drive press the OFF button.

Reference – To modify the reference (only possible if the display in the upper right corner is in reverse video) press the UP or DOWN buttons (the reference changes immediately).

The reference can be modified in the local control mode (HAND/OFF), and can be parameterized (using Group 11 reference select) to also allow modification in the remote control mode.

Note: The Start/Stop, Shaft direction and Reference functions are only valid in local control (HAND/OFF) mode.

Start-up by using the Start-Up Assistant

To start the Start-Up Assistant, follow these steps:

1	Select MENU to enter the main menu.		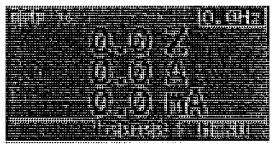
2	Select ASSISTANTS with the Up/Down buttons and select ENTER.		
3	Scroll to COMMISSION DRIVE with the Up/Down buttons.		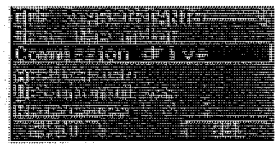
4	Change the values suggested by the assistant to your preferences and then press SAVE after every change.		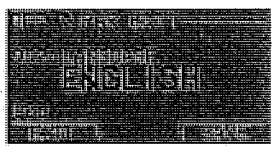

The Start-Up Assistant will guide you through the start-up.

Start-up by changing the parameters individually

To change the parameters, follow these steps:

1	Select MENU to enter the main menu.		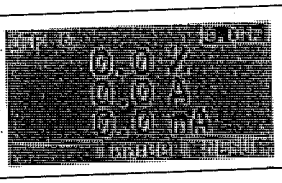
2	Select the Parameters mode with the UP/ DOWN buttons and select ENTER to select the Parameters mode.		
3	Select the appropriate parameter group with the UP/DOWN buttons and select SEL		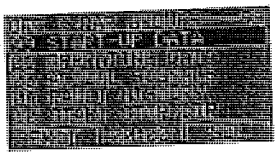
4	Select the appropriate parameter in a group with the UP/DOWN buttons. Select EDIT to change the parameter value.		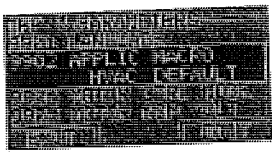
5	Press the UP/DOWN buttons to change the parameter value.		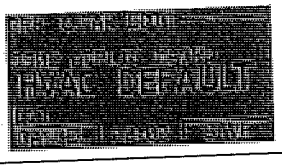
6	Select SAVE to store the modified value or select CANCEL to leave the set mode. Any modifications not saved are cancelled.		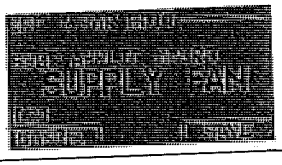
7	Select EXIT to return to the listing of parameter groups, and again to return to the main menu.		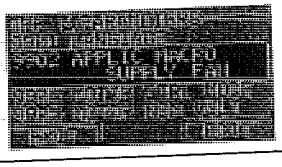

Complete the control connections by manually entering the parameters.

Note: The current parameter value appears below the highlighted parameter. To view the default parameter value, press the UP/DOWN buttons simultaneously. To restore the default factory settings, select the application macro HVAC Default.

Diagnostics

Fault listing

Fault Code	Fault Name In Panel	Description and Recommended Corrective Action
1	OVERCURRENT	Output current is excessive. Check for and correct: • Excessive motor load. • Insufficient acceleration time (parameters 2202 ACCELER TIME 1 and 2205 ACCELER TIME 2). • Faulty motor, motor cables or connections. • Output disconnect device not interlocked. • Interaction with external input filter.
2	DC OVERVOLT	Intermediate circuit DC voltage is excessive. Check for and correct: • Static or transient overvoltages in the input power supply. • Insufficient deceleration time (parameters 2203 DECELER TIME 1 and 2206 DECELER TIME 2). • Verify that overvoltage controller is ON (using parameter 2005). • Interaction with external input filter.
3	DEV OVERTEMP	Drive heatsink is overheated. Temperature is at or above limit. R1...R4 & R7/R8: 115 °C (239 °F) R5/R6: 125 °C (257 °F) Check for and correct: • Fan failure. • Obstructions in the air flow. • Dirt or dust coating on the heat sink. • Excessive ambient temperature. • Excessive motor load.
4	SHORT CIRC	Fault current. Check for and correct: • A short-circuit in the motor cable(s) or motor. • Supply disturbances.
5	RESERVED	Not used.
6	DC UNDERVOLT	Intermediate circuit DC voltage is not sufficient. Check for and correct: • Missing phase in the input power supply. • Blown fuse. • Undervoltage on mains.
7	AI1 LOSS	Analog input 1 loss. Analog input value is less than AI1FLT LIMIT (3021). Check for and correct: • Source and connection for analog input. • Parameter settings for AI1FLT LIMIT (3021) and 3001 AI<MIN FUNCTION.
8	AI2 LOSS	Analog input 2 loss. Analog input value is less than AI2FLT LIMIT (3022). Check for and correct: • Source and connection for analog input. • Parameter settings for AI2FLT LIMIT (3022) and 3001 AI<MIN FUNCTION.

Fault Code	Fault Name In Panel	Description and Recommended Corrective Action
9	MOT TEMP	Motor is too hot, based on either the drive's estimate or on temperature feedback. • Check for overloaded motor. • Adjust the parameters used for the estimate (3005...3009). • Check the temperature sensors and Group 35 parameters.
10	PANEL LOSS	Panel communication is lost and either: • Drive is in local control mode (the control panel displays HAND or OFF), or • Drive is in remote control mode (AUTO) and is parameterized to accept start/stop, direction or reference from the control panel. To correct check: • Communication lines and connections • Parameter 3002 PANEL COMM ERROR. • Parameters in Group 10: START/STOP/DIR and Group 11: REFERENCE SELECT (if drive operation is AUTO).
11	ID RUN FAIL	The motor ID run was not completed successfully. Check for and correct: • Motor connections • Motor parameters 9905...9909 do not match motor nameplate.
12	MOTOR STALL	Motor or process stall. Motor is operating in the stall region. Check for and correct: • Excessive load. • Insufficient motor power. • Parameters 3010...3012.
14	EXTERNAL FLT 1	Digital input defined to report first external fault is active. See parameter 3003 EXTERNAL FAULT 1.
15	EXTERNAL FLT 2	Digital input defined to report second external fault is active. See parameter 3004 EXTERNAL FAULT 2.
16	EARTH FAULT	Possible ground fault detected in the motor or motor cables. The drive monitors for ground faults while the drive is running and while the drive is not running. Detection is more sensitive when the drive is not running and can produce false positives. Possible corrections: • Check for/correct faults in the input wiring. • Verify that motor cable does not exceed maximum specified length. • A delta grounded input power supply and motor cables with high capacitance may result in erroneous error reports during non-running tests. To disable response to fault monitoring when the drive is not running, use parameter 3023 WIRING FAULT. To disable response to all ground fault monitoring, use parameter 3017 EARTH FAULT.
17	UNDERLOAD	Motor load is lower than expected. Check for and correct: • Disconnected load. • Group 37: USER LOAD CURVE.
18	THERM FAIL	Internal fault. The thermistor measuring the internal temperature of the drive is open or shorted. Contact your local ABB sales representative.
19	OPEX LINK	Internal fault. A communication-related problem has been detected on the fiber optic link between the OITF and OINT boards. Contact your local ABB sales representative.
20	OPEX PWR	Internal fault. Low voltage condition detected on OINT power supply. Contact your local ABB sales representative.

Fault Code	Fault Name In Panel	Description and Recommended Corrective Action
21	CURR MEAS	Internal fault. Current measurement is out of range. Contact your local ABB sales representative.
22	SUPPLY PHASE	Ripple voltage in the DC link is too high. Check for and correct: • Missing mains phase. • Blown fuse. • Interaction with external input filter. Set parameter 2619 to "ON".
23	ENCODER ERR	Not used (Available only with encoder and parameter Group 50).
23	ENCODER ERR	The drive is not detecting a valid encoder signal. Check for and correct: • Encoder presence and proper connection (reverse wired, loose connection, or short circuit). • Voltage logic levels are outside of the specified range. • A working and properly connected Pulse Encoder Interface Module, OTAC-01. • Wrong value entered in parameter 5001 PULSE NR. A wrong value will only be detected if the error is such that the calculated slip is greater than 4 times the rated slip of the motor. • Encoder is not being used, but parameter 5002 ENCODER ENABLE = 1 (ENABLED).
24	OVERSPEED	Motor speed is greater than 120% of the larger (in magnitude) of 2001 MINIMUM SPEED or 2002 MAXIMUM SPEED. Check for and correct: • Parameter settings for 2001 and 2002. • Adequacy of motor braking torque. • Applicability of torque control. • Brake chopper and resistor.
25	RESERVED	Not used as of the publication of this manual.
26	DRIVE ID	Internal fault. Configuration Block Drive ID is not valid. Contact your local ABB sales representative.
27	CONFIG FILE	Internal configuration file has an error. Contact your local ABB sales representative.
28	SERIAL 1 ERR	Fieldbus communication has timed out. Check for and correct: • Fault setup (3018 COMM FAULT FUNC and 3019 COMM FAULT TIME). • Communication settings (Group 51 or 53 as appropriate). • Poor connections and/or noise on line.
29	EFB CONFIG FILE	Error in reading the configuration file for the embedded fieldbus.
30	FORCE TRIP	Fault trip forced by the fieldbus. See the fieldbus User's Manual.
31	EFB 1	Fault code reserved for the embedded fieldbus (EFB) protocol application. These codes are not used as of the publication of this manual.
32	EFB 2	
33	EFB 3	
34	MOTOR PHASE	Fault in the motor circuit. One of the motor phases is lost. Check for and correct: • Motor fault. • Motor cable fault. • Thermal relay fault (if used). • Internal fault.

Fault Code	Fault Name In Panel	Description and Recommended Corrective Action
35	OUTPUT WIRING	Possible power wiring error detected. When the drive is not running it monitors for an improper connection between the drive input power and the drive output. Check for and correct: • Proper input wiring – line voltageis NOT connected to drive output. • The fault can be erroneously declared if the input power is a delta grounded system and motor cable capacitance is large. This fault can be disabled using parameter 3023 WIRING FAULT.
36	INCOMP SWTYPE	The drive cannot use the software. • Internal Fault. • The loaded software is not compatible with the drive. • Call support representative.
37	CB OVERTEMP	Drive control board is overheated. Check for and correct: • Excessive ambient temperatures • Fan failure. • Obstructions in the air flow.
101	SERF CORRUPT	Error internal to the drive. Contact your local ABB sales representative and report the error number.
102	RESERVED	
103	SERF MACRO	
104	RESERVED	
105	RESERVED	
201	DSP T1 OVERLOAD	Error in the system. Contact your local ABB sales representative and report the error number.
202	DSP T2 OVERLOAD	
203	DSP T3 OVERLOAD	
204	DSP STACK ERROR	
205	RESERVED (obsolete)	
206	OMIO ID ERROR	
207	EFB LOAD ERR	
1000	PAR HZRPM LIMITS	Parameter values are inconsistent. Check for any of the following: • 2001 MINIMUM SPEED > 2002 MAXIMUM SPEED. • 2007 MINIMUM FREQ > 2008 MAXIMUM FREQ. • 2001 MINIMUM SPEED / 9908 MOTOR NOM SPEED is outside proper range (> 50) • 2002 MAXIMUM SPEED / 9908 MOTOR NOM SPEED is outside proper range (> 50) • 2007 MINIMUM FREQ / 9907 MOTOR NOM FREQ is outside proper range (> 50) • 2008 MAXIMUM FREQ / 9907 MOTOR NOM FREQ is outside proper range (> 50)
1001	PAR PFAREFNG	Parameter values are inconsistent. Check for the following: • 2007 MINIMUM FREQ is negative, when 8123 PFA ENABLE is active.

Fault Code	Fault Name In Panel	Description and Recommended Corrective Action
1002	RESERVED (Obsolete)	
1003	PAR AI SCALE	Parameter values are inconsistent. Check for any of the following: • 1301 AI 1 MIN > 1302 AI 1 MAX. • 1304 AI 2 MIN > 1305 AI 2 MAX.
1004	PAR AO SCALE	Parameter values are inconsistent. Check for any of the following: • 1504 AO 1 MIN > 1505 AO 1 MAX. • 1510 AO 2 MIN > 1511 AO 2 MAX.
1005	PAR PCU 2	Parameter values for power control are inconsistent: Improper motor nominal kVA or motor nominal power. Check for the following: • $1.1 \leq$ (9906 MOTOR NOM CURR * 9905 MOTOR NOM VOLT * 1.73 / P_N) ≤ 3.0 • Where: P_N = 1000 * 9909 MOTOR NOM POWER (if units are kW) or P_N = 746 * 9909 MOTOR NOM POWER (if units are HP, e.g. in US)
1006	EXT ROMISSING	Parameter values are inconsistent. Check for the following: • Extension relay module not connected and • 1410...1412 RELAY OUTPUTS 4...6 have non-zero values.
1007	PAR FBUSMISSING	Parameter values are inconsistent. Check for and correct: • A parameter is set for fieldbus control (e.g. 1001 EXT1 COMMANDS = 10 (COMM)), but 9802 COMM PROT SEL = 0.
1008	PAR PFAWOSCALAR	Parameter values are inconsistent – 9904 MOTOR CTRL MODE must be = 3 (SCALAR: SPEED), when 8123 PFA ENABLE is activated.
1009	PAR PCU1	Parameter values for power control are inconsistent: Improper motor nominal frequency or speed. Check for both of the following: • $1 \leq$ (60 * 9907 MOTOR NOM FREQ / 9908 MOTOR NOM SPEED ≤ 16 • $0.8 \leq$ 9908 MOTOR NOM SPEED / (120 * 9907 MOTOR NOM FREQ / Motor Poles) ≤ 0.992
1010	PAR PFA OVERRIDE	Both the override mode and PFA are activated at the same time. These modes are mutually incompatible, because PFA interlocks cannot be observed in the override mode.
1011	PAR OVERRIDE PARS	Overeride is enabled, but parameters are incompatible. Verify that 1701 is not zero, and (depending on 9904 value) 1702 or 1703 is not zero.
1012	PAR PFA IO 1	IO configuration is not complete – not enough relays are parameterized to PFA. Or, a conflict exists between Group 14, parameter 8117, NR OF AUX MOT, and parameter 8118, AUTOCHNG INTERV.
1013	PAR PFA IO 2	IO configuration is not complete – the actual number of PFA motors (parameter 8127, MOTORS) does not match the PFA motors in Group 14 and parameter 8118 AUTOCHNG INTERV.
1014	PAR PFA IO 3	IO configuration is not complete – the drive is unable to allocate a digital input (interlock) for each PFA motor (parameters 8120 INTERLOCKS and 8127 MOTORS).

Fault history

For reference, the last three fault codes are stored into parameters 0401, 0412, 0413. For the most recent fault (identified by parameter 0401), the drive stores additional data (in parameters 0402...0411) to aid in troubleshooting a problem. For example, parameter 0404 stores the motor speed at the time of the fault.

To clear the fault history (all of the Group 04, Fault History parameters):

1. Using the control panel in Parameters mode, select parameter 0401.
2. Press EDIT.
3. Press UP and Down simultaneously.
4. Press SAVE.

Alarm listing

The following table lists the alarms by code number and describes each.

Alarm Code	Display	Description
2001	OVERCURRENT	Current limiting controller is active. Check for and correct: • Excessive motor load. • Insufficient acceleration time (parameters 2202 ACCELER TIME 1 and 2205 ACCELER TIME 2). • Faulty motor, motor cables or connections. • Output disconnect device not interlocked. • Interaction with external input filter.
2002	OVERVOLTAGE	Over voltage controller is active. Check for and correct: • Static or transient overvoltages in the input power supply. • Insufficient deceleration time (parameters 2203 DECELER TIME 1 and 2206 DECELER TIME 2). • Interaction with external input filter.
2003	UNDERVOLTAGE	Under voltage controller is active. Check for and correct: • Undervoltage on mains.
2004	DIR LOCK	The change in direction being attempted is not allowed. Either: • Do not attempt to change the direction of motor rotation, or • Change parameter 1003 DIRECTION to allow direction change (if reverse operation is safe).
2005	I/O COMM	Fieldbus communication has timed out. Check for and correct: • Fault setup (3018 COMM FAULT FUNC and 3019 COMM FAULT TIME). • Communication settings (Group 51 or 53 as appropriate). • Poor connections and/or noise on line.
2006	AI1 LOSS	Analog input 1 is lost, or value is less than the minimum setting. Check: • Input source and connections • Parameter that sets the minimum (3021) • Parameter that sets the Alarm/Fault operation (3001)
2007	AI2 LOSS	Analog input 2 is lost, or value is less than the minimum setting. Check: • Input source and connections • Parameter that sets the minimum (3022) • Parameter that sets the Alarm/Fault operation (3001)

Alarm Code	Display	Description
2008	PANEL LOSS	Panel communication is lost and either: • Drive is in local control mode (the control panel displays HAND or OFF), or • Drive is in remote control mode (AUTO) and is parameterized to accept start/stop, direction or reference from the control panel. To correct check: • Communication lines and connections • Parameter 3002 PANEL LOSS. • Parameters in Groups 10 START/STOP/DIR and 11: REFERENCE SELECT (if drive operation is AUTO).
2009	DEVICE OVERTEMP	Drive heatsink is hot. This alarm warns that a DEVICE OVERTEMP fault may be near. R1...R4 & R7/R8: 100 °C (212 °F) R5/R6: 110 °C (230 °F) Check for and correct: • Fan failure. • Obstructions in the air flow. • Dirt or dust coating on the heat sink. • Excessive ambient temperature. • Excessive motor load.
2010	MOT OVERTEMP	Motor is hot, based on either the drive's estimate or on temperature feedback. This alarm warns that a Motor Underload fault trip may be near. Check: • Check for overloaded motor. • Adjust the parameters used for the estimate (3005...3009). • Check the temperature sensors and Group 35 parameters.
2011	UNDERLOAD	Motor load is lower than expected. This alarm warns that a Motor Underload fault trip may be near. Check: • Motor and drive ratings match (motor is NOT undersized for the drive) • Settings Group 37: USER LOAD CURVE
2012	MOTOR STALL	Motor is operating in the stall region. This alarm warns that a Motor Stall fault trip may be near.
2013 (note 1)	AUTORESET	This alarm warns that the drive is about to perform an automatic fault reset, which may start the motor. • To control automatic reset, use parameter Group 31: AUTOMATIC RESET.
2014 (note 1)	AUTOCHANGE	This alarm warns that the PFA autochange function is active. • To control PFA, use parameter Group 81: PFA CONTROL
2015	PFA INTERLOCK	This alarm warns that the PFA interlocks are active, which means that the drive cannot start the following: • Any motor (when Autochange is used), • The speed regulated motor (when Autochange is not used).
2016	Reserved	
2017	OFF BUTTON	Note 1.
2018 (note 1)	PID SLEEP	This alarm warns that the PID sleep function is active, which means that the motor could accelerate when the PID sleep function ends. • To control PID sleep, use parameters 4022...4026 or 4122...4126.

Alarm Code	Display	Description
2019	ID RUN	Performing ID run.
2020	OVERRIDE	This alarm warns that the Override function is active, which may start the motor.
2021	START ENABLE 1 MISSING	This alarm warns that the Start Enable 1 signal is missing. • To control Start Enable 1 function, use parameter 1608. To correct, check: • Digital input configuration. • Communication settings.
2022	START ENABLE 2 MISSING	This alarm warns that the Start Enable 2 signal is missing. • To control Start Enable 2 function, use parameter 1609. To correct, check: • Digital input configuration. • Communication settings.
2023	EMERGENCY STOP	Emergency stop activated.
2024	ENCODER ERROR	The drive is not detecting a valid encoder signal. Check for and correct: • Encoder presence and proper connection (reverse wired, loose connection, or short circuit). • Voltage logic levels are outside of the specified range. • A working and properly connected Pulse Encoder Interface Module, OTAC-01. • Wrong value entered in parameter 5001 PULSE NR. A wrong value will only be detected if the error is such that the calculated slip is greater than 4 times the rated slip of the motor. • Encoder is not being used, but parameter 5002 ENCODER ENABLE = 1 (ENABLED).
2025	FIRST START	Signals that a the drive is performing a First Start evaluation of motor characteristics. This is normal the first time the motor is run after motor parameters are entered or changed. See parameter 9910 (MOTOR ID RUN) for a description of motor models.
2026	RESERVED	Not used.
2027	USER LOAD CURVE	This alarm warns that the condition defined by parameter 3701 USER LOAD C MODE has been valid longer that half of the time difined by 3703 USER LOAD C TIME.
2028	START DELAY	Shown during the Start delay. See parameter 2113 START DELAY.

Note 1. Even when the relay output is configured to indicate alarm conditions (e.g. parameter 1401 RELAY OUTPUT 1 = 5 (ALARM) or 16 (FLT/ALARM)), this alarm is not indicated by a relay output.

Maintenance

Warning! Read *Safety* on page *2* before performing any maintenance on the equipment. Ignoring the safety instructions can cause injury or death.

Maintenance intervals

If installed in an appropriate environment, the drive requires very little maintenance. This table lists the routine maintenance intervals recommended by ABB.

Maintenance	Application	Interval	Instruction
Check/replace R7/R8 enclosure inlet air filter	R7/R8 UL type 12 enclosures	Check every 3 months. Replace as needed.	*Frame Sizes R7/R8 – UL type 12 enclosure inlet air filter on page 35*
Check/replace R7/R8 enclosure exhaust air filter.	R7/R8 UL type 12 enclosures	Check every 6 months. Replace as needed.	*Frame Sizes R7/R8 – UL type 12 enclosure exhaust filters on page 37*
Check and clean heatsink.	All	Depends on the dustiness of the environment (every 6...12 months)	See *Heatsink* below.
Replace drive module fan.	All	Every six years	See *Drive module fan replacement on page 33.*
Replace enclosure fan.	UL type 12 enclosures	Every three years.	See *Enclosure fan replacement – UL Type 12 enclosures on page 34.*
Change capacitor.	Frame sizes R5, R6 and R8	Every ten years	See *Capacitors on page 38.*
Replace battery in the Assistant control panel	All	Every ten years	See *Control panel on page 38.*

Heatsink

The heatsink fins accumulate dust from the cooling air. Since a dusty heatsink is less efficient at cooling the drive, overtemperature faults become more likely. In a "normal" environment (not dusty, not clean) check the heatsink annually, in a dusty environment check more often.

Clean the heatsink as follows (when necessary):

1. Remove power from drive.
2. Remove the cooling fan (see section *Drive module fan replacement* on page *33*).
3. Blow clean compressed air (not humid) from bottom to top and simultaneously use a vacuum cleaner at the air outlet to trap the dust.

Note: If there is a risk of the dust entering adjoining equipment, perform the cleaning in another room.

---

4. Replace the cooling fan.
5. Restore power.

Drive module fan replacement

The drive module fan cools the heatsink. Fan failure can be predicted by the increasing noise from fan bearings and the gradual rise in the heatsink temperature in spite of heatsink cleaning. If the drive is operated in a critical part of a process, fan replacement is recommended once these symptoms start appearing. Replacement fans are available from ABB. Do not use other than ABB specified spare parts.

To monitor the running time of the cooling fan, see *Group 29: MAINTENANCE TRIG* instructions.

Frame Sizes R1...R4

To replace the fan:

1. Remove power from drive.
2. Remove drive cover.
3. For Frame Size:
   - R1, R2: Press together the retaining clips on the fan cover sides, and lift.
   - R3, R4: Press in on the lever located on the left side of the fan mount, and rotate the fan up and out.
4. Disconnect the fan cable.
5. Install the fan in reverse order.
6. Restore power.

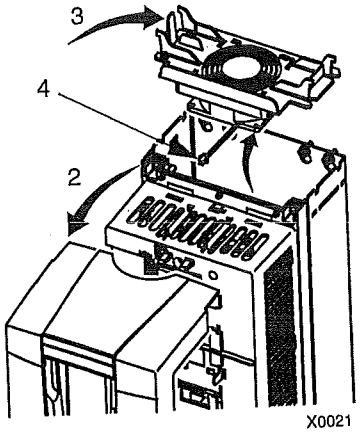

Frame Sizes R5 and R6

To replace the fan:

1. Remove power from drive.
2. Remove the screws attaching the fan.
3. Remove the fan:
   - R5: Swing the fan out on its hinges.
   - R6: Pull the fan out.
4. Disconnect the fan cable.
5. Install the fan in reverse order.
6. Restore power.

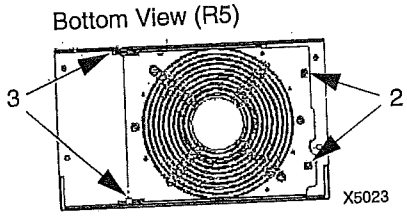

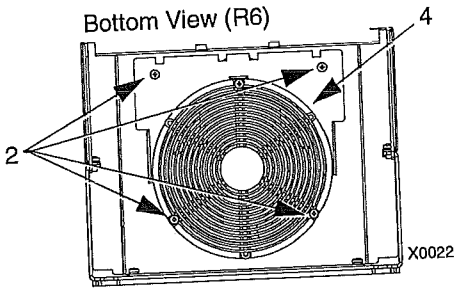

Frame Sizes R7 and R8

Refer to the installation instructions supplied with the fan kit.

Enclosure fan replacement – UL Type 12 enclosures

UL type 12 enclosures include an additional fan (or fans) to move air through the enclosure.

Frame Sizes R1 to R4

To replace the internal enclosure fan in frame sizes R1 to R4:

1. Remove power from drive.
2. Remove the front cover.
3. The housing that holds the fan in place has barbed retaining clips at each corner. Press all four clips toward the center to release the barbs.
4. When the clips/barbs are free, pull the housing up to remove from the drive.
5. Disconnect the fan cable.
6. Install the fan in reverse order, noting that:
   - The fan air flow is up (refer to arrow on fan).
   - The fan wire harness is toward the front.
   - The notched housing barb is located in the right-rear corner.
   - The fan cable connects just forward of the fan at the top of the drive.

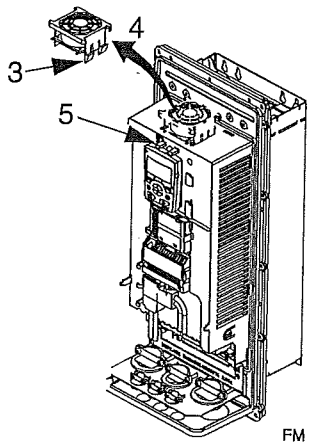

Frame Sizes R5 and R6

To replace the internal enclosure fan in frame sizes R5 or R6:

- Remove power from drive.
- Remove the front cover.
- Lift the fan out and disconnect the cable.
- Install the fan in reverse order.
- Restore power.

Frame Sizes R7/R8 – UL type 12 enclosures

The enclosure fan is located in the exhaust box on top of the UL type 12 enclosure.

1. Remove the left and right filter frames of the exhaust fan box by lifting them upwards.

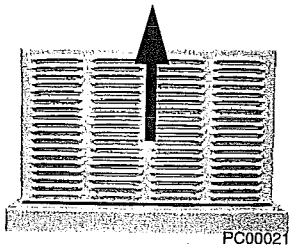

2. Disconnect the fan's electrical connector from the cabinet roof (top right inside the cabinet).

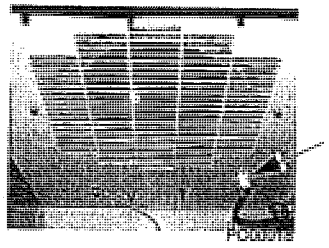

3. Undo the four fastening screws at the corners of the fan frame. The screws are through bolts with nuts on the inside of the cabinet. (Do not drop the hardware into the drive).

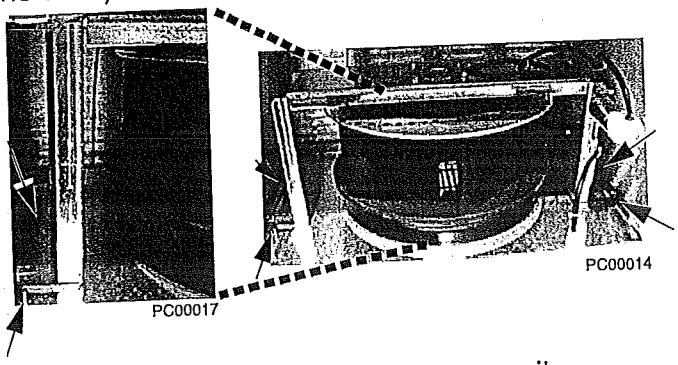

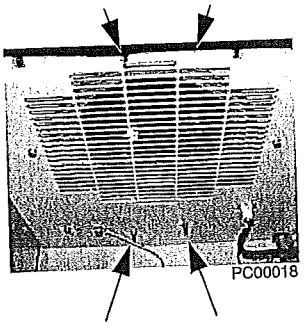

4. Remove the fan and fan frame as one unit.

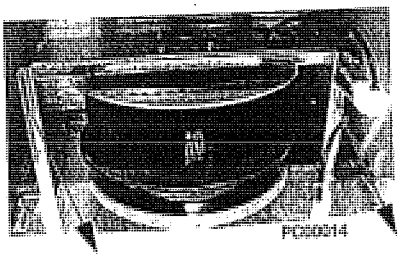

5. Disconnect the fan wiring and capacitor from the fan frame. Then remove the four screws attaching the fan to the fan frame. Remove the old fan.

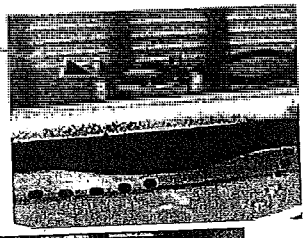

6. Install the new fan and capacitor with the replacement part for ABB in the reverse order of the above. Ensure the fan is centered on the velocity stack and rotates freely.

Enclosure air filter replacement – UL Type 12 enclosures

Frame Sizes R7/R8 – UL type 12 enclosure inlet air filter

The inlet air filter for the R7/R8 UL type 12 enclosure is located in the enclosure front door.

1. While holding the top of the filter frame, pull up on the bottom of the frame. The filter frame will slide up approximately 3/4 inch and can then safely removed by tilting away from the cabinet and lifting up.

2. Lay the filter frame on a flat work surface. Remove the 3 retaining brackets by squeezing the tabbed corners in towards the middle of each bracket until the bracket clears the filter frame. Save these brackets for replacement. Remove and inspect the filter.

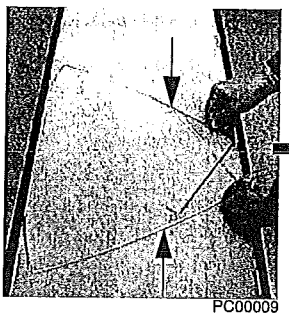
PC00009

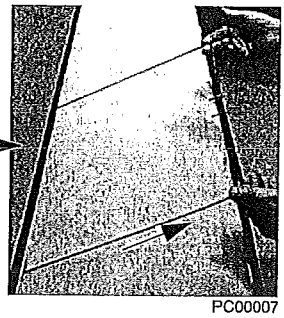
PC00007

3. Install the replacement filter. Be sure to tuck the filter into the grove around the entire filter frame. This is very important for proper installation.

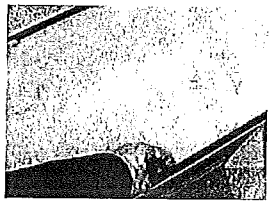
PC00013

4. Reinstall the 3 filter restraining brackets. These will prevent the filter from being pulled out of the filter frame.
   - Install the center bracket first.
   - Install the 2nd bracket overlapping the center bracket by 1/2 to the left.
   - Install the 3nd bracket overlapping the center bracket by 1/2 to the right.

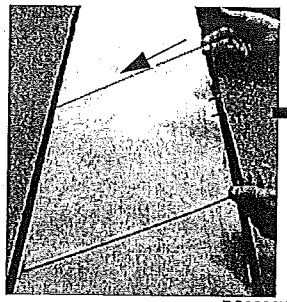
PC00007

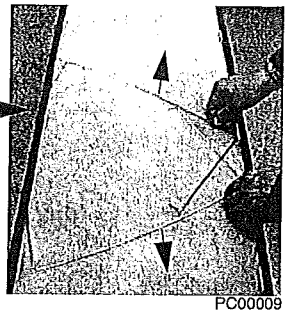
PC00009

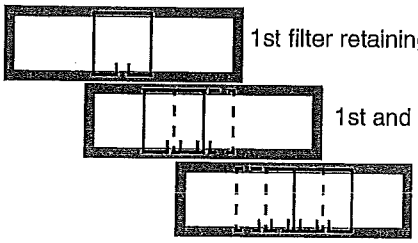

5. Install the filter frame back to the cabinet door. Carefully align the mounting hooks to the slots in the cabinet door. The hooks should be pointing down. Press in at the center of the filter frame with your knee and gently press down with your hands at the top of the frame. The filter frame will slide down approximately 3/4 inch and should be sealed securely to the door around the entire filter frame.

Frame Sizes R7/R8 – UL type 12 enclosure exhaust filters

The exhaust filters in the R7/R8 UL type 12 enclosure are located in the exhaust box at the top of the enclosure.

There are 2 filter frames attached to the exhaust box.

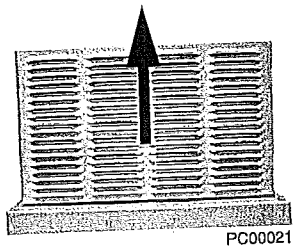
PC00021

1. Remove each filter frame:
   - Lift up on the filter frame until it slides approximately 3/4 inch.
   - Pull away from the exhaust box to remove.
2. For each filter frame, remove the wire retainers that hold the filters in place:
   - Lay the filter frames on a flat work surface.
   - The wire retainers have a square "U" shape. Remove by squeezing the open end of the "U" towards the middle of the "square" until the retainer top (open end of "U") clears the filter frame.

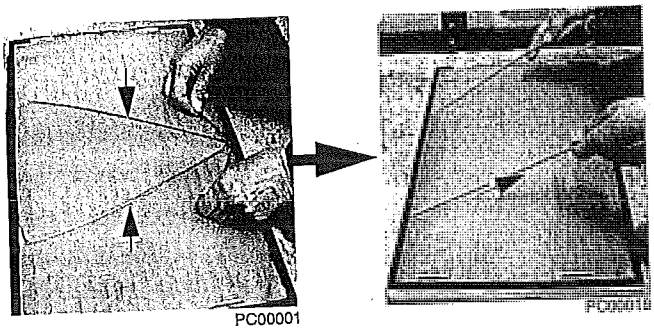
PC00001

   - Save the retainers for reinstallation.
3. Remove and inspect the filter.
4. Install clean filters.

Note: When installing DUSTLOK® filter media, the white side must face to outside of the cabinet, and the orange side faces in.
Be sure to tuck the filter edges into the groove around the entire filter frame. This detail is very important for proper operation.

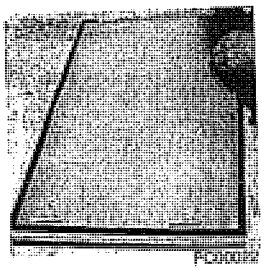

5. Reinstall the filter restrainers.
   - Insert the base of a retainer (bottom of "U" shape) into a filter frame channel.
   - Squeeze the open end of the "U" until it clears the filter frame.
   - Seat the open end of the "U" in the filter frame channel.
   - Release the retainer to its relaxed, square shape.

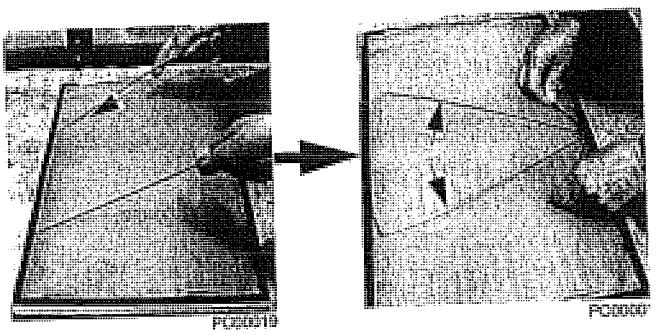

6. Install each filter frame to the bonnet on top of the cabinet.
   - Carefully align the frame's mounting hooks with the slots in the bonnet. (The hooks should be pointing down.)
   - Press down at the top of the filter frame. (The filter frame slides down approximately 3/4 inch).
   - Check all around the filter frame for a secure seal to the exhaust box.

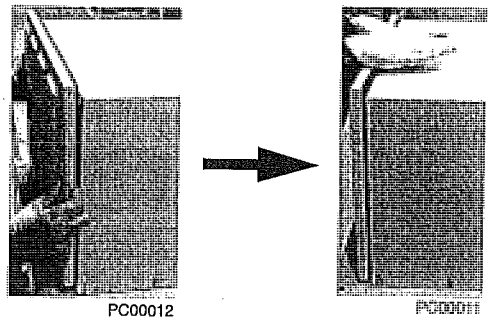
PC00012

Capacitors

The drive intermediate circuit employs several electrolytic capacitors. Their life span is from 35,000...90,000 hours depending on drive loading and ambient temperature. Capacitor life can be prolonged by lowering the ambient temperature.

It is not possible to predict a capacitor failure. Capacitor failure is usually followed by a input power fuse failure or a fault trip. Contact ABB if capacitor failure is suspected. Replacements for frame size R5, R6 and R8 are available from ABB. Do not use other than ABB specified spare parts.

Control panel

Cleaning

Use a soft damp cloth to clean the control panel. Avoid harsh cleaners which could scratch the display window.

Battery

A battery is only used in Assistant control panels that have the clock function available and enabled. The battery keeps the clock operating in memory during power interruptions.

The expected life for the battery is greater than ten years. To remove the battery, use a coin to rotate the battery holder on the back of the control panel. Replace the battery with type CR2032.

Note: The battery is NOT required for any control panel or drive function, except the clock.

ACH550 E-Clipse Bypass

Installation – drive

Follow the *Installation* instructions for the drive on page *3*. **Failure to observe the warnings and instructions may cause a malfunction or personal hazard.**

WARNING! Before you begin read *Safety* on page *2*.

Installation – bypass

WARNING! When the ACH550 with E-Clipse Bypass is connected to the line power, the Motor Terminals T1, T2, and T3 are live even if the motor is not running. Do not make any connections when the ACH550 with E-Clipse Bypass is connected to the line. Disconnect and lock out power to the drive before servicing the drive. Failure to disconnect power may cause serious injury or death.

1. Install wiring – bypass

WARNING!

- Do not connect or disconnect input or output power wiring, or control wires, when power is applied.
- Never connect line voltage to drive output Terminals T1, T2, and T3.
- Do not make any voltage tolerance tests (Hi Pot or Megger) on any part of the unit. Disconnect motor wires before taking any measurements in the motor or motor wires.
- Make sure that power factor correction capacitors are not connected between the drive and the motor.

Enclosure Designation	Horsepower Range by Voltage Rating		
	208/240V	480V	600V
V1/V2	1 to 7.5 HP	1 to 15 HP	2 to 15 HP
V3/V4	10 to 25 HP	20 to 60 HP	20 to 60 HP
B1	1 to 7.5 HP	1 to 15 HP	2 to 15 HP
B2	10 to 25 HP	20 to 60 HP	20 to 60 HP
B3	30 to 100 HP	75 to 200 HP	75 to 150 HP
B4	N/A	250 to 550 HP	N/A

Connection diagrams – Vertical E-Clipse Bypass

ACH550 Vertical E-Clipse Bypass units are configured for wiring access from the bottom only. The following figure shows the Vertical E-Clipse Bypass wiring connection points.

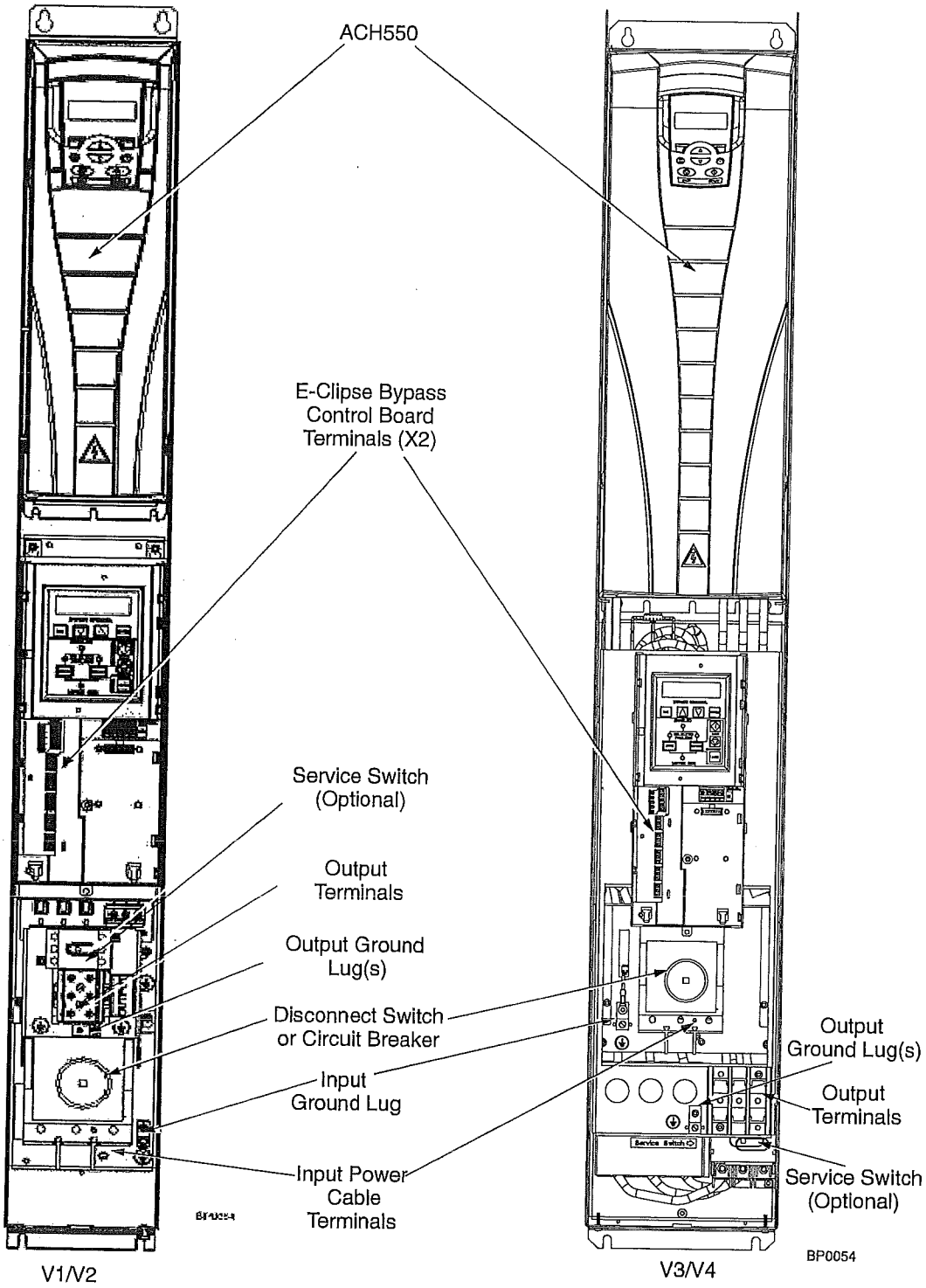

Connection diagrams – Standard E-Clipse Bypass (wall mounted)

ACH550 Standard E-Clipse Bypass units are configured for wiring access from the top. The following figure shows the Standard E-Clipse Bypass (wall mounted) wiring connection points.

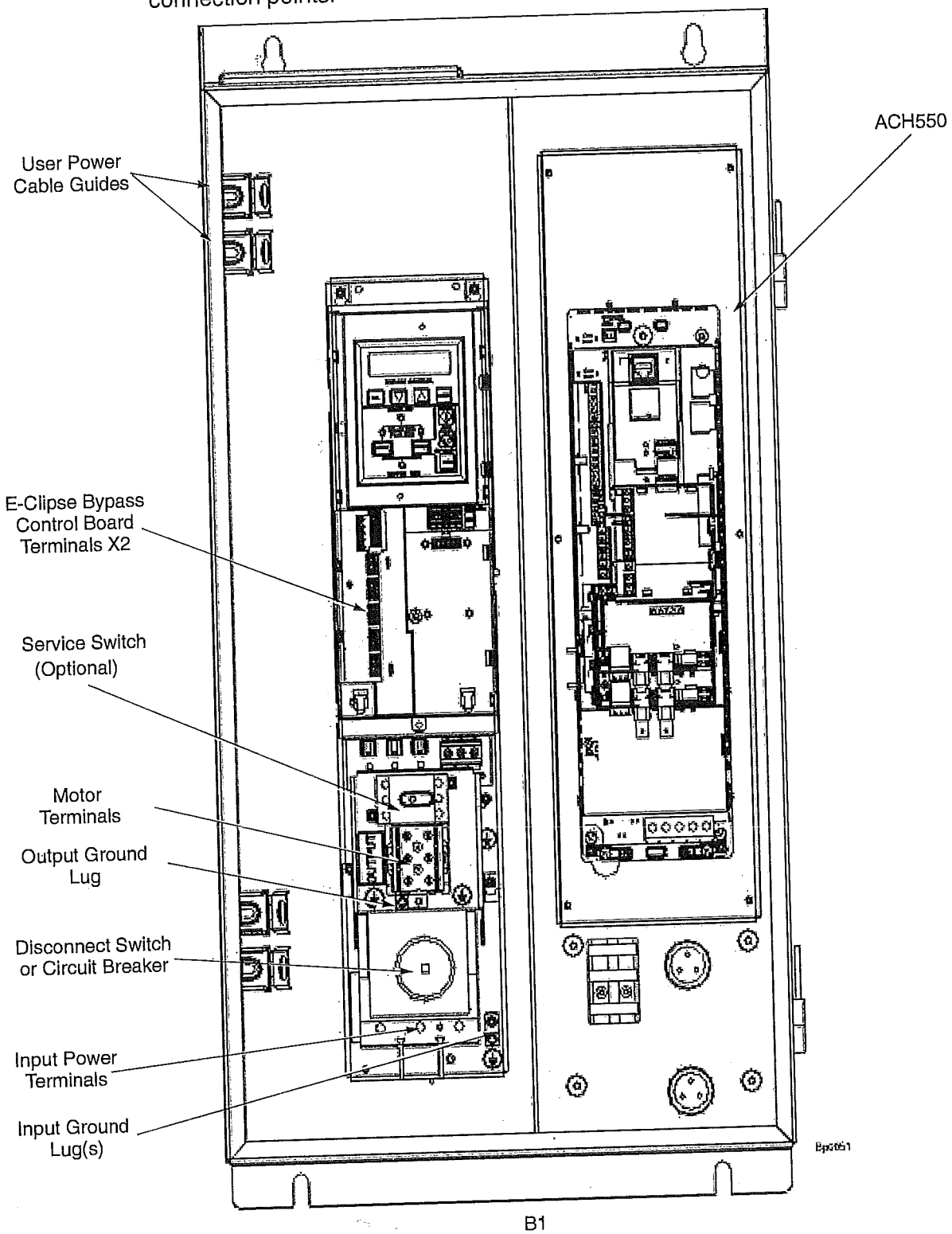

B1

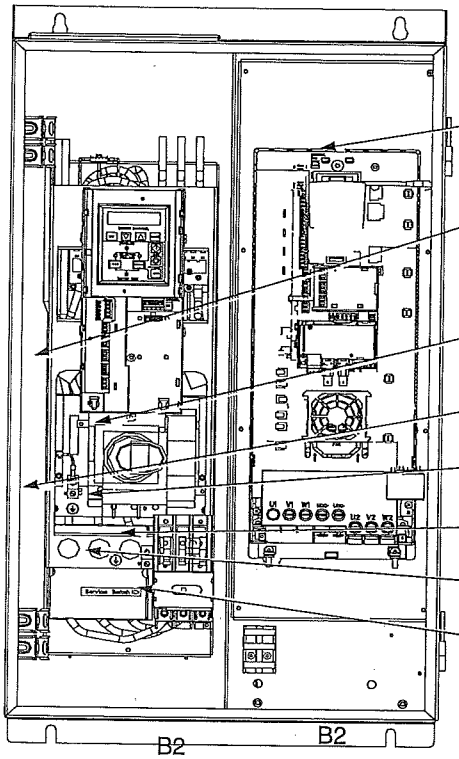

User PowerCable Guides
ACH550 Drive
E-Clipse Bypass Control Board Terminals (X2)
Disconnect Switch or Circuit Breaker
Input Ground Lug
Input Power Terminals
Motor Terminals
Output Ground Lug
Service Switch (optional)

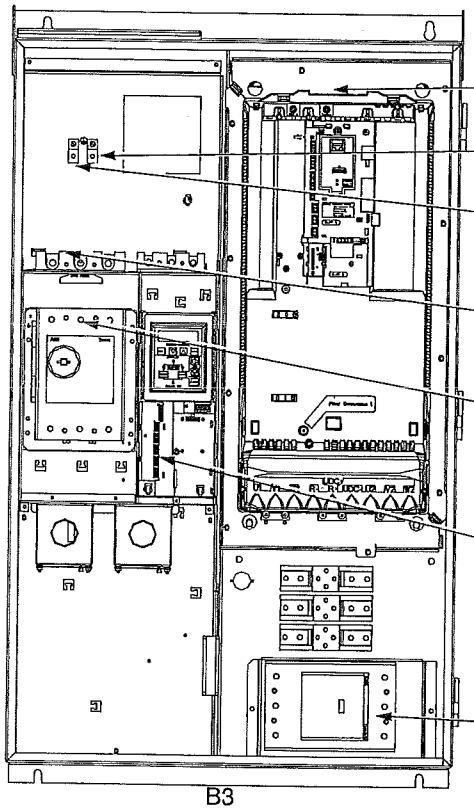

ACH550 Drive
Output Ground Lug
Input Ground Lug
Motor Terminals
Input Power Terminals
E-Clipse Bypass Control Board Terminals (X2)
Service Switch (optional)

Connection diagrams – Standard E-Clipse Bypass (R8, floor mounted)

ACH550 Standard E-Clipse Bypass units are configured for wiring access from the top. The following figure shows the Standard E-Clipse Bypass (floor mounted) wiring connection points.

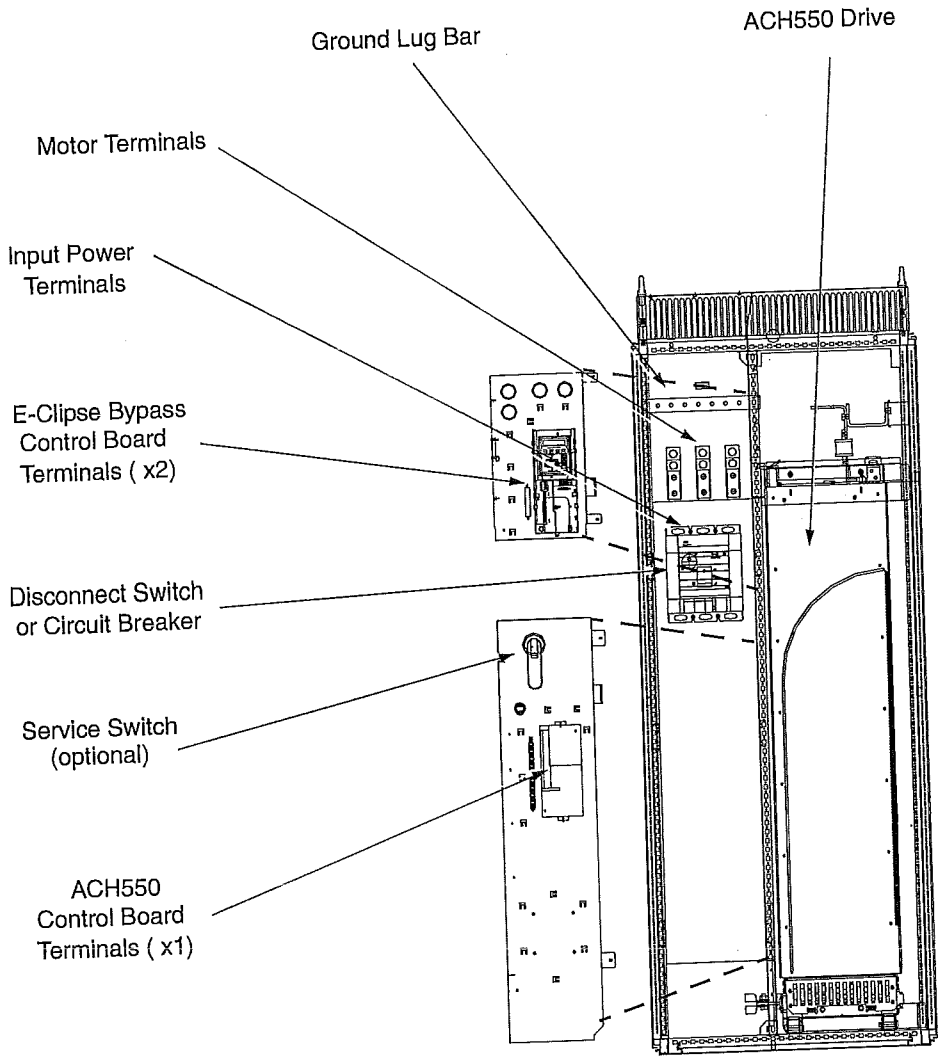

B4

Power connections – Vertical E-Clipse Bypass configurations

Line input connections

Connect the input power to the terminals at the bottom of the disconnect switch or circuit breaker as shown below. Also see *Connection diagrams – Vertical E-Clipse Bypass* on page *40*. Connect the equipment grounding conductor to the ground lug near the input power connection point.

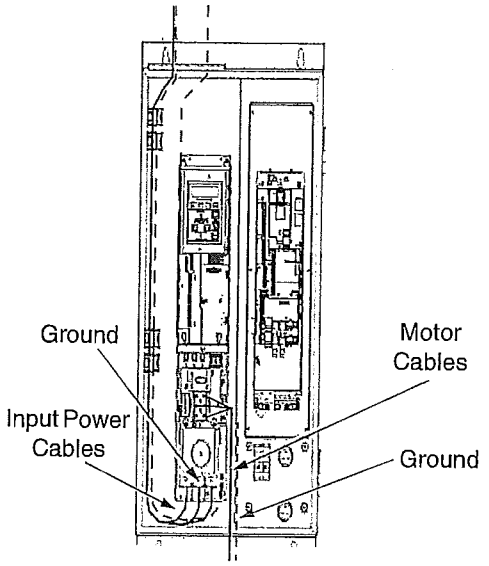

Motor connections

Connect the motor cables to the terminals at the bottom of the bypass section as shown in the figure. Also see *Connection diagrams – Vertical E-Clipse Bypass* on page *43*. Connect the motor grounding conductor to the ground lug near the motor cable terminal block connection point.

Power connections – Standard E-Clipse Bypass configurations (wall mounted)

Line input connections

Connect input power to the terminals of the disconnect switch or circuit breaker. Connect the equipment grounding conductor to the ground lug at the top of the enclosure. The figure below shows the connection points for Standard E-Clipse Bypass configurations. Also see *Connection diagrams – Standard E-Clipse Bypass (wall mounted)* on page *41* and *Connection diagrams – Standard E-Clipse Bypass (R8, floor mounted)* on page *43*.

Motor connections

Connect the motor cables to the output terminal block as shown in the figure below. Also see *Connection diagrams – Standard E-Clipse Bypass (wall mounted)* on page *41* and *Connection diagrams – Standard E-Clipse Bypass (R8, floor mounted)* on page *43*. The motor grounding conductor can be connected to the ground lug near the terminal block.

Note: Route cables through the cable guides on the left side of the enclosure. Use separate conduits for input power and motor cables. Follow the guides to separate the cables from each other.

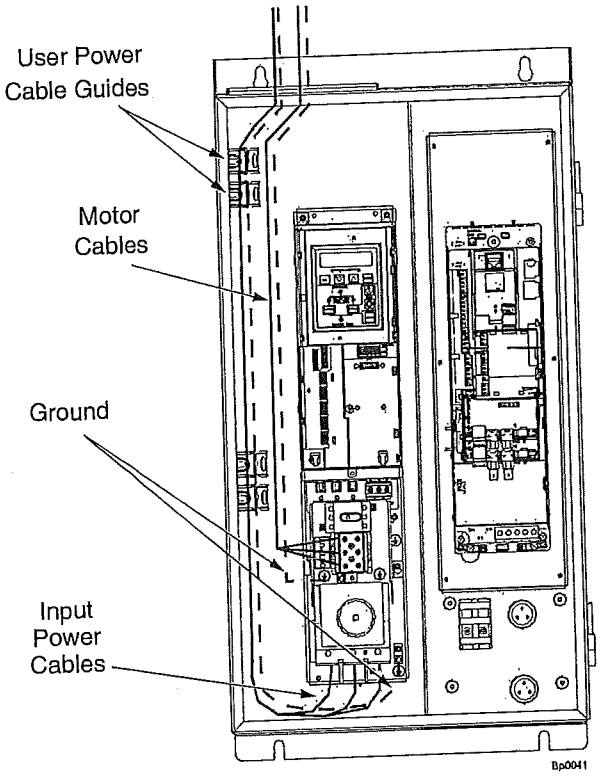

Standard Configuration (B1/B2)

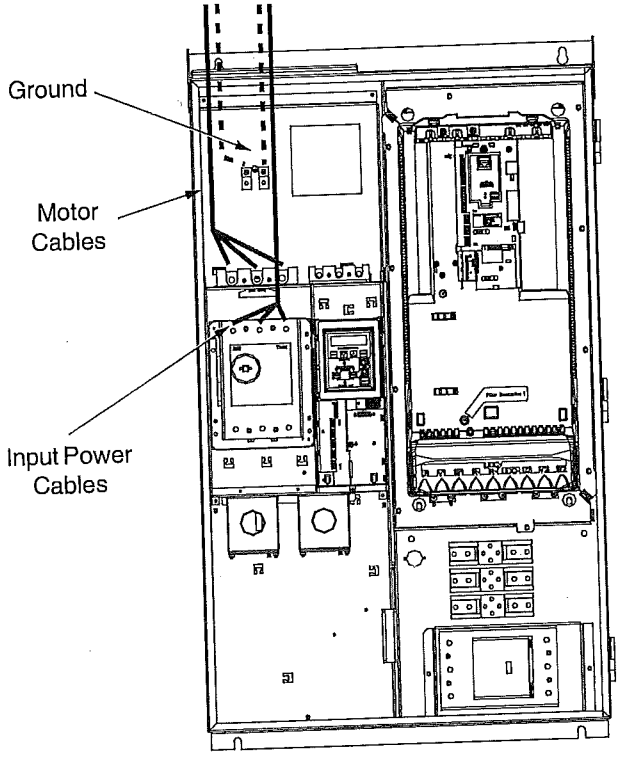

Standard Configuration (B3)

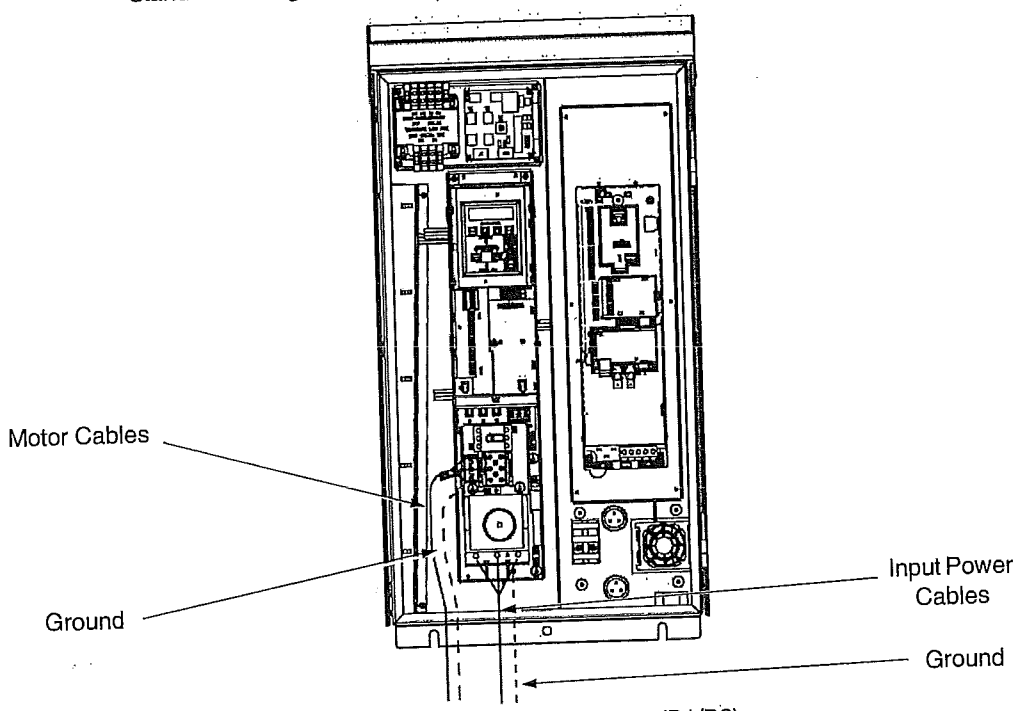

UL Type 3R Configuration (B1/B2)

Note: Type 3R enclosures are designed to be mounted on a wall. For 3R enclosure back plates which maintain 3R integrity when the enclosure is mounted on an open rack system, contact your ABB HVAC Drives Distributor.

WARNING! Check the motor and motor wiring insulation before connecting the ACH550 to line power. Follow the procedure on page *12*. Before proceeding with the insulation resistance measurements, check that the ACH550 is disconnected from incoming line power. Failure to disconnect line power could result in death or serious injury.

Install the control wiring

Connect control wiring to terminal block X1 on the ACH550 control board and to terminal block X2 on the E-Clipse Bypass control board. For more information on these connections, refer to the following:

- X1 terminal block location and terminal data are defined in the *ACH550-UH User's Manual*.
- X2 terminal block location is illustrated in the figures starting with *Connection diagrams – Vertical E-Clipse Bypass* on page *40*.
- X2 terminal data are provided in *Basic control connections for E-Clipse HVAC Default* on page *52*.
- Basic connections are described in the following paragraphs. Alternate configurations using the E-Clipse Bypass macro are described in the *ACH550 User's Manual*.
- On Terminal Block X1 inside the ACH550, analog inputs and outputs and additional digital input and relay output connections (AI1, AI2, AO1, AO2, DI1...DI6 and RO1...RO6) are available for use.

Note: The E-Clipse Bypass control circuitry uses serial communications connections (X1:28...X1:32) inside the ACH550. These connections are not available for any other purpose and must not be reconfigured.

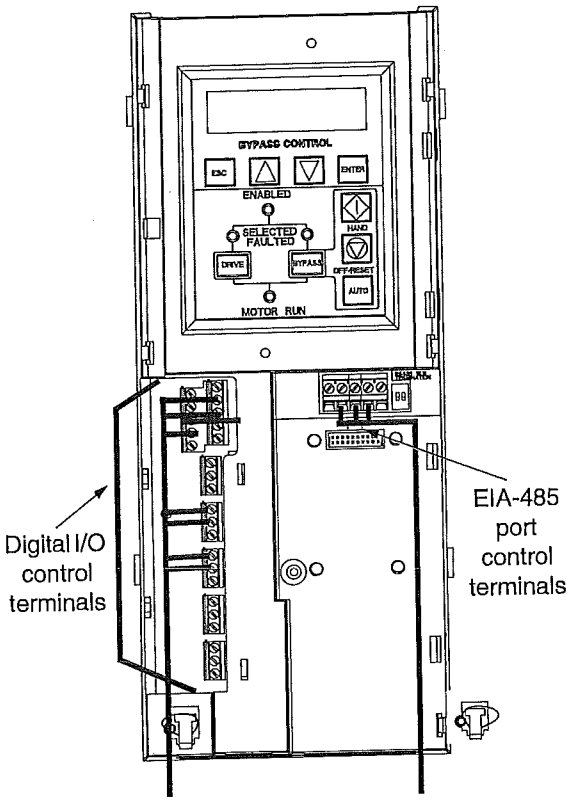

Basic connections

The figure on page *52* shows the basic control connections for use with the E-Clipse Bypass HVAC Default macro. These connections are described in the following paragraphs.

In typical installations, only analog input wires connect to the ACH550 terminal block, with other control connections made on the E-Clipse Bypass control board.

Use wire ties to permanently affix control/ communications wiring to the hooked wire race tie points provided, maintaining a minimum 6 mm (1/4") spacing from power wiring.

Drive's power connection terminals

The following tables list power and motor cable terminal sizes for connections to an input circuit breaker or disconnect switch, a motor terminal block and ground lugs. The tables also list torque that should be applied when tightening the terminals.

Vertical enclosure terminals

<table>
<tr><th rowspan="2">HP</th><th rowspan="2">Identification</th><th rowspan="2">Frame Size</th><th colspan="4">Maximum Wire Size Capacities of Power Terminals</th></tr>
<tr><th>Circuit Breaker</th><th>Disconnect Switch</th><th>Motor Termination</th><th>Ground Lugs</th></tr>
<tr><td colspan="7">208...240 Volt</td></tr>
<tr><td>1</td><td>ACH550-VxR-04A6-2</td><td>R1</td><td rowspan="5">#10
35 in-lbs</td><td rowspan="5">#10
7 in-lbs</td><td rowspan="6">#6
30 in-lbs</td><td rowspan="6">#4
35 in-lbs</td></tr>
<tr><td>1.5</td><td>ACH550-VxR-06A6-2</td><td>R1</td></tr>
<tr><td>2</td><td>ACH550-VxR-07A5-2</td><td>R1</td></tr>
<tr><td>3</td><td>ACH550-VxR-012A-2</td><td>R1</td></tr>
<tr><td>5</td><td>ACH550-VxR-017A-2</td><td>R1</td></tr>
<tr><td>7.5</td><td>ACH550-VxR-024A-2</td><td>R2</td><td>#8
40 in-lbs</td><td rowspan="2">#8
7 in-lbs</td></tr>
<tr><td>10</td><td>ACH550-VxR-031A-2</td><td>R2</td><td rowspan="3">#2
50 in-lbs</td><td>#2
50 in-lbs</td><td rowspan="4">#2
50 in-lbs</td></tr>
<tr><td>15</td><td>ACH550-VxR-046A-2</td><td>R3</td><td>#4
18 in-lbs</td><td rowspan="3">#2/0
120 in-lbs</td></tr>
<tr><td>20</td><td>ACH550-VxR-059A-2</td><td>R3</td></tr>
<tr><td>25</td><td>ACH550-VxR-075A-2</td><td>R4</td><td>#1
50 in-lbs</td><td>#1
55 in-lbs</td></tr>
<tr><td colspan="7">380...480 Volt</td></tr>
<tr><td>1/1.5</td><td>ACH550-VxR-03A3-4</td><td>R1</td><td rowspan="5">#10
35 in-lbs</td><td rowspan="5">#10
7 in-lbs</td><td rowspan="6">#6
30 in-lbs</td><td rowspan="6">#4
35 in-lbs</td></tr>
<tr><td>2</td><td>ACH550-VxR-04A1-4</td><td>R1</td></tr>
<tr><td>3</td><td>ACH550-VxR-06A9-4</td><td>R1</td></tr>
<tr><td>5</td><td>ACH550-VxR-08A8-4</td><td>R1</td></tr>
<tr><td>7.5</td><td>ACH550-VxR-012A-4</td><td>R1</td></tr>
<tr><td>10</td><td>ACH550-VxR-015A-4</td><td>R2</td><td rowspan="2">#8
40 in-lbs</td><td rowspan="2">#8
7 in-lbs</td></tr>
<tr><td>15</td><td>ACH550-VxR-023A-4</td><td>R2</td></tr>
<tr><td>20</td><td>ACH550-VxR-031A-4</td><td>R3</td><td rowspan="3">#3
50 in-lbs</td><td rowspan="2">#2
50 in-lbs</td><td rowspan="5">#2
50 in-lbs</td></tr>
<tr><td>25</td><td>ACH550-VxR-038A-4</td><td>R3</td><td rowspan="2">#4
18 in-lbs</td></tr>
<tr><td>30</td><td>ACH550-VxR-045A-4</td><td>R3</td></tr>
<tr><td>40</td><td>ACH550-VxR-059A-4</td><td>R4</td><td rowspan="3">#1
50 in-lbs</td><td rowspan="3">#2/0
120 in-lbs</td></tr>
<tr><td>50</td><td>ACH550-VxR-072A-4</td><td>R4</td><td>#1
55 in-lbs</td></tr>
<tr><td>60</td><td>ACH550-VxR-078A-4</td><td>R4</td><td>#1
70 in-lbs</td></tr>
</table>

HP	Identification	Frame Size	Maximum Wire Size Capacities of Power Terminals			
			Circuit Breaker	Disconnect Switch	Motor Termination	Ground Lugs
500...600 Volt						
2	ACH550-VxR-02A7-6	R2	#8 62 in-lbs	#8 7 in-lbs	#6 30 in-lbs	#4 35 in-lbs
3	ACH550-VxR-03A9-6	R2				
5	ACH550-VxR-06A1-6	R2				
7.5	ACH550-VxR-09A0-6	R2				
10	ACH550-VxR-011A-6	R2				
15	ACH550-VxR-017A-6	R2				
20	ACH550-VxR-022A-6	R3	#4 62 in-lbs		#2 50 in-lbs	#2 50 in-lbs
25	ACH550-VxR-027A-6	R3				
30	ACH550-VxR-032A-6	R4	#1 62 in-lbs	#4 18 in-lbs	#2/0 120 in-lbs	
40	ACH550-VxR-041A-6	R4				
50	ACH550-VxR-052A-6	R4		#1 55 in-lbs		
60	ACH550-VxR-062A-6	R4		#1 70 in-lbs		

Standard enclosure terminals

HP	Identification	Frame Size	Maximum Wire Size Capacities of Power Terminals			
			Circuit Breaker	Disconnect Switch	Motor Termination	Ground Lugs
208...240 Volt						
1	ACH550-BxR-04A6-2	R1	#8 40 in-lbs	#8 7 in-lbs	#6 30 in-lbs	#4 35 in-lbs
1.5	ACH550-BxR-06A6-2	R1				
2	ACH550-BxR-07A5-2	R1				
3	ACH550-BxR-012A-2	R1				
5	ACH550-BxR-017A-2	R1				
7.5	ACH550-BxR-024A-2	R2				
10	ACH550-BxR-031A-2	R2/R3	#1 50 in-lbs		#2 50 in-lbs	#2 50 in-lbs
15	ACH550-BxR-046A-2	R3		#4 18 in-lbs	#2 120 in-lbs	
20	ACH550-BxR-059A-2	R3				
25	ACH550-BxR-075A-2	R4		#1 55 in-lbs		

HP	Identification	Frame Size	Maximum Wire Size Capacities of Power Terminals			
			Circuit Breaker	Disconnect Switch	Motor Termination	Ground Lugs
208...240 Volt, continued						
30	ACH550-BxR-088A-2	R4	350 MCM 274 in-lbs	#1/0 70 in-lbs	#1 53 in-lbs	3 x #3/0 250 in-lbs
40	ACH550-BxR-114A-2	R4		300 MCM 275 in-lbs	250 MCM 300 in-lbs	
50	ACH550-BxR-143A-2	R6				
60	ACH550-BxR-178A-2	R6			400 MCM 375 in-lbs	
75	ACH550-BxR-221A-2	R6	2 x 250 MCM 274 in-lbs	2 x 250 MCM 274 in-lbs	2 x 500 MCM 375 in-lbs	
100	ACH550-BxR-248A-2	R6				
380...480 Volt						
1/1.5	ACH550-BxR-03A3-4	R1	#8 40 in-lbs	#8 7 in-lbs	#6 30 in-lbs	#4 35 in-lbs
2	ACH550-BxR-04A1-4	R1				
3	ACH550-BxR-06A9-4	R1				
5	ACH550-BxR-08A8-4	R1				
7.5	ACH550-BxR-012A-4	R1				
10	ACH550-BxR-015A-4	R2				
15	ACH550-BxR-023A-4	R2				
20	ACH550-BxR-031A-4	R3	#1 50 in-lbs	#4 18 in-lbs	#2 50 in-lbs	#2 50 in-lbs
25	ACH550-BxR-038A-4	R3				
30	ACH550-BxR-045A-4	R3				
40	ACH550-BxR-059A-4	R4			#2/0 120 in-lbs	
50	ACH550-BxR-072A-4	R4		#1 55 in-lbs		
60	ACH550-BxR-078A-4	R4		#1 70 in-lbs		
75	ACH550-BxR-097A-4	R4	350 MCM 274 in-lbs	#1/0 70 in-lbs	#1 53 in-lbs	3 x #3/0 250 in-lbs
100	ACH550-BxR-125A-4	R5		300 MCM 275 in-lbs	250 MCM 300 in-lbs	
125	ACH550-BxR-157A-4	R6				
150	ACH550-BxR-180A-4	R6			400 MCM 375 in-lbs	
200	ACH550-BxR-246A-4	R6	2 x 250 MCM 274 in-lbs	2 x 250 MCM 274 in-lbs	2 x 500 MCM 375 in-lbs	
250	ACH550-BxR-316A-4	R8	2 x 500 MCM 274 in-lbs	2 x 500 MCM 275 in-lbs	2 x 600 MCM 500 in-lbs	5 Bus bar holes (13/32" bolts)
300	ACH550-BxR-368A-4	R8				
350	ACH550-BxR-414A-4	R8				
400	ACH550-BxR-486A-4	R8				

HP	Identification	Frame Size	Maximum Wire Size Capacities of Power Terminals			
			Circuit Breaker	Disconnect Switch	Motor Termination	Ground Lugs
500...600 Volt						
2	ACH550-BxR-02A7-6	R2	#8 62 in-lbs	#8 7 in-lbs	#6 30 in-lbs	#4 35 in-lbs
3	ACH550-BxR-03A9-6	R2				
5	ACH550-BxR-06A1-6	R2				
7.5	ACH550-BxR-09A0-6	R2				
10	ACH550-BxR-011A-6	R2				
15	ACH550-BxR-017A-6	R2				
20	ACH550-BxR-022A-6	R3	#1 62 in-lbs		#2 50 in-lbs	#2 50 in-lbs
25	ACH550-BxR-027A-6	R3				
30	ACH550-BxR-032A-6	R4		#4 18 in-lbs	#2 120 in-lbs	
40	ACH550-BxR-041A-6	R4				
50	ACH550-BxR-052A-6	R4		#1 55 in-lbs		
60	ACH550-BxR-062A-6	R4		#1 75 in-lbs		
75	ACH550-BxR-077A-6	R6	300 MCM 274 in-lbs	#1/0 70 in-lbs	#1 53 in-lbs	3 x #3/0 250 in-lbs
100	ACH550-BxR-099A-6	R6				
125	ACH550-BxR-125A-6	R6		300 MCM 275 in-lbs	250 MCM 300 in-lbs	
150	ACH550-Bx-R144A-6	R6				

Basic control connections for E-Clipse HVAC Default

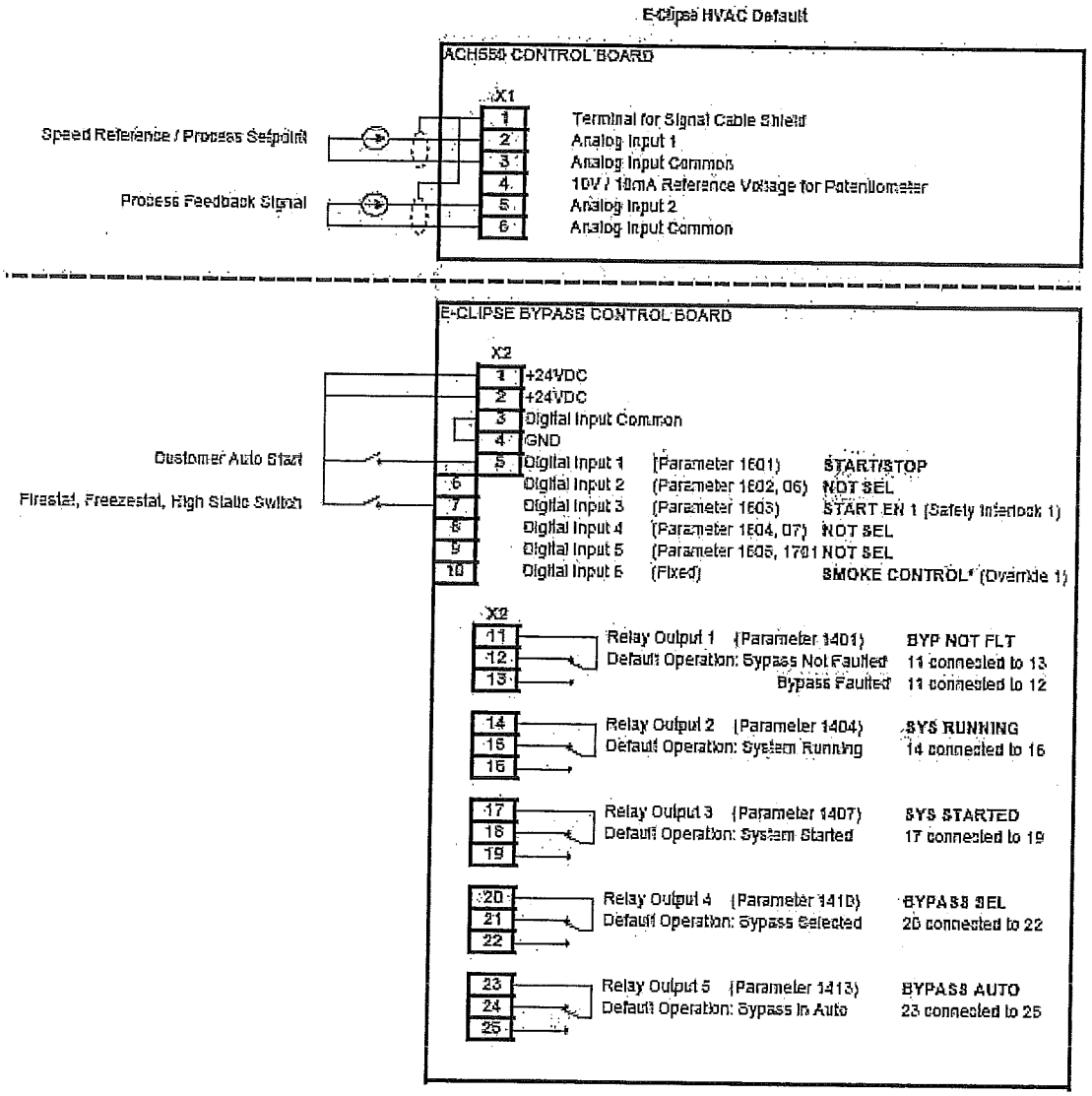

Parameters Changed Relative to E-Clipse HVAC Default

Parameter Number	Description	Setting

* Smoke Control (Override1) is a fixed input. Closing Digital Input 6 **will** place the E-Clipse Bypass in Smoke Control mode which may reassign the function of the other Digital Inputs. Refer to the Smoke Control (Override1) documentation.

2. Check installation – bypass

Control panel settings and checks

Apply power to the E-Clipse Bypass unit. The ACH550 Control Panel should show the operating status of the drive. If the E-Clipse Bypass Control Panel displays a PHASE SEQ (Phase Sequence) fault, remove power, wait at least 5 minutes and then swap any two input phase wires. If the motor is a standard 208 V, 60 Hz motor connected to a 208 V drive or a 460 V, 60 Hz motor connected to a 480 V drive, the default parameter settings should be suitable for the initial tests described below. If the motor's rating is not 208 V or 460 V, 60 Hz, the MOTOR NOM VOLT and MOTOR NOM FREQ parameters will need to be properly set before proceeding. Refer to the *ACH550-UH User's Manual* and set the parameters as required.

Note: The settings for ALL external serial communication between the ACH550 with E-Clipse Bypass and any Building Automation System are configured using the E-Clipse Bypass operator panel. DO NOT attempt to configure the external serial communication connection using the ACH550 operator panel!

The settings for internal communication between the ACH550 and the E-Clipse Bypass are configured at the factory and require no adjustment.

Drive Link recovery procedure

If the ACH550 Drive communication settings are unintentionally changed during setup a "Drive Link Fault", "Drive Link Error" or "Drive Setup" alarm may be displayed. Should this occur, accomplish the following steps in order.

Using the ACH550 Drive Keypad

1. Set Parameter 9802 to "STD MODBUS"
2. Set Parameter 9902 to "E-CLIPSE"
3. Cycle Power

Following the above steps, in order, should restore proper communications between the ACH550 Drive and the E-Clipse Bypass. Should the E-Clipse Keypad continue to display a "Drive Link Fault", "Drive Link Error" or "Drive Setup" alarm, check the following parameter settings to ensure they have been recovered. If necessary, individually set the correct parameter settings as indicated below and cycle power.

The only ACH550 Drive macro that provides the proper configuration settings by default is the E-Clipse Bypass macro. If any other ACH550 Drive macro is used, that macro should be selected after completing the initial tests. When using any other macro the following ACH550 Drive parameter values must be set and power cycled or the E-Clipse Bypass will not function properly:

- Parameter 9802 must be set to "STD MODBUS"
- Parameter 1001 must be set to "Comm"
- Parameter 1002 must be set to "Comm"
- Parameter 1601 must be set to "Comm"

- Parameter 1608 must be set to "Comm"
- Parameter 5303 must be set to "76.8 kb/s"
- Parameter 5304 must be set to "8 EVEN 1"
- Parameter 5305 must be set to "DCU PROFILE"
- Parameter 5310 must be set to "103"
- Parameter 5311 must be set to "104"
- Power must be cycled

Refer to the *ACH550-UH User's Manual* for additional information.

Note: Run motor from drive before attempting bypass operation.

System check: motor connected to ACH550 with E-Clipse Bypass

After performing the control panel checks and setting the ACH550 Drive Start-up Data parameters, check the operation of the ACH550 Drive with E-Clipse Bypass with the motor connected as follows:

1. Disconnect and lock out power to the E-Clipse Bypass unit, wait at least five minutes before disconnecting power.
2. Connect the motor to the output terminals.

CAUTION: If the Bypass Override (Override 2) input contact is closed, the motor will start across the line as soon as power is applied.

If the Safety Interlock and Run Enable input contacts are closed and the Smoke Control (Override 1) input contact is closed, the motor will start across the line as soon as power is applied.

If the Start/Stop, Safety Interlock and Run Enable input contacts are closed and the system is in the Bypass mode and in either Hand or Auto, the motor will start across the line as soon as power is applied.

If the Start/Stop, Safety Interlock and Run Enable input contacts are closed and the system is in the Drive mode with the drive in either Hand or Auto mode, the motor will start on the drive as soon as power is applied.

In order to prevent the motor from starting, the system should be in the Drive mode and the drive should be OFF when the power is disconnected at the end of the previous series of control panel settings and checks.

In order to prevent the motor from running without disconnecting the motor, open the Run Enable and Safety Interlock contacts on bypass control board terminals X2:2, X2:3 and X2:4 before applying power. Set the bypass to Drive mode and the drive to OFF.

---

3. Apply power to the E-Clipse Bypass unit. The ACH550 Control Panel display should be illuminated. On the bypass control panel, both the display and Enabled LED should be illuminated. If the Enabled LED is not illuminated solid green, check to see that closed contacts or jumpers connect terminal X2:3 to X2:4 and X2:2 to X2:7 on the bypass control board.
4. The Drive Selected LED should be illuminated. If not, press the Drive Select key to switch to Drive mode. Leave the system in the Drive mode when proceeding to the next step.
5. Press the Hand key on the ACH550 Control Panel. Press and hold the UP key until the motor just starts rotating.

Note: If the ACH550 Control Panel displays an OVERCURRENT or EARTH FAULT, disconnect and lock out power to the E-Clipse Bypass unit. Wait at least 5 minutes. Disconnect the motor leads from the E-Clipse Bypass unit and Megger each motor lead to ground to determine if the motor is good. Check the power leads from the Drive / Bypass to the motor for damaged or improper wiring. If the ACH550 Control Panel displays any other drive faults, correct the fault condition before proceeding to the next step.

CAUTION: Check motor rotation direction as soon as the motor begins to move. If motor does not rotate in the correct direction, shut down the drive, disconnect and lock out power to the drive and wait five minutes. Swap any two motor output wires (T1, T2, and T3). Incorrect motor rotation direction may cause equipment damage.

---

6. Increase the speed to 60 Hz or the highest safe operating speed.
7. Press the OFF key on the drive control panel. The motor should stop.

If the drive does not operate according to these steps, refer to the ACH550-UH User's Manual.

If the drive operates according to these steps, your ACH550 with E-Clipse Bypass is ready to use with preset or modified macro settings.

Note: The settings for ALL external serial communication between the ACH550 with E-Clipse Bypass and any Building Automation System are configured using the E-Clipse Bypass operator panel. DO NOT attempt to configure the external serial communication connection using the ACH550 operator panel!

The settings for internal communication between the ACH550 and the E-Clipse Bypass are configured at the factory and require no adjustment.

Note: Both the ACH550 Drive and the E-Clipse Bypass include preset application macros. The only ACH550 Drive macro that provides the proper configuration settings by default is the *E-Clipse HVAC Default macro* (9902 = 15). If any other ACH550 drive macro or any modified setting of the *E-Clipse HVAC Default macro* is used the following ACH550 Drive parameter values must be set and power cycled or the E-Clipse Bypass will not function properly:

- Parameter 9802 must be set to "STD MODBUS"
- Parameter 1001 must be set to "Comm"
- Parameter 1002 must be set to "Comm"
- Parameter 1601 must be set to "Comm"
- Parameter 1608 must be set to "Comm"
- Parameter 5303 must be set to "76.8 kb/s"
- Parameter 5304 must be set to "8 EVEN 1"
- Parameter 5305 must be set to "DCU PROFILE"
- Parameter 5310 must be set to "103"
- Parameter 5311 must be set to "104"
- Power must be cycled

Refer to the *ACH550-UH User's Manual* for programming instructions.

Note: Run motor from drive before attempting bypass operation.

System check: motor disconnected from the ACH550 with E-Clipse Bypass

If you are familiar with the E-Clipse Bypass operation, you may skip the following section. Otherwise, after performing the system checks and setting the ACH550 Drive Start-up Data parameters, become familiar with the operation of the ACH550 Drive with E-Clipse Bypass without the motor connected as follows:

1. Disconnect and lock out power to the E-Clipse Bypass unit, wait at least five minutes after disconnecting power.
2. Disconnect the motor from the E-Clipse Bypass unit.
3. Apply power to the E-Clipse Bypass unit by turning on the branch circuit disconnect device and the bypass disconnect switch or circuit breaker.
4. The ACH550 Control Panel display should be illuminated. On the E-Clipse Bypass control panel, both the display and *Enabled* LED should be illuminated. If the *Enabled* LED is not illuminated solid green, check to see that closed contacts or jumpers connect terminal X2:3 to X2:4 and X2:2 to X2:7 on the bypass control board.

5. On the E-Clipse Bypass control panel, either the *Drive Selected* or *Bypass Selected* LED should be illuminated. Pressing the *Drive Select* or *Bypass Select* key should switch the bypass back and forth between the *Drive* mode and the *Bypass* mode as indicated by the LEDs above each button. Check that the bypass control panel switches the system between modes. Leave the system in the Bypass mode when proceeding to the next step.
6. Check to see that pressing the:
   - *Auto* key on the bypass control panel causes the bottom line on the E-Clipse Bypass display to indicate "*Bypass in Auto*"
   - Hand key on the bypass control panel generates a Motor Phase Fault.
   - Under normal conditions (motor connected) pressing the Hand key on the bypass control panel causes the bottom line on the E-Clipse Bypass display to indicate "Hand #A Run"
   - OFF key on the bypass control panel causes the bottom line on the E-Clipse Bypass display to indicate "Off Stop"
7. For Steps 8 through 14, ACH550 Drive Parameter 9904 must be set to "Scalar: Freq". After successful completion of Step 13, Parameter 9904 may be set to "Vector: Speed" if very specific application requirements make it necessary to use this type of motor control. Operation using the "Vector: Speed" setting is unnecessary for control of almost all fan and pump applications. Refer to the *ACH550-UH User's Manual* for details on setting parameters.
8. Press the *Drive Select* key on the E-Clipse Bypass control panel. The *Drive Select* LED should be illuminated.
9. Check to see that pressing the:
   - *Auto* key on the bypass control panel causes the E-Clipse Bypass display to indicate "*Bypass in Auto*"
   - *Hand* key on the bypass control panel causes no change to the E-Clipse Bypass display
   - *OFF* key on the bypass control panel causes the E-Clipse Bypass display to indicate "*Bypass in Off*"
10. Press the *HAND* key on the drive control panel. Note that the top line of the control panel display indicates "HAND" and run as a clockwise rotating arrow. The *Drive Run* LED on the E-Clipse Bypass control panel should be illuminated.
11. Press the *UP* arrow on the drive control panel. Note that the speed reference indication in the top line of the drive control panel display increases from "0.0% SP."
12. In the middle line of the drive control panel display, the output current indication should indicate "0.0 A."
13. Press the *DOWN* arrow on the drive control panel until the speed and frequency indications return to "0.0."
14. Press the *OFF* key on the drive control panel. Note that the bottom line of the drive contol panel display indicates "Off."

If the ACH550 Drive and E-Clipse Bypass operate according to these steps, and you have familiarized yourself with their operation, disconnect and lock out power to prepare for the next test.

WARNING! Wait at least five minutes after disconnecting power from the drive before you attempt to service the drive. Bus capacitors in the intermediate DC circuit must discharge before servicing the drive. Using a meter rated for 1000 VDC, check for zero volts at:

- Terminals BRK+ to GND and BRK- to GND (frame size R1/R2)
- Terminals UC+ and UC- (frame size R3...R8).

If the drive does not operate according to these steps, refer to the ACH550-UH User's Manual.

3. Check jumpers and switches

The settings described in this section are factory set and, for most situations, do not require adjustment. However, it is a good practice to review these settings to confirm that they are appropriate for the configuration installed.

Jumper and switch locations

The figure below shows the locations of the SW1 DIP switch on the E-Clipse Bypass control board. The function and setting of this switch is explained in the following paragraph.

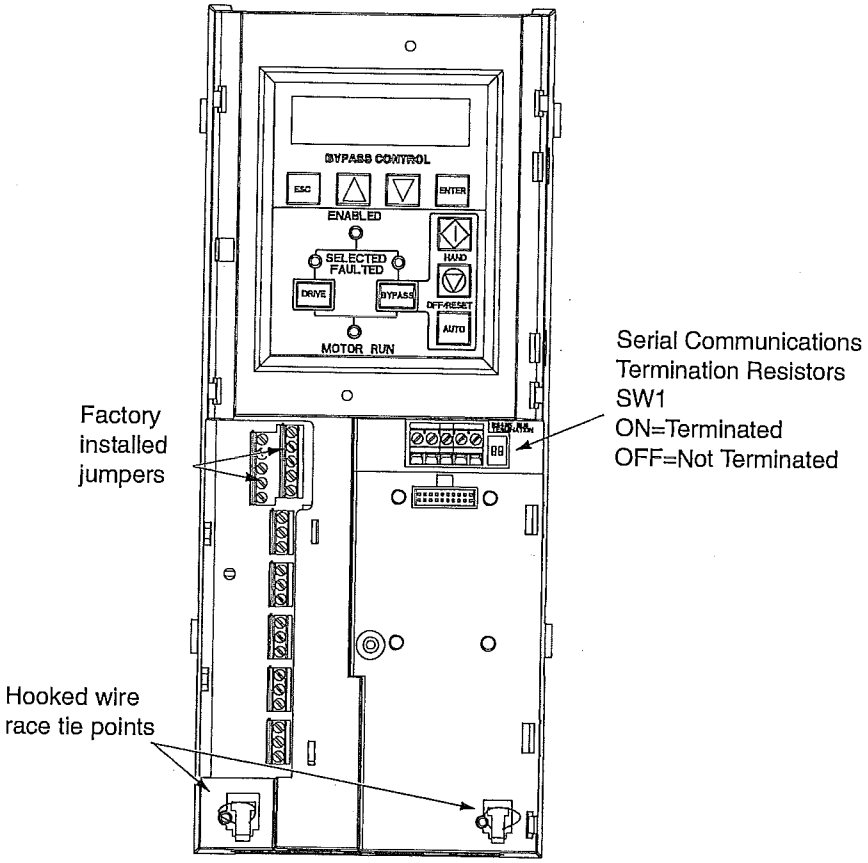

DIP switch settings

The DIP switch is used to configure the serial communications termination resistors.

To reduce noise on the serial communications network, terminate the EIA-485 network using 120 ohm resistors at both ends of the network. Use the DIP switches to connect or disconnect the on-board termination resistors. Both switches must be positioned in the ON or OFF position to correctly configure the termination resistors.

Note: When using embedded protocols, set SW1 in the OFF position.

Circuit breaker settings

On some ACH550 E-Clipse Bypasses, the circuit breaker has adjustable settings for instantaneous current protection. The factory default settings are practical for most applications. Refer to the "ABB SACE Instruction Sheet" (supplied with these units) for additional information on the adjustment of these settings.

Operation

E-Clipse bypass configurations

The ACH550 with E-Clipse Bypass is an ACH550 AC adjustable frequency drive in an integrated UL type 1, UL type 12 or UL type 3R package with a bypass motor starter. The ACH550 with E-Clipse Bypass provides:

- Disconnect switch or circuit breaker with door mounted control lever. The lever can be padlocked in the OFF position (padlock not supplied).
- Bypass starter.
- Motor overload protection.
- Local operator panel with indicating lights and multifunction display.
- Provisions for external control connections.
- Embedded communications for major BMS protocols including BACnet, Johnson Controls International N2, Siemens Building Technologies FLN, and Modbus
- Optional fieldbus adapters for connection to additional BMS protocols including LonWorks and Ethernet
- Optional drive service switch (drive input disconnect), the functional equivalent of a three-contactor bypass arrangement.

The following shows the front view of the ACH550 E-Clipse Bypass vertical configuration, and identifies the major components.

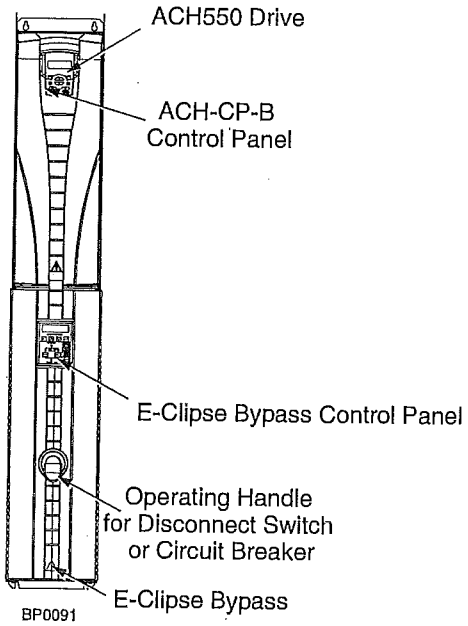

The following shows the front view of the ACH550 E-Clipse Bypass standard configurations, and identifies the major components.

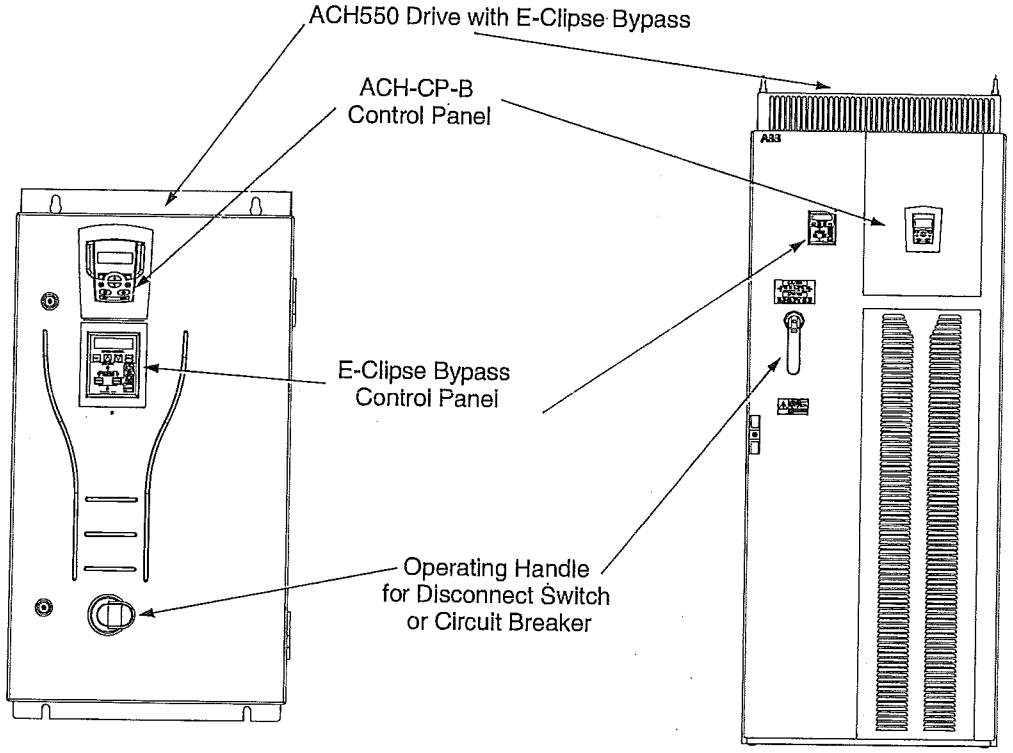

The following is a typical power diagram.

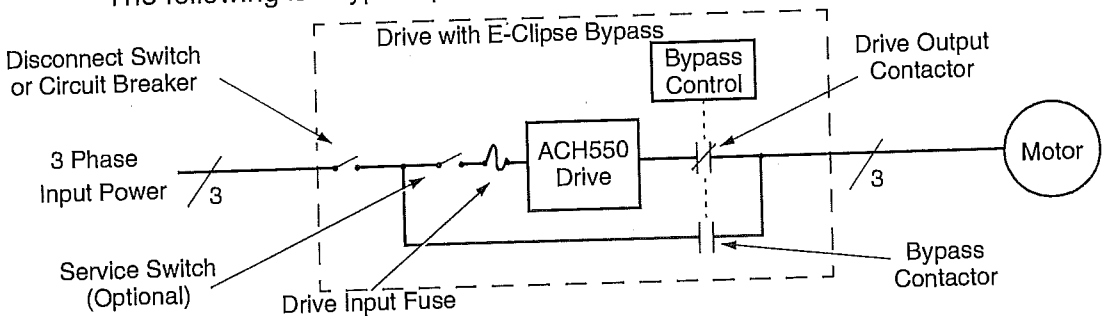

Bypass control

The bypass control panel features:

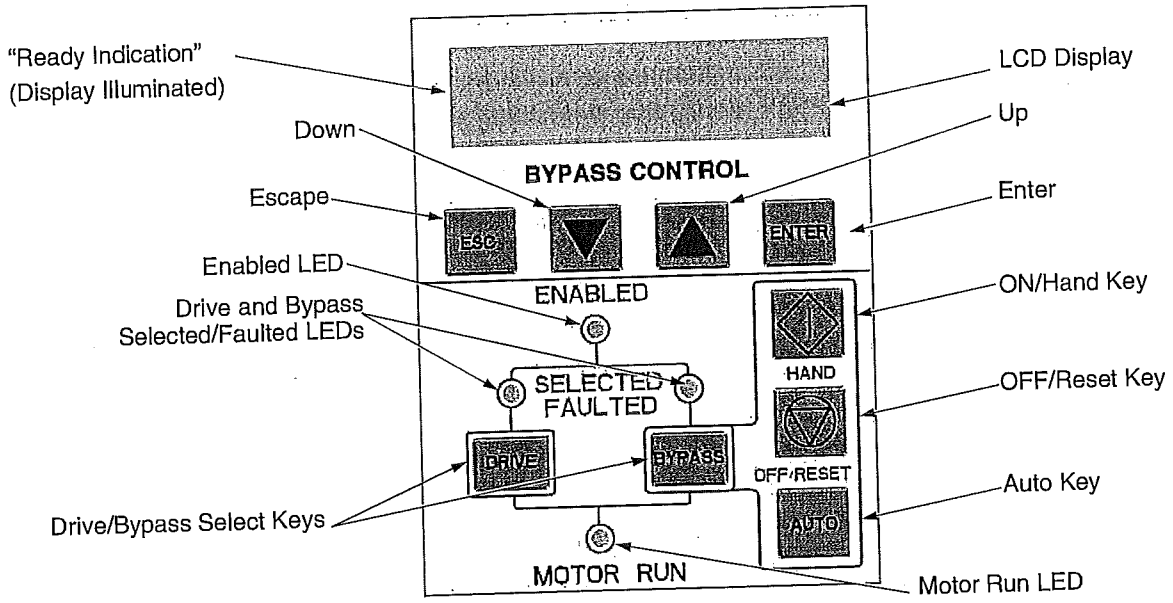

Ready (Power On) Indication

The *Ready (Power On) indication* is provided by the bypass control panel. The bypass control panel display will be illuminated and text will be displayed when the disconnect switch or circuit breaker is closed and control power is applied to the bypass.

Enabled LED

The *Enabled LED* is illuminated green under the following conditions:

- Both the Safety Interlock(s) and Run Enable contacts are closed.
- The Safety Interlock contact(s) are closed with no Start command present.

The Enabled LED flashes green if the Run Enable contact is open and when the Safety Interlock contact(s) are closed and a Start command is present.

The Enabled LED is illuminated red when the Safety Interlock contact(s) are open.

Motor Run LED

The *Motor Run LED* is illuminated green when the motor is running in either bypass mode or in drive mode. The Motor Run LED flashes green to indicate the system has been placed in an Override condition.

Bypass Faulted LED

The *Bypass Faulted LED* is illuminated or flashes red when the motor or bypass protection functions have shut down the bypass. The specific nature of the fault is indicated on the bypass control display. Refer to the *Diagnostics* section of this manual for more details.

Drive Selected LED

The *Drive Selected LED* is illuminated green when the drive has been selected as the power source for the motor and no drive fault is present.

Bypass Selected LED

The *Bypass Selected LED* is illuminated or flashes green when the bypass has been selected as the power source for the motor and no bypass fault is present.

Drive Faulted LED

The *Drive Faulted LED* is illuminated red when the bypass has lost its communications link with the drive or when the motor or drive protection functions have shut down the drive. The specific nature of the fault is indicated on the drive control panel display. Refer to the *Diagnostics* section on page *65* of the ACH550-UH User's Manual for more details.

Automatic Transfer

The *Automatic Transfer* indication is provided on the bypass control panel. The bypass control display will continuously flash an alarm to indicate the system has automatically transferred to Bypass after a Drive fault. The Bypass Selected LED flashes green when the system has automatically transferred to bypass operation. The bypass event log will also record this event.

Auto Indication

The *Auto Indication* is provided on the bypass control panel default display when the bypass control panel Auto key is pressed. Normally this indicates that the Auto Start contact or serial communications has been selected as the means for starting and stopping the motor in the bypass mode.

Off Indication

The *Off Indication* is provided on the bypass control panel default display when bypass control panel Off key is pressed.

Hand Indication

The *Hand Indication* is provided on the bypass control panel default display when the motor has been started manually in the bypass mode.

Drive Select Key

The *Drive Select Key* selects the drive as the power source for the motor.

Bypass Select Key

The *Bypass Select Key* selects the bypass as the power source for the motor.

Off/Reset Key

The *Off/Reset Key* may be used to manually stop the motor if the motor has been running on bypass power. The Off/Reset key also resets most bypass faults. It may take several minutes before the bypass can be reset after an overload trip. If a bypass fault condition is present the second press of this key places the bypass in the OFF mode.

Auto Key

The *Auto Key* selects the Auto Start contact or serial communications as the means for starting and stopping the motor in the bypass mode.

Hand Key

The *Hand Key* can be used to manually start the motor when the bypass has been selected as the power source for the motor.

Bypass control panel modes

The HVAC Bypass Control Panel has several different modes for configuring, operating and diagnosing the bypass. Select MENU and use the UP/DOWN buttons to select modes. The modes are:

- Default Display mode – Provides (HAND/OFF/AUTO) indication of the bypass operating control mode.
- Bypass Status mode – Provides status indications of the current system operating conditions.
- Start-Up Parameter Mode – Provides a list of parameters or operating conditions that may be configured or viewed during startup.
- Parameter List mode – Used to edit parameter values individually.
- Changed Parameter mode – Displays changed parameters.
- Bypass Fault Display mode – If there is an active bypass fault, the control panel will flash the fault number and fault diagnostic indication in English.
- Bypass Alarm Display mode – If there is an active bypass alarm, the control panel will flash the alarm number and alarm diagnostic indication in English.

Start-up by changing the parameters from the start-up list

To change the parameters, follow these steps:

1	The **Default Display** indicates the **Bypass Control** mode.		DRIVE SELECTED BYPASS IN OFF
2	Press **ENTER** to enter the **Main Menu.**	ENTER	*BYPASS STATUS STARTUP PARAMS

3	Select the **Startup Params** with the **Up/Down** arrows and press **ENTER**.	▼ ▲ ENTER	BYPASS STATUS *STARTUP PARAMS
4	Select the appropriate **Parameter** with the **Up/Down** arrows and press **ENTER**.	▼ ▲ ENTER	*1601 START/STOP 1602 RUN ENABLE
5	Press the **Up/Down** arrows to change the **Parameter Value**.	▼ ▲	1601 START/STOP [1 DI1]
6	Press **ENTER** to store the modified value or press **ESC** to leave the **Parameter Edit** mode.	ENTER or ESC	*1601 START/STOP 1602 RUN ENABLE
7	Press **ESC** to return to the **Main Menu**, and again to return to the **Default Display**.	ESC	DRIVE SELECTED BYPASS IN OFF

Start-up by changing the parameters individually from the parameter list

To change the parameters, follow these steps:

1	The **Default Display** indicates the **Bypass Control** mode.		DRIVE SELECTED BYPASS IN OFF
2	Press **ENTER** to enter the **Main Menu.**	ENTER	*BYPASS STATUS STARTUP PARAMS
3	Select the **Parameter List** with the **Up/Down** arrows and press **ENTER**.	▼ ▲ ENTER	STARTUP PARAMS *PARAMETER LIST
4	Select the appropriate **Parameter Group** with the **Up/Down** arrows and press **ENTER**.	▼ ▲ ENTER	14 RELAY OUT *16 SYSTEM CTRL
5	Select the appropriate **Parameter** in a group with the **Up/Down** arrows and press **ENTER**.	▼ ▲ ENTER	*1601 START/STOP 1602 RUN ENABLE
6	Press the **Up/Down** arrows to change the **Parameter Value**.	▼ ▲	1601 START/STOP [1 DI1]
7	Press **ENTER** to store the modified value **or** press **ESC** to leave the **Parameter Edit** mode.	ENTER or ESC	*1601 START/STOP 1602 RUN ENABLE
8	Press **ESC** to return to the listing of **Parameter Groups**, and again to return to the **Main Menu**.	ESC ESC	*16 SYSTEM CTRL 17 OVERRIDE

9	Press **ESC** to return to the **Default Display** from the **Main Menu.**	ESC	DRIVE SELECTED BYPASS IN OFF

Note: In the Parameter Edit mode the current parameter value appears below the parameter name.

Note: To view the default parameter value, press the **Up/Down** arrows simultaneously. Press **Enter** to restore the default parameter value or press **ESC** to leave the **Parameter Edit** mode.

Diagnostics

Fault listing

Fault Code	Fault Name In Panel	Fault	Possible Cause	Corrective Action
3001	COIL CURR FBK	RBCU is sensing abnormal current feedback when neither contactor should be energized	Defective component on RBCU	Change RBCU
3002	BYP CNTACT STUCK	M2 contactor indicates it is not prepared to move on a power up check of the contactor or after contact is commanded to open	Defective Contactor Defective RBCU	Disconnect incoming power from unit Check if contactor armature moves freely. If armature moves freely, then change the RBCU. If armature does not move freely, then change individual contactor (M2) or the complete assembly (RCSA-0x)
3003	DRV CNTACT STUCK	M1 contactor indicates it is not prepared to move on a power up check of the contactor or after contact is commanded to open	Defective Contactor Defective RBCU	Disconnect incoming power from unit Check if contactor armature moves freely. If armature moves freely, then change the RBCU. If armature does not move freely, then change individual contactor (M1) or the complete assembly (RCSA-0x)

Fault Code	Fault Name In Panel	Fault	Possible Cause	Corrective Action
3004	BYPASS COIL OPEN	M2 contactor will not close when commanded to do so	Loose J8 connector on RBCU Loose wires on contactor terminals A1 and/or A2 Bad Output on RBCU Bad Contactor	Verify that J8 connector is firmly seated. With incoming power disconnected, check for tightness of A1 and A2 terminals Swap RBCU Change Contactor/ Assembly
3005	DRIVE COIL OPEN	M1 contactor will not close when commanded to do so	Loose J8 connector on RBCU Loose wires on contactor terminals A1 and/or A2 Bad Output on RBCU Bad Contactor	Verify that J8 connector is firmly seated. With incoming power disconnected, check for tightness of A1 and A2 terminals Swap RBCU Change Contactor/ Assembly
3006	UNDERVOLTAGE	Message only occurs if drive is controlling the motor and the power to the bypass is removed before the drive phases back. Message will appear in the fault log. This message will only appear when drive contactor opens when drive is operating	Loose J7 connector on RBCU unit Loose input wiring Incoming power problems	Check that J7 connector is firmly seated in RBCU Check tightness of incoming connections Check Parameter 0413 to view voltage level at time of trip Check upstream protection
3008	DRIVE AI2 LOSS	Only displayed when in Supervisory mode. Indicates that AI2 on the drive has failed.	Check ACH550 manual for AI2 loss	Check ACH550 manual for AI2 loss
3009	MTR OVERLOAD	Bypass opens on motor overload conditions defined in the drive	Drive Mode: Bad Motor Bad CT's Bad RBCU Bypass mode: Bad motor Bad CT's Bad RBCU Either mode: low input voltage	Check if overload condition exists Drive Mode: Refer to 550 manual for proper troubleshooting techniques Bypass Mode: Check that J2 connector is firmly seated in RBCU Use clamp meter to verify mtr current vs. display in parameter 0101 Check input voltage

Fault Code	Fault Name In Panel	Fault	Possible Cause	Corrective Action
3010	INP PHASE A LOSS	Fault will be generated only when trying to close the bypass contactor and the RBCU does not sense voltage on Phase A	Loose J7 connector Loose wiring on Contactor assembly. Blown upstream fuse	Check J7 connector Check yellow wire on input block Check incoming voltage, phase to ground
3011	INP PHASE B LOSS	Fault will be generated only when trying to close the bypass contactor and the RBCU does not sense voltage on Phase B	Loose J7 connector Loose wiring on Contactor assembly. Blown upstream fuse	Check J7 connector Check black wire on input block Check incoming voltage, phase to ground
3012	INP PHASE C LOSS	Fault will be generated only when trying to close the bypass contactor and the RBCU does not senses voltage on Phase C	Loose J7 connector Loose wiring on Contactor assembly. Blown upstream fuse	Check J7 connector Check red on input block Check incoming voltage, phase to ground
3013	DRIVE 1ST START	Fault generated if attempting to close the bypass contactor with out running the bypass in drive mode first.	NA	Run bypass unit in drive mode before attempting bypass mode
3014	COIL POW SUPPLY	Coil power supply has failed to reach rated voltage	Internal failure on RBCU unit Shorted contactor coil	Cycle power on bypass unit. If contactor coil is shorted, fault 3023 or 3024 will be generated. If 3023 or 3024 is generated, replace respective contactor If 3023 or 3024 is not generated on power up, replace RBCU unit.
3016	EARTH FAULT	Declared if attempting to close the bypass contactor when the drive has earth fault declared	Earth fault in motor	Refer to the fault code 16 on page *25*.

Fault Code	Fault Name In Panel	Fault	Possible Cause	Corrective Action
3017	MTR UNDERLOAD	If motor power(%) level falls below minimum power level establish in parameter 3003 for the time (s) set in parameter 3002 fault will be generated. Parameter 3003 is a percentage of motor power as defined in the drive via parameter 9909. Fault only applies to bypass mode	Broken belt	Check load Reset bypass keypad Check fault code 17 on page *25*, for further action
3018	MAX CYCLE FAULT	Supervisory Mode only. Declared if bypass contactor is closed by supervisory control 16 times within a 1 hour period.	High and low levels of hysteresis band are too tight	Check parameters 3202-3205. Increase time delays on parameters 3204 and 3205
3019	DRIVE LINK FAULT	Supervisory Mode Only. Fault generated if RS-485 link between drive and bypass stops communicating.	Bad cable/connection between drive and bypass. Communication improperly set in drive Parameter 9802. Application Macro improperly set in drive parameter 9902.	Proper seating of cable in drive and RBCU(connector J3) Check drive parameter 9802 (Modbus) and 9902 (E-Clipse) Check drive Group 53 Follow DriveLink recovery procedure
3020	PHASE SEQ	Sequence of 3 phase voltage input is such that bypass operation will result in motor rotation opposite of drive forward operation.	Phase sequence unknown at time of wiring	Swap any two of the three input wires to the bypass unit
3021	PH A CURR FBK	Fault is generated when current in Phase A is detected and the bypass contactor is open	Loose CT connection Bad RBCU Bad CT	Check J2 connector for proper seating Check connector on Current Assembly Replace RBCU Replace RCSA unit
3022	PH C CURR FBK	Fault is generated when current in Phase C is detected and the bypass contactor is open	Loose CT connection Bad RBCU Bad CT	Check J2 connector for proper seating Check connector on Current Assembly Replace RBCU Replace RCSA unit

Fault Code	Fault Name In Panel	Fault	Possible Cause	Corrective Action
3023	BYP COIL SHORTED	Coil characteristics are checked only on power up and coil current is greater than allowable values	Shorted contactor coil Shorted/damaged cable Bad RBCU	Replace RBCU Replace RCSA unit
3024	DRV COIL SHORTED	Coil characteristics are checked only on power up and coil current is greater than allowable values	Shorted contactor coil Shorted/damaged cable Bad RBCU	Replace RBCU Replace RCSA unit
3027	INVALID SUB ASM	Contactor assembly as recorded in the RBCU unit does not match drive information communicated via 485 link	RBCU unit from a different size bypass used to replace a defective RBCU. Parameters not matched after Firmware change.	Contact ABB at 1-800-HELP-365 Option 4
3028	EXT COMM LOSS	Time between fieldbus messages has exceeded timeout interval set with parameter 3005	Incorrect Communication settings in Group 51 & 53. Poor Connections Noise on Communication Line	Check Group 51 & 53 Tighten Connections Check Communication Cable Grounding
3029	EFB CONFIG FILE	Error reading configuration file for embedded fieldbus	Internal Startup error	Cycle Power Replace RBCU
3030	FORCE TRIP	Fault trip forced by external fieldbus	Overriding Control System tripped E-Clipse unit via fieldbus.	Check Overriding Control System
3031 ... 3033	EFB 1...EFB 3	Fault code reserved for embedded fieldbus.	For Bacnet: Device object instances for the drive and or bypass are set greater than 4194302 in paramters 5011 5017 and or 5311 5317 respectively	Check Parameters 5011, 5017 and/or 5311, 5317
3034	MTR PHASE	Detects open motor phase. Detection is done by current transformers in bypass unit.	Internal problem Cable problem Motor problem	Check wiring in E-Clipse Unit Check motor cabling Check Motor Check if 3006 is Disabled
3037	PCB TEMP	RBCU unit has reached 190 degrees Fahrenheit, 88 degrees Celsius	Cabinet cooling has failed Ambient conditions too high Bad RBCU unit	Stop drive and let cool down and restart Add additional cooling Replace RBCU

Fault Code	Fault Name In Panel	Fault	Possible Cause	Corrective Action
3038	NO DRIVE DATA	No drive data available (Group 112)	Bypass not able to extract drive data on initial power up due to: Bad cable/connection between drive and bypass. Communication improperly set in drive Parameter 9802. Application Macro improperly set in drive parameter 9902.	Proper seating of cable in drive and RBCU (connector J3) Check drive parameter 9802 (Modbus) and 9902 (E-Clipse) Check drive Group 53 Follow DriveLink recovery procedure then cycle power to bypass.
3039	FBA PAR CONF	Non embedded fieldbus has detected an error in Group 51 parameters	Incorrect settings in Group 51	Verify Group 51 parameters
3101	SFLASH CORRUPT	Internal checksum error	NA	Cycle power Replace RBCU Upgrade firmware
3102	PMAP FILE	Parameter file is corrupt		Cycle Power Contact ABB with information that preceeded fault
3201	T1 OVERLOAD	T1 program cycle is overloaded	NA	Contact ABB with information that proceeded fault Cycle Power Replace RBCU
3202	T2 OVERLOAD	T2 program cycle is overloaded	NA	Contact ABB with information that proceeded fault Cycle Power Replace RBCU
3203	T3 OVERLOAD	T3 program cycle is overloaded	NA	Contact ABB with information that proceeded fault Cycle Power Replace RBCU
3204	STACK OVERFLOW	Program cycle is overloaded	NA	Contact ABB with information that proceeded fault Cycle Power Replace RBCU

Fault Code	Fault Name In Panel	Fault	Possible Cause	Corrective Action
3205	UNKNOWN CB	Bypass control board type is unknown.	Firmware is not compatible with control board in RBCU.	Firmware 93F and greater compatible with all RCBU hardware. Firmware 93D and earlier can only be loaded in RBCU Rev D and earlier.
3206	UNKNOWN DRIVE	Drive reports rating not found in bypass software	Drive does not match drives configured in bypass RBCU	Replace RBCU or reload with most current firmware
3207	UNKNOWN BYPASS	NA	NA	Replace RBCU or load most current firmware Contact ABB at 1-800-HELP-365 option 4 Replace RBCU or load most current firmware

Fault History

See page *28*.

Alarm listing

The following table lists the alarms by code number and describes each.

Alarm Code	Alarm Name In Panel	Alarm	Possible Cause	Corrective Action
4001	INP PHASE A LOSS	Alarm will occur in drive mode. In bypass, alarm will occur if bypass contactor has not closed. Unit will trip on Fault 3010 if the bypass contactor is closed	Loose J8 connector Loose wiring on Contactor assembly. Blown upstream fuse	Check J8 connector Check yellow wire on input block Check incoming voltage, phase to ground
4002	INP PHASE B LOSS	Alarm will occur in drive mode. In bypass, alarm will occur if bypass contactor has not closed. Unit will trip on Fault 3011 if the bypass contactor is closed	Loose J8 connector Loose wiring on Contactor assembly. Blown upstream fuse	Check J8 connector Check black wire on input block Check incoming voltage, phase to ground
4003	INP PHASE C LOSS	Alarm will occur in drive mode. In bypass, alarm will occur if bypass contactor has not closed. Unit will trip on Fault 3012 if the bypass contactor is closed	Loose J8 connector Loose wiring on Contactor assembly. Blown upstream fuse	Check J8 connector Check red wire on input block Check incoming voltage, phase to ground

Alarm Code	Alarm Name In Panel	Alarm	Possible Cause	Corrective Action
4004	AUTO TRANSFER	Message is displayed when the drive faults and the bypass switches to bypass mode as configured in Parameter 1608	Drive fault	Check drive
4005	EXT COMM ERR	Time between fieldbus messages has exceeded timeout interval set with parameter 3005	Incorrect Communication settings in Group 51 & 53. Poor Connections Noise on Communication Line	Check Group 51& 53 Tighten Connections Check Communication Cable Grounding
4006	Selected by PAR 1620: RUN ENABLE DAMPER END SWITCH VALVE OPENING PRE-LUBE CYCLE	Alarm will occur when start order is given and the "RUN Enable" is not present	Run Enable condition is not satisfied. Bad 24v supply Bad digital input	Check 24 Volts on RBCU unit Check for 24 volts on respective DI when condition is satisfied Check Parameter 0103 for status of digital input
4007	PCB TEMP	RBCU unit reached 181 degrees Fahrenheit, 83 degrees Celsius	Cabinet cooling has failed Ambient conditions too high Bad RBCU unit	Stop drive and let cool down and restart Add additional cooling Replace RBCU
4008	DRIVE SETUP	Alarm generated when configuration of drive is such that bypass can not properly control the drive. Specifically, drive parameters 1001,1002,1601, 1608	Incorrect parameters settings	Set Parameter 1001 to "COMM" Set Parameter 1002 to "COMM" Set Parameter 1601 to "COMM" Set Parameter 1608 to "COMM"
4009	BYPASS RUN DELAY	Alarm is generated when a bypass start command is issued and there is non zero time value in bypass parameter 1614	NA	NA
4010	MTR OVERLOAD	Bypass warning if motor overload conditions exist as defined in the drive	Drive Mode: Bad Motor Bad Ct's Bad RBCU Bypass mode: Bad motor Bad CT's Bad RBCU Either mode: low input voltage	Drive Mode: Refer to 550 manual for proper troubleshooting techniques Bypass Mode: Check that J2 connector is firmly seated in RBCU Check input voltage Does overload condition exist?

Alarm Code	Alarm Name In Panel	Alarm	Possible Cause	Corrective Action
4011	MTR UNDERLOAD	Alarm comes at half the time of a mtr underload fault. See fault 3017 for further text	NA	Parameter 3002 is the time Parameter 3003 is the level
4012	BYPASS DISABLED	Alarm will be generated if parameter 1613 is set to "Disable"	NA	NA
4013	DRIVE LINK ERROR	Same as Fault 3019 however will occur when not in supervisory mode	Bad cable between drive and bypass Communication improperly set in drive Parameter 98.02(Modbus) Application Macro in 99.02 set to 15 (text)	Proper seating of cable in drive and RBCU(connector J3) Check drive parameter 98.02 and 99.02 Check drive Group 53 Follow DriveLink recovery procedure
4014	DRIVE TEST	Alarm is generated when bypass parameter 1617 is set to "enable"	NA	NA
4015	START DRIVE 1ST	Message displayed on initial "out of box" power up sequence	NA	Run drive in Hand
4016	INP VOLTAGE LOW	3-Phase input voltage has not reached a sufficient level to enable editing of parameters via the keypad. This message is generated within a few seconds of power up	NA	Loose J7 connector Low input voltage. Incoming voltage has not reached at least 155 VAC within a few seconds of powerup
4019	OVERRIDE 1	Alarm is generated when Smoke Control is active	NA	Check Parameter 0103 and 0104 for digital input status
4020	OVERRIDE 2	Alarm is generated when Fireman's Override is active	NA	Check Parameter 0103 and 0104 for digital input status
4021	Selected by PAR 1621 START ENABLE 1 VIBRATION SWITCH FIRESTAT FREEZESTAT OVERPRESSURE VIBRATION TRIP SMOKE ALARM SAFETY OPEN LOW SUCTION PRES	Alarm will occur when start order is given and the "RUN Enable" is not present	Run Enable condition is not satisfied. Bad 24v supply Bad digital input 24 V common is not tied to Digital input common on bypass when using external 24 v supply	Check 24 Volts on RBCU unit Check for 24 volts on respective DI when condition is satisfied Check Parameter 0103 For status of digital input

Alarm Code	Alarm Name In Panel	Alarm	Possible Cause	Corrective Action
4022	Selected by PAR 1622 START ENABLE 2 VIBRATION SWITCH ... LOW SUCTION PRES	Alarm will occur when start order is given and the "RUN Enable" is not present	Run Enable condition is not satisfied. Bad 24v supply Bad digital input 24 V common is not tied to Digital input common on bypass when using external 24 v supply	Check 24 Volts on RBCU unit Check for 24 volts on respective DI when condition is satisfied Check Parameter 0103 For status of digital input
4023	Selected by PAR 1623 START ENABLE 3 VIBRATION SWITCH ... LOW SUCTION PRES	Alarm will occur when start order is given and the "RUN Enable" is not present	Run Enable condition is not satisfied. Bad 24v supply Bad digital input 24 V common is not tied to Digital input common on bypass when using external 24 v supply	Check 24 Volts on RBCU unit Check for 24 volts on respective DI when condition is satisfied Check Parameter 0103 For status of digital input
4024	Selected by PAR 1624 START ENABLE 4 VIBRATION SWITCH ... LOW SUCTION PRES	Alarm will occur when start order is given and the "RUN Enable" is not present	Run Enable condition is not satisfied. Bad 24v supply Bad digital input 24 V common is not tied to Digital input common on bypass when using external 24 v supply	Check 24 Volts on RBCU unit Check for 24 volts on respective DI when condition is satisfied Check Parameter 0103 For status of digital input
4025	LOCAL DISABLED	Alarm is displayed if MODE LOCK (16.29) is set to AUTO MODE and the Hand or Off key is pressed		
4026	AUTO DISABLED	This alarm is displayed if MODE LOCK (1629) is set to LOCAL MODE and the Auto key is pressed.		
4027	COMM CONFIG ERR	Alarm is displayed if the drive and bypass MAC addresses are equal or invalid.	E-Clipse parameters 5002(BP MAC ID) & 5302 (DV MAC ID) are set to the same value	Change MAC address to unique values
4028	FBA PAR CONF	Non embedded fieldbus has detected an error in Group 51 parameters		Verify Group 51 parameters
4029	DRIVE FAULTED	The drive is faulted.		Reset drive

Bypass status listing

Bypass Status (16 Characters)	Condition	Description
DRIVE/BYPASS?	DRIVE SELECTED BYPASS SELECTED	Displays which one is selected, drive or bypass
SAFETIES?	OPEN CLOSED	Displays if safeties (=START ENABLE 1 and/or START ENABLE 2) have been applied, or if they are missing
RUN PERMISSIVES?	OPEN CLOSED	Displays if RUN ENABLE is present or not
START REQUEST?	NOT PRESENT PRESENT	Displays if start request has been applied to the system
AUTO TRANSFER?	NOT TRANSFERRED TRANSFERRED	Displays if the system is in Auto Transfer state or not. Does not reflect to PAR 16.08 AUTO XFER value itself
BYP OVERRIDE 1?	NOT ACTIVATED ACTIVATED	Status of Override 1
BYP OVERRIDE 2?	NOT ACTIVATED ACTIVATED	Status of Override 2
DRIVE FAULTED?	NO YES	Displays if drive is faulted or not
BYPASS FAULTED?	NO YES	Displays if bypass is faulted or not
SYSTEM STARTED?	NO YES	Displays if system is started or not
SYSTEM RUNNING?	NO YES	Displays if system is running or not
BYPASS ALARMS?	NO ALARMS ALARM ACTIVE	Displays if there is an active alarm(s) in bypass or not
HAND/OFF/AUTO?	OFF MODE HAND MODE AUTO MODE	Displays operating mode of the bypass - OFF, HAND or AUTO

Error messages

#	Error Message	Description
1	CAN'T EDIT PAR IS READ ONLY	Try to save value (=press the ENTER key in Parameter Edit State) of a read-only parameter. E.g. try to change value PAR 01.02 INPUT VOLT
2	CAN'T EDIT WHEN STARTED	Try to change value of a parameter, which is allowed to be changed only when system is not started. E.g. PAR 16.02 RUN ENABLE
3	CAN'T EDIT UP+DOWN ONLY	Try to change value of a "reset only" parameter other than zero. UP+DOWN buttons must be pressed simultaneoulsy for requesting default value of the PAR on the display (value zero), and after that ENTER pressed for saving it (reset the parameter). E.g. PAR 04.01 LAST FAULT
4	CAN'T EDIT INP VOLTAGE LOW	Input voltage too low. Changing of parameters prohibited since system cannot save values to nv-mem w/ insufficient voltage.
5	CAN'T EDIT PAR IS HIDDEN	Try to save value (=press the ENTER key in Parameter Edit State) of a hidden parameter. Should not be possible. If hidden parameters are turned visible, this message is not given.
6	CAN'T EDIT UNDER LO-LIMIT	Try to save value which is over LO-LIMIT of the parameter. Should not be possible when changing parameters from control panel.
7	CAN'T EDIT UNDER HI-LIMIT	Try to save value which is over HI-LIMIT of the parameter. Should not be possible when changing parameters from control panel.
8	CAN'T EDIT ENUM VAL ONLY	Try to save value which is out of enumerated value list. Should not be possible when changing parameters from control panel.
9	CAN'T EDIT NO DEFAULT	Try to request default value (=press UP and DOWN buttons simultaneously) for a parameter which is defined not to have a default value. Should not be possible when changing parameters from control panel.
10	CAN'T EDIT TRY AGAIN.	Parameter system is busy, e.g. application macro change is in process at the same time when someone is trying to save a value for a parameter. Should not be possible when changing parameters from control panel.

Maintenance

See *Maintenance* for the ACH550-UH on page *31*.

ACH550-PCR/PDR

Installation

This information is unique to ACH550 input disconnect configurations (PCR or PDR). The ACH550 with Input Disconnect is an ACH550 AC adjustable frequency drive packaged with an input disconnect switch or circuit breaker. Refer to the *Installation* instructions on page *3*, for all other information. **Failure to observe the warnings and instructions may cause a malfunction or personal hazard.**

WARNING! Before you begin read *Safety* on page *2*.

WARNING! When the ACH550 with Input Disconnect is connected to the line power, the Motor Terminals T1, T2, and T3 are live even if the motor is not running. Do not make any connections when the ACH550 with Input Disconnect is connected to the line. Disconnect and lock out power to the drive before servicing the drive. Failure to disconnect power may cause serious injury or death.

1. Install wiring

WARNING!

- Metal shavings or debris in the enclosure can damage electrical equipment and create a hazardous condition. Where parts, such as conduit plates require cutting or drilling, first remove the part. If that is not practical, cover nearby electrical components to protect them from all shavings or debris.
- Do not connect or disconnect input or output power wiring, or control wires, when power is applied.
- Never connect line voltage to drive output Terminals T1, T2, and T3.
- Do not make any voltage tolerance tests (Hi Pot or Megger) on any part of the unit. Disconnect motor wires before taking any measurements in the motor or motor wires.
- Make sure that power factor correction capacitors are not connected between the drive and the motor.

Connection diagrams – standard drive with input disconnect (wall mounted)

The following figure shows the Standard Drive with Input Disconnect (wall mounted) wiring connection points.

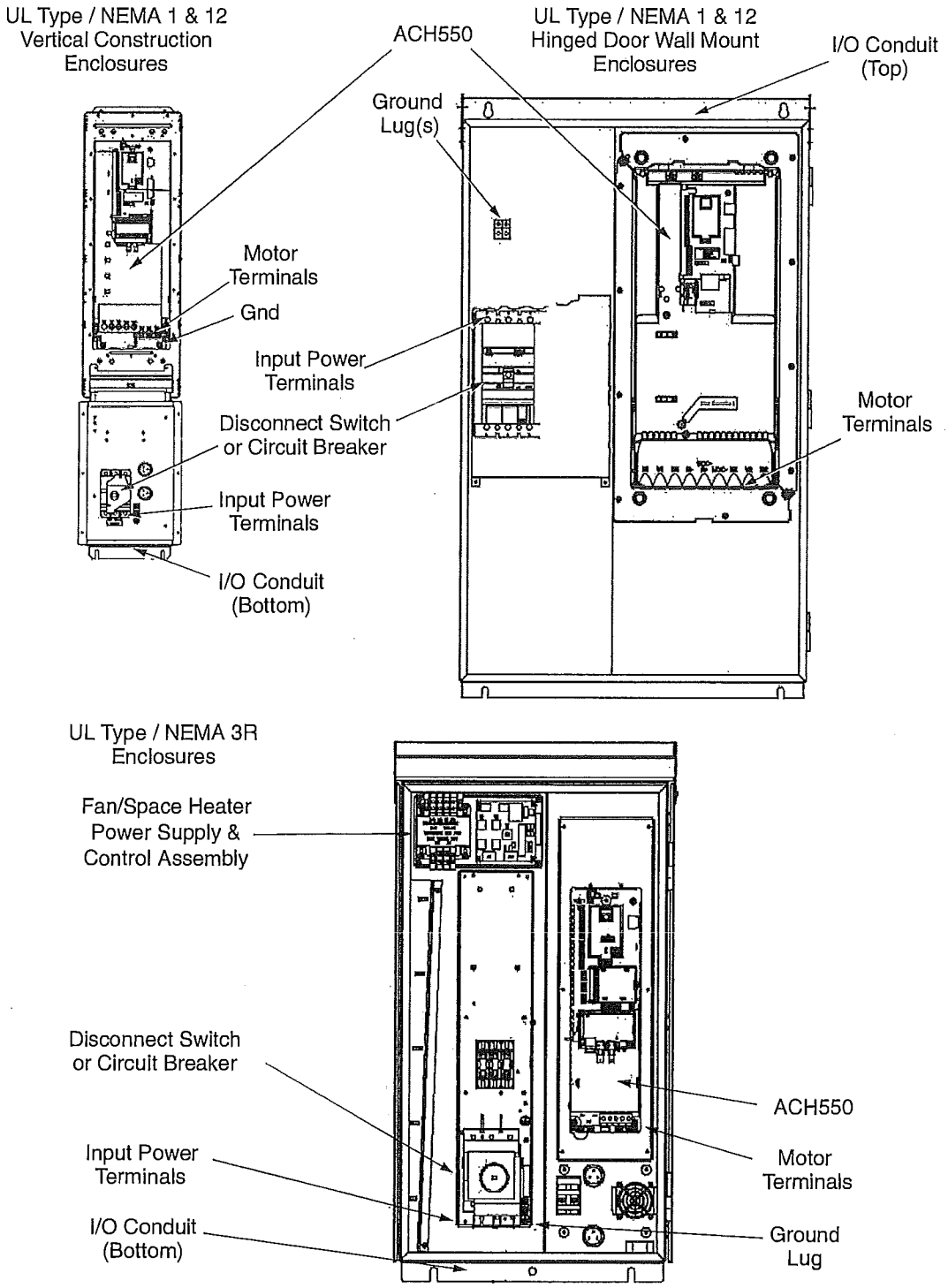

Note: Type 3R enclosures are designed to be mounted on a wall. For 3R enclosure back plates which maintain 3R integrity when the enclosure is mounted on an open rack system, contact your ABB HVAC Drives Distributor.

Connection diagrams – standard drive with input disconnect (floor mounted)

Floor mounted UL Type / NEMA 1 & 12 Drive with Input Disconnect units are configured for wiring access from the top and include a removable conduit mounting plate. The following figure shows the wiring connection points.

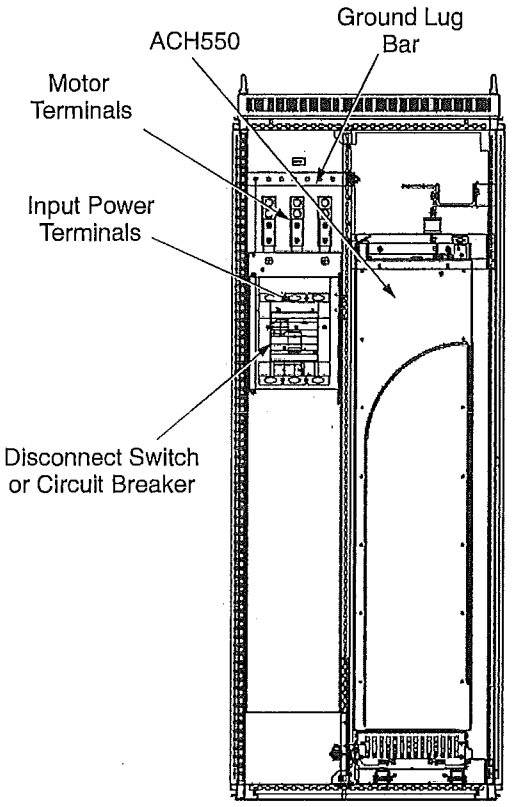

Line input connections – standard drive with input disconnect configurations

Connect input power to the terminals of the disconnect switch or circuit breaker. Connect the equipment grounding conductor to the ground lug at the top of the enclosure. The figure below shows the connection points for Standard Drive with Input Disconnect configurations.

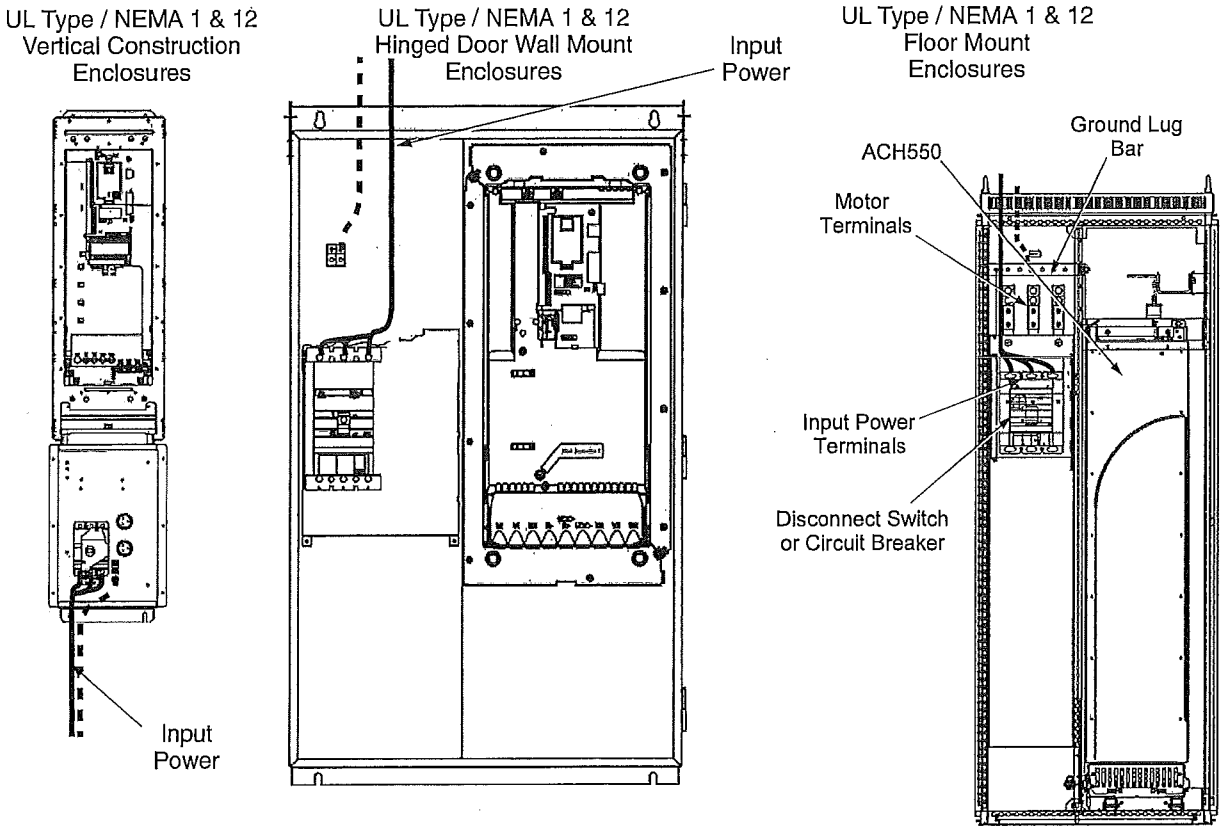

Dashed line is ground run.

Note: The terminals on disconnect switches for the following rated ACH550-PDR products is 7 in-lbs. Do not use a power driver or over tighten to prevent breaking screw heads or stripping the terminal.

230 VAC	460 VAC	600 VAC
-04A6-2	-03A3-4	-02A7-6
-06A6-2	-04A1-4	-03A9-6
-07A5-2	-06A9-4	-06A1-6
-012A-2	-08A8-4	-09A0-6
-017A-2	-012A-4	-011A-6
-024A-2	-015A-4	-017A-6
-031A-2	-023A-4	

Power connection terminals

The following tables show maximum wire size and required tightening torque for incoming power, grounding and motor terminals.

208/240 Volt		Base Drive Frame Size	Power Wiring Data[2]						
HP	Type Code[1]		Circuit Breaker UL Type/ NEMA 1 &12	Circuit Breaker UL Type / NEMA 3R	Disconnect Switch UL Type/ NEMA 1&12	Disconnect Switch UL Type/ NEMA 3R	Motor Terminals	Ground Lugs UL Type/ NEMA 1&12	Ground Lugs UL Type / NEMA 3R
1	ACH550-PxR-04A6-2	R1	#10 35 in-lbs	#10 35 in-lbs	#10 7 in-lbs	#10 7 in-lbs	Refer to Drive's power connection terminals	#10 35 in-lbs	#10 35 in-lbs
1.5	ACH550-PxR-06A6-2	R1							
2	ACH550-PxR-07A5-2	R1							
3	ACH550-PxR-012A-2	R1							
5	ACH550-PxR-017A-2	R1							
7.5	ACH550-PxR-024A-2	R2	#6 45 in-lbs	#6 45 in-lbs	#8 7 in-lbs	#8 7 in-lbs		#6 35 in-lbs	#6 35 in-lbs
10	ACH550-PxR-031A-2	R2							
15	ACH550-PxR-046A-2	R3	#3 50 in-lbs	#3 50 in-lbs	#4 18 in-lbs	#4 18 in-lbs		#3 50 in-lbs	#3 50 in-lbs
20	ACH550-PxR-059A-2	R3							
25	ACH550-PxR-075A-2	R4	#1 50 in-lbs	#1 50 in-lbs	#1 55 in-lbs	#1 55 in-lbs		#2 50 in-lbs	#2 50 in-lbs
30	ACH550-PxR-088A-2	R4	350 MCM 274 in-lbs	300 MCM 200 in-lbs	#1/0 70 in-lbs	#1/0 70 in-lbs			
40	ACH550-PxR-114A-2	R4			300 MCM 275 in-lbs	300 MCM 200 in-lbs		3 x #3/0 250 in-lbs	#2/0 275 in-lbs
50	ACH550-PxR-143A-2	R6							
60	ACH550-PxR-178A-2	R6							
75	ACH550-PxR-221A-2	R6	2 x 250 MCM 274 in-lbs	2 x 250 MCM 275 in-lbs	2 x 250 MCM 274 in-lbs	2 x 250 MCM 275 in-lbs			350 MCM 100 in-lbs
100	ACH550-PxR-248A-2	R6							

1. "PxR" represents both PCR and PDR.

2. Torque values shown relate to current production. Check component labels on previously installed units for required tightening torque.

480 Volt		Base Drive Frame Size	Power Wiring Data[2]						
HP	Type Code[1]		Circuit Breaker UL Type/ NEMA 1 &12	Circuit Breaker UL Type/ NEMA 3R	Disconnect Switch UL Type/ NEMA 1&12	Disconnect Switch UL Type/ NEMA 3R	Motor Terminals	Ground Lugs UL Type/ NEMA 1&12	Ground Lugs UL Type / NEMA 3R
1/1.5	ACH550-PxR-03A3-4	R1	#10 35 in-lbs	#10 35 in-lbs	#10 7 in-lbs	#10 7 in-lbs	Refer to Drive's power connection terminals	#10 35 in-lbs	#10 35 in-lbs
2	ACH550-PxR-04A1-4	R1							
3	ACH550-PxR-06A9-4	R1							
5	ACH550-PxR-08A8-4	R1							
7.5	ACH550-PxR-012A-4	R1							
10	ACH550-PxR-015A-4	R2	#6 45 in-lbs	#6 45 in-lbs	#8 7 in-lbs	#8 7 in-lbs		#6 35 in-lbs	#6 35 in-lbs
15	ACH550-PxR-023A-4	R2							
20	ACH550-PxR-031A-4	R3	#3 50 in-lbs	#3 50 in-lbs				#3 50 in-lbs	#3 50 in-lbs
25	ACH550-PxR-038A-4	R3			#4 18 in-lbs	#4 18 in-lbs			
30	ACH550-PxR-045A-4	R3							
40	ACH550-PxR-059A-4	R4	#1 50 in-lbs	#1 50 in-lbs				#1 50 in-lbs	#1 50 in-lbs
50	ACH550-PxR-072A-4	R4			#1 55 in-lbs	#1 55 in-lbs			
60	ACH550-PxR-078A-4	R4			#1 50 in-lbs	#1 62 in-lbs			
75	ACH550-PxR-097A-4	R4	350 MCM 274 in-lbs	300 MCM 200 in-lbs	#1/0 70 in-lbs	#1/0 70 in-lbs		3 x #3/0 250 in-lbs	#2 50 in-lbs
100	ACH550-PxR-125A-4	R5			300 MCM 275 in-lbs	300 MCM 200 in-lbs			#2/0 375 in-lbs
125	ACH550-PxR-157A-4	R6							
150	ACH550-PxR-180A-4	R6							
200	ACH550-PxR-246A-4	R6	2 x 250 MCM 274 in-lbs	500 MCM 274 in-lbs	2 x 250 MCM 274 in-lbs	500 MCM 274 in-lbs			350 MCM 100 in-lbs
250	ACH550-PxR-316A-4	R8	2 x 500 MCM 274 in-lbs		2 x 500 MCM 274 in-lbs			5 Bus Bar Holes (13/32")	
300	ACH550-PxR-368A-4	R8							
350	ACH550-PxR-414A-4	R8							
400	ACH550-PxR-486A-4	R8							
450	ACH550-PxR-526A-4	R8	3 x 400 MCM 375 in-lbs		3 x 400 MCM 375 in-lbs				
500	ACH550-PxR-602A-4	R8							
550	ACH550-PxR-645A-4	R8							

1. "PxR" represents both PCR and PDR.

2. Torque values shown relate to current production. Check component labels on previously installed units for required tightening torque.

600 Volt		Frame Size	Power Wiring Data[2]						
HP	Type Code[1]		Circuit Breaker UL Type / NEMA 1 &12	Circuit Breaker UL Type / NEMA 3R	Disconnect Switch UL Type / NEMA 1&12	Disconnect Switch UL Type / NEMA 3R	Motor Terminals	Ground Lugs UL Type / NEMA 1&12	Ground Lugs UL Type / NEMA 3R
2	ACH550-PxR-02A7-6	R2	#6 62 in-lbs	#6 62 in-lbs	#8 7 in-lbs	#8 7 in-lbs	Refer to Drive's power connection terminals	#6 35 in-lbs	#6 35 in-lbs
3	ACH550-PxR-03A9-6	R2							
5	ACH550-PxR-06A1-6	R2							
7.5	ACH550-PxR-09A0-6	R2							
10	ACH550-PxR-011A-6	R2							
15	ACH550-PxR-017A-6	R2							
20	ACH550-PxR-022A-6	R3	#3 62 in-lbs	#3 62 in-lbs				#3 50 in-lbs	#3 50 in-lbs
25	ACH550-PxR-027A-6	R3							
30	ACH550-PxR-032A-6	R4	#1 62 in-lbs	#1 62 in-lbs	#4 18 in-lbs	#4 18 in-lbs		#2 50 in-lbs	#2 50 in-lbs
40	ACH550-PxR-041A-6	R4							
50	ACH550-PxR-052A-6	R4			#1 55 in-lbs	#1 55 in-lbs			
60	ACH550-PxR-062A-6	R4			#1 62 in-lbs	#1 62 in-lbs			
75	ACH550-PxR-077A-6	R6	350 MCM 274 in-lbs	300 MCM 275 in-lbs	#1/0 70 in-lbs	#1/0 70 in-lbs		3 x #3/0 250 in-lbs	#2/0 375 in-lbs
100	ACH550-PxR-099A-6	R6							
125	ACH550-PxR-125A-6	R6			300 MCM 275 in-lbs	300 MCM 200 in-lbs			
150	ACH550-PxR-144A-6	R6							

1. "PxR" represents both PCR and PDR.

2. Torque values shown relate to current production. Check component labels on previously installed units for required tightening torque.

UL Type / NEMA 3R
Enclosures

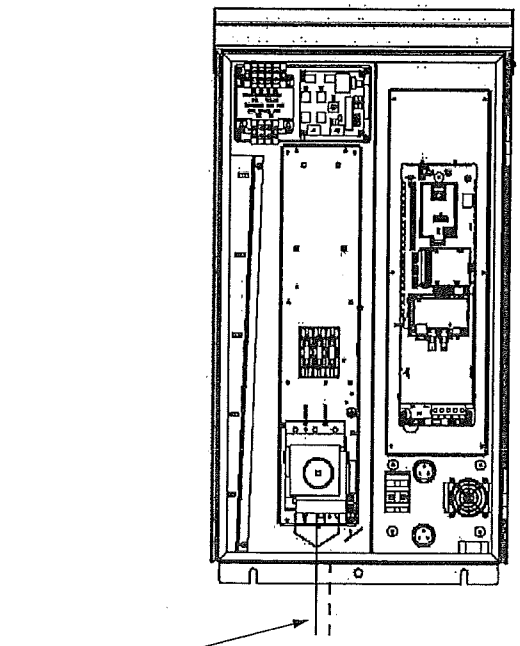

WARNING! Check the motor and motor wiring insulation before connecting the ACH550 to line power. Follow the procedure on page *12*. Before proceeding with the insulation resistance measurements, check that the ACH550 is disconnected from incoming line power. Failure to disconnect line power could result in death or serious injury.

Note: For the remainder of the wiring (motor and control wiring) refer to page *7*.

Operation

This information is unique to ACH550 input disconnect configurations (PCR or PDR). Refer to the *Operation* instructions on page *21* for all other information.

Input disconnect configuration

The ACH550 with Input Disconnect is an ACH550 AC adjustable frequency drive packaged with an input disconnect switch or circuit breaker, and with a door interlocked, external operating handle. The operating handle can be padlocked in the OFF position (padlock not supplied). Enclosure options are UL Type 1, UL Type 12, and UL Type 3R (NEMA 1, NEMA 12, and NEMA 3R).

The following is a typical power diagram.

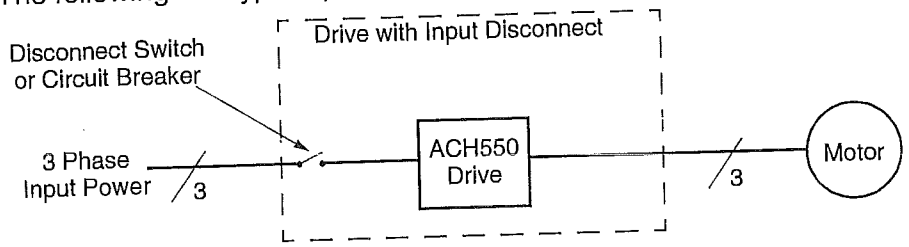

The following shows the front view of the ACH550 Drive with Input Disconnect standard configurations, and identifies the major components.

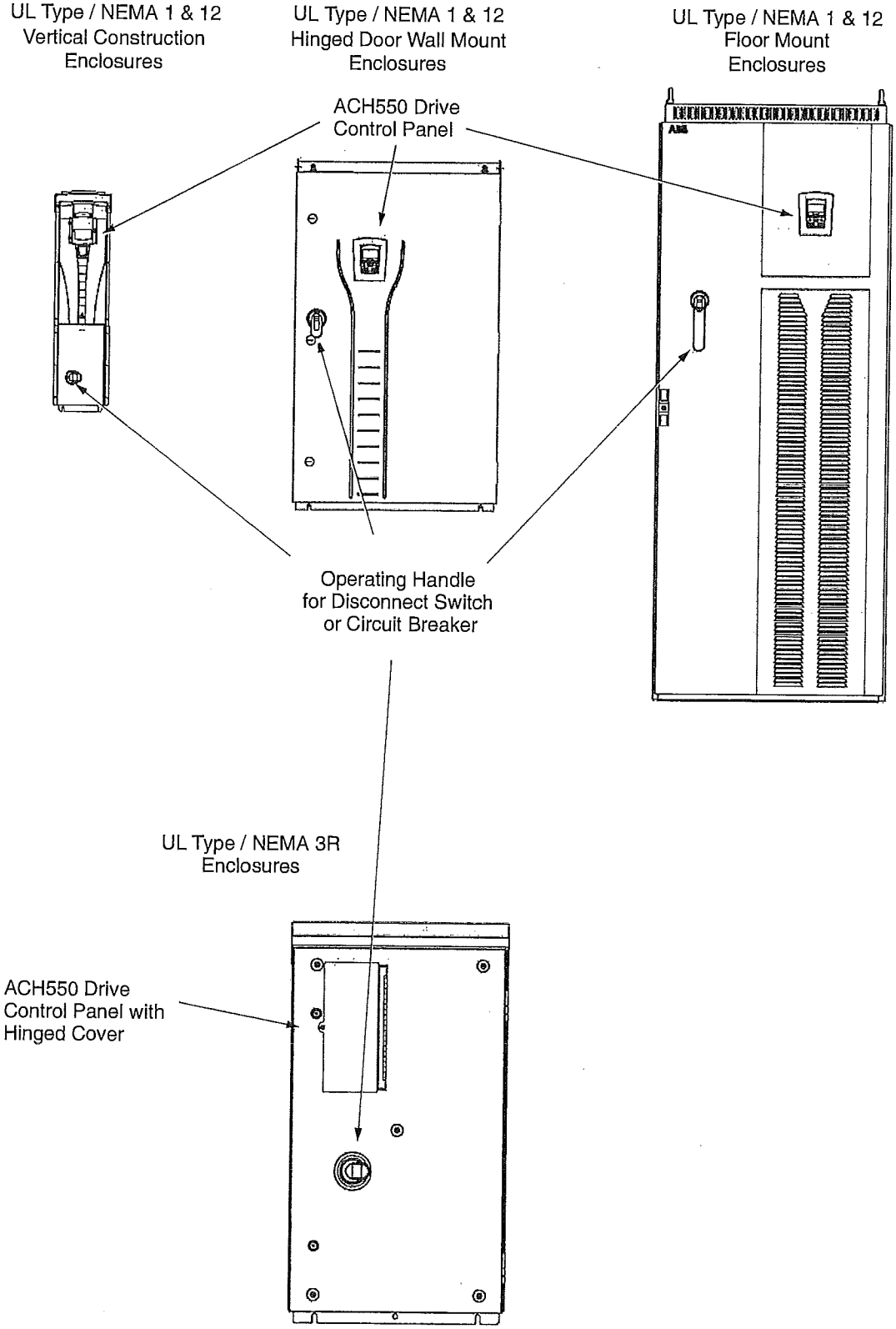

Maintenance

Maintenance intervals

If installed in an appropriate environment, the drive requires very little maintenance. This table lists the routine maintenance intervals recommended by ABB for ACH550 enclosures in addition to the intervals on page *31*.

Maintenance	Configuration	Interval	Instruction
Check/replace hinged door wall mount enclosure inlet air filter	Hinged door wall mount UL Type / NEMA 12 enclosures	Check every 3 months. Replace as needed.	*Enclosure air filter replacement – UL Type / NEMA 12 hinged door wall mount enclosures* on page *87*.
Check/replace floor mount enclosure inlet air filter	Floor mount UL Type / NEMA 12 enclosures	Check every 3 months. Replace as needed.	See *Maintenance* on page *34* and *Enclosure air filter replacement – UL Type / NEMA 12 hinged door wall mount enclosures* on page *87*.
Check/replace NEMA 3R enclosure air filters	UL Type / NEMA 3R enclosures - PX3R-5 and higher	Check every 3 months. Replace as needed.	See PX3R dimensional information.
Check/replace floor mount enclosure exhaust air filter.	Floor mount UL Type / NEMA 12 enclosures	Check every 6 months. Replace as needed.	See *Maintenance* on page *35* and *Enclosure air filter replacement – UL Type / NEMA 12 hinged door wall mount enclosures* on page *87*.

Enclosure air filter replacement – UL Type / NEMA 12 hinged door wall mount enclosures

Filter material

Material	Filter Type
American Air Filter (358-35-06A-12A)	Polykleon White 12.7 mm x 152.4 mm x 304.6 mm stk

This procedure applies to drive with input disconnect configurations in UL Type / NEMA 12 hinged door wall mount enclosures. This filter is located at the bottom of the enclosure. Use the following procedure to check and replace filters.

1. On the enclosure, remove the screw holding the filter bracket in place.
2. Slide the filter bracket forward until the hooks on the bracket clear the slots on the enclosure base. This step allows the filter and bracket to drop free from the enclosure.

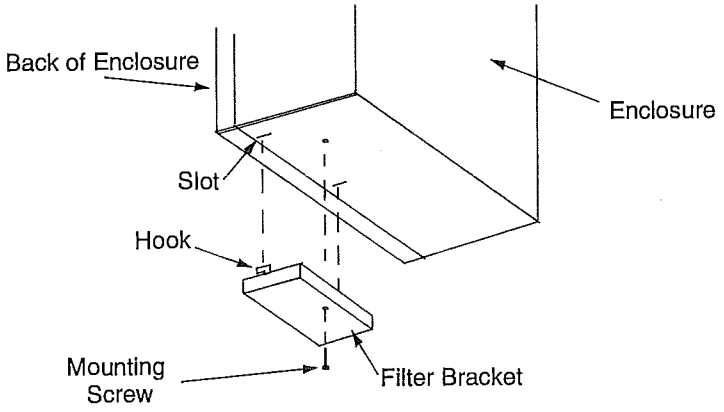

3. Lift the filter out of the filter bracket and replace as appropriate.
4. With the filter in the filter bracket, align the hooks on the bracket with the slots in the enclosure base, and press the hooks up into the slots.
5. Slide the filter bracket back, making sure that the hooks catch on the enclosure.
6. Replace the mounting screw. Tighten until the gasket on the bracket is about 50% compressed.

Enclosure air filter replacement – UL Type / NEMA 12 floor mount enclosures

Filter material

Enclosure Type	Inlet (door)	Outlet (roof)
UL Type / NEMA 12	3AUA0000006723 (qty 1)	3AUA0000006722 (qty 2)

Note: When installing the filter media, the white side must face the outside of the cabinet and the colored side must face the inside of the cabinet. Refer to page *34*.

Diagnostics

Refer to the *Diagnostics* instructions on page *24*.

3AUA0000081824 REV A
Effective: 08/01/2010

ABB Inc.
16250 West Glendale Drive
New Berlin, WI 53151
USA
Telephone +1 800 752-0696
Fax +1 262 785-0397
Internet www.abb.us/drives

GUIDE FOR CAPACITOR REFORMING IN ACS50, ACS55, ACS150, ACS310, ACS350, ACS355, ACS550, ACH550 and R1-R4 OINT-/SINT-boards.

1 Reforming

The drive DC link capacitors need to be reformed (re-aged) if the drive has been non-operational for more than one year. Without reforming, capacitors may be damaged when the drive starts to operate. The reforming methods introduced in this instruction require that the drive has been stocked clean and dry. It is recommended to reform the capacitors once a year.

1.1 How to check the drive's age

Check the date of manufacture for the drive from the serial number shown on the drive labels. The serial number defines the year and week when the drive was manufactured.

There are two formats of serial numbers. Check which format the drive has and determine the date of manufacture:

Format 1:

YWWXXXXX (8 digits)

Y = year (...6,7,8,9,A,B... for ...2006, 2007, 2008, 2009, 2010, 2011...)
WW = week

Format 2:

XYYWWXXXXX (10 digits)

YY = year (...06,07,08,09,10... for ...2006, 2007, 2008, 2009, 2010...)
WW = week

1.2 Reforming time

The intermediate circuit of the drive is kept in its nominal voltage for the reforming time to "wake up" the capacitors. The reforming time required depends on how long the drive has been stocked (non-operational). See figure 1.

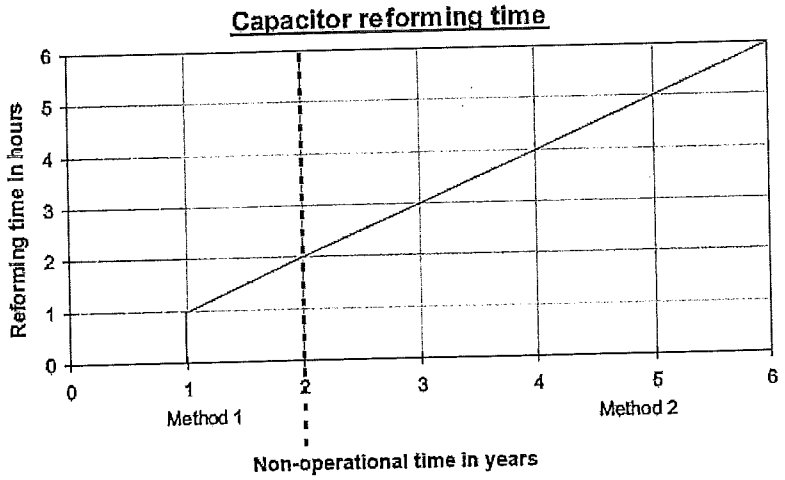

Figure 1. Capacitor reforming time.

1.3 Drives stocked (non-operational) for less than 2 years

Switch the power on to the drive for a time given in figure 1 (Method 1). The drive "wakes up" its capacitors by itself. Power drives up once a year to keep the capacitors in operational condition.

1.4 Drives stocked (non-operational) for 2 years and over

Use method 2A or method 2B for capacitor reforming if the drives have been stocked (non-operational) for two or more years.

a) Method 2A

Capacitors are reformed by switching in a rectifier and resistor circuit, which is connected to the drive input. The reforming circuit is given in figure 2 below. Circuit component values for different voltages are given in table 1. See the reforming time in figure 1.

WARNING: Disconnect the mains supply while the reforming circuit is connected.

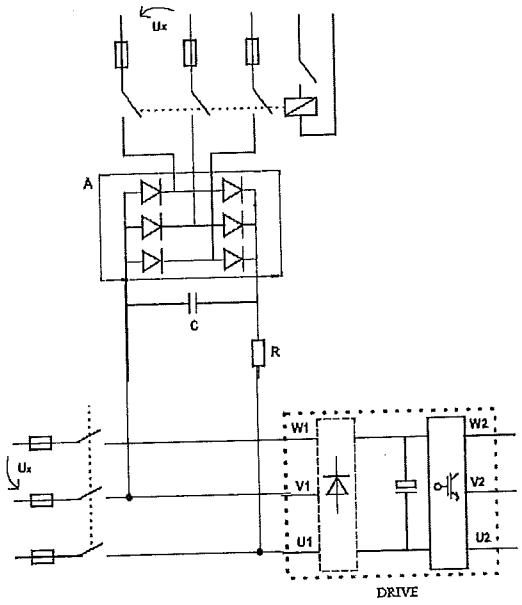

Note! Markings for drive input differs between drive types:

ACS550	U1	V1	W1
ACS150/310/320/350/355	U1/L	V1/N	W1
ACS50/55	L/R	N/S	

Figure 2. The reforming circuit for method 2A.

Voltage	Recommended components		
	A	R	C
200 V < U_x < 240 V	SKD 82/16	220 Ω / 700 W	22 nF / 2000 V
380 V < U_x < 480 V	SKD 82/16	470 Ω / 1200 W	22 nF / 2000 V

Table 1. Circuit component values for different voltages.

b) Method 2B

Capacitor reforming is based on DC power supply, which is connected to the drive input. The power supply current charges drive capacitors. If the power supply cannot limit the current, the voltage is increased gradually (with e.g. 100V steps). The maximum recommended reforming current is 100mA. An appropriate reforming voltage is (1.35 ... $\sqrt{2}$) * U_x. See the reforming time in figure 1.

WARNING: Disconnect the mains supply while the reforming circuit is connected.

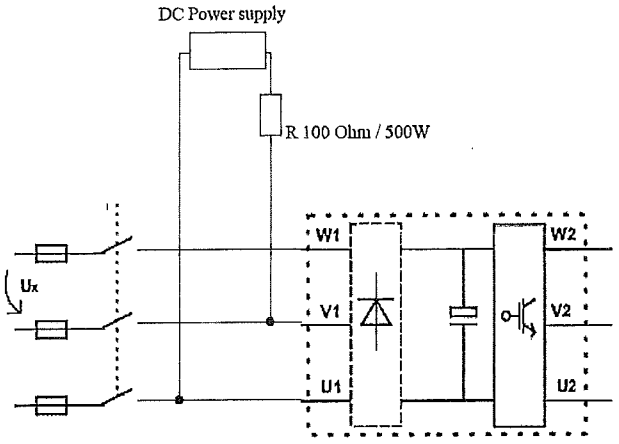

Note! Markings for drive input differs between drive types:

ACS550	U1	V1	W1
ACS150/310/320/350/355	U1/L	V1/N	W1
ACS50/55	L/R	N/S	

Figure 3. The reforming circuit for method 2B.

2 Replacement

The drive intermediate circuit employs several electrolytic capacitors. Capacitor life can be prolonged by lowering the ambient temperature.

It is not possible to predict a capacitor failure. Capacitor failure is usually followed by an input power fuse failure or a fault trip. Contact ABB if capacitor failure is suspected. Replacements for ACS550 frame sizes R5 and R6 are available from ABB. Do not use other than ABB specified spare parts.

3 Reforming instructions for R1-R4 OINT- and SINT-boards

Capacitor reforming is based on DC power supply, which is connected to the board X8 and X10 connectors. X8 is UDC+ and X10 is UDC-. The power supply current charges drive capacitors. If the power supply cannot limit the current, the voltage is increased gradually (with e.g. 100V steps). The maximum recommended reforming current is 100mA. An appropriate reforming voltage is (1.35 ... √2) * U_x. See the reforming time in figure 1.

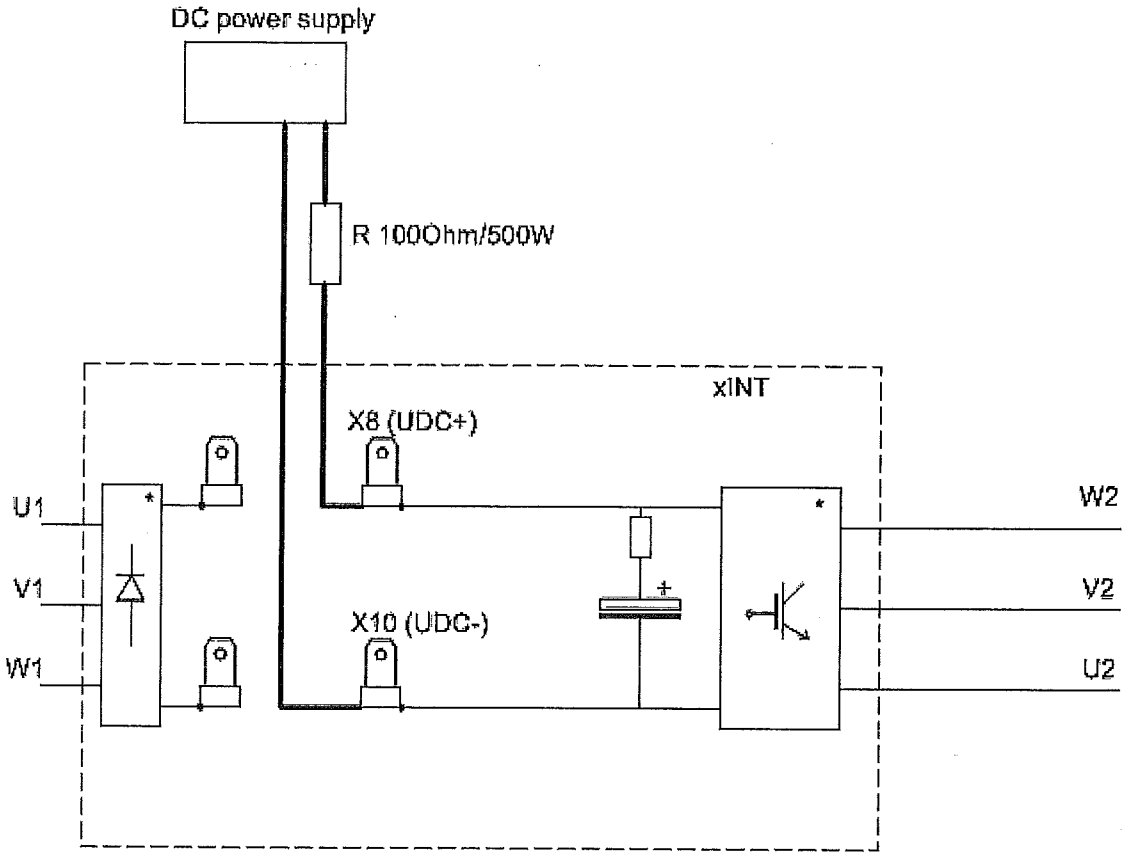

Tag: FSD

Specification: 15890

Manufacture: Ruskin

Drawing reference: M502

Location: B2 Ramp Level

COMBINATION FIRE AND SMOKE DAMPER SCHEDULE

BASIS OF DESIGN: RUSKIN

DESIGNATION TYPE	LOCATION	MODEL NO.	DIMENSIONS (IN)	AIR HANDLING SYSTEM No.	LEAKAGE CLASS	SMOKE PURGE POSITION	FAILED POSITION	NO. OF ACTUATORS	POWER SUPPLY	REMARKS
FSD-11.1	RAMP LEVEL CEILING	FSD60	58 x 30	AC-11	1	OPEN	CLOSED	1	120 VAC	1, 2, 3
FSD-11.2	RAMP LEVEL CEILING	FSD60	48 x 30	AC-11	1	OPEN	CLOSED	1	120 VAC	1, 2, 3
FSD-11.3	RAMP LEVEL CEILING	FSD60	38 x 30	AC-11	1	OPEN	CLOSED	1	120 VAC	1, 2, 3
FSD-11.4	RAMP LEVEL CEILING	FSD60	28 x 12	AC-11	1	OPEN	CLOSED	1	120 VAC	1, 2, 3
FSD-11.5	RAMP LEVEL CEILING	FSD60	28 x 12	AC-11	1	OPEN	CLOSED	1	120 VAC	1, 2, 3
FSD-11.6	RAMP LEVEL CEILING	FSD60	38 x 12	HV-2	1	OPEN	CLOSED	1	120 VAC	1, 2, 3
FSD-11.7	RAMP LEVEL CEILING	FSD60	48 x 12	HV-2	1	OPEN	CLOSED	1	120 VAC	1, 2, 3
FSD-11.8	RAMP LEVEL CEILING	FSD60	38 x 12	HV-2	1	OPEN	CLOSED	1	120 VAC	1, 2, 3
FSD-11.9	RAMP LEVEL CEILING	FSD60	38 x 12	EF-2.1	1	OPEN	CLOSED	1	120 VAC	1, 2, 3
FSD-11.10	RAMP LEVEL CEILING	FSD60	48 x 8	EF-2.1	1	OPEN	CLOSED	1	120 VAC	1, 2, 3
FSD-11.11	RAMP LEVEL CEILING	FSD60	38 x 10	EF-2.1	1	OPEN	CLOSED	1	120 VAC	1, 2, 3
FSD-11.12	RAMP LEVEL CEILING	FSD60	38 x 10	EF-2.2	1	OPEN	CLOSED	1	120 VAC	1, 2, 3
FSD-11.13	RAMP LEVEL CEILING	FSD60	48 x 8	EF-2.3	1	OPEN	CLOSED	1	120 VAC	1, 2, 3
FSD-11.14	RAMP LEVEL CEILING	FSD60	38 x 10	EF-2.2	1	OPEN	CLOSED	1	120 VAC	1, 2, 3
FSD-11.15	RAMP LEVEL CEILING	FSD60	28 x 12	HV-1	1	OPEN	CLOSED	1	120 VAC	1, 2, 3
FSD-11.16	RAMP LEVEL CEILING	FSD60	48 x 12	HV-1	1	OPEN	CLOSED	1	120 VAC	1, 2, 3
FSD-11.17	RAMP LEVEL CEILING	FSD60	28 x 12	HV-1	1	OPEN	CLOSED	1	120 VAC	1, 2, 3
FSD-11.18	RAMP LEVEL CEILING	FSD60	60 x 48	AC-11	1	OPEN	CLOSED	2	120 VAC	1, 2, 3
FSD-11.19	RAMP LEVEL CEILING	FSD60	158 x 60	AC-11	1	OPEN	CLOSED	2	120 VAC	1, 2, 3
FSD-11.20	RAMP LEVEL	FSD60	78 x 10	EF-2.5	1	OPEN	CLOSED	1	120 VAC	1, 2, 3
FSD-11.21	RAMP LEVEL ELEC. ROOM	FSD60	24 x 24	EF-2.5	1	OPEN	CLOSED	1	120 VAC	1, 2, 3
FSD-11.22	RAMP LEVEL ELEC. ROOM	FSD60	12 x 24	EF-2.5	1	OPEN	CLOSED	1	120 VAC	1, 2, 3
FSD-11.23	RAMP LEVEL ELEC. ROOM	FSD60	24 x 12	EF-2.5	1	OPEN	CLOSED	1	120 VAC	1, 2, 3
FSD-11.24	PASSENGER LEVEL CEILING	FSD60M	48 x 30	AC-11	1	OPEN	CLOSED	1	120 VAC	1, 2, 3
FSD-11.25	PASSENGER LEVEL CEILING	FSD60M	120 x 30	AC-11	1	OPEN	CLOSED	2	120 VAC	1, 2, 3
FSD-11.26	PASSENGER LEVEL CEILING	FSD60M	60 x 30	AC-11	1	OPEN	CLOSED	1	120 VAC	1, 2, 3
FSD-11.27	PASSENGER LEVEL CEILING	FSD60M	72 x 30	AC-11	1	OPEN	CLOSED	1	120 VAC	1, 2, 3
FSD-11.28	PASSENGER LEVEL CEILING	FSD60M	132 x 18	AC-11	1	OPEN	CLOSED	1	120 VAC	1, 2, 3
FSD-11.29	RAMP LEVEL MER INLET	FSD60M	72 x 42	AC-11	1	OPEN	CLOSED	1	120 VAC	1, 2, 3
FSD-11.30	RAMP LEVEL MER INLET	FSD60M	72 x 42	AC-11	1	OPEN	CLOSED	1	120 VAC	1, 2, 3
FSD-11.31	RAMP LEVEL MER INLET	FSD60M	72 x 42	AC-11	1	OPEN	CLOSED	1	120 VAC	1, 2, 3

1. INTERLOCK TO FIRE ALARM PANEL.
2. PRE-WIRE DAMPER ASSEMBLIES WITH MULTIPLE ACTUATORS TO BE A SINGLE POINT OF CONNECTION FOR POWER AND FIRE ALARM.
3. NUMBER OF ACTUATORS IS BASED ON RUSKIN. PROVIDE ADDITIONAL ACTUATORS AS REQUIRED BY ALTERNATE MANUFACTURERS.

FIRE DAMPER SCHEDULE

BASIS OF DESIGN: RUSKIN

DESIGNATION TYPE	LOCATION	MODEL NO.	DIMENSIONS (IN)	AIR HANDLING SYSTEM No.	LEAKAGE CLASS	FAILED POSITION	POWER SUPPLY	REMARKS
FD-3.1	RAMP LEVEL SA DUCT	DIBD2	24 x 20	AHU-3A	1	CLOSED	120 VAC	-
FD-3.2	RAMP LEVEL RA DUCT	DIBD2	20 x 24	AHU-3A	1	CLOSED	120 VAC	-
FD-44.1	RAMP LEVEL DAR-6	DIBD2	20 x 8	EF-44A	1	CLOSED	120 VAC	-
FD-45.1	RAMP LEVEL DAR-6	DIBD2	20 x 8	EF-45A	1	CLOSED	120 VAC	-
FD-46.1	RAMP LEVEL DAR-3	DIBD2	20 x 8	EF-46A	1	CLOSED	120 VAC	-
FD-46.2	RAMP LEVEL DAR-3	DIBD2	20 x 8	EF-46A	1	CLOSED	120 VAC	-
FD-47.1	RAMP LEVEL DAR-8	DIBD2	16 x 16	EF-47A	1	CLOSED	120 VAC	-
FD-47.2	RAMP LEVEL DAR-8	DIBD2	16 x 16	EF-47A	1	CLOSED	120 VAC	-

AIR CONDITIONING UNIT (PACKAGED) SCHEDULE

UNIT NO.	LOCATION	SERVICE	MIN. OA CFM	FAN TYPE	FAN CFM	FAN ESP	FAN MOTOR HP	FAN VOLTS	FAN PHASE	FAN HERTZ	FILTERS	DX COIL EAT °F DB/WB	DX COIL LAT °F DB/WB	DX COIL REFRIGERANT TYPE	DX COIL TMBH	DX COIL SENS. MBH	DX COIL MAX. FACE VELOCITY (FPM)	DX COIL MAX AIR PD	DX COIL FINS/IN.	DX COIL ROWS
AHU-3A	B2 MER	B2 ETD AREA	-	FC	4,000	0.75	3.0	460	3	60	MERV 8	80/67	52.8/52.1	R-410	148.8	107.8	537	0.89	9	6
AHU-8A	B3 EDT AREA CLG.	B3 ETD AREA	-	FC	2,000	0.75	1.0	460	3	60	MERV 8	80/67	53.7/51.8	R-410	81.8	57.5	500	0.46	11	3
AHU-8B	B3 EDT AREA CLG.	B3 ETD AREA	-	FC	2,000	0.75	1.0	460	3	60	MERV 8	80/67	53.7/51.8	R-410	81.8	57.5	500	0.46	11	3

AIR CONDITIONING UNIT (PACKAGED) SCHEDULE – CONT'D

UNIT NO.	HOT WATER COIL TOTAL MBH	EAT °F DB	LAT °F DB	FINS/IN.	ROWS	MAX AIR PD (In.w.g)	MAX WATER PD (FT/WC)	GPM	EWT	LWT	MAX OPERATING WEIGHT (LBS.)	MANUFACTURERS NAME	MANUFACTURERS MODEL NO.	REMARKS
AHU-3A	120.5	70	123.5	8	1	0.18	5.5	24.0	200	180	450	TRANE OR APP'D EQUAL	TWE120	1
AHU-8A	124.0	70	127.5	14	1	0.13	4.6	13.0	200	180	385	TRANE OR APP'D EQUAL	TWE090	1
AHU-8B	124.0	70	127.5	14	1	0.13	4.6	13.0	200	180	385	TRANE OR APP'D EQUAL	TWE090	1

1. FURNISH AND INSTALL DUCT MOUNTED SMOKE DETECTOR. INTERLOCK DUCT MOUNTED SMOKE DETECTOR WITH FIRE ALARM PANEL.

AIR COOLED CONDENSING UNIT SCHEDULE

UNIT NO.	LOCATION	SERVICE	TYPE	NOMINAL TONS	REFRIGERANT TYPE	REFRIGERANT PIPING O.D. (IN.) LIQUID	REFRIGERANT PIPING O.D. (IN.) GAS/SUCTION	CONDENSER EAT °F DB	MIN. OA TEMP. (°F)	VOLTS	PHASE	HERTZ	MOP	MCA	OPERATING WEIGHT (LBS.)	MANUFACTURERS NAME	MANUFACTURERS MODEL NO.	REMARKS
ACCU-3A	B2 CONC.	B2 ETD AREA	SCROLL	10	R-410	1/2	1-1/8	95	45	460	3	60	25	20.1	550	TRANE OR APP'D EQUAL	TTA120	1,2,3,4
ACCU-8A	B3 CONC.	B3 ETD AREA	SCROLL	6	R-410	1/2	1-1/8	95	38	460	3	60	30	24.1	438	TRANE OR APP'D EQUAL	TTA073	1,2,3,4
ACCU-8B	B3 CONC.	B3 ETD AREA	SCROLL	6	R-410	1/2	1-1/8	95	38	460	3	60	30	24.1	438	TRANE OR APP'D EQUAL	TTA073	1,2,3,4

1. FURNISH AND INSTALL SWEAT ADAPTER KITS.
2. FURNISH AND INSTALL PHENOLIC COATED CONDENSER COILS WITH HIGH EFFICIENCY ALUMINUM PLATE TYPE FINS.
3. MOTORS FOR CONDENSING UNITS SHALL BE TEFC.
4. FURNISH AND INSTALL NEMA 3R DISCONNECT SWITCHES.

HEATING COILS

ZONE NAME	ZONE CFM	COIL QUANT.	ZONE NO.	ZONE MBH	FACE AREA (FT²)	FINS PER INCH	ROWS	EAT °F DB	LAT °F DB	WxH (IN)	EWT °F	LWT °F	AIR P.D. (IN WC)	WATER P.D. (IN WC)	GPM PER ZONE	MANUFACTURER MODEL NUMBER (OR APPROVED EQUAL)	REMARKS
RHC-11.1	29,100	1	1	1085	25.0	7	2	38.0	72.4	60x60	200	179.9	0.40	4.85	111	HEATCRAFT 5WS0802A	COIL SHALL BE MOUNTED ON AC-11
RHC-11.2	22,200	1	2	1044	25.0	11	1	38.0	81.4	60x60	200	178.7	0.27	3.85	100	HEATCRAFT 5WS0702A	COIL SHALL BE MOUNTED ON AC-11
RHC-11.3	28,700	1	3	1303	25.0	7	2	38.0	80.3	60x60	200	178.2	0.49	6.18	129	HEATCRAFT 5WS0802A	COIL SHALL BE MOUNTED ON AC-11
RHC-11.4	6,300	1	4	281	9.2	6	2	38.0	79.1	22x60	200	180.0	0.13	3.19	29	HEATCRAFT 5WQ1101A	COIL SHALL BE MOUNTED ON AC-11

HOT WATER UNIT HEATER SCHEDULE

UNIT NO.	LOCATION	TYPE	OUTPUT MBH	GPM	NOMINAL CFM	MOTOR HP	ELECTRIC VOLTS	ELECTRIC PHASE	ELECTRIC HERTZ	OPERATING WEIGHT (LBS.)	MANUFACTURERS NAME	MANUFACTURERS MODEL NO.	REMARKS
HWUH-1	B2 ETD MER	HORIZONTAL	61.7	7.0	1400	1/20	120	1	60	22	STERLING OR APP'D EQUAL	HS-98	
HWUH-2	B2 ETD MER	HORIZONTAL	61.7	7.0	1400	1/20	120	1	60	22	STERLING OR APP'D EQUAL	HS-98	

DIFFUSER, GRILLE & REGISTER SCHEDULE

SYMBOL	NECK SIZE/ LINEAR LENGTH	SELECTION RANGE (CFM)	SERVICE	MOUNTING	ACCESSORIES	NC OR PRESSURE DROP NOT TO EXCEED	MANUFACTURER MODEL NUMBER (OR APPROVED EQUAL)	REMARKS
A	SEE DWGS	SEE DWGS	SUPPLY	LAY-IN	OBD	40	TITUS TMS	FURNISH AND INSTALL SECTORIZING BAFFLES AS SHOWN ON THE PLAN
B	SEE DWGS	SEE DWGS	RETURN	LAY-IN	N/A	40	TITUS PAR	FURNISH AND INSTALL RETURN BOOT PER DETAIL
C	SEE DWGS	SEE DWGS	RETURN	WALL	N/A	40	TITUS 350RL	-

1. CUSTOM COLOR OF PASSENGER LEVEL DIFFUSERS/GRILLES TO BE SELECTED BY ENGINEER

HOT WATER AIR CURTAIN

UNIT NO.	LOCATION	MOTOR FAN DATA NO.	HP	CFM	HOT WATER COIL DATA COIL AREA (S.F.)	COIL FINS (FPI)	COIL ROWS	AIR SIDE MBH	AIR SIDE EAT (°F)	AIR SIDE LAT (°F)	WATER SIDE GPM	WATER SIDE EWT (°F)	WATER SIDE LWT (°F)	WATER SIDE WPD (FT)	LENGTH (FT)	ELEC. DATA V	Φ	HZ	MANUFACTURER MODEL NUMBER (OR APPROVED EQUAL)	REMARKS
HAC-1.1	RAMP LEVEL OPEN AREA N. DOOR	3	1	12000	11.8	10	2	583	70	115	42	200	172	9.4	16	480	3	60	MARS 144HV-3	DOOR MICROSWITCH AND MOTOR CONTROL PANEL
HAC-1.2	RAMP LEVEL OPEN AREA N. DOOR	3	1	12000	11.8	10	2	583	70	115	42	200	172	9.4	16	480	3	60	MARS 144HV-3	DOOR MICROSWITCH AND MOTOR CONTROL PANEL
HAC-1.3	RAMP LEVEL OPEN AREA S. DOOR	3	1	12000	11.8	10	2	583	70	115	42	200	172	9.4	16	480	3	60	MARS 144HV-3	DOOR MICROSWITCH AND MOTOR CONTROL PANEL
HAC-1.4	RAMP LEVEL OPEN AREA S. DOOR	3	1	12000	11.8	10	2	583	70	115	42	200	172	9.4	16	480	3	60	MARS 144HV-3	DOOR MICROSWITCH AND MOTOR CONTROL PANEL

THE PORT AUTHORITY OF NY & NJ

R.G. VANDERWEIL ENGINEERS, LLP

VAL LEVIN
N.J. Professional Engineer # 24GE04679600

No.	Date	Revision	Approved

ENGINEERING DEPARTMENT

NEWARK LIBERTY INTERNATIONAL AIRPORT

MECHANICAL
HVAC

Title
TERMINAL B
REHABILITATION OF SATELLITE B-2 MECHANICAL AND ELECTRICAL SYSTEMS

SCHEDULES
SHEET 2 OF 4

J. DUMORNE Designed by | J. DUMORNE Drawn by | S. CSONTOS Checked by

Date 05/12/2010

Contract Number EWR-154.081

Drawing Number M502

PID# 08353000

G27508

RUSKIN®
3900 Dr. Greaves Rd. • Kansas City, MO 64030 • (816) 761-7476 • FAX (816) 765-8955

DIBD2 and DIBD23 CURTAIN TYPE DYNAMIC FIRE DAMPERS

1½ AND 3 HOUR UL555 RATED FOR USE IN DYNAMIC AND STATIC SYSTEMS

APPLICATION

DIBD2 fire dampers can be installed vertically in walls or horizontally in floors with fire resistance ratings of less than 3 hours. The DIBD2 carries a 1½ hour UL fire damper label and is classified as a dynamic damper for use in HVAC systems that remain in operation during a fire.

DIBD23 fire dampers can be installed vertically in walls or horizontally in floors with fire resistance ratings of 3 hours or more. The DIBD23 carries a 3 hour UL fire damper label and are classified as a dynamic damper for use in HVAC systems that remain in operation during a fire.

DYNAMIC CLOSURE RATINGS

4000 fpm (20.3 m/s) vertical mount only, up to 24" x 24" (610 x 610).

3000 fpm (15.2 m/s) vertical and horizontal mount, up to 24" x 24" (610 x 610).

2000 fpm (10.2 m/s) vertical or horizontal mount on all sizes.

4 in. w.g. (1kPa) maximum pressure on all sizes.

STANDARD CONSTRUCTION

FRAME
20 gage (1.0) galvanized, steel channel.

BLADES
24 gage (.7) galvanized curtain type.

CLOSURE SPRINGS
301 stainless steel constant force or spring clip type.

FUSIBLE LINK
165°F (74°C) is standard. 212°F (100°C) and 285°F (141°C) are available.

DAMPER SIZES

The sizes listed below are for A Style dampers. Refer to pages 2 and 3 for sizes of other style dampers.

MINIMUM SIZE
Vertical Installation – 4"w x 4"h (102 x 102)
Horizontal Installation – 6"w x 6"h (152 x 152) for dampers no larger than 24"w or 24"h (610 or 610). Dampers larger than 24"w or 24"h (610 or 610) have a minimum size of 10"w or 10"h (254 or 254).

MAXIMUM SIZE
Single Section
Vertical Installation – 33"w x 36"h (838 x 914)
Horizontal Installation – 24"w x 24"h (610 x 610)
Multiple Section
Vertical Installation – 72"w x 48"h (1829 x 1219), 48"w x 72"h (1219 x 1829) or 120"w x 24"h (3048 x 610)**
**90"w x 24"h (2286 x 610) for DIBD23
Horizontal Installation – 36"w x 48"h (914 x 1219)

OPTIONS

- **FM Approvals** as Specification Tested Product.
- **Switch Package** to remotely indicate damper blade position.
- **FAST Angle** for one side angle installations.
- **G Style** for grille applications.
- **GA, Grille Access Type** for out of the wall/floor and no angle grille applications.
- **OW, Out of Wall Type** for out of wall/floor installations.
- **Sleeve** of various lengths and gages to insure field compliance with UL installation requirements.
- **Access Door** factory mounted in common sleeve to ensure compliance with UL installation requirements.

NOTE: Dimensions shown in parentheses ( ) indicate millimeters.

Models DIBD2 and DIBD23 meet the requirements for fire dampers established by:

- **National Fire Protection Association** NFPA Standards 80, 90A and 101
- **ICC International Building Codes**
- **CSFM California State Fire Marshal** Fire Damper Listing (#3225-245:005 and #3225-245:004)
- **New York City** (BSA Listing #297-71-SA and #298-85-SA)

UL CLASSIFIED
UL555 Listing R5531

SEE COMPLETE MARKING ON PRODUCT

FM Approvals
Specification Tested Product (Option)

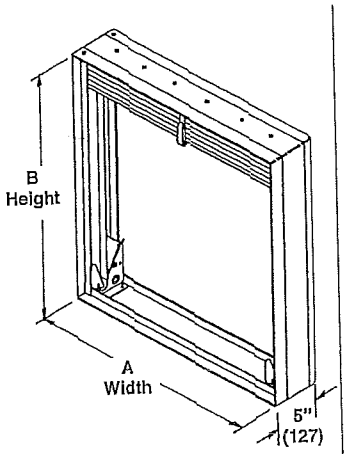

A STYLE FRAME AND BLADES IN AIRSTREAM

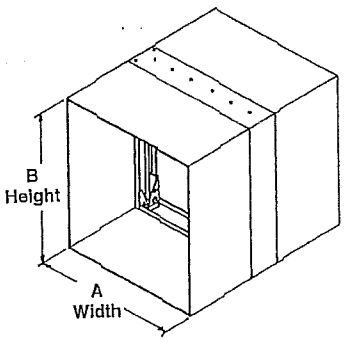

Taped and sealed on vertical sizes up to 33"w x 36"h (838 x 914) and horizontal sizes up to 24"w x 24"h (610 x 610).

DIBD2 OR 23 STYLE A IN 20 GAGE FACTORY SLEEVE

ALL STATED SPECIFICATIONS ARE SUBJECT TO CHANGE WITHOUT NOTICE OR OBLIGATION. ©Ruskin 2009

DAMPER STYLES AND SIZES

"B" Style – Blades out of airstream for high free area applications

MINIMUM SIZE
Vertical Installation – 4"w x 4"h (102 x 102)
Horizontal Installation – 6"w x 4"h (152 x 102) for dampers no larger than 24"w or 21"h (610 or 533). Dampers larger than 24"w or 21"h (610 or 533) have a minimum size of 10"w or 8"h (254 or 203)

MAXIMUM SIZE
Single Section
Vertical Installation – 33"w x 32"h (838 x 813)
Horizontal Installation – 24"w x 21"h (610 x 533)
Multiple Section
Vertical Installation – 72"w x 45"h (1829 x 1143), 48"w x 69"h (1219 x 1753) or 120"w x 21"h (3048 x 533)**
**90"w x 21"h (2286 x 533) for DIBD23
Horizontal Installation – 36"w x 42"h (914 x 1067)

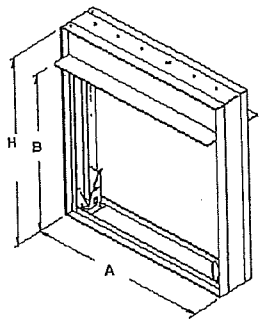

Taped and sealed on vertical sizes up to 33"w x 32"h (838 x 813) and horizontal sizes up to 24"w x 21"h (610 x 533).

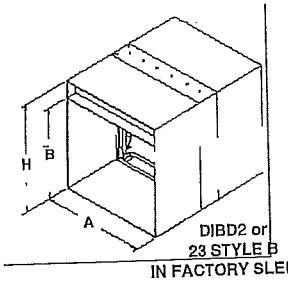

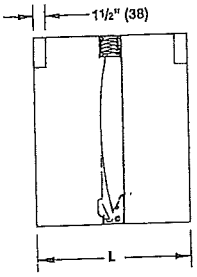

A = Duct Width B = Duct Height H = Overall Damper Height L = Sleeve Length

"BC" Style – Welded "B" style for high pressure, high free area applications

MINIMUM SIZE
Vertical Installation – 4"w x 4"h (102 x 102)
Horizontal Installation – 6"w x 4"h (152 x 102) for dampers no larger than 24"w or 21"h (610 or 533). Dampers larger than 24"w or 21"h (610 or 533) have a minimum size of 10"w or 8"h (254 or 203).

MAXIMUM SIZE
Single Section
Vertical Installation – 33"w x 32"h (838 x 813)
Horizontal Installation – 24"w x 21"h (610 x 533)
Multiple Section
Vertical Installation – 72"w x 45"h (1829 x 1143), 48"w x 69"h (1219 x 1753) or 120"w x 21"h (3048 x 533)**
**90"w x 21"h (2686 x 533) for DIBD23
Horizontal Installation – 36"w x 42"h (914 x 1067)

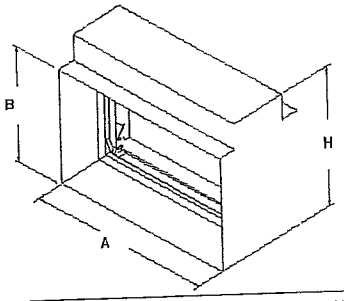

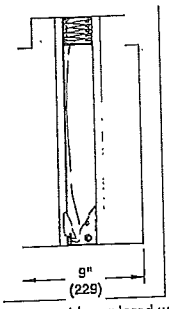

Damper must be ordered with minimum 18 gage (1.2) x 9" (229) factory sleeve.

A = Duct Width B = Duct Height H = Overall Damper Height

C and WC Style – Sealed (C) or welded (WC) square or rectangular transition for maximum free area applications

MINIMUM SIZE
Vertical Installation – 4"w x 3"h (102 x 76)
Horizontal Installation – 4"w x 3"h (102 x 76) for dampers no larger than 22"w or 20"h (559 or 508). Dampers larger than 22"w or 20"h (559 or 508) have a minimum size of 8"w or 7"h (203 or 178).

MAXIMUM SIZE
Single Section
Vertical Installation – 31"w x 31"h (787 x 787)
Horizontal Installation – 22"w x 20"h (559 x 508)
Multiple Section
Vertical Installation – 70"w x 44"h (1778 x 1118), 46"w x 68"h (1168 x 1727) or 118"w x 20"h (2997 x 508)**
**88"w x 20"h (2235 x 508) for DIBD23
Horizontal Installation
34"w x 42"h (864 x 1067)

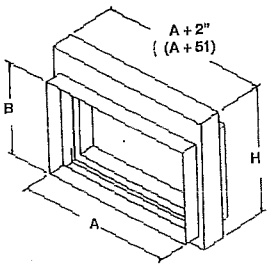

Taped and sealed on sizes up to 31"w x 31"h (787 x 787) for vertical installation and 22"w x 20"h (559 x 508) for horizontal installation.

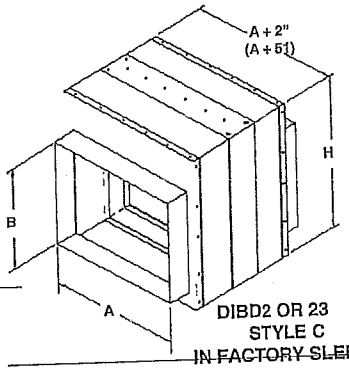

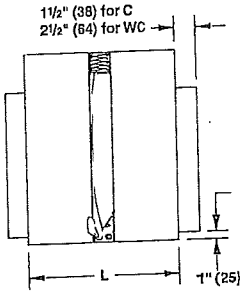

A = Duct Width B = Duct Height H = Overall Damper Height L = Sleeve Length

CR and WR Style – Sealed (CR) or welded (WR) round transition for 100% free area applications

MINIMUM SIZE
Vertical Installation – 3" (76) diameter
Horizontal Installation – 4" (102) diameter

MAXIMUM SIZE
Vertical Installation
Single Section – 31" (787) diameter
Multiple Sections – 44" (1118) diameter
Horizontal Installation
Single Section – 20" (508) diameter
Multiple Sections – 34" (864) diameter

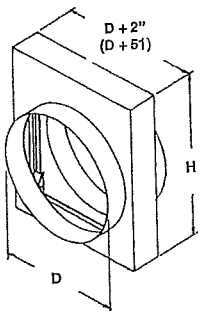

Taped and sealed on sizes up to 31" (787) in diameter for vertical installation and 20" (508) in diameter for horizontal installation.

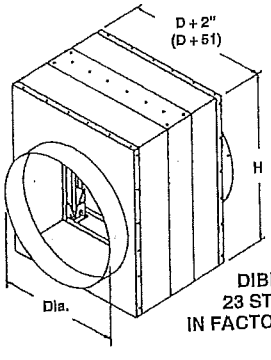

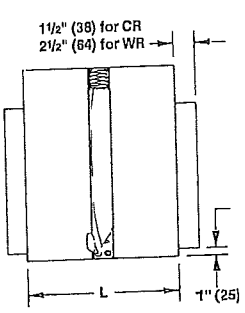

D = Diameter H = Overall Damper Height L = Sleeve Length

DAMPER STYLES AND SIZES

CO and WO Style – Sealed (CO) or welded (WO) oval transition for 100% free area applications

MINIMUM SIZE
- Vertical Installation – 4"w x 3"h (102 x 76)
- Horizontal Installation – 4"w x 3"h (102 x 76) for dampers no larger than 22"w or 20"h (559 or 508). Dampers larger than 22"w or 20"h (559 or 508) have a minimum size of 8"w or 7"h (203 or 178).

MAXIMUM SIZE
- Vertical Installation
  - Single Section – 31"w x 31"h (787 x 787)
  - Multiple Sections – 70"w x 44"h (1778 x 1118), 46"w x 68"h (1168 x 1727) or 118"w x 20"h (2997 x 508)**
  - **88"w x 20"h (2235 x 508) for DIBD23
- Horizontal Installation
  - Single Section – 22"w x 20"h (559 x 508)
  - Multiple Sections – 34"w x 42"h (864 x 1067)

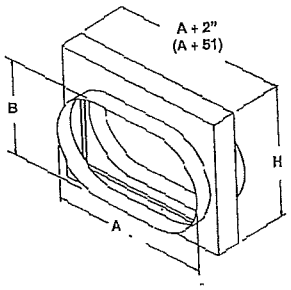

A = Duct Width B = Duct Height H = Overall Damper Height L = Sleeve Length

Taped and sealed on sizes up to 31"w x 31"h (787 x 787) for vertical installation and 22"w x 20"h (559 x 508) for horizontal installation.

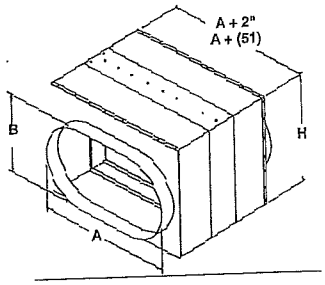

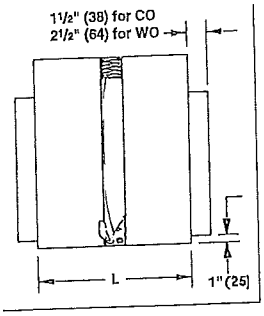

DIBD2 OR 23 STYLE CO IN FACTORY SLEEVE

LO, LR and R Style – Non-sealed oval (LO) or round (LR, R) transitions for low pressure applications. LO and LR transitions offset for 100% free area applications. R transition centered for use when 100% free area not required.

MINIMUM SIZE
- Vertical Installation
  - LR, R Styles – 3" (76) diameter
  - LO Style – 4"w x 3"h (102 x 76)
- Horizontal Installation
  - LR, R Styles – 4" (102) diameter
  - LO Style – 4"w x 3"h (102 x 76)

MAXIMUM SIZE
- Vertical Installation
  - LR, R Styles – 31" (787) diameter
  - LO Style – 31"w x 31"h (787 x 787)
- Horizontal Installation
  - LR, R Styles – 20" (508) diameter
  - LO Style – 22"w x 20"h (559 x 508)

STYLE LO

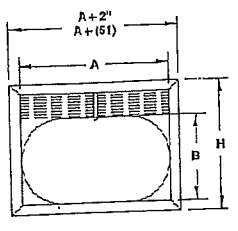

STYLE R

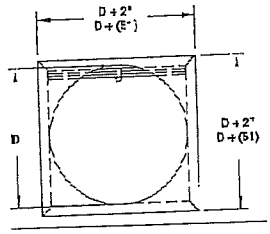

STYLE LR

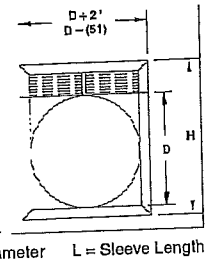

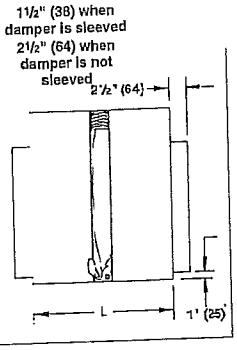

A = Duct Width B = Duct Height H = Overall Damper Height D = Diameter L = Sleeve Length

ASSEMBLY AND DIMENSIONAL INFORMATION

Dampers normally fabricated approximately 1/4" (6) less than given duct dimensions. A (width) and B (height) dimensions shown describe maximum UL Classified sizes. Ruskin recommends the authority having jurisdiction, the engineer and the contractor agree on the installation design prior to installation.
DIBD2 and DIBD23 multiple section dampers ordered without sleeves are shipped in individual sections, for field assembly.
DIBD2 and DIBD23 multiple section dampers ordered with factory furnished sleeves are normally shipped in complete assemblies.
If TDF or other flanged breakaway connections are to be used, order dampers with factory furnished sleeves actual size.

A STYLE DAMPERS

VERTICAL INSTALLATION

Important Note: Dampers larger than 33" x 36" (838 x 914) are multiple section dampers consisting of equal sections no larger than 24" x 24" (610 x 610).

Single Section Dampers

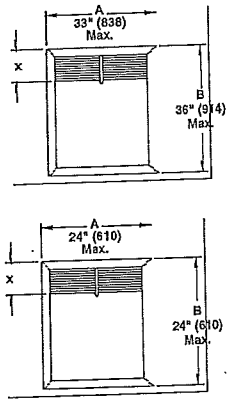

Multiple Section Dampers

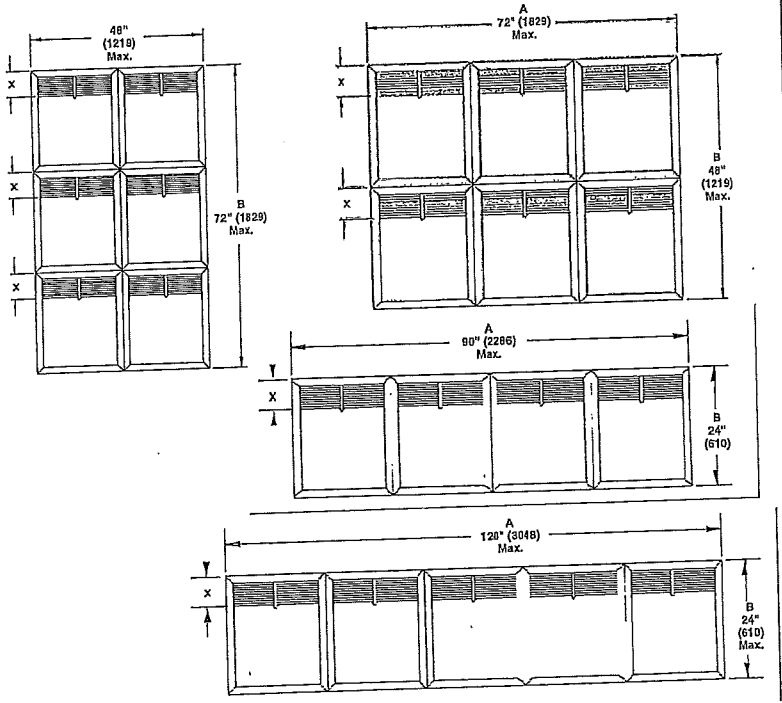

		Blade Dimensions	
B		X	
6	(152)	1 1/2	(38)
7	(178)	1 1/2	(38)
8	(203)	1 3/4	(44)
9	(229)	1 3/4	(44)
10	(254)	1 3/4	(44)
11	(279)	2	(51)
12	(305)	2	(51)
13	(330)	2 3/8	(60)
14	(356)	2 3/8	(60)
15	(381)	2 5/8	(67)
16	(406)	2 5/8	(67)
17	(432)	2 5/8	(67)
18	(457)	2 3/4	(70)
19	(483)	2 3/4	(70)
20	(508)	3 1/4	(83)
21	(533)	3 1/4	(83)
22	(559)	3 1/2	(89)
23	(584)	3 1/2	(89)
24	(610)	3 1/2	(89)
25	(635)	3	(76)
26	(660)	3	(76)
27	(686)	3 1/4	(83)
28	(711)	3 1/4	(83)
29	(737)	3 1/2	(89)
30	(762)	3 1/2	(89)
31	(787)	3 1/2	(89)
32	(813)	3 5/8	(92)
33	(838)	3 5/8	(92)
34	(864)	3 7/8	(98)
35	(889)	3 7/8	(98)
36	(914)	4	(102)

Dimensions shown in parentheses ( ) indicate millimeters.

HORIZONTAL INSTALLATION

Important Note: Dampers larger than 33" x 36" (838 x 914) are multiple section dampers consisting of equal sections no larger than 24" x 24" (610 x 610).

Single Section Dampers

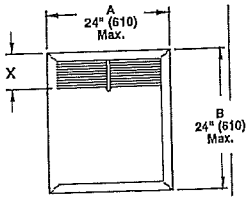

Multiple Section Dampers

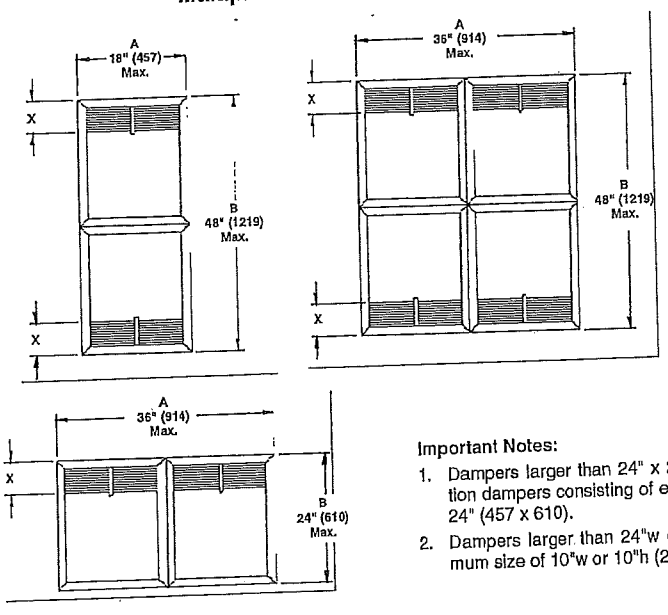

		Blade Dimensions	
B		X	
6	(152)	1 1/2	(38)
7	(178)	1 1/2	(38)
8	(203)	1 3/4	(44)
9	(229)	1 3/4	(44)
10	(254)	1 3/4	(44)
11	(279)	2	(51)
12	(305)	2	(51)
13	(330)	2	(51)
14	(356)	2	(51)
15	(381)	2 3/8	(60)
16	(406)	2 3/8	(60)
17	(432)	2 3/8	(60)
18	(457)	2 5/8	(67)
19	(483)	2 5/8	(67)
20	(508)	2 3/4	(70)
21	(533)	2 3/4	(70)
22	(559)	3	(76)
23	(584)	3	(76)
24	(610)	3	(76)

Dimensions shown in parentheses ( ) indicate millimeters.

Important Notes:

1. Dampers larger than 24" x 24" (610 x 610) are multiple section dampers consisting of equal sections no larger than 18" x 24" (457 x 610).
2. Dampers larger than 24"w or 24"h (610 x 610) have a minimum size of 10"w or 10"h (254 x 254).

B AND BC STYLE DAMPERS

VERTICAL INSTALLATION

Single Section Dampers

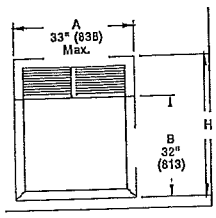

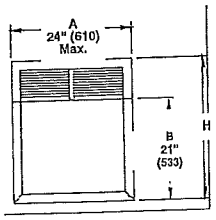

B	H	H For dampers larger than 24" (610) W
4 (102)	5¾ (146)	
5 (127)	6¾ (171)	
6 (152)	7¾ (197)	
7 (178)	8¾ (222)	
8 (203)	9¾ (248)	
9 (229)	11¾ (298)	10¾ (273)
10 (254)	12¾ (324)	11¾ (298)
11 (279)	13¾ (349)	
12 (305)	14¾ (375)	
13 (330)	15¾ (400)	
14 (356)	16¾ (425)	
15 (381)	17¾ (451)	
16 (406)	18¾ (476)	
17 (432)	20¾ (527)	19¾ (502)
18 (457)	21¾ (552)	20¾ (527)
19 (483)	22¾ (578)	21¾ (552)
20 (508)	23¾ (603)	22¾ (578)
21 (533)	23¾ (603)	
22 (559)	25¾ (654)	
23 (584)	26¾ (679)	
24 (610)	27¾ (705)	
25 (635)	28¾ (730)	
26 (660)	29¾ (756)	
27 (686)	30¾ (781)	
28 (711)	31¾ (806)	
29 (737)	32¾ (832)	
30 (762)	33¾ (857)	
31 (787)	34¾ (883)	
32 (813)	35¾ (908)	

Multiple Section Dampers

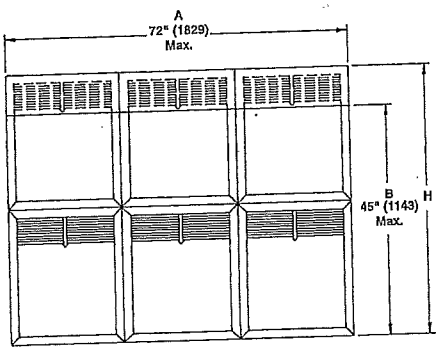

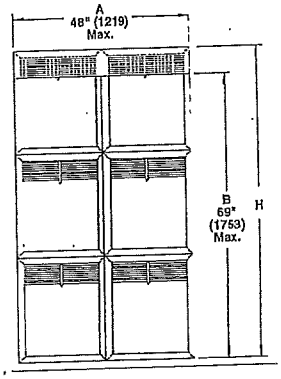

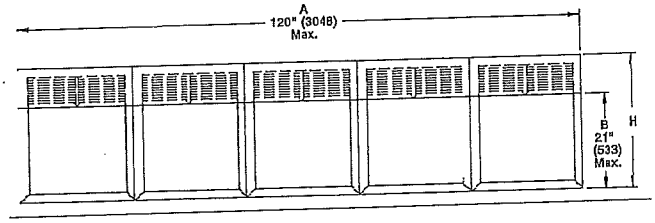

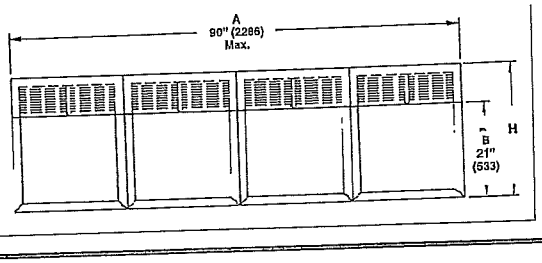

Important Note:

Dampers larger than 33" x 32" (838 x 813) are multiple section dampers consisting of equal sections no larger than 24" x 24" (610 x 610) overall.

To determine the overall height (H dimension) of double high and triple high damper assemblies: Add 2¾" (70) to the B dimension. For example, a 24" (610) double high assembly is 26¾" (679) overall height. A 65" (1651) triple high assembly is 67¾" (1721) overall height. The bottom sections on double and triple high assemblies are Style A dampers.

Dimensions shown in parentheses ( ) indicate millimeters.

HORIZONTAL INSTALLATION

Single Section Dampers

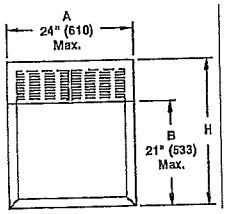

B		H	
4	(102)	5¾	(146)
5	(127)	6¾	(171)
6	(152)	7¾	(197)
7	(178)	8¾	(222)
8	(203)	10¾	(273)
9	(229)	11¾	(298)
10	(254)	12¾	(324)
11	(279)	13¾	(349)
12	(305)	14¾	(375)
13	(330)	15¾	(400)
14	(356)	16¾	(425)
15	(381)	17¾	(451)
16	(406)	18¾	(476)
17	(432)	19¾	(502)
18	(457)	20¾	(527)
19	(483)	21¾	(552)
20	(508)	22¾	(578)
21	(533)	23¾	(603)

Multiple Section Dampers

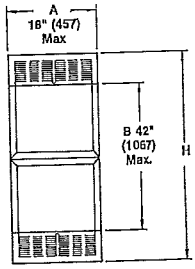

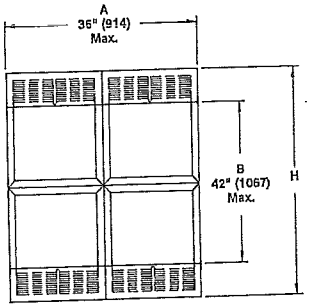

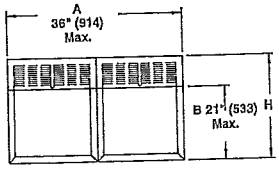

Important Notes:

1. Dampers larger than 24" x 21" (610 x 533) are multiple section dampers consisting of equal sections no larger than 18" x 24" (457 x 610) overall.
2. Dampers larger than 24"w or 21"h (610 x 533) have a minimum size of 10"w or 8"h (254 x 203).

To determine the overall height (H dimension) of double high damper assemblies: Add 3½" (89) to B dimension on dampers over 21" (533) through 24" (610) and 5½" (140) on all other dampers. For example, a damper with a 28" (711) B dimension has an overall H dimension of 33½" (851).

Dimensions shown in parentheses ( ) indicate millimeters.

VERTICAL INSTALLATION

Single Section Dampers

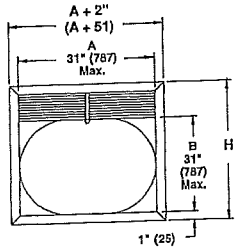

Important Note: Dampers larger than 31" x 31" (787 x 787) are multiple section dampers consisting of equal sections no larger than 24" x 24" (610 x 610) overall.

To determine the overall height (H dimension) of double high and triple high damper assemblies: Add 3¾" (95) to the B dimension. For example, a 24" (610) double high assembly is 27¾" (705) overall height. A 64" (1626) triple high assembly is 67¾" (1721) overall height. The bottom sections on double and triple high assemblies are Style A dampers with blades in the air stream.

Multiple Section Dampers

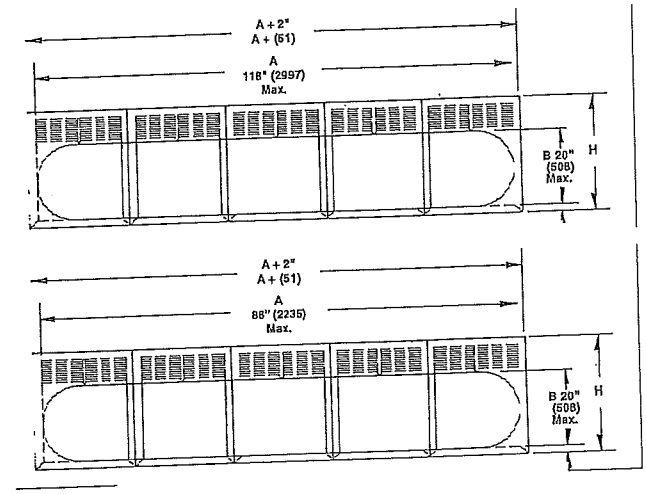

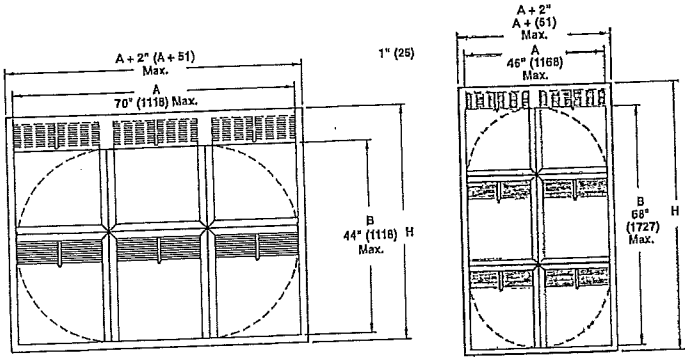

B		H	
3	(76)	5¾	(146)
4	(102)	6¾	(171)
5	(127)	7¾	(197)
6	(152)	8¾	(222)
7	(178)	9¾	(248)
8	(203)	11¾	(298)
9	(229)	12¾	(324)
10	(254)	13¾	(349)
11	(279)	14¾	(375)
12	(305)	15¾	(400)
13	(330)	16¾	(425)
14	(356)	17¾	(451)
15	(381)	18¾	(476)
16	(406)	20¾	(527)
17	(432)	21¾	(552)
18	(457)	22¾	(578)
19	(483)	23¾	(603)
20	(508)	23¾	(603)
21	(533)	25¾	(654)
22	(559)	26¾	(679)
23	(584)	27¾	(705)
24	(610)	28¾	(730)
25	(635)	29¾	(756)
26	(660)	30¾	(781)
27	(686)	31¾	(806)
28	(711)	32¾	(832)
29	(737)	33¾	(857)
30	(762)	34¾	(883)
31	(787)	35¾	(908)

Dimensions shown in parentheses ( ) indicate millimeters.

HORIZONTAL INSTALLATION

Single Section Dampers

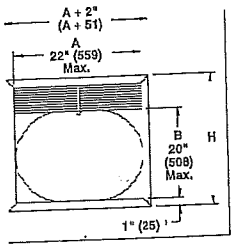

Important Notes:

1. Dampers larger than 22" x 20" (559 x 508) are multiple section dampers consisting of equal sections no larger than 18" x 24" (457 x 610) overall.
2. Dampers larger than 22"w or 20"h (559 x 508) have a minimum size of 8"w or 7"h (203 x 178).

To determine the overall height (H dimension) of double high damper assemblies: Add 3½" (89) to B dimension on dampers over 20" (508) through 24" (610) and 5½" (140) to the B dimension on all other dampers. For example, a 24" (610) double high assembly is 27½" (699) overall height. A 40" (1616) double high assembly is 45½" (1156) overall height.

Multiple Section Dampers

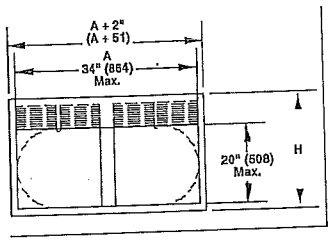

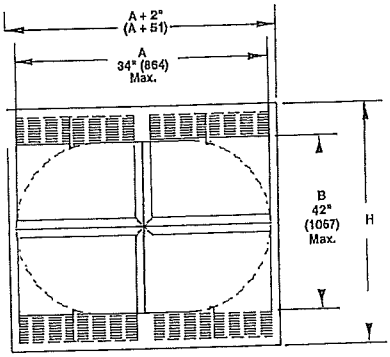

B		H	
3	(76)	5¾	(146)
4	(102)	6¾	(171)
5	(127)	7¾	(197)
6	(152)	8¾	(222)
7	(178)	10¾	(273)
8	(203)	11¾	(298)
9	(229)	12¾	(324)
10	(254)	13¾	(349)
11	(279)	14¾	(375)
12	(305)	15¾	(400)
13	(330)	16¾	(425)
14	(356)	17¾	(451)
15	(381)	18¾	(476)
16	(406)	19¾	(502)
17	(432)	20¾	(527)
18	(457)	21¾	(552)
19	(483)	22¾	(578)
20	(508)	23¾	(603)

Dimensions shown in parentheses ( ) indicate millimeters.

CR, WR AND LR STYLE DAMPERS

VERTICAL INSTALLATION

Single Section Dampers

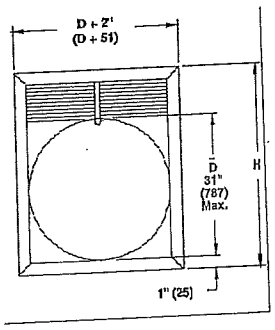

Important Note: Dampers larger than 31" (787) diameter are multiple section dampers consisting of equal sections no larger than 24" x 24" (610 x 610) overall.

To determine the overall height (H dimension) of double high damper assemblies: Add 3¾" (95) to D dimension on dampers. For example, a 40" (1016) double high assembly is 43¾" (1111) overall height. The bottom sections on double high assemblies are Style A dampers with blades in the air stream.

Multiple Section Dampers

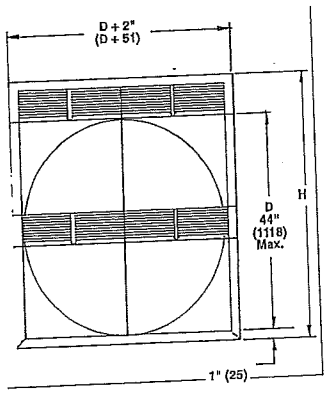

B		H	
3	(76)	5¾	(146)
4	(102)	6¾	(171)
5	(127)	7¾	(197)
6	(152)	8¾	(222)
7	(178)	9¾	(248)
8	(203)	11¾	(298)
9	(229)	12¾	(324)
10	(254)	13¾	(349)
11	(279)	14¾	(375)
12	(305)	15¾	(400)
13	(330)	16¾	(425)
14	(356)	17¾	(451)
15	(381)	18¾	(476)
16	(406)	20¾	(527)
17	(432)	21¾	(552)
18	(457)	22¾	(578)
19	(483)	23¾	(603)
20	(508)	23¾	(603)
21	(533)	25¾	(654)
22	(559)	26¾	(679)
23	(584)	27¾	(705)
24	(610)	28¾	(730)
25	(635)	29¾	(756)
26	(660)	30¾	(781)
27	(686)	31¾	(806)
28	(711)	32¾	(832)
29	(737)	33¾	(857)
30	(762)	34¾	(883)
31	(787)	35¾	(908)

Dimensions shown in parentheses ( ) indicate millimeters.

HORIZONTAL INSTALLATION

Single Section Dampers

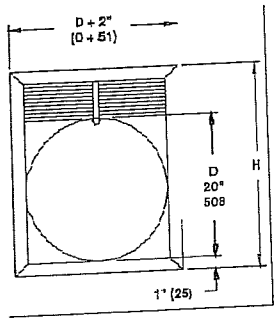

Important Note: Dampers larger than 20" (508) diameter are multiple section dampers consisting of equal sections no larger than 18" x 24" (457 x 610) overall.

To determine the overall height (H dimension) of double high damper assemblies: Add 3½" (89) to D dimension on dampers over 20" (508) through 25" (635) and 5½" (140) on all other sizes. For example, a 24" (610) double high assembly is 27½" (699) overall height.

Multiple Section Dampers

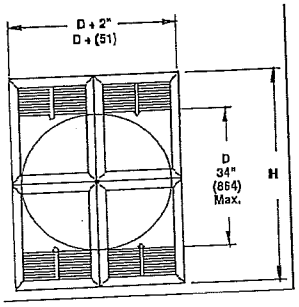

B		H	
3	(76)	5¾	(146)
4	(102)	6¾	(171)
5	(127)	7¾	(197)
6	(152)	8¾	(222)
7	(178)	10¾	(273)
8	(203)	11¾	(298)
9	(229)	12¾	(324)
10	(254)	13¾	(349)
11	(279)	14¾	(375)
12	(305)	15¾	(400)
13	(330)	16¾	(426)
14	(356)	17¾	(451)
15	(381)	18¾	(476)
16	(406)	19¾	(502)
17	(432)	20¾	(527)
18	(457)	21¾	(552)
19	(483)	22¾	(578)
20	(508)	23¾	(603)

Dimensions shown in parentheses ( ) indicate millimeters.

LABOR SAVER OPTIONS

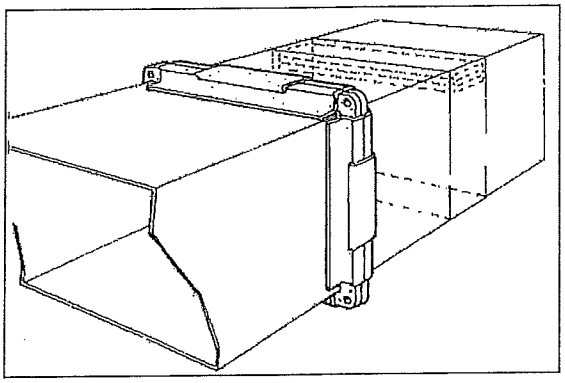

TDF OR DUCTMATE BREAKAWAY CONNECTIONS

Meet UL breakaway connection requirements without changing connectors. Ruskin fire dampers can be installed using non-matched flange connections for the breakaway requirement. Any flange connection can mate to a different type or model on Ruskin fire dampers.

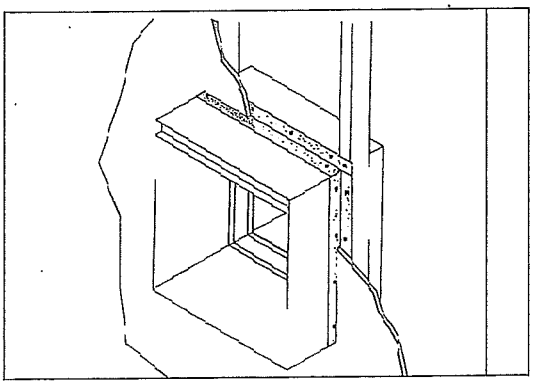

FAST MOUNTING ANGLE

FAST mounting angles are used in lieu of conventional, eight piece mounting angles and are installed on only one side of the wall when used with Ruskin DIBD2 fire dampers. The FAST angle can be fastened directly to the metal stud underneath the fire rated gypsum wallboard.

LEED 2009 Information

VOC Content (g/l) - 0

Manufacturing Locations (MR Credit 5.1)
Mira Loma, CA 91752
Parsons, KS 67357
Lexington, KY 40509
Fairmont, WV 26554

Recycled Content (MR Credit 4.1 & 4.2)
7.5% Post Consumer
7.5% Pre-Consumer Post Industrial

Approximate Damper Assembly Weight
6 lbs. per sq. ft. without sleeves
10 lbs. per sq. ft. with 12" 20 ga. sleeves

SUGGESTED SPECIFICATION FOR DIBD2

Furnish and install, at locations shown on the plans, dynamic fire dampers tested, constructed and labeled in accordance with the latest edition of UL Standard 555. Dampers shall have a fire rating of 1½ hours and shall meet the requirements of the latest edition of NFPA90A.

Each damper shall include a 165°F (74°C) or 212°F (100°C) fusible link (***specifier select***) and shall be labeled for use in dynamic systems. Dampers labeled for use in static systems only are not permitted. The damper shall be rated for dynamic closure at 2000 fpm (10.16 m/s) and 4 inches w.g. (1 kPa) static pressure and shall be rated to close with airflow in either direction.

Each dynamic fire damper shall include a steel sleeve and mounting angles furnished by the damper manufacturer to ensure appropriate installation. Submittal information shall include the fire protection rating, maximum velocity/pressure ratings and the manufacturer's UL installation instructions. The dampers shall be installed in accordance with the manufacturer's UL installation instructions. Dynamic fire dampers shall be curtain type Ruskin model DIBD2.

SUGGESTED SPECIFICATION FOR DIBD23

Furnish and install, at locations shown on the plans, dynamic fire dampers tested, constructed and labeled in accordance with the latest edition of UL Standard 555. Dampers shall have a fire rating of 3 hours and shall meet the requirements of the latest edition of NFPA90A.

Each damper shall include a 165°F (74°C) or 212°F (100°C) fusible link (***specifier select***) and shall be labeled for use in dynamic systems. Dampers labeled for use in static systems only are not permitted. The damper shall be rated for dynamic closure to a minimum 2000 fpm (10.16 m/s) and 4 inches w.g. (1 kPa) static pressure and shall be rated to close with airflow in either direction.

Each dynamic fire damper shall include a steel sleeve and mounting angles furnished by the damper manufacturer to ensure appropriate installation. Submittal information shall include the fire protection rating, maximum velocity/pressure ratings and the manufacturer's UL installation instructions. The dampers shall be installed in accordance with the manufacturer's UL installation instructions. Dynamic fire dampers shall be curtain type Ruskin model DIBD23.

RUSKIN®
3900 Dr. Greaves Rd.
Kansas City, MO 64030
(816) 761-7476
FAX (816) 765-8955
www.ruskin.com

Printed on recycled paper
using vegetable based inks
30%

Honeywell

MS4209F, MS4309F, MS4709F, MS4809F, MS8209F, MS8309F Fast-Acting, Two-Position Actuators

FOR FIRE/SMOKE CONTROL APPLICATIONS

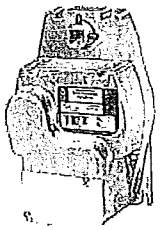

SPECIFICATION DATA

The MS4209F, MS4309F, MS4709F, MS4809F, MS8209F, MS8309F Fast-Acting, Two-Position Actuators are spring return direct coupled actuators (DCA) with an integral junction box for on/off damper control. The actuator accepts an on/off signal from a single-pole, single-throw (spst) controller. Models are available with clockwise (cw) or counterclockwise (ccw) spring return and are designed to operate reliably in smoke control systems requiring Underwriter's Laboratories Inc. UL555S ratings up to 350°F.

SPECIFICATIONS

Models:

Model	Spring Return Direction	Voltage in Vac	Torque in lb-in. (N•m)
MS4209F	cw	120	80 (9)
MS4309F	ccw		
MS4709F	cw	230	
MS4809F	ccw		
MS8209F	cw	24	
MS8309F	ccw		

Electrical Ratings:
- ❑ Power Input:
  - ❑ MS4209, MS4309: 120 Vac +10%, -15%, 60 Hz.
  - ❑ MS4709, MS4809: 230 Vac ±10%, 50/60 Hz.
  - ❑ MS8209, MS8309: 24 Vac +20%, -10%, 50/60 Hz.
- ❑ Power Consumption (at Rated Voltage):
  - ❑ MS4209, MS4309: Holding: 0.13A, 7W. Running (at 80 lb-in.): 0.25A, 23W.
  - ❑ MS4709, MS4809: Holding: 0.09A, 7W. Running (at 80 lb-in.): 0.13A, 23W.
  - ❑ MS8209, MS8309: Holding: 7 VA. Running (at 80 lb-in.): 23 VA.

Electrical Connections:
- ❑ MS4209, MS4309, MS8209, MS8309: Two color coded 16 in. leads.
- ❑ MS4709, MS4809: 1m appliance cable.
- ❑ Ground screw.
- ❑ Three 7/8 in. conduit connection holes (fittings not included).

Controller Type:
- ❑ MS4209, MS4309: Line voltage (120 Vac), two-position, spst (Series 40).
- ❑ MS4709, MS4809: Line voltage (230 Vac), two-position, spst (Series 40).
- ❑ MS8209, MS8309: Low voltage (24 Vac), two-position, spst (Series 80).

Device Weight:
- ❑ 5 lb (2.3 kg).

Temperature Ratings:
- ❑ Ambient: 0°F to 130°F (-18°C to 55°C).
- ❑ Shipping and Storage: -40°F to 140°F (-40°C to 60°C).

Humidity Rating:
- ❑ 5% to 95% RH noncondensing.

FEATURES

- **80 lb-in. (9 N•m) minimum driving torque at 350°F (176°C).**
- **Integral spring return ensures level of return torque.**
- **Stainless steel internal spring.**
- **Fifteen-second spring return timing.**
- **No special cycling required during long-term holding.**
- **No audible noise during holding.**
- **Patent pending design eliminates need for limit switches to reduce power consumption.**
- **Models available for 24, 120, and 230 Vac.**
- **Ninety-five degree angle of rotation.**
- **Actuator holds rated torque at reduced power level.**
- **Die-cast aluminum housing.**
- **Housing design allows flush mounting to damper.**
- **Integral junction box with three conduit openings eliminates need for separate wiring box.**
- **High-temperature indicator included.**

IMPORTANT
- *The actuator is designed to meet UL555S standards at 350°F (176°C). The actuator must be tested with the damper to achieve this rating.*
- *Honeywell does not recommend using linkages with these actuators because side-loading of the output hub reduces actuator life.*

Stroke:
- ❑ 95° ± 3°, mechanically limited.

Torque Rating (at Rated Voltage):
- ❑ Typical Holding (0°F to 350°F): 80 lb-in. (9 N•m).
- ❑ Typical Driving (0°F to 350°F): 80 lb-in. (9 N•m).
- ❑ Spring Return: 80 lb-in. (9 N•m).
- ❑ Stall Maximum: 240 lb-in. (27 N•m).

Noise Ratings (Maximum):
- ❑ Driving Open: 80 dBA at 1m.
- ❑ Holding: 20 dBA at 1m (no audible noise).

Timing (at Rated Torque and Voltage):
- ❑ Drive Open:
  - ❑ Ambient Conditions: 25 sec maximum, 14 sec typical.
  - ❑ At 350°F: 75 sec maximum.
- ❑ Spring Close: 20 sec maximum.

Design Life (at Rated Voltage):
- ❑ 60,000 full stroke cycles.

Minimum Damper Shaft Length:
- ❑ 1-1/2 in. (38 mm).

Cycling Requirements:

- ☐ Prolonged holding-period (1 year) testing of these actuators has been performed with no spring return failures. The actuator and the internal spring are designed to require no special cycling during long-term holding.
- ☐ Honeywell recommends following all local, state and national codes for periodic testing of the entire smoke control system. Refer to National Fire Protection Association (NFPA) National Fire Codes®: NFPA90A, NFPA92A and NFPA92B for your application.
- ☐ NFPA recommends periodic examination of each fire/smoke damper (semi-annually or annually) to ensure proper performance.

Mounting:

- ☐ 3/8 to 1/2 in. square or round damper shafts.
- ☐ The actuator can be mounted with shaft in any position.
- ☐ Secure hub to shaft with:
  - ☐ MS4709, MS4809: Four 3 mm set screws. Use 3 mm Allen wrench to tighten set screws.
  - ☐ MS4209, MS4309, MS8209, MS8309: 1/4-28 UNF set screws. Use 1/8 Allen wrench to tighten set screws.

Environmental Protection Ratings:

	MS4209, MS4309	MS4709, MS4809, MS8209, MS8309
NEMA1	X	X
IP54		X

Approvals:

	MS4209, MS4309	MS4709, MS4809, MS8209, MS8309
L/cUL	X	X
UL873 Plenum Rating, File No. E4436; Guide No. XAPX	X	X
CE		X
C-TICK		X

Accessories (not supplied with actuator):

- ☐ 201391 Shaft Adapter for 3/8 in. shafts.
- ☐ 205649 Mounting Bracket.
- ☐ 32003532-002 Dual Auxiliary Switch Package for UL555(S) applications.

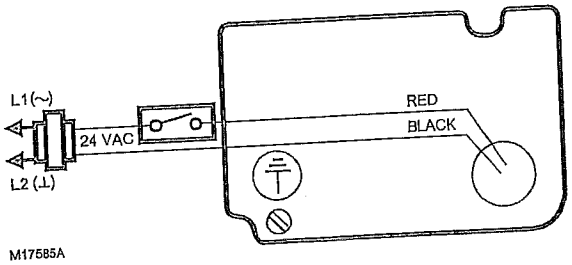

Fig. 1. Typical 24 Vac wiring.

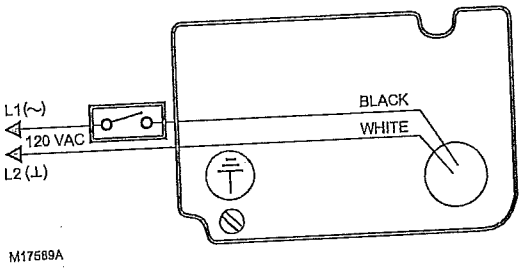

Fig. 2. Typical 120 Vac wiring.

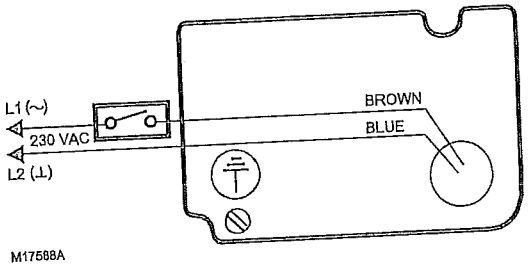

Fig. 3. Typical 230 Vac wiring.

Dimensions:

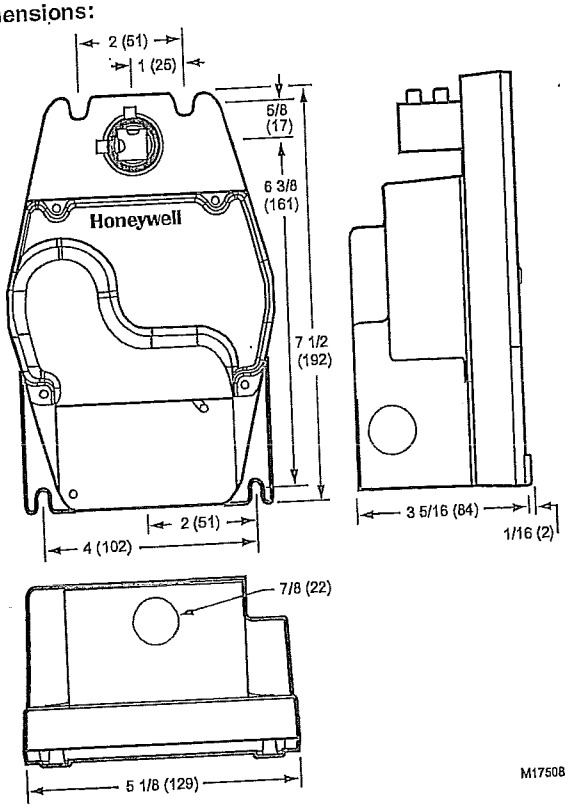

National Fire Codes® is a registered trademark of the National Fire Protection Association (NFPA).

Automation and Control Solutions

Honeywell International Inc.
1985 Douglas Drive North
Golden Valley, MN 55422
customer.honeywell.com

Honeywell Limited-Honeywell Limitée
35 Dynamic Drive
Scarborough, Ontario M1V 4Z9

Honeywell

® U.S. Registered Trademark

Printed in U.S.A. on recycled paper containing at least 10%

Honeywell

MS4120F, MS8120F
Fast-Acting, Two-Position Actuators
FOR FIRE/SMOKE CONTROL APPLICATIONS

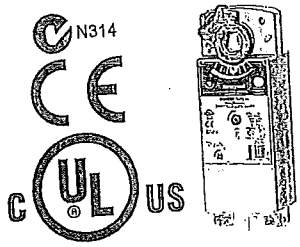

SPECIFICATION DATA

APPLICATION

The MS4120F, MS8120F Fast-Acting, Two-Position Actuators are spring return direct coupled actuators (DCA) for on/off damper control designed to operate reliably in smoke control systems requiring Underwriter's Laboratories Inc. UL555S ratings up to 350°F. The actuator accepts an on/off signal from a single-pole, single-throw (spst) controller. Reversible mounting allows actuator to be used for either clockwise (cw) or counterclockwise (ccw) spring rotation.

SPECIFICATIONS

Auxiliary Switches (SPST):
- ❑ Ratings (maximum load): 250 Vac, 5A resistive, 3A inductive.
- ❑ Settings (fixed): 7° nominal stroke, 85° nominal stroke.

Dimensions:
- ❑ See Fig. 1.

Device Weight:
- ❑ 7 lb (3.2 kg).

Temperature Ratings:
- ❑ Ambient: -40°F to 130°F (-40°C to 55°C).
- ❑ Shipping and Storage: -40°F to 140°F (-40°C to 60°C).

IMPORTANT
The actuator is designed to meet UL555S standards at 350°F (176°C). The actuator must be tested with the damper to achieve this rating.

Humidity Ratings:
- ❑ 5% to 95% RH noncondensing.

Stroke:
- ❑ 95° ± 3°, mechanically limited.

Minimum Damper Shaft Length:
- ❑ 1 in. (25 mm); 3-1/4 (83 mm) recommended.

Mounting:
- ❑ Self-centering shaft adapter.
  - ❑ Round Damper Shafts: 0.5 to 1.06 in.
  - ❑ Square Damper Shafts: 1/2 to 3/4 in.
  - ❑ Actuator can be mounted with shaft in any position.

IMPORTANT
3/4 in. or greater shaft diameter recommended.

Torque Rating (at rated voltage):
- ❑ Typical Holding (minimum at 350°F): 175 lb-in. (20 N•m).
- ❑ Spring Return (minimum at 350°F): 175 lb-in. (20 N•m).
- ❑ Stall Maximum (fully open at 75°F): 425 lb-in. (48.0 N•m).
- ❑ 350°F Minimum Driving: 175 lb-in. (20 N•m).

Design Life (at Rated Voltage):
- ❑ 30,000 full stroke cycles.

FEATURES

- **175 lb-in. (20 N•m) minimum driving torque at 350°F (176°C).**
- **Reversible mounting facilitates use in either clockwise (cw) or counterclockwise (ccw) spring rotation.**
- **Integral spring return ensures level of return torque.**
- **Stainless steel internal spring.**
- **Fifteen-second spring return timing.**
- **No special cycling required during long-term holding.**
- **No audible noise during holding.**
- **Patent pending design eliminates need for limit switches to reduce power consumption.**
- **Models available for 24 and 120 Vac applications.**
- **Ninety-five degree angle of rotation.**
- **Actuator holds rated torque at reduced power level.**
- **Die-cast aluminum housing.**
- **Housing design allows flush mounting to damper.**
- **High-temperature indicator included.**
- **Self-centering shaft adapter (SCSA), patent pending.**
- **High temperature Teflon® lead wires.**
- **Designed to operate reliably in smoke control systems requiring Underwriter's Laboratories Inc. UL555S ratings up to 350°F.**
- **Models available with integral high temperature (350°F) SPST position-indicating switches (7°, 85° stroke).**

Electrical Ratings:
- ❑ Power Input:
  - ❑ MS4120F: 120 Vac ±10%, 60 Hz.
  - ❑ MS8120F: 24 Vac +20%, -10%, 50/60 Hz (Class 2).
- ❑ Power Consumption:
  - ❑ MS4120F: Driving: 0.35A, 35W. Holding: 0.15A, 10W.
  - ❑ MS8120F: Driving: 45 VA. Holding: 10 VA.

Electrical Connections:
- ❑ Lead Wires (both Power and End Switch): 1m Teflon wire.
- ❑ Two integral 3/8 in. flexible conduit connections.

Timing (At Rated Torque and Voltage):
- ❑ Drive Open: 15 seconds typical.
- ❑ Spring Close: 15 seconds typical.

Controller Type:
- ❑ MS4120F: Line voltage (120 Vac), 2-position, spst (Series 40).
- ❑ MS8120F: Low voltage (24 Vac), 2-position, spst (Series 80).

Noise Rating at 1m (Maximum):
- ❑ Driving or Spring Return: 70 dBA.
- ❑ Holding: 20 dBA (no audible noise).

...odels:

Table 1. Actuator Selection (MS Series).

M		Electrical Motor
	S	Fail Safe Function (Spring Return)
	41	120 Vac 2-position Control; Reversible Mount Spring Return
	81	24 Vac 2-position Control; Reversible Mount Spring Return
	20	175 lb-in. (20 N•m)
	F	Fire and Smoke (US)
	1	No Feedback
	0	No Auxiliary Switches
	2	Two Auxiliary Switches
	XX	System Controlled Numbers

M	S	41	20	F	1	2	XX

[a] Internal SPST switches are designed to pass UL555S requirements (at 350°F).

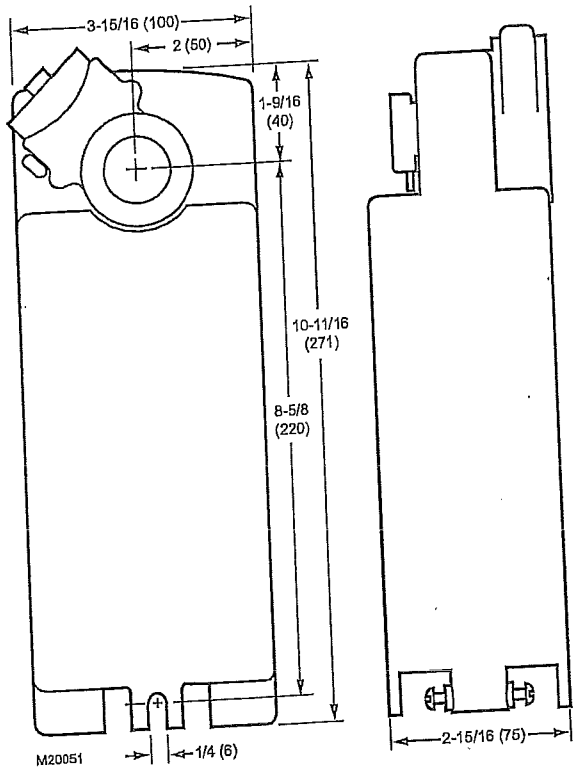

Fig. 1. Dimensional drawing of actuator in in. (mm).

IMPORTANT

A power break of less than one second can cause the actuator to spring-return 5 degrees or less and remain in place until a power break of longer duration.

TYPICAL SPECIFICATION

Power-fail return actuator shall be direct coupled type that requires neither crankarm nor linkage and be capable of direct mounting to a jackshaft of up to one inch diameter. The actuator shall connect to the shaft using a removable output hub with a self-centering shaft coupling that provides concentric mounting.

Actuators shall have integral conduit connections and Teflon leadwires for both power and endswitch connections.

The actuator must provide two-position control. Upon power failure the hub must return by a string-type mechanism internal to the actuator. The actuator design must be for use in either clockwise or counterclockwise fail-safe operation.

Actuators shall have a minimum performance of 30,000 full stroke cycles documented in the product literature. Actuators shall be UL and cUL listed, manufactured under ISO 9001 International Quality Control Standards.

Cycling Requirements:

- ❑ Prolonged holding-period (1 year) testing of these actuators has been performed with no spring return failures. The actuator and the internal spring are designed to require no special cycling during long-term holding.
- ❑ Honeywell recommends following all local, state and national codes for periodic testing of the entire smoke control system. Refer to National Fire Protection Association (NFPA) National Fire Codes®: NFPA90A, NFPA92A and NFPA92B for your application.
- ❑ NFPA recommends periodic examination of each fire/smoke damper (semi-annually or annually) to ensure proper performance.

Environmental Protection Ratings:

- ❑ NEMA2 and IP54 when mounted on a horizontal shaft.

Approvals:

- ❑ See Table 2.

Accessories (not supplied with actuator):

- ❑ 205649 Mounting Bracket (not supplied with actuator).

Table 2. Approvals.

	MS4120F	MS8120F
UL/cUL	X	X
UL873 Plenum Rating, File No. E4436; Guide No. XAPX.[a]	X	X
CE		X
C-TICK		X

[a] Plenum applications require that conductors be enclosed in conduit (see Wiring section for conduit details).

Teflon® is a registered trademark of the E.I. du Pont de Nemours and Company.

National Fire Codes® is a registered trademark of the National Fire Protection Association (NFPA).

Automation and Control Solutions

Honeywell International Inc.
1985 Douglas Drive North
Golden Valley, MN 55422
customer.honeywell.com

Honeywell Limited-Honeywell Limitée
35 Dynamic Drive
Scarborough, Ontario M1V 4Z9

Honeywell

® U.S. Registered Trademark

Printed in U.S.A. on recycled paper containing at least 10%

70072-0_ _-1D

FSAF24-SR (-S) US Proportional Fire and Smoke Actuator

BELIMO

Proportional damper actuator, spring return, 24 V power. 2 to 10 VDC, and 4 to 20 mA control signal. Output signal of 2 to 10 VDC for position indication. Operation at 250F for limited time per UL555S testing.

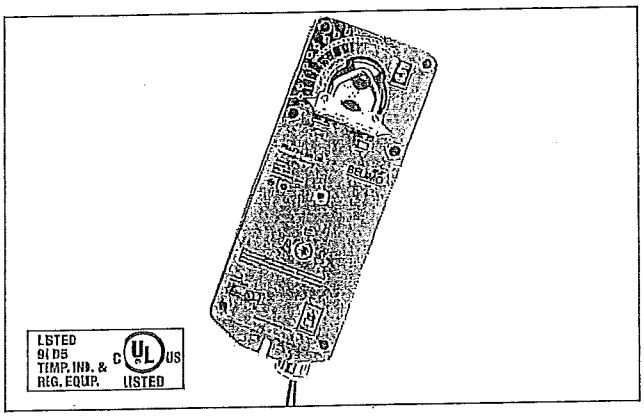

Technical Data	FSAF24-SR (-S) US
Power supply	24 VAC ± 20% 50/60 Hz 24 VDC ± 10%
Power consumption	running: 7W 11 VA ; holding: 3W 5 VA
Transformer sizing	15 VA (class 2 power source)
Electrical connection Motor Auxiliary switches	 3 ft, 18 ga, 4 color coded leads (24V) 3 ft, 18 ga, appliance cable 1/2" conduit connectors
Overload protection	electronic throughout 0° to 95° rotation
Operating range	2 to 10 VDC, 4 to 20 mA
Input impedance	100kΩ (0.1 mA), 500Ω
Feedback output "U"	2 to 10 VDC (max. 0.5 mA) for 95°
Angle of rotation	mechanically limited to 95°
Torque	133 in-lb [15 Nm] constant
Direction of rotation	spring return reversible with CW/CCW mounting. The control direction switch is not present. Direct acting only. 2 VDC=Fail-safe position.
Position indication	visual indicator, 0° to 95° (0° is spring return position)
Manual override	3mm hex crank (shipped w/actuator)
Running time	<75 sec. constant, independent of load, spring return < 20 seconds
Humidity	5 to 95% RH non-condensing
Ambient temperature - Normal duty - Safety duty	 -22°F to +122°F [-30°C to +50°C] 3 on/off cycles after 30 minutes at ambient temperature of 250°F [121°C]
Storage temperature	-40°F to +176°F [-40°C to +80°C]
Housing	NEMA type 1 / IP40
Housing material	zinc coated metal
Agency listings	cULus to UL873 and CSA C22.2 No. 24-93
Noise level	max. 45 dB (A)
Servicing	maintenance free
Quality standard	ISO 9001, 5 year Belimo warranty
Weight	6.0 lbs (2.7 kg.)
	FSAF24-SR-S US (same as above)
Auxiliary Switch	2 x SPST 7A resistive, 2.5A inductive at 120/250VAC. UL listed, double-insulated, one set at =+10°, one adjustable 30° to 90°

Torque min. 133 in-lb, for control of air dampers

Application
For proportional modulation of UL555S rated dampers in HVAC. Actuator sizing should be done in accordance with the damper manufacturer's specifications.

The actuator is mounted directly to a damper shaft or jackshaft up to 1.05" in diameter by means of its universal clamp. A crankarm and mounting brackets are available if the actuator cannot be direct coupled to the jackshaft or damper shaft.

The actuator operates in response to a 2 to 10 VDC, or with the addition of a 500Ω resistor, a 4 to 20 mA control input from an electronic controller or positioner. A 2 to 10 VDC feedback signal is provided for position indication or master-slave applications.

Operation
The FSAF series actuators provide true spring return operation for reliable fail-safe application and positive close-off on UL555S dampers. The spring return system provides constant torque to the damper with, and without, power applied to the actuator.

The FSAF series provides 95° of rotation and is provided with a graduated position indicator showing 0° to 95°. The FSAF has a unique manual positioning mechanism which allows the setting of any damper position within its 95° of rotation.

The actuator is shipped in the zero position to provide automatic compression against damper gaskets for tight shut-off. When power is applied, the manual mechanism is released and the actuator drives toward the full fail-safe position. The actuator will memorize the angle where it stops rotating and use this point as its zero position for its normal control operations. The manual override can also be released physically by the use of a crank supplied with the actuator.

The FSAF uses a brushless DC motor which is controlled by a microprocessor. The actuator may be stalled anywhere during its rotation without damage.

This is a direct acting actuator. At a 2V signal the actuator will be in the spring return safety direction. With an increase in signal, the actuator drives the damper open. If power is removed, the damper will spring closed. Interlocks must be provided as necessary for life safety functions and to shut down fan if required.

Dimensions (All numbers in brackets are metric.)

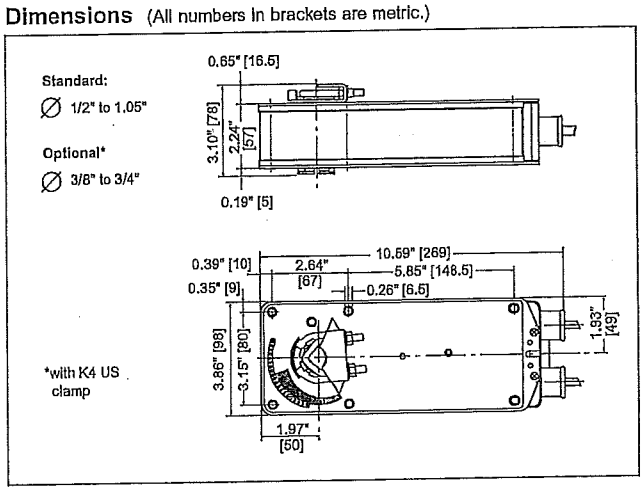

FSAF24-SR (-S) US Proportional Fire and Smoke Actuator

UL555S modulating damper actuator, spring return safety, 24 V for 2 to 10 VDC, and 4 to 20 mA control signal. Output signal of 2 to 10 VDC for position indication.

Accessories

AF series accessories may be employed:

IND-AF2	Damper position indicator
K4 US	Universal clamp for 3/8" to 3/4" shafts
K4-1 US	Universal clamp for up to 1.05" dia. jackshafts
K4-H	Universal clamp for hexshafts 3/8" to 5/8"
KH-AF	Crankarm for up to 3/4" round shaft (Series 2)
KH-AF-1	Crankarm for up to 1.05" jackshaft (Series 2)
KH-AFV	V-bolt kit for KH-AF and KH-AF-1
Tool-01	10 mm wrench
SGA24	Min. and/or max. positioner in NEMA 4 housing
SGF24	Min. and/or max. positioner for flush panel mounting
ZG-R01	500Ω resistor for 0 to 20 mA control signal
ZDB-AF2	Angle of rotation limiter
ZG-100	Universal mounting bracket
ZG-101	Universal mounting bracket
ZG-102	Multiple actuator mounting bracket
ZG-103	Universal mounting bracket
ZG-104	Universal mounting bracket
ZG-106	Mounting bracket for Honeywell® Mod IV replacement or new crankarm type installations
ZG-107	Mounting bracket for Honeywell® Mod III or Johnson® Series 100 replacement or new crankarm type installations
ZG-108	Mounting bracket for Barber Colman® MA 3../4.., Honeywell® Mod III or IV or Johnson® Series 100 replacement or new crankarm type installations
ZG-AF	Crankarm adaptor kit for AF/NF
AF108	Crankarm adaptor kit for AF/NF
ZS-100	Weather shield (metal)
ZS-150	Weather shield (polycarbonate)
ZS-260	Explosion-proof housing
ZS-300	NEMA 4X housing

For an overview of how to apply the accessories, see Belimo Mechanical Accessories and refer to the Belimo Mounting Methods Guide.

Note: When using FSAF24-SR (-S) US actuators, only use accessories listed on this page.

FSAF24-SR (-S) US Typical Specification

Proportional smoke, and combination fire and smoke dampers, shall be controlled by Belimo FSAF24-SR actuators. The control signal shall provide proportional damper control in response to a 2 to 10 VDC or, with the addition of a 500Ω resistor, a 4 to 20 mA control input from an electronic controller or positioner. The actuators must be designed so that they may be used for either clockwise or counter clockwise fail-safe operation. Actuator shall open damper in <75 seconds per UL555S and shall spring closed in under 20 seconds. Actuators shall be UL listed, have a 5-year warranty, and be manufactured under ISO 9001 International Quality Control Standards. Actuators shall be as manufactured by Belimo. Actuators with auxiliary switches must be constructed to meet the requirement for double insulation so an electrical ground connection is not required to meet agency listings.

Safety Note

Screw a conduit fitting into the actuator's metal bushing. Jacket the actuator's input and output wiring with suitable flexible conduit. Properly terminate the conduit in a suitable junction box.

Wiring diagrams

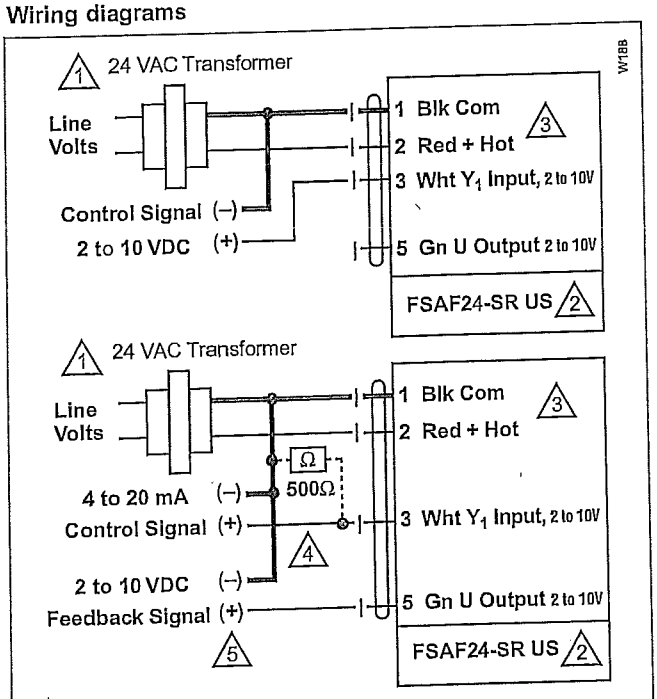

1 Provide overload protection and disconnect as required.
Actuators may be connected in parallel. Power consumption and input impedance must be observed.

3 Actuator may also be powered by 24 VDC.

4 The ZG-R01 500Ω resistor converts the 4 to 20 mA control signal to 2 to 10 VDC.

5 Only connect common to neg. (—) leg of control circuits

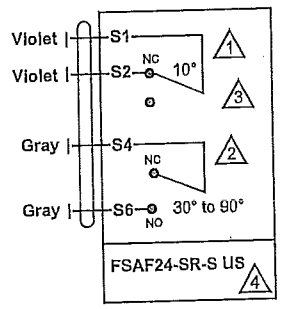

1 For end position indication, interlock control, fan startup, etc., FSAF24-SR-S US incorporates two built-in auxiliary switches: 2 x SPST, 7A resistive, 2.5A inductive 120/250 VAC, UL listed, one switch is fixed at 10°, one is adjustable 30° to 90°.

2 Meets UL requirements without the need of an electrical ground connection.

3 ⧈ Double insulated.

4 Actuators may be connected in parallel. Power Consumption must be observed.

Replacement Applications

The number one "equal or better" requirement for use as a replacement for obsolete defective motors is the UL555S listing of the Belimo actuator with the damper for the application. The local authority having jurisdiction sets the requirements since UL has stated that they do not regulate replacements.

As of this writing, Belimo is the only manufacturer of UL555S listed proportional actuators.

Tag: Honeywell

Specification: 15950

Manufacture: Honeywell

Drawing reference: All

Location: B2 Ramp Level & Passenger level

HONEYWELL ATC

REP: BUILDING SYSTEMS AND SERVICES

PHONE: 973-927-3150

Terminal B Rehabilitation of Satellite B-2
Newark Liberty International Airport
Newark, NJ

Automatic Temperature Controls
Revised 9/2/11

Contractor:
J. Moore & Co.
118 Naylon Avenue
Livingston, NJ 07039

Submitted By:
Building Systems & Services, Inc.
270 US Highway 206, Suite 307
Flanders, NJ 07836
973-927-3150 ph
973-927-7769 fax

March 22, 2011

Honeywell

AUTHORIZED CONTROLS INTEGRATOR

Honeywell

AUTHORIZED CONTROLS INTEGRATOR

SYSTEM ARCHITECTURE

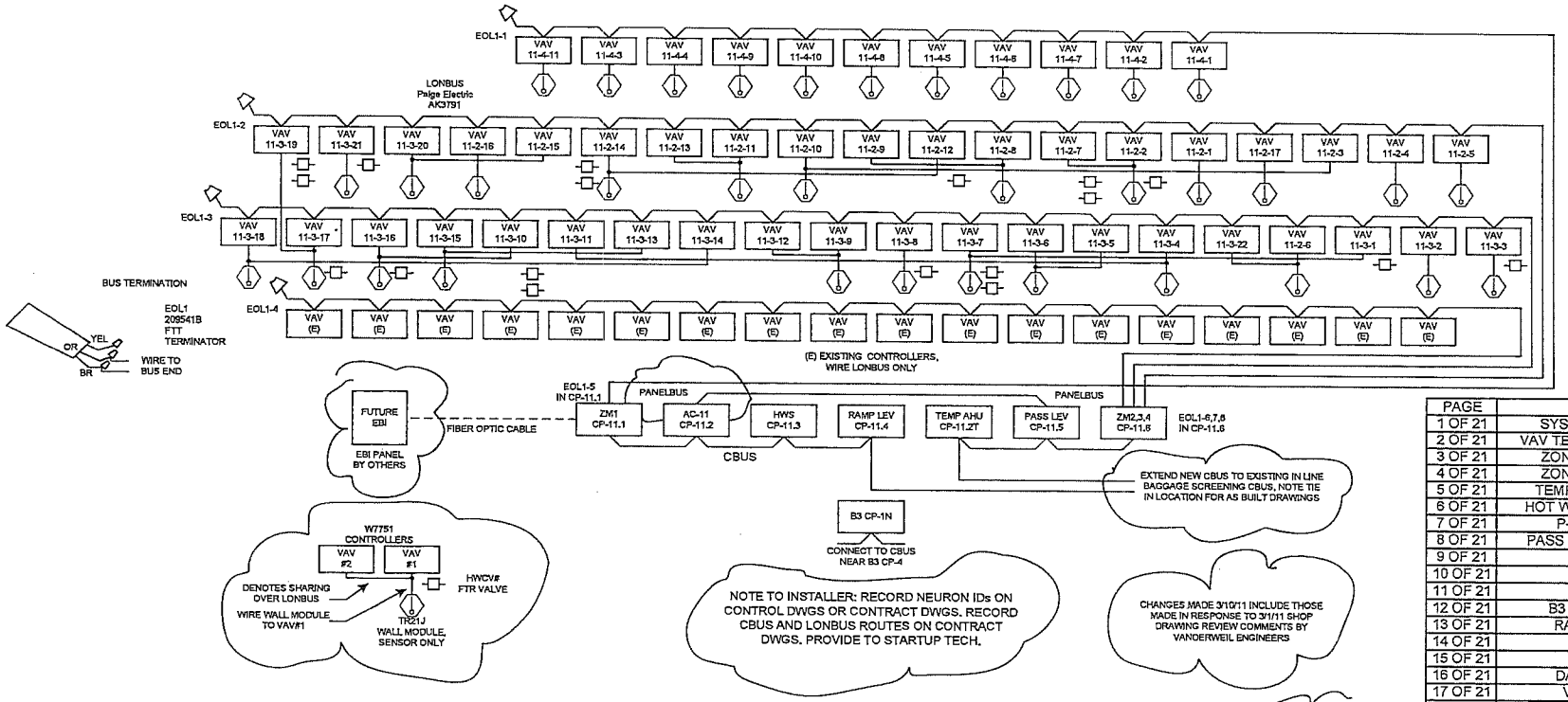

THERMOSTAT GUARDS WILL BE PROVIDED FOR ONLY 3 UNITS, AHU-3A, AHU-6A, AHU-6B

ALL THERMOSTAT AND SPACE SENSOR HEIGHTS AFF MUST BE CONFIRMED BY ENGINEER

ALL FIRE ALARM WORK, SMOKE DAMPER WORK, FIRE DAMPER WORK AND SMOKE PURGE CONTROL WORK BY OTHERS

NOTE TO INSTALLER, SEE DISCONNECT/RECONNECT & TEMP COOLING NOTES ON "REMOVAL" CONTRACT DWGS

PAGE	TITLE
1 OF 21	SYSTEM ARCHITECTURE
2 OF 21	VAV TERMINAL UNIT CONTROL
3 OF 21	ZONE MANAGER CP-11.1
4 OF 21	ZONE MANAGER CP-11.6
5 OF 21	TEMPORARY AHU CP11.2T
6 OF 21	HOT WATER SYSTEM CP-11.3
7 OF 21	P-5.01 & P-5.02 VFDs
8 OF 21	PASS & ROOF LEVEL CP-11.5
9 OF 21	AC-11 CP-11.2
10 OF 21	AC-11 VFDs
11 OF 21	AC-11 I/O
12 OF 21	B3 RAMP LEVEL CP-1N
13 OF 21	RAMP LEVEL CP-11.4
14 OF 21	RAMP LEVEL I/O
15 OF 21	DETAILS
16 OF 21	DAMPER SCHEDULE
17 OF 21	VALVE SCHEDULE
18 OF 21	SEQUENCE OF OPERATION
19 OF 21	AC-11 CONTROL LAYOUT
20 OF 21	CONTROL PANEL LAYOUT
21 OF 21	HV-1.1 & HV-1.2 CONTROL

REV.	DESCRIPTION	DATE	BY
3	CABLE REV 2	3/22/11	PH
2	ADD PAGE 21	3/15/11	PH
1	SHOW PNLBUS, ILB CBUS, FOC	3/10/11	PH

Building Systems & Services, Inc.
270 US Highway 206, Suite 307
Flanders, NJ 07836
973-927-3150

DATE 1/3/11

SYSTEM ARCHITECTURE

JOB NAME: TERMINAL B REHABILITATION OF SATELLITE B-2
NEWARK LIBERTY INTERNATIONAL AIRPORT
NEWARK, NJ

CONTRACTOR: J. MOORE & CO.
118 NAYLON AVE.
LIVINGSTON, NJ 07039

DRAWN BY	DWG NO	REV
PFH	PH010311-1A	3

SCALE	REV DATE: 3/22/11	SHEET
None		1 OF 21

VAV TU SCHEDULE					
UNIT	MAX	MIN	SIZE	TS1-R	HWCV-#
VAV-11-2-1	1080	1080	10	Y	
VAV11-2-2	2040	1230	14	Y/2-7	18
VAV11-2-3	1210	910	10	N/2-10	
VAV11-2-4	1630	1630	12	Y	
VAV11-2-5	1800	1800	12	Y	
VAV11-2-6	845	845	8	Y/3-22	
VAV11-2-7	1760	1360	12	N/2-2	16 & 17
VAV11-2-8	1900	1900	12	N/2-9	
VAV11-2-9	1220	1220	10	Y/2-8	
VAV11-2-10	1050	790	10	Y/2-3	
VAV11-2-11	1220	1220	10	Y/2-13	
VAV11-2-12	1560	1365	12	N/2-14	15
VAV11-2-13	1900	1900	12	N/2-11	
VAV11-2-14	1550	1365	12	Y/2-12	13 & 14
VAV11-2-15	1220	1220	10	N/3-20	
VAV11-2-16	1210	910	10	Y	
VAV11-2-17	400	400	6	Y	
VAV11-3-1	1310	1280	10	N/3-7	2
VAV11-3-2	1350	1350	10	Y	
VAV11-3-3	1340	550	10	Y	1
VAV11-3-4	1210	910	10	Y/3-11	
VAV11-3-5	1220	1220	10	N/3-6	
VAV11-3-6	1900	1900	12	Y/3-5	
VAV11-3-7	1280	1240	10	Y/3-1	3 & 4
VAV11-3-8	1400	1200	12	Y	5
VAV11-3-9	1900	1900	12	Y/3-12	
VAV11-3-10	1430	1430	12	N/3-16	6 & 7
VAV11-3-11	1210	910	10	N/3-4	
VAV11-3-12	1220	1220	10	N/3-9	
VAV11-3-13	1220	1220	10	N/3-15	
VAV11-3-14	1220	1220	10	N/3-18	
VAV11-3-15	1550	1550	12	Y/3-13	
VAV11-3-16	1450	1430	12	Y/3-10	8
VAV11-3-17	1300	1300	10	Y/3-19	9
VAV11-3-18	1900	1900	12	Y/3-14	
VAV11-3-19	1310	1310	10	N/3-17	10 & 11
VAV11-3-20	1900	1900	12	Y/2-15	
VAV11-3-21	1320	1090	10	Y	12
VAV11-3-22	845	845	8	N/2-6	
VAV11-4-1	200	80	4	Y	
VAV11-4-2	1180	1180	10	Y	
VAV11-4-3	420	180	6	Y	
VAV11-4-4	1310	890	10	Y	
VAV11-4-5	130	80	4	Y	
VAV11-4-6	650	650	8	Y	
VAV11-4-7	250	140	5	Y	
VAV11-4-8	170	70	4	Y	
VAV11-4-9	350	240	5	Y	
VAV11-4-10	780	420	8	Y	
VAV11-4-11	810	640	8	Y	

VAV POWER SCHEDULE							
LON1		LON2			LON3		
TR2-1	TR2-2	TR1-1	TR1-2	TR1-3	TR1-4	TR1-5	TR1-6
4-1	4-10	2-5	2-8	2-15	3-3	3-6	3-11
4-2	4-9	2-4	2-12	2-16	3-2	3-7	3-10
4-7	4-4	2-3	2-9	3-20	3-1	3-8	3-15
4-6	4-3	2-17	2-10	3-21	2-6	3-9	3-16
4-5	4-11	2-1	2-11	3-19	3-22	3-12	3-17
4-8		2-2	2-13		3-4	3-14	3-18
		2-7	2-14		3-5	3-13	
SEE ZONE MANAGERS PAGES 3, 4							

BILL OF MATERIAL

TAG	QTY	PART#	DESCRIPTION
C1*	50	W7751H2025	VAV CONTROLLER
TS1	35	TR21J	WALL MODULE, 20KOHM SENSOR ONLY

* Factory Mounted & Wired

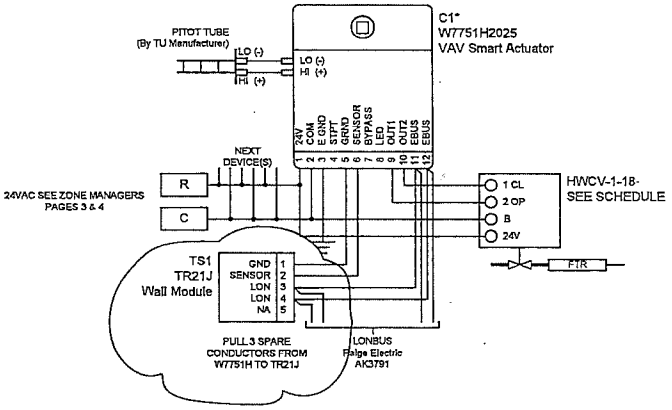

VAV TERMINAL UNIT WIRING
TYPICAL FOR 50 UNITS, SEE NOTES

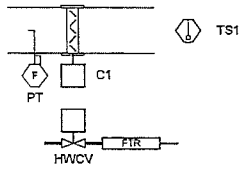

NOTE 1: ON DWGS M204 & M205, WIRE HWCV TO CONTROLLERS AS INDICATED. TYPICAL FOR 13 FOR 5 UNITS, 2 VALVES EACH

NOTE 2: WIRE LONBUS TO EACH CONTROLLER & WALL MODULE

ALL SENSOR WIRING AND BUS WIRING SHOULD BE ROUTED AWAY FROM HIGH EMI ENVIRONMENTS.

Honeywell

AUTHORIZED CONTROLS INTEGRATOR

REV.	DESCRIPTION	DATE	BY
3			
2			
1	TR21J WALL MODULE	3/10/11	PH

Building Systems & Services, Inc.
270 US Highway 205, Suite 307
Flanders, NJ 07836
973-927-3150

VAV TERMINAL UNIT CONTROL

JOB NAME: TERMINAL B REHABILITATION OF SATELLITE B-2
NEWARK LIBERTY INTERNATIONAL AIRPORT
NEWARK, NJ

CONTRACTOR: J. MOORE & CO.
118 NAYLON AVE.
LIVINGSTON, NJ 07039

DATE	DRAWN BY	DWG NO	REV
1/3/11	PFH	PH010311-1B	1

SCALE	REV DATE: 3/10/11	SHEET
None		2 OF 21

Honeywell

AUTHORIZED CONTROLS INTEGRATOR

BILL OF MATERIAL
PANEL DEVICES

TAG	QTY.	PART#	DESCRIPTION
C5	1	Q7750A2003	ZONE MANAGER
	1	XD505A	CBUS SUBMODULE
BNA1	1	Q7055B1005	14507741-002 BUILDING NETWORK ADAPTER
FC1	1	TFC-110S15	SINGLE MODE FIBER CONVERTER
CBL2	1	CAT6CABLE	CAT 6 CABLE, 3'
PS1	2	TPB2020	24VAC POWER SUPPLY
TR1	1	AT175F1022	24VAC, 50 VA TRANSFORMER
TR2	2	AT175F1023	24VAC 75 VA TRANSFORMER
CP-11.1	1	EN4SD303010GY	NEMA 4/12 ¼ TURN ENCLOSURE
	1	EP3030	PANEL
PAN1	2	PAC1X3/LG6'	PANEL RACEWAY
	2	PAC1LG6'	RACEWAY COVER
MMI1	1	XI582AH	MMI
CBL1	1	XW566	CABLE
EOL1	2	209541B	FTT TERMINATION MODULE
TB1	4	105SP	5 POLE TERMINAL BLOCK
JMPR	2	JSPS	10 POLE JUMPER STRIP

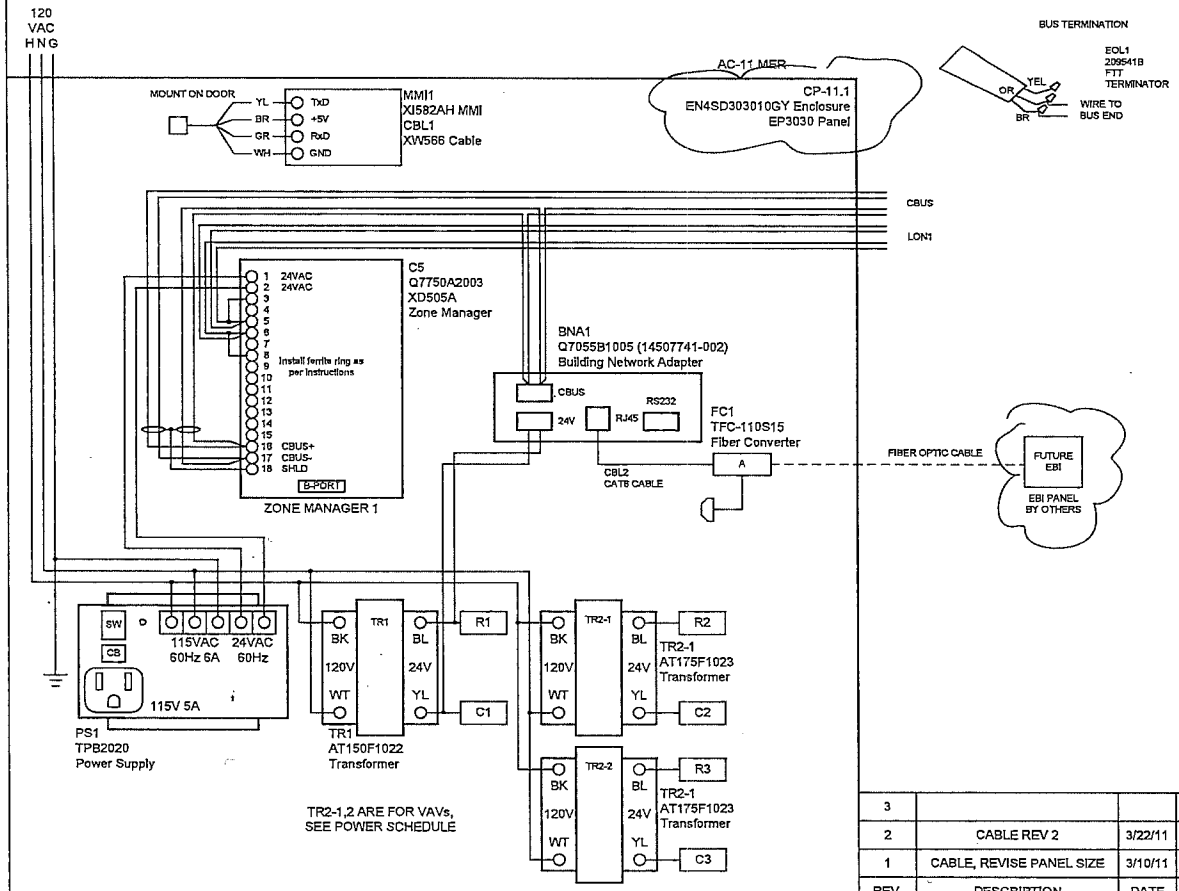

REV.	DESCRIPTION	DATE	BY
3			
2	CABLE REV 2	3/22/11	PH
1	CABLE, REVISE PANEL SIZE	3/10/11	PH

Building Systems & Services, Inc.
270 US Highway 206, Suite 307
Flanders, NJ 07836
973-927-3150

DATE 1/3/11

ZONE MANAGER CP-11.1

JOB NAME: TERMINAL B REHABILITATION OF SATELLITE B-2
NEWARK LIBERTY INTERNATIONAL AIRPORT
NEWARK, NJ

CONTRACTOR: J. MOORE & CO.
118 NAYLON AVE.
LIVINGSTON, NJ 07039

DRAWN BY	DWG NO	REV
PFH	PH010311-1C	2

SCALE	REV DATE: 3/22/11	SHEET
None		3 OF 21

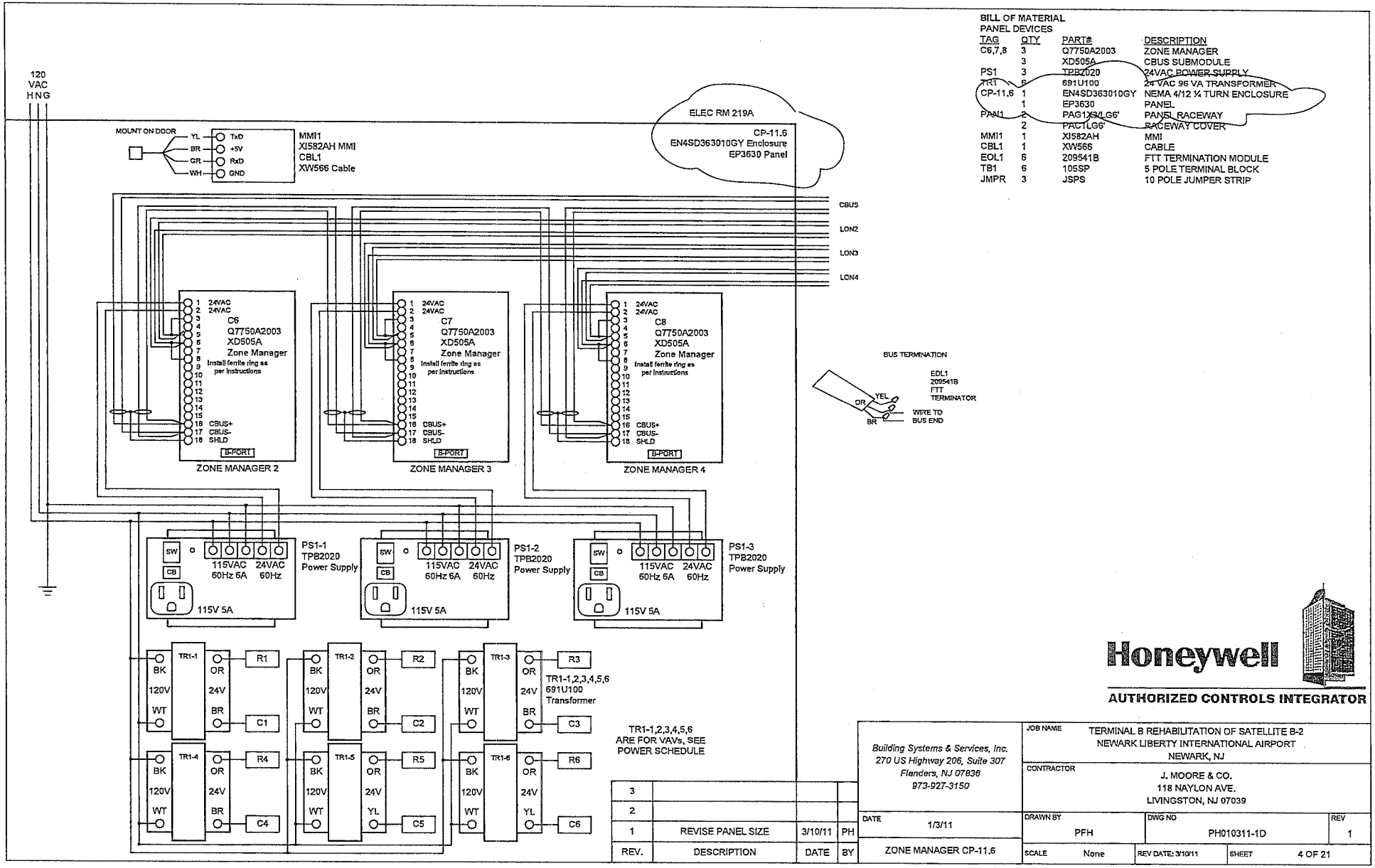

BILL OF MATERIAL
PANEL DEVICES

TAG	QTY	PART#	DESCRIPTION
C6,7,8	3	Q7750A2003	ZONE MANAGER
	3	XD505A	CBUS SUBMODULE
PS1	3	TPB2020	24VAC POWER SUPPLY
TR1	6	691U100	24 VAC 96 VA TRANSFORMER
CP-11.6	1	EN4SD363010GY	NEMA 4/12 ¼ TURN ENCLOSURE
	1	EP3630	PANEL
PAN1	2	PAG1X3/LG6'	PANEL RACEWAY
	2	PAC1LG6'	RACEWAY COVER
MMI1	1	XI582AH	MMI
CBL1	1	XW566	CABLE
EOL1	6	209541B	FTT TERMINATION MODULE
TB1	6	105SP	5 POLE TERMINAL BLOCK
JMPR	3	JSPS	10 POLE JUMPER STRIP

Honeywell

AUTHORIZED CONTROLS INTEGRATOR

REV.	DESCRIPTION	DATE	BY
3			
2			
1	REVISE PANEL SIZE	3/10/11	PH

Building Systems & Services, Inc.
270 US Highway 206, Suite 307
Flanders, NJ 07836
973-927-3150

JOB NAME: TERMINAL B REHABILITATION OF SATELLITE B-2
NEWARK LIBERTY INTERNATIONAL AIRPORT
NEWARK, NJ

CONTRACTOR: J. MOORE & CO.
118 NAYLON AVE.
LIVINGSTON, NJ 07039

DATE: 1/3/11
DRAWN BY: PFH
DWG NO: PH010311-1D
REV: 1
ZONE MANAGER CP-11.6
SCALE: None
REV DATE: 3/10/11
SHEET: 4 OF 21

Honeywell

AUTHORIZED CONTROLS INTEGRATOR

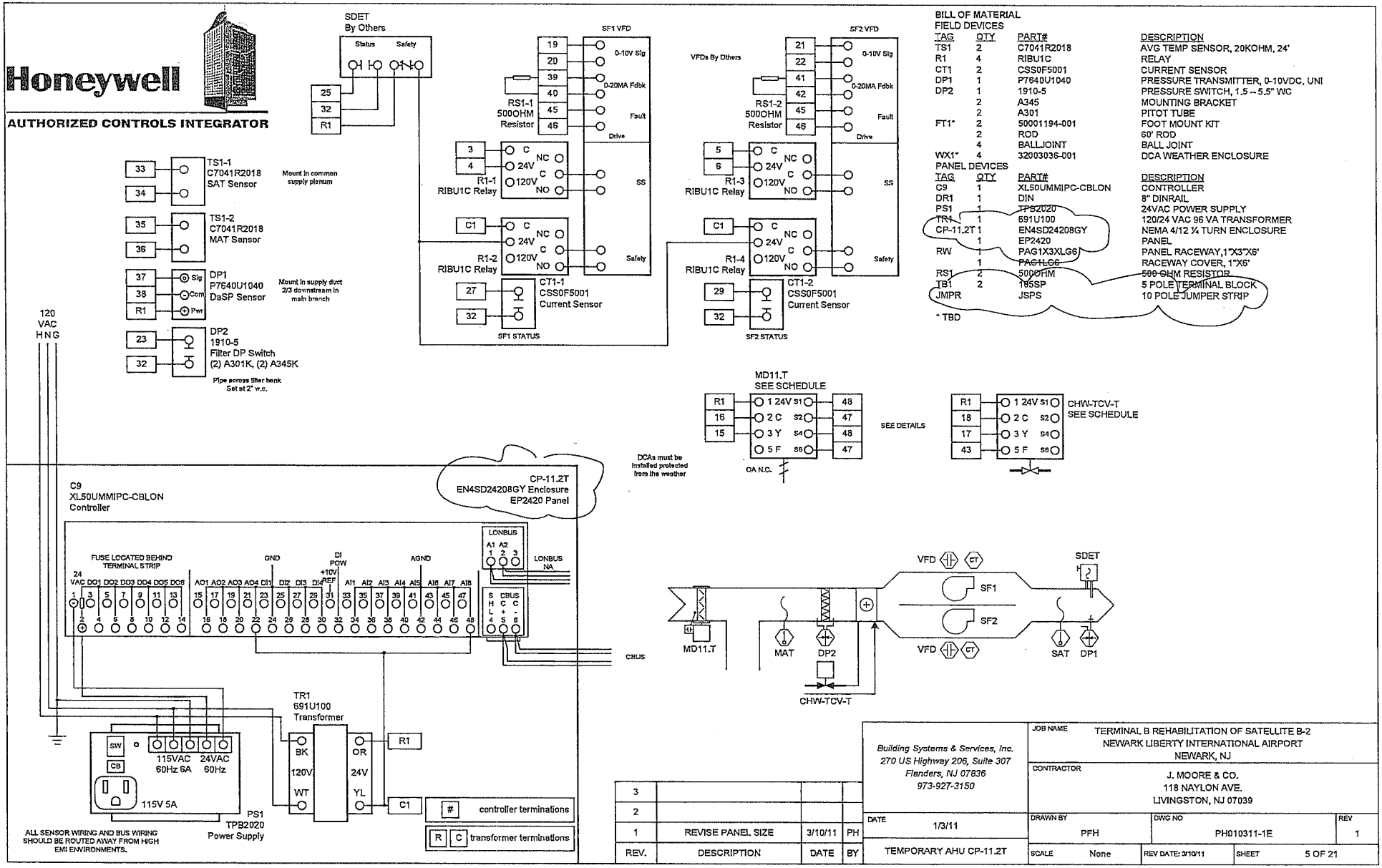

BILL OF MATERIAL

FIELD DEVICES

TAG	QTY	PART#	DESCRIPTION
TS1	2	C7041R2018	AVG TEMP SENSOR, 20KOHM, 24'
R1	4	RIBU1C	RELAY
CT1	2	CSS0F5001	CURRENT SENSOR
DP1	1	P7640U1040	PRESSURE TRANSMITTER, 0-10VDC, UNI
DP2	1	1910-5	PRESSURE SWITCH, 1.5 – 5.5" WC
	2	A345	MOUNTING BRACKET
	2	A301	PITOT TUBE
FT1*	2	50001194-001	FOOT MOUNT KIT
	2	ROD	60' ROD
	4	BALLJOINT	BALL JOINT
WX1*	4	32003036-001	DCA WEATHER ENCLOSURE

PANEL DEVICES

TAG	QTY	PART#	DESCRIPTION
C9	1	XL50UMMIPC-CBLON	CONTROLLER
DR1	1	DIN	8" DINRAIL
PS1	1	TPS2020	24VAC POWER SUPPLY
TR1	1	691U100	120/24 VAC 96 VA TRANSFORMER
CP-11.2T	1	EN4SD24208GY	NEMA 4/12 ¼ TURN ENCLOSURE
	1	EP2420	PANEL
RW	1	PAG1X3XLG6	PANEL RACEWAY,1"X3"X6'
	1	PAG1LG6	RACEWAY COVER, 1"X6'
RS1	2	5000HM	500 OHM RESISTOR
TB1	2	185SP	5 POLE TERMINAL BLOCK
JMPR		JSPS	10 POLE JUMPER STRIP

* TBD

REV.	DESCRIPTION	DATE	BY
3			
2			
1	REVISE PANEL SIZE	3/10/11	PH

Building Systems & Services, Inc.
270 US Highway 206, Suite 307
Flanders, NJ 07836
973-927-3150

DATE 1/3/11

TEMPORARY AHU CP-11.2T

JOB NAME: TERMINAL B REHABILITATION OF SATELLITE B-2
NEWARK LIBERTY INTERNATIONAL AIRPORT
NEWARK, NJ

CONTRACTOR: J. MOORE & CO.
118 NAYLON AVE.
LIVINGSTON, NJ 07039

DRAWN BY	DWG NO	REV
PFH	PH010311-1E	1

SCALE	REV DATE: 3/10/11	SHEET
None		5 OF 21

Honeywell

AUTHORIZED CONTROLS INTEGRATOR

BILL OF MATERIAL

FIELD DEVICES

TAG	QTY	PART#	DESCRIPTION
TS1	6	C7041D2001	IMMERSION TEMP SENSOR, 20KOHM
	6	50001774-001	WELL
R1	4	RIBU1C	RELAY
CT1	4	CSS0F5001	CURRENT SENSOR
DP1	2	PWT50	PRESSURE TRANSMITTER, 0-10VDC, 0-50 PSI
	2	PWT-BV	BYPASS VALVE MANIFOLD

PANEL DEVICES

TAG	QTY	PART#	DESCRIPTION
C2		XL800	CONTROLLER
	1	XCL8010AU	CPU MODULE
	3	XF821AU	AI MODULE
	1	XFR822AU	AO MODULE
	2	XF823AU	DI MODULE
	1	XFR824AU	DO MODULE
	4	XSU821-22	AI/AO TERMINAL SOCKET
	2	XSU823	DI TERMINAL SOCKET
	1	XSU824-25	DO TERMINAL SOCKET
DR1	1	DIN	3' DINRAIL
PS1	1	TPB2020	24VAC POWER SUPPLY
TR1	3	AT175F1023	24VAC, 75 VA TRANSFORMER
CP-11.3	1	EN4SD363010GY	NEMA 4/12 ¼ TURN ENCLOSURE
	1	EP3630	PANEL
RW	2	PAG1X3XLG6	PANEL RACEWAY,1"X3"X6'
	2	PAC1LG6	RACEWAY COVER, 1"X6'
MMI1	1	XI582AH	MMI
CBL1	1	XW882	CABLE
TB1	4	1050P	5 POLE TERMINAL BLOCK
JMPR	2	JSPS	10 POLE JUMPER STRIP
RS1	3	500OHM	500 OHM RESISTOR
PS2	3	DCPA1.2	DC POWER SUPPLY

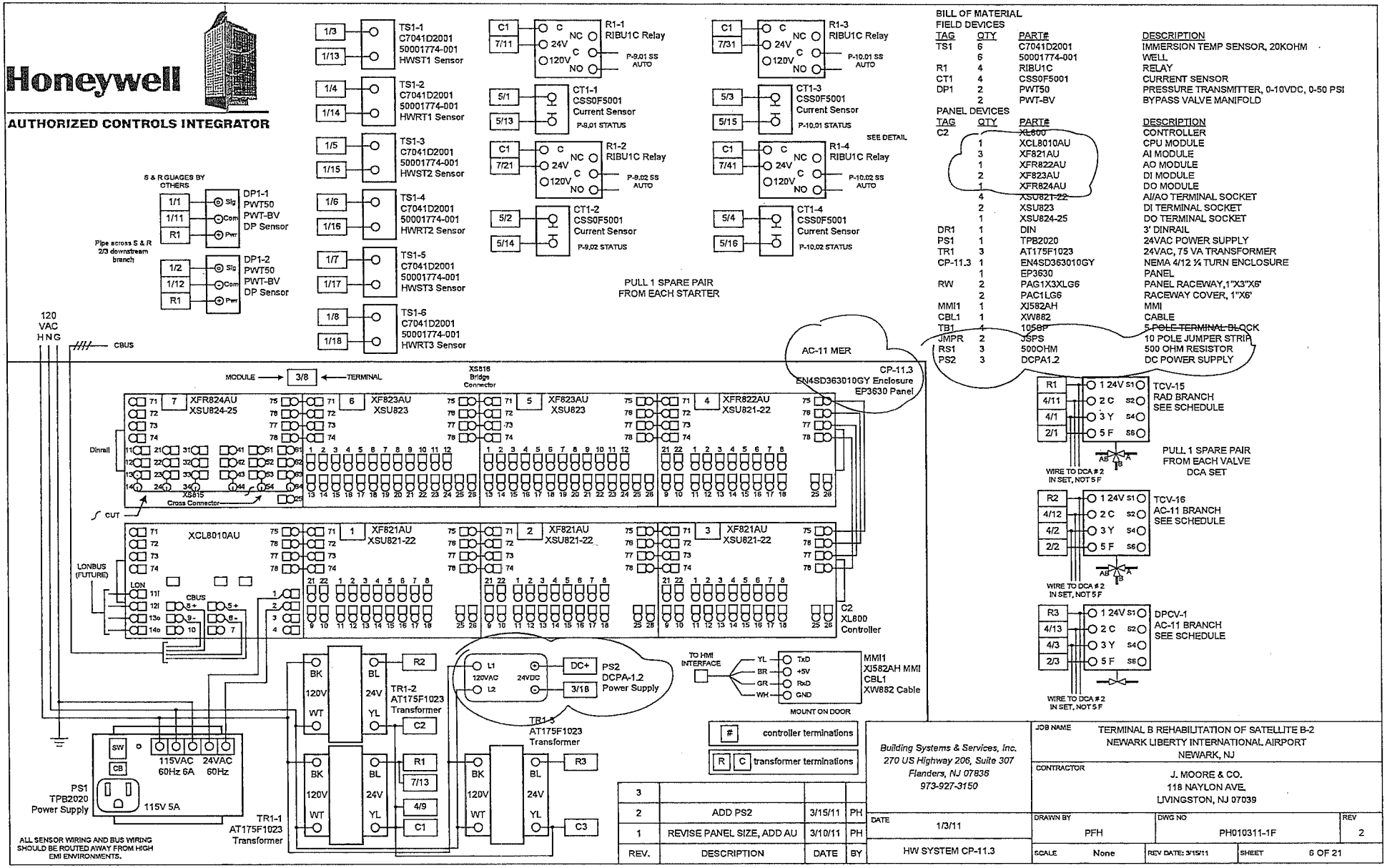

REV.	DESCRIPTION	DATE	BY
3			
2	ADD PS2	3/15/11	PH
1	REVISE PANEL SIZE, ADD AU	3/10/11	PH

Building Systems & Services, Inc.
270 US Highway 206, Suite 307
Flanders, NJ 07836
973-927-3150

DATE 1/3/11

HW SYSTEM CP-11.3

JOB NAME: TERMINAL B REHABILITATION OF SATELLITE B-2
NEWARK LIBERTY INTERNATIONAL AIRPORT
NEWARK, NJ

CONTRACTOR: J. MOORE & CO.
118 NAYLON AVE.
LIVINGSTON, NJ 07039

DRAWN BY	DWG NO	REV
PFH	PH010311-1F	2

SCALE	REV DATE: 3/15/11	SHEET
None		6 OF 21

Honeywell

AUTHORIZED CONTROLS INTEGRATOR

BILL OF MATERIAL
FIELD DEVICES

TAG	QTY	PART#	DESCRIPTION
R1	2	RIBU1C	RELAY
CT1	2	CSS0F5001	CURRENT SENSOR
RS1	2	500OHM	500 OHM RESISTOR
TS1	1	C7041K2005	STRAP-ON TEMP SENSOR, 20KOHM

WIRE VFDs TO XL500
HXCR2 CONTROLLER #10
(in crawlspace near stairs)

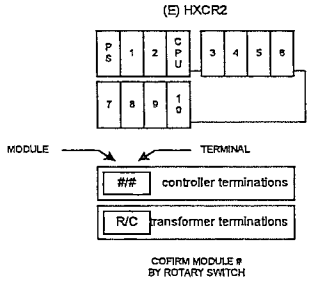

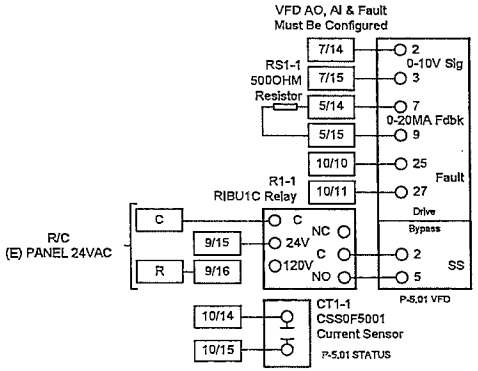

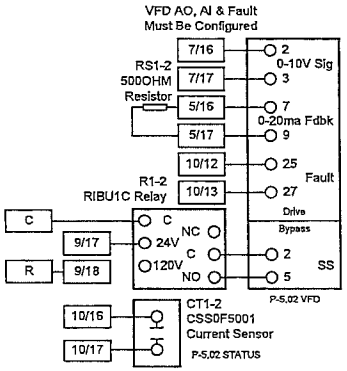

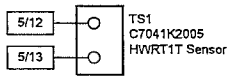

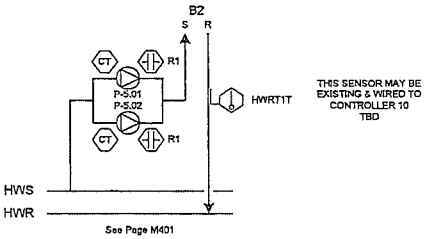

VFDS & VFD STARTUP BY OTHERS. WIRE VFDs TO (E) HONEYWELL CONTROLLER. TERMINATIONS TBD BY STARTUP TECH. OWNER MUST PROVIDE BSS WITH THE MOST CURRENT CARE DATABASE FOR THE (E) HONEYWELL CONTROLLER. SEE DWG PH010311-1R FOR SEQUENCE OF OPERATION.

PULL 2 SPARE PAIR FROM EACH VFD TO CONTROL PANEL

SEE M209

SEE ABB SUBMITTAL AND INSTALLATION & SETUP MANUALS

REV.	DESCRIPTION	DATE	BY
3			
2	ADD PANEL TERM, TS1	9/2/11	PH
1	REVISE COMMENT	3/10/11	PH

Building Systems & Services, Inc.
270 US Highway 206, Suite 307
Flanders, NJ 07836
973-927-3150

DATE: 1/3/11

P-5.01 & P-5.02 VFDs

JOB NAME: TERMINAL B REHABILITATION OF SATELLITE B-2
NEWARK LIBERTY INTERNATIONAL AIRPORT
NEWARK, NJ

CONTRACTOR: J. MOORE & CO.
118 NAYLON AVE.
LIVINGSTON, NJ 07039

DRAWN BY	DWG NO	REV
PFH	PH010311-1G	2

SCALE	REV DATE: 9/2/11	SHEET
None		7 OF 21

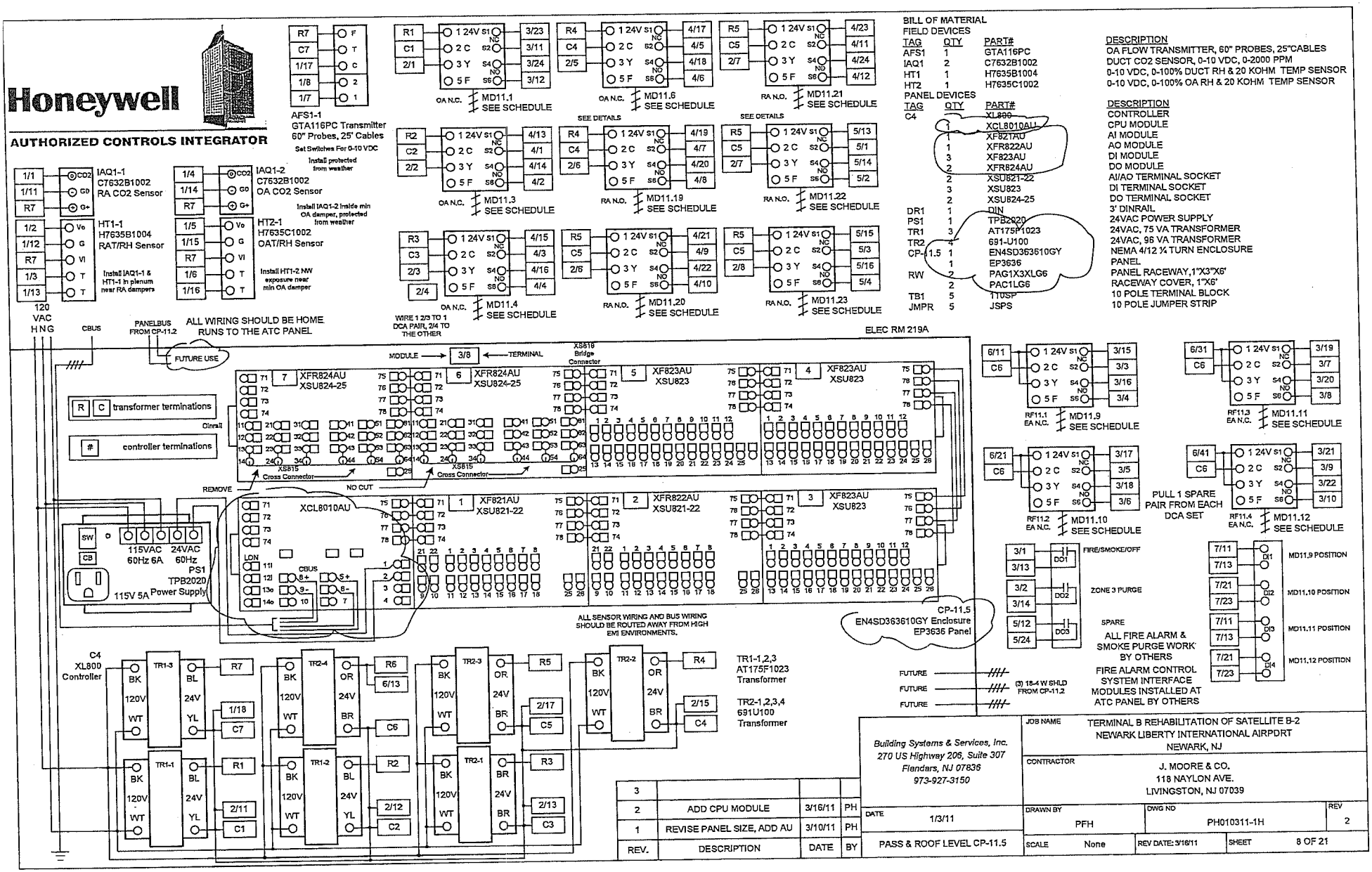

BILL OF MATERIAL

FIELD DEVICES

TAG	QTY	PART#	DESCRIPTION
AFS1	1	GTA116PC	OA FLOW TRANSMITTER, 60" PROBES, 25"CABLES
IAQ1	2	C7632B1002	DUCT CO2 SENSOR, 0-10 VDC, 0-2000 PPM
HT1	1	H7635B1004	0-10 VDC, 0-100% DUCT RH & 20 KOHM TEMP SENSOR
HT2	1	H7635C1002	0-10 VDC, 0-100% OA RH & 20 KOHM TEMP SENSOR

PANEL DEVICES

TAG	QTY	PART#	DESCRIPTION
C4	1	XL800	CONTROLLER
	1	XCL8010AU	CPU MODULE
	1	XF82TAU	AI MODULE
	1	XFR822AU	AO MODULE
	3	XF823AU	DI MODULE
	2	XFR824AU	DO MODULE
	2	XSU821-22	AI/AO TERMINAL SOCKET
	3	XSU823	DI TERMINAL SOCKET
	2	XSU824-25	DO TERMINAL SOCKET
DR1	1	DIN	3' DINRAIL
PS1	1	TPB2020	24VAC POWER SUPPLY
TR1	3	AT175F1023	24VAC, 75 VA TRANSFORMER
TR2	4	691-U100	24VAC, 96 VA TRANSFORMER
CP-11.5	1	EN4SD363610GY	NEMA 4/12 ¼ TURN ENCLOSURE
	1	EP3636	PANEL
RW	2	PAG1X3XLG6	PANEL RACEWAY,1"X3"X6'
	2	PAC1LG6	RACEWAY COVER, 1"X6'
TB1	5	110SP	10 POLE TERMINAL BLOCK
JMPR	5	JSPS	10 POLE JUMPER STRIP

REV.	DESCRIPTION	DATE	BY
3			
2	ADD CPU MODULE	3/16/11	PH
1	REVISE PANEL SIZE, ADD AU	3/10/11	PH

Building Systems & Services, Inc.
270 US Highway 206, Suite 307
Flanders, NJ 07836
973-927-3150

DATE 1/3/11

PASS & ROOF LEVEL CP-11.5

JOB NAME: TERMINAL B REHABILITATION OF SATELLITE B-2
NEWARK LIBERTY INTERNATIONAL AIRPORT
NEWARK, NJ

CONTRACTOR: J. MOORE & CO.
118 NAYLON AVE.
LIVINGSTON, NJ 07039

DRAWN BY	DWG NO	REV
PFH	PH010311-1H	2

SCALE: None | REV DATE: 3/16/11 | SHEET: 8 OF 21

Honeywell

AUTHORIZED CONTROLS INTEGRATOR

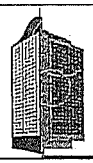

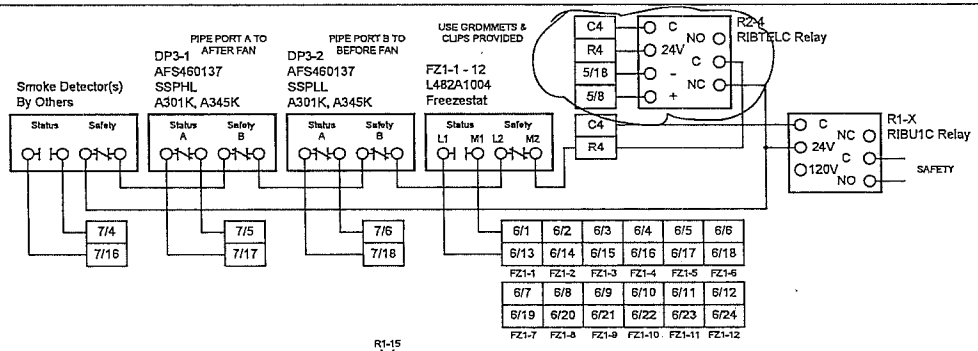

[#] controller terminations

[R] [C] transformer terminations

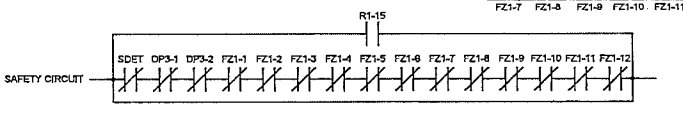

SAFETY CIRCUIT DETAIL

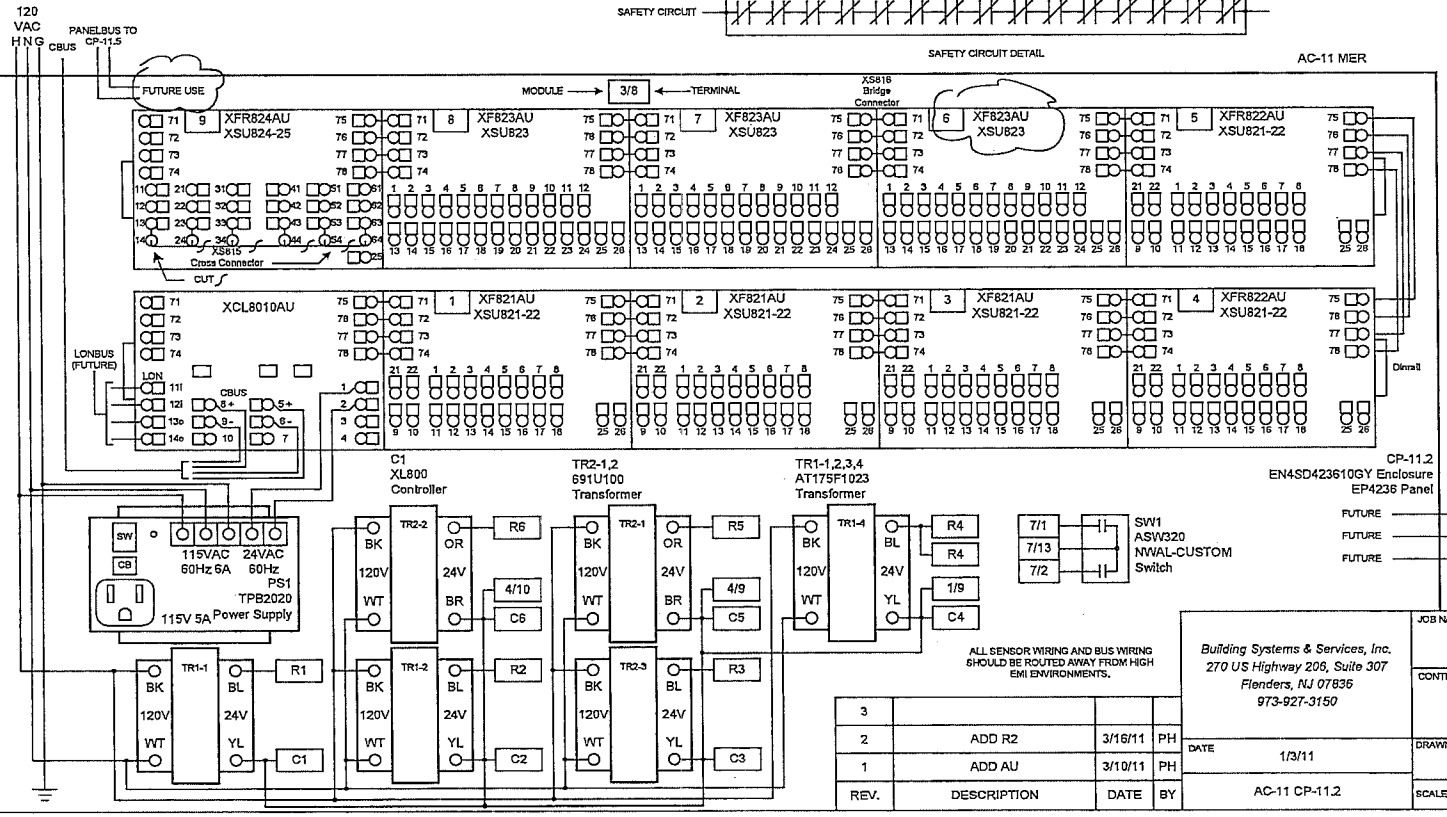

ALL SENSOR WIRING AND BUS WIRING SHOULD BE ROUTED AWAY FROM HIGH EMI ENVIRONMENTS.

REV.	DESCRIPTION	DATE	BY
3			
2	ADD R2	3/16/11	PH
1	ADD AU	3/10/11	PH

Building Systems & Services, Inc.
270 US Highway 206, Suite 307
Flanders, NJ 07836
973-927-3150

DATE 1/3/11

AC-11 CP-11.2

JOB NAME: TERMINAL B REHABILITATION OF SATELLITE B-2
NEWARK LIBERTY INTERNATIONAL AIRPORT
NEWARK, NJ

CONTRACTOR: J. MOORE & CO.
118 NAYLON AVE.
LIVINGSTON, NJ 07039

DRAWN BY	DWG NO	REV
PFH	PH010311-1I	2

SCALE	REV DATE: 3/16/11	SHEET
None		9 OF 21

Honeywell

AUTHORIZED CONTROLS INTEGRATOR

INSTALL CT DOWNSTREAM OF VFD

VFDS & VFD STARTUP PROVIDED BY OTHERS

ALL FIRE ALARM & SMOKE PURGE WORK BY OTHERS

VFD AI, AO, DI, DO
Must Be Configured
2/3 (0) 2-10 VDC
7/9 (0) 4-20 ma or 2-10VDC
25/27 VFD Fault/Alarm
2/5 VFD Run
2/6 Damper ES
2/7 Safety Shutdown VFD/Bypass Modes
17/19 Damper Open

SEE ABB SUBMITTAL ANO INSTALLATION & SETUP MANUALS

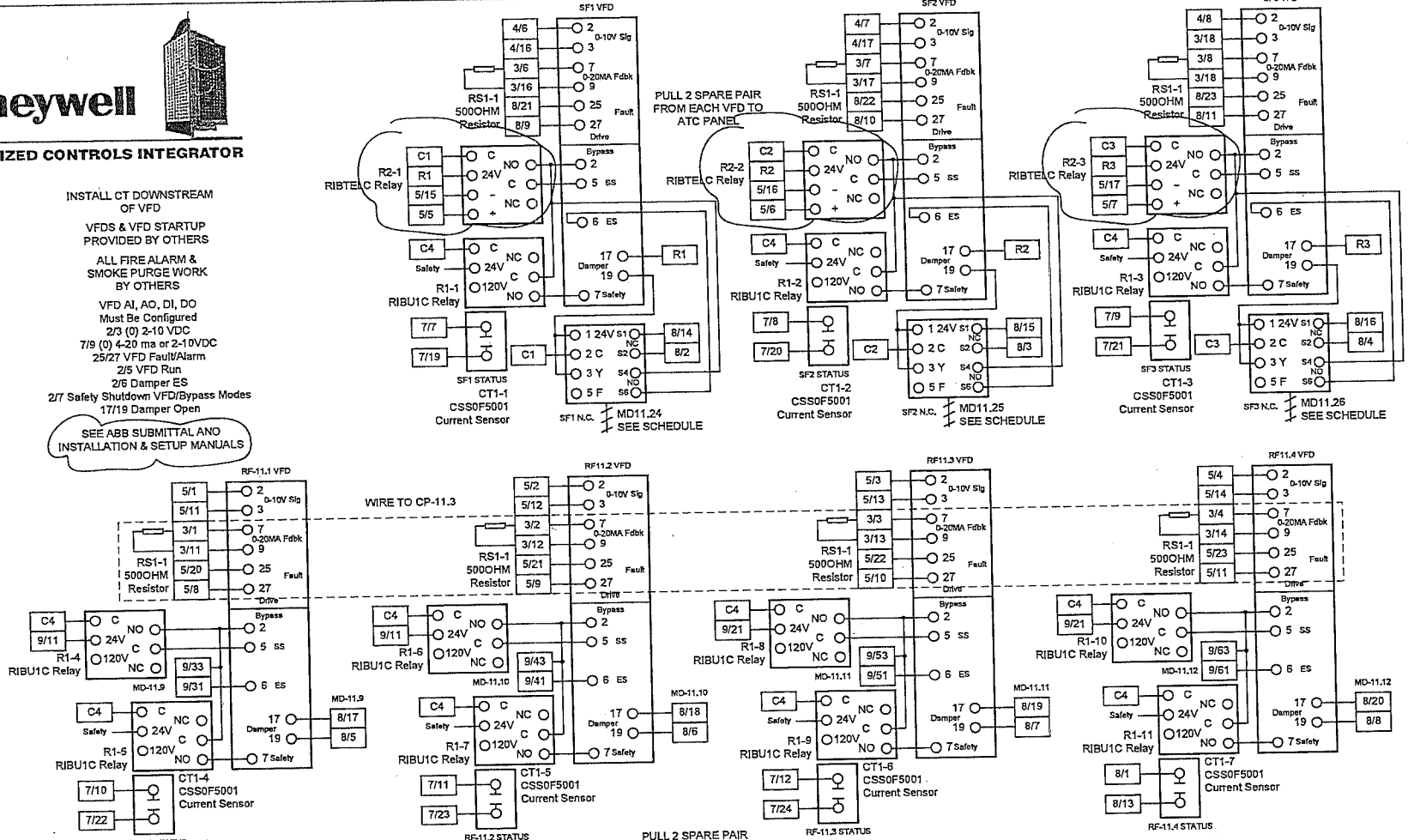

ALL WIRING SHOULD BE HOME RUNS TO THE ATC PANEL

REV.	DESCRIPTION	DATE	BY
3			
2	ADD R2	3/16/11	PH
1	REVISE COMMENTS	3/10/11	PH

Building Systems & Services, Inc.
270 US Highway 206, Suite 307
Flanders, NJ 07836
973-927-3150

DATE 1/3/11

AC-11 VFDs

JOB NAME: TERMINAL B REHABILITATION OF SATELLITE B-2
NEWARK LIBERTY INTERNATIONAL AIRPORT
NEWARK, NJ

CONTRACTOR: J. MOORE & CO.
118 NAYLON AVE.
LIVINGSTON, NJ 07039

DRAWN BY	DWG NO	REV
PFH	PH010311-1J	2

SCALE None | REV DATE: 3/16/11 | SHEET 10 OF 21

Honeywell

AUTHORIZED CONTROLS INTEGRATOR

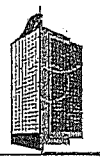

1/1 Sig — 1/11 Com — R4 Pwr — DP1-1 P7640U1040 SSPLLS Sensor

1/2 Sig — 1/12 Com — R4 Pwr — DP1-2 P7640U1040 SSPHLS Sensor — Mount 2/3 downstream in branch

1/3 Sig — 1/13 Com — R4 Pwr — DP1-3 P7640U1040 RH11.1 SSP Sensor — Mount 2/3 downstream in branch

1/4 Sig — 1/14 Com — R4 Pwr — DP1-4 P7640U1040 RH11.2 SSP Sensor — Mount 2/3 downstream in branch

1/5 Sig — 1/15 Com — R4 Pwr — DP1-5 P7640U1040 RH11.3 SSP Sensor — Mount 2/3 downstream in branch

1/6 Sig — 1/16 Com — R4 Pwr — DP1-6 P7640U1040 RH11.4 SSP Sensor — Mount 2/3 downstream in branch

1/7 Sig — 1/17 Com — R4 Pwr — DP1-7 P7640U1040 BDP Sensor (2) RPS — Lo P Cor 2005 Hi P Cor 2036 Clg Plenum

3/16 — 3/6 — DC+ — DP3-1 M264025WDC SF1 DP Sensor — PIPE BOTH PORTS TO PIEZOMETER RING

RS1-1,2,3 500OHM Resistor

3/17 — 3/7 — DC+ — DP3-2 M264025WDC SF2 DP Sensor — PIPE BOTH PORTS TO PIEZOMETER RING

3/18 — 3/8 — DC+ — DP3-3 M264025WDC SF3 DP Sensor — PIPE BOTH PORTS TO PIEZOMETER RING

WIRE TO CP-11.3

1/8 — 1/18 — TS3-1 C7041R2018 AC11 SAT Sensor

2/1 — 2/11 — TS2-1 C7041C2003 RH11.1 SAT Sensor

2/2 — 2/12 — TS2-2 C7041C2003 RH11.2 SAT Sensor

2/3 — 2/13 — TS2-3 C7041C2003 RH11.3 SAT Sensor

2/4 — 2/14 — TS2-4 C7041C2003 RH11.4 SAT Sensor

2/5 — 2/15 — TS3-2 C7041R2018 AC11 MAT Sensor

2/6 — 2/16 — TS3-3 C7041R2018 AC11 MAT Sensor

2/7 — 2/17 — TS3-4 C7041R2018 AC11 MAT Sensor

2/8 — 2/18 — TS1-1 C7041D2001 50001774-001 AC-11 CHWRT Sensor

2/4 — 2/14 — TS1-1 C7041D2001 50001774-001 AC-11 CHWST Sensor

2/5 — 2/15 — TS1-3 C7041D2001 50001774-001 HWRT11.1 Sensor

2/6 — 2/16 — TS1-4 C7041D2001 50001774-001 HWRT11.2 Sensor

2/7 — 2/17 — TS1-5 C7041D2001 50001774-001 HWRT11.3 Sensor

2/8 — 2/18 — TS1-6 C7041D2001 50001774-001 HWRT11.4 Sensor

WIRE TO CP-11.3

5/5 — 5/17 — DP2-1 1910-5 Pre Filter DP Switch (2) A301K, (2) A345K — Pipe across AC11 pre filter

5/6 — 5/18 — DP2-2 1910-5 Pre Filter DP Switch (2) A301K, (2) A345K — Pipe across AC11 final filter

5/7 — 5/19 — DP2-3 1910-5 Pre Filter DP Switch (2) A301K, (2) A345K — Pipe across AC11 carbon filter

RUN 3 WIRES TO EACH FILTER SWITCH GUAGES BY OTHERS

WIRE TO CP-11.3

R5 — 4/11 — 4/1 — 3/1 — 1 24V S1 — 2 C S2 — 3 Y S4 — 5 F S6 — TCV-14 AC-11 CHW SEE SCHEDULE

WIRE TO DCA # 2 IN SET, NOT 5 F

R5 — 4/12 — 4/2 — 3/2 — 1 24V S1 — 2 C S2 — 3 Y S4 — 5 F S6 — TCV-1 RHC-11.1 SEE SCHEDULE

WIRE TO DCA # 2 IN SET, NOT 5 F

PULL 1 SPARE PAIR FROM EACH DCA SET

SEE DETAILS

R6 — 4/13 — 4/3 — 3/3 — 1 24V S1 — 2 C S2 — 3 Y S4 — 5 F S6 — TCV-2 RHC-11.2 SEE SCHEDULE

WIRE TO DCA # 2 IN SET, NOT 5 F

R4 — 4/15 — 4/5 — 3/5 — 1 24V S1 — 2 C S2 — 3 Y S4 — 5 F S6 — TCV-4 RHC-11.4 SEE SCHEDULE

WIRE TO DCA # 2 IN SET, NOT 5 F

R6 — 4/14 — 4/4 — 3/4 — 1 24V S1 — 2 C S2 — 3 Y S4 — 5 F S6 — TCV-3 RHC-11.3 SEE SCHEOULE

WIRE TO DCA # 2 IN SET, NOT 5 F

BILL OF MATERIAL

FIELD DEVICES

TAG	QTY	PART#	DESCRIPTION
TS1	6	C7041D2001	IMMERSION TEMP SENSOR, 20KOHM
	6	50001774-001	WELL
TS2	4	C7041C2003	DUCT TEMP SENSOR, 20KOHM, 18"
TS3	4	C7041R2018	AVG DUCT TEMP SENSOR, 20 KOHM, 25'
FZ1	12	L482A1004	FREEZESTAT
	12	CCT1802	GROMMET
	12	CCT2600	CLIPS
DP1	7	P7640U1040	PRESSURE TRANSMITTER, 0-10VDC, UNI
DP3	3	M264025WDC	PRESSURE TRANSMITTER, 0-10VDC, UNI
DP2	3	1910-5	PRESSURE SWITCH, 1.5 – 5.5" WC
	8	A345K	MOUNTING BRACKET
	8	A301K	PITOT TUBE
DP3	2	AFS460137	MR DP SWITCH 2 – 12" WC
R1	11	RIBU1C	RELAY
R2	3	RIBTELC	RELAY
CT1	7	CSS0P5001	CURRENT SENSOR
POLY	1	POLY	500' ROLL OF POLY TUBING

PANEL DEVICES

TAG	QTY	PART#	DESCRIPTION
C1	1	XL800	CONTROLLER
	1	XCL8010AU	CPU MODULE
	3	XF821AU	AI MODULE
	2	XFR822AU	AO MODULE
	3	XF823AU	DI MODULE
	1	XFR824AU	DO MODULE
	5	XSU821-22	AI/AO TERMINAL SOCKET
	3	XSU823	DI TERMINAL SOCKET
	1	XSU824-25	DO TERMINAL SOCKET
DR1	1	DIN	4' DINRAIL
PS1	1	TPB2020	24VAC POWER SUPPLY
TR1	4	AT175F1023	24VAC, 75 VA TRANSFORMER
TR2	2	691-U100	24VAC, 96 VA TRANSFORMER
CP-11.2	1	EN4SD423610GY	NEMA 4/12 3 PT ENCLOSURE
	1	EP4236	PANEL
RW	3	PAG1X3XLG6	PANEL RACEWAY,1"X3"X6'
	3	PAC1LG6	RACEWAY COVER, 1"X6'
S1	1	ASW320	2 POS SELECTOR SWITCH
	1	NWAL-CUSTOM	"SUM AUTO WIN" NAMEPLATE
RS1	7	500OHM	500 OHM RESISTOR
MMI1	1	XI582AH	MMI
CBL1	1	XW982	CABLE
TB1	4	110SP	10 POLE TERMINAL BLOCK
JMPR	4	JSPS	10 POLE JUMPER STRIP

controller terminations

R C transformer terminations

ALL SENSOR WIRING AND BUS WIRING SHOULD BE ROUTED AWAY FROM HIGH EMI ENVIRONMENTS.

REV.	DESCRIPTION	DATE	BY
3			
2	REV SF DP, PNL SIZE, ADD R2	3/15/11	PH
1	ADD AU	3/10/11	PH

Building Systems & Services, Inc.
270 US Highway 206, Suite 307
Flanders, NJ 07836
973-927-3150

DATE 1/3/11

AC-11 I/O

JOB NAME: TERMINAL B REHABILITATION OF SATELLITE B-2
NEWARK LIBERTY INTERNATIONAL AIRPORT
NEWARK, NJ

CONTRACTOR: J. MOORE & CO.
118 NAYLON AVE.
LIVINGSTON, NJ 07039

DRAWN BY	DWG NO	REV
PFH	PH010311-1K	2

SCALE	REV DATE: 3/15/11	SHEET
None		11 OF 21

Honeywell

AUTHORIZED CONTROLS INTEGRATOR

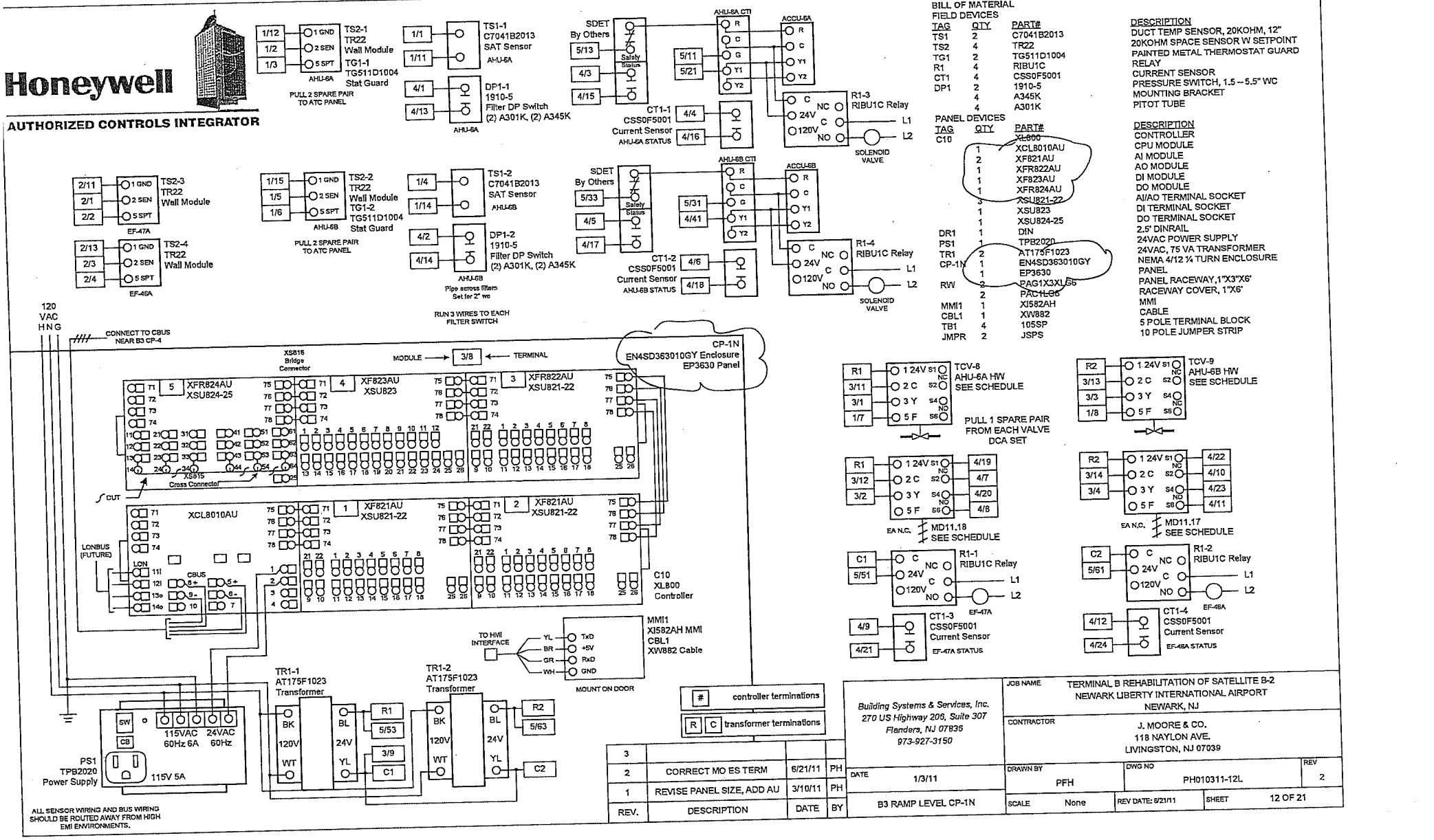

BILL OF MATERIAL

FIELD DEVICES

TAG	QTY	PART#
TS1	2	C7041B2013
TS2	4	TR22
TG1	2	TG511D1004
R1	4	RIBU1C
CT1	4	CSS0F5001
DP1	2	1910-5
	4	A345K
	4	A301K

PANEL DEVICES

TAG	QTY	PART#
C10	1	XL800
	2	XCL8010AU
	1	XF821AU
	1	XFR822AU
	1	XF823AU
	1	XFR824AU
	3	XSU821-22
	1	XSU823
	1	XSU824-25
DR1	1	DIN
PS1	1	TPB2020
TR1	2	AT175F1023
CP-1N	1	EN4SD363010GY
	1	EP3630
RW	2	PAG1X3XL56
	2	PAC1LG6
MMI1	1	XI582AH
CBL1	1	XW882
TB1	4	105SP
JMPR	2	JSPS

DESCRIPTION
DUCT TEMP SENSOR, 20KOHM, 12"
20KOHM SPACE SENSOR W SETPOINT
PAINTED METAL THERMOSTAT GUARD
RELAY
CURRENT SENSOR
PRESSURE SWITCH, 1.5 – 5.5" WC
MOUNTING BRACKET
PITOT TUBE

DESCRIPTION
CONTROLLER
CPU MODULE
AI MODULE
AO MODULE
DI MODULE
DO MODULE
AI/AO TERMINAL SOCKET
DI TERMINAL SOCKET
DO TERMINAL SOCKET
2.5" DINRAIL
24VAC POWER SUPPLY
24VAC, 75 VA TRANSFORMER
NEMA 4/12 ¼ TURN ENCLOSURE
PANEL
PANEL RACEWAY,1"X3"X6'
RACEWAY COVER, 1"X6'
MMI
CABLE
5 POLE TERMINAL BLOCK
10 POLE JUMPER STRIP

REV.	DESCRIPTION	DATE	BY
3			
2	CORRECT MO ES TERM	6/21/11	PH
1	REVISE PANEL SIZE, ADD AU	3/10/11	PH

Building Systems & Services, Inc.
270 US Highway 206, Suite 307
Flanders, NJ 07836
973-927-3150

DATE 1/3/11

B3 RAMP LEVEL CP-1N

JOB NAME: TERMINAL B REHABILITATION OF SATELLITE B-2
NEWARK LIBERTY INTERNATIONAL AIRPORT
NEWARK, NJ

CONTRACTOR: J. MOORE & CO.
118 NAYLON AVE.
LIVINGSTON, NJ 07039

DRAWN BY	DWG NO	REV
PFH	PH010311-12L	2

SCALE	REV DATE: 6/21/11	SHEET
None		12 OF 21

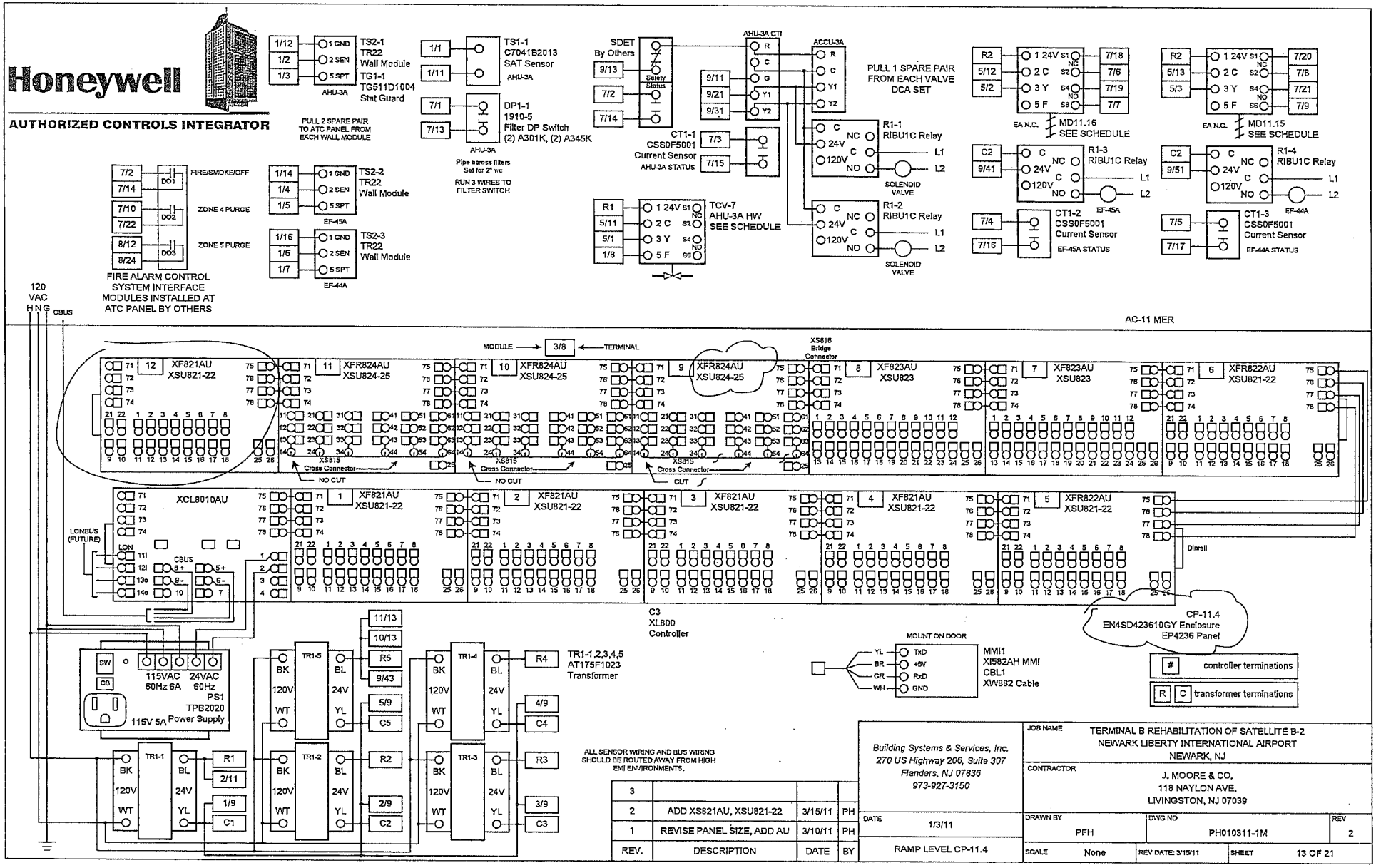

REV.	DESCRIPTION	DATE	BY
3			
2	ADD XS821AU, XSU821-22	3/15/11	PH
1	REVISE PANEL SIZE, ADD AU	3/10/11	PH

Building Systems & Services, Inc.
270 US Highway 206, Suite 307
Flanders, NJ 07836
973-927-3150

DATE 1/3/11

RAMP LEVEL CP-11.4

JOB NAME: TERMINAL B REHABILITATION OF SATELLITE B-2
NEWARK LIBERTY INTERNATIONAL AIRPORT
NEWARK, NJ

CONTRACTOR: J. MOORE & CO.
118 NAYLON AVE.
LIVINGSTON, NJ 07039

DRAWN BY	DWG NO	REV
PFH	PH010311-1M	2

SCALE None | REV DATE: 3/15/11 | SHEET 13 OF 21

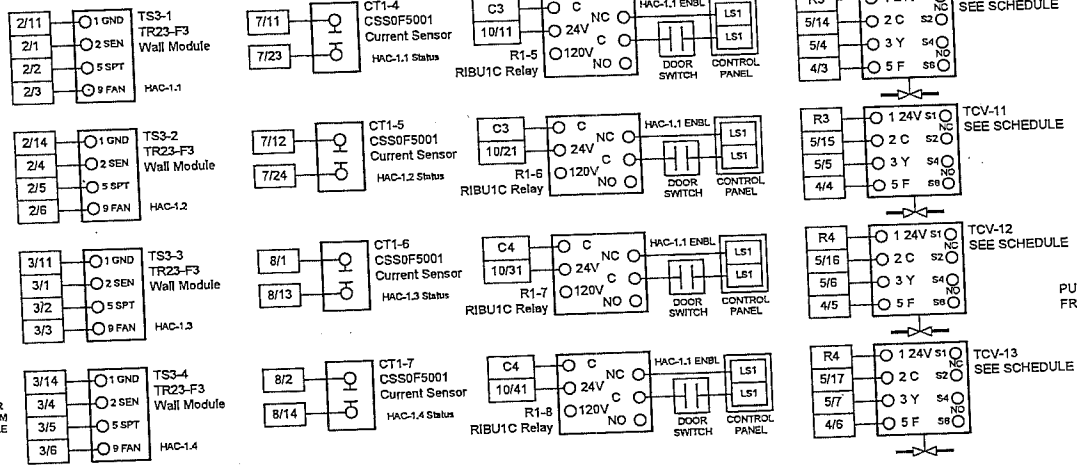

ADD DWG 21 FOR
HV-1.1 & HV-1.2
3/15/11

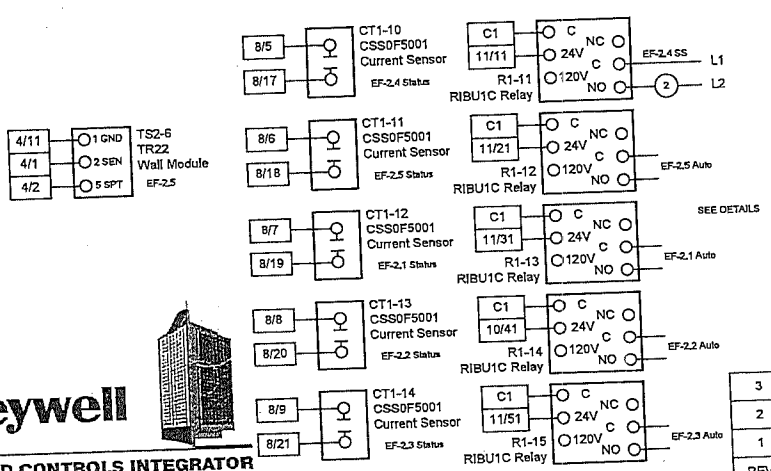

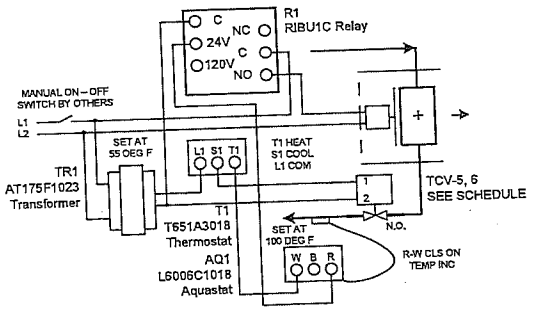

UNIT HEATER CONTROL
Typical For HWUH-1, 2

BILL OF MATERIAL

FIELD DEVICES

TAG	QTY	PART#	DESCRIPTION
TS1	3	C7041B2013	DUCT TEMP SENSOR, 20KOHM, 12"
TS2	6	TR22	20KOHM SPACE SENSOR, SETPOINT
TS3	4	TR23-F3	20KOHM SPACE SENSOR, SETPOINT, FAN
TG1	1	TG511D1004	PAINTED METAL THERMOSTAT GUARD
FZ	2	L482A1004	FREEZESTAT
R1	17	RIBU1C	RELAY
CT1	14	CSS0F5001	CURRENT SENSOR
DP1	3	1910-5	PRESSURE SWITCH, 1.5 – 5.5" WC
	6	A345K	MOUNTING BRACKET
	6	A301K	PITOT TUBE
T1	2	T651A3018	THERMOSTAT
AQ1	2	L600C1018	AQUASTAT
TR1	2	AT175F1023	24VAC, 75 VA TRANSFORMER

PANEL DEVICES

TAG	QTY	PART#	DESCRIPTION
C3	1	XL800	CONTROLLER
	1	XCL8010AU	CPU MODULE
	5	XF821AU	AI MODULE
	2	XFR822AU	AO MODULE
	2	XF823AU	DI MODULE
	3	XFR824AU	DO MODULE
	7	XSU821-22	AI/AO TERMINAL SOCKET
	2	XSU823	DI TERMINAL SOCKET
	3	XSU824-25	DO TERMINAL SOCKET
DR1	1	DIN	4" DINRAIL
PS1	1	TPB2020	24VAC POWER SUPPLY
TR1	5	AT175F1023	24VAC, 75 VA TRANSFORMER
CP-11.4	1	EN4SD423510GY	NEMA 4/12 3 PT ENCLOSURE
	1	EP4236	PANEL
RW	3	PAG1X3XLG6	PANEL RACEWAY,1"X3"X6'
	3	PAC1LG6	RACEWAY COVER, 1"X6'
MMI1	1	XI582AH	MMI
CBL1	1	XW882	CABLE
TB1	5	110SP	10 POLE TERMINAL BLOCK
JMPR	5	JSPS	10 POLE JUMPER STRIP

#	controller terminations
R C	transformer terminations

REV.	DESCRIPTION	DATE	BY
3	PAGE 21 REF	9/2/11	PH
2	ADD XF821AU, XSU821-22	3/15/11	PH
1	REVISE PANEL SIZE, ADD AU	3/10/11	PH

Honeywell

AUTHORIZED CONTROLS INTEGRATOR

Building Systems & Services, Inc.
270 US Highway 206, Suite 307
Flanders, NJ 07836
973-927-3150

DATE 1/3/11

RAMP LEVEL I/O

JOB NAME: TERMINAL B REHABILITATION OF SATELLITE B-2
NEWARK LIBERTY INTERNATIONAL AIRPORT
NEWARK, NJ

CONTRACTOR: J. MOORE & CO.
118 NAYLON AVE.
LIVINGSTON, NJ 07039

DRAWN BY	DWG NO	REV
PFH	PH010311-1N	3
SCALE: None	REV DATE: 9/2/11	SHEET: 14 OF 21

Honeywell

AUTHORIZED CONTROLS INTEGRATOR

TANDEM ACTUATOR DETAIL

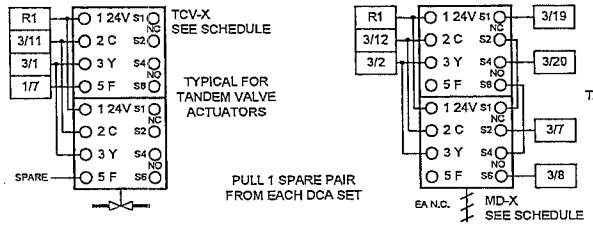

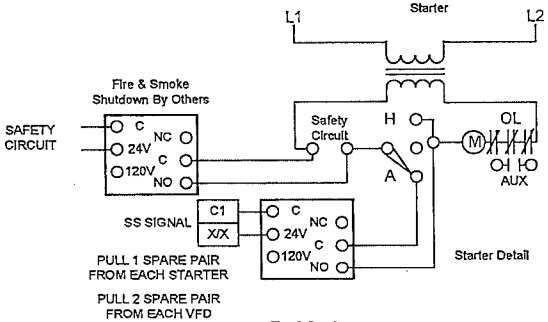

ALL FIRE ALARM WORK, SMOKE DAMPER WORK, FIRE DAMPER WORK AND SMOKE PURGE CONTROL WORK BY OTHERS

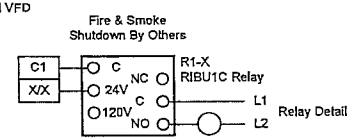

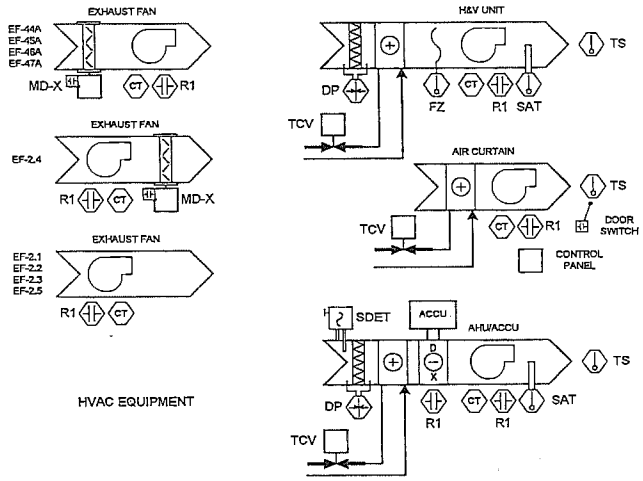

HVAC EQUIPMENT

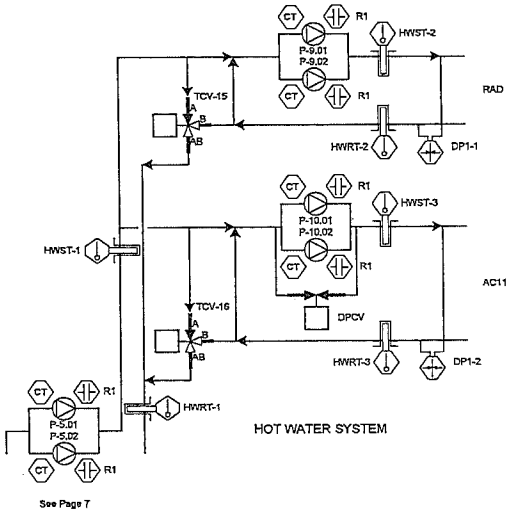

HOT WATER SYSTEM

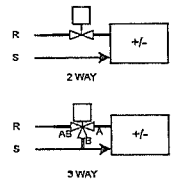

Valve Detail

FOR MULTIPLE CONTROL PANELS RESIDING IN A SINGLE MER OR ELECTRICAL ROOM, INTERCONNECT CONTROL PANELS W CONDUIT OF SUFFICIENT CAPACITY TO CARRY SPARE CONDUCTORS

THERMOSTAT GUARDS WILL BE PROVIDED FOR ONLY 3 UNITS, AHU-3A, AHU-6A, AHU-6B

ALL THERMOSTAT AND SPACE SENSOR HEIGHTS AFF MUST BE CONFIRMED BY ENGINEER

ALL FIRE ALARM WORK, SMOKE DAMPER WORK, FIRE DAMPER WORK AND SMOKE PURGE CONTROL WORK BY OTHERS

NOTE TO INSTALLER, SEE DISCONNECT/RECONNECT & TEMP COOLING NOTES ON "REMOVAL" CONTRACT DWGS

REV.	DESCRIPTION	DATE	BY
3			
2	REVISE TCV15, 16 TAG	9/2/11	PH
1	REVISE EF & P5 DETAILS	3/10/11	PH

Building Systems & Services, Inc.
270 US Highway 206, Suite 307
Flanders, NJ 07836
973-927-3150

DATE 1/3/11

DETAILS

JOB NAME: TERMINAL B REHABILITATION OF SATELLITE B-2
NEWARK LIBERTY INTERNATIONAL AIRPORT
NEWARK, NJ

CONTRACTOR: J. MOORE & CO.
118 NAYLON AVE.
LIVINGSTON, NJ 07039

DRAWN BY	DWG NO	REV
PFH	PH010311-1O	2

SCALE	REV DATE: 9/2/11	SHEET
None		15 OF 21

Honeywell

AUTHORIZED CONTROLS INTEGRATOR

MOTORIZED CONTROL DAMPERS

DAMPERS							ACTUATORS					
TAG	LOCATION	SYSTEM	W (in)	H (in)	TYPE	DAMPER	DCA	POWER	SIGNAL	TORQUE	ENDSW	QT
MD-11.1	OAI DOGHSE	AC-11 OAI	144	60	OPPOSED	D2OAB144060NAA	MS7520A2205	24 VAC	MOD	175	2	3
MD-11.3	OAI DOGHSE	AC-11 OAI	54	84	OPPOSED	D2OAB054084NAA	MS7520A2205	24 VAC	MOD	175	2	2
MD-11.4	OAI DOGHSE	AC-11 OAI	144	84	OPPOSED	D2OAB144084NAA	MS7520A2205	24 VAC	MOD	175	2	4
MD-11.6	OAI DOGHSE	AC-11 OAI	90	84	OPPOSED	D2OAB090084NAA	MS7520A2205	24 VAC	MOD	175	2	3
MD-11.7	RAMP LEVEL	EF-2.4	22	10	OPPOSED	D2OAB022010NAA**	MS7520A2205	24 VAC	MOD	175	2	1
MD-11.9	ROOF LEVEL	RF-11.1	46	46	OPPOSED	D2OAB046046NAA	MS7520A2205	24 VAC	MOD	175	2	1
MD-11.10	ROOF LEVEL	RF-11.2	46	46	OPPOSED	D2OAB046046NAA	MS7520A2205	24 VAC	MOD	175	2	1
MD-11.11	ROOF LEVEL	RF-11.3	46	46	OPPOSED	D2OAB046046NAA	MS7520A2205	24 VAC	MOD	175	2	1
MD-11.12	ROOF LEVEL	RF-11.4	46	46	OPPOSED	D2OAB046046NAA	MS7520A2205	24 VAC	MOD	175	2	1
MD-11.15	RAMP LEVEL	EF-44A	20	8	PARALLEL	D2PAB020008NAA***	MS7520A2205	24 VAC	MOD	175	2	1
MD-11.16	RAMP LEVEL	EF-45A	20	8	PARALLEL	D2PAB020008NAA***	MS7520A2205	24 VAC	MOD	175	2	1
MD-11.17	RAMP LEVEL	EF-46A	20	8	PARALLEL	D2PAB020008NAA***	MS7520A2205	24 VAC	MOD	175	2	1
MD-11.18	RAMP LEVEL	EF-47A	20	8	PARALLEL	D2PAB020008NAA***	MS7520A2205	24 VAC	MOD	175	2	1
MD-11.19	PASS CLG	AC-11 RA	48	30	OPPOSED	D2OAB048030NAA	MS7520A2205	24 VAC	MOD	175	2	1
MD-11.20	PASS CLG	AC-11 RA	120	30	OPPOSED	D2OAB120030NAA	MS7520A2205	24 VAC	MOD	175	2	1
MD-11.21	PASS CLG	AC-11 RA	60	30	OPPOSED	D2OAB060030NAA	MS7520A2205	24 VAC	MOD	175	2	1
MD-11.22	PASS CLG	AC-11 RA	72	30	OPPOSED	D2OAB072030NAA	MS7520A2205	24 VAC	MOD	175	2	1
MD-11.23	PASS CLG	AC-11 RA	132	16	OPPOSED	D2OAB132016NAA	MS7520A2205	24 VAC	MOD	175	2	1
MD-11.24	RAMP LEVEL	AC-11 SA	51	51	OPPOSED	OD-102*	MS8120A1205	24 VAC	2 POS	175	2	1
MD-11.25	RAMP LEVEL	AC-11 SA	51	51	OPPOSED	OD-102*	MS8120A1205	24 VAC	2 POS	175	2	1
MD-11.26	RAMP LEVEL	AC-11 SA	51	51	OPPOSED	OD-102*	MS8120A1205	24 VAC	2POS	175	2	1
MD-11.T	RAMP LEVEL	TEMP AHU OAI	72	60	OPPOSED	D2OAB072060NAA	MS7520A2205	24 VAC	MOD	175	2	2

*OD-102 BY AHU MFG

**9" HEIGHT NOT AVAIL

***MIN HEIGHT FOR OPPOSED BLADE IS 10"

12 GAUGE FRAMES

COMPRESSION - TYPE STAINLESS STEEL JAM SEALS

REV.	DESCRIPTION	DATE	BY
3			
2	CHG MD-11.19 – 23 OPPOSED	4/4/11	PH
1	REVISE MD-11.23 SIZE	3/10/11	PH

Building Systems & Services, Inc.
270 US Highway 206, Suite 307
Flanders, NJ 07836
973-927-3150

DATE 1/3/11

DAMPER SCHEDULE

JOB NAME TERMINAL B REHABILITATION OF SATELLITE B-2
NEWARK LIBERTY INTERNATIONAL AIRPORT
NEWARK, NJ

CONTRACTOR J. MOORE & CO.
118 NAYLON AVE.
LIVINGSTON, NJ 07039

DRAWN BY PFH

DWG NO PH010311-1P

REV 2

SCALE None

REV DATE: 4/4/11

SHEET 15 OF 21

Honeywell

AUTHORIZED CONTROLS INTEGRATOR

Total torque = TRQ # - IN x DCA QT

VALVE SCHEDULE

	VALVES											ACTUATORS							
UNIT	SERVES	QT	GPM	Cv	PD PSI	MODEL #	SIZE "	TYPE	CONFIG	CLOSEOFF PSI	TRIM	MODEL #	POWER	TRQ #-IN	SIGNAL	FAIL	FDBK	DCA QT	LINKAGE
TCV-1	RHC-11.1	1	112.0	70	3	VGF21ES25	2 1/2	FLG	2 WAY	112	SS	MS7520A2205	24 VAC	175	MOD	OPEN	YES	2	Q5022A1001
TCV-2	RHC-11.2	1	108.0	70	2	VGF21ES25	2 1/2	FLG	2 WAY	112	SS	MS7520A2205	24 VAC	175	MOD	OPEN	YES	2	Q5022A1001
TCV-3	RHC-11.3	1	141.0	70	4	VGF21ES25	2 1/2	FLG	2 WAY	112	SS	MS7520A2205	24 VAC	175	MOD	OPEN	YES	2	Q5022A1001
TCV-4	RHC-11.4	1	29.0	14.9	4	VBN2DK3S0X	1 1/4	NPT	2 WAY	100	SS	MS7520A2205	24 VAC	175	MOD	OPEN	YES	1	NA
TCV-5	HWUH-1	1	7.0	9	1	VBN2CJ3S0X	1	NPT	2 WAY	100	SS	MS7520A2205	24 VAC	175	2 POS	OPEN	NA	1	NA
TCV-6	HWUH-2	1	7.0	9	1	VBN2CJ3S0X	1	NPT	2 WAY	100	SS	MS7520A2205	24 VAC	175	2 POS	OPEN	NA	1	NA
TCV-7	AHU-3A	1	26.0	15.3	3	VBN2CL3S0X	1	NPT	2 WAY	100	SS	MS7520A2205	24 VAC	175	MOD	OPEN	YES	1	NA
TCV-8	AHU6A	1	10.0	7.4	2	VBN2BJ3S0X	3/4	NPT	2 WAY	130	SS	MS7520A2205	24 VAC	175	MOD	OPEN	YES	1	NA
TCV-9	AHU-6B	1	10.0	7.4	2	VBN2BJ3S0X	3/4	NPT	2 WAY	130	SS	MS7520A2205	24 VAC	175	MOD	OPEN	YES	1	NA
TCV-10	HAC-1.1	1	42.0	25	3	VBN2DL3S0X	1 1/4	NPT	2 WAY	100	SS	MS7520A2205	24 VAC	175	MOD	OPEN	YES	1	NA
TCV-11	HAC-1.2	1	42.0	25	3	VBN2DL3S0X	1 1/4	NPT	2 WAY	100	SS	MS7520A2205	24 VAC	175	MOD	OPEN	YES	1	NA
TCV-12	HAC-1.3	1	42.0	25	3	VBN2DL3S0X	1 1/4	NPT	2 WAY	100	SS	MS7520A2205	24 VAC	175	MOD	OPEN	YES	1	NA
TCV-13	HAC-1.4	1	42.0	25	3	VBN2DL3S0X	1 1/4	NPT	2 WAY	100	SS	MS7520A2205	24 VAC	175	MOD	OPEN	YES	1	NA
TCV-14	AHU-11	1	604.0	310	4	F6100-300SHP	4	FLG	2 WAY	150	SS/PTFE	AF24MFTSUS	24 VAC	133	MOD	CLOSED	YES	2	INTEGRAL
TCV-15	P-9.01/9.02	1	200.0	115	3	VGF31EM30	3	FLG	3 WAY	94	SS	MS7520A2205	24 VAC	175	MOD	B-AB	YES	2	Q5022A1001
TCV-16	P-10.01/10.02	1	160.0	70	5	VGF31EM25	2 1/2	FLG	3 WAY	141	SS	MS7520A2205	24 VAC	175	MOD	B-AB	YES	2	Q5022A1001
TCV-17	HV-1.1	1	64.0	30	5	VBN2EM3S0X	1 1/2	NPT	2 WAY	100	SS	MS7520A2205	24 VAC	175	MOD	OPEN	YES	1	NA
TCV-18	HV-1.2	1	64.0	30	5	VBN2EM3S0X	1 1/2	NPT	2 WAY	100	SS	MS7520A2205	24 VAC	175	MOD	OPEN	YES	1	NA
DPCV-1	P-10.01/10.04	1	275.0	159	3	F680-300SHP	3	FLG	2 WAY	150	SS/PTFE	AF24MFTSUS	24 VAC	133	MOD	CLOSED	YES	2	INTEGRAL
CHW-TCV-T	TEMP AHU	1	604.0	310	4	F6100-300SHP	4	FLG	2 WAY	150	SS/PTFE	AF24MFTSUS	24 VAC	133	MOD	CLOSED	YES	2	INTEGRAL
HWCV1 - 18	RAD	18	UNK*	4.9	NA	V5862A2070	3/4	NPT	2 WAY	58	SS/B	M6435A1004	24 VAC	40.5	MOD	OPEN	NA	18	NA

FLOW RATES OBTAINED FROM SCHEDULES & EQUIPMENT SUBMITTALS

*DATA NOT PROVIDED

ENGINEER MUST CONFIRM GPMs, PDs, FAIL POS.
TCV-14, DPCV-1 & CHW-TCV-T Cv @ 70 Deg Open

REV.	DESCRIPTION	DATE	BY
3			
2			
1	REVISE SCHEDULE	3/10/11	PH

Building Systems & Services, Inc.
270 US Highway 206, Suite 307
Flanders, NJ 07836
973-927-3150

DATE 1/3/11

VALVE SCHEDULE

JOB NAME: TERMINAL B REHABILITATION OF SATELLITE B-2
NEWARK LIBERTY INTERNATIONAL AIRPORT
NEWARK, NJ

CONTRACTOR: J. MOORE & CO.
118 NAYLON AVE.
LIVINGSTON, NJ 07039

DRAWN BY: PFH | DWG NO: PH010311-1Q | REV: 1

SCALE: None | REV DATE: 3/10/11 | SHEET: 17 OF 21

Honeywell

AUTHORIZED CONTROLS INTEGRATOR

Sequence of Operation

UNIT HEATERS

HWUH-1.1 & HWUH-1.2 will be controlled via their respective thermostats. The thermostat will cycle the fan and hot water valve to maintain temperature within the space, adjustable at the thermostat. A strap on aquastat will keep the fan from running if hot water is not available.

Existing Supplemental AC Systems

Existing supplemental AC systems AC-1 thru AC-12 will be controlled by their respective (existing) programmable thermostats. There is no interface with controls provided in this contract.

VAV TERMINAL UNITS

VAV terminal units without perimeter radiation will be indexed between the occupied and unoccupied mode from the BMS and will be controlled via their respective space temperature sensors. During the occupied cooling mode, when the zone temperature falls below the cooling setpoint (78 deg F, adjustable at the BMS front end), the controller will modulate the airflow to minimum position. As the zone temperature rises above setpoint, the controller will modulate the airflow between minimum and maximum cfm to maintain setpoint. During the occupied heating mode, when the zone temperature rises above the heating setpoint (70 deg F, adjustable at the BMS front end), the controller will modulate the airflow to minimum position. As the zone temperature falls below setpoint, the controller will modulate the airflow between minimum and maximum cfm to maintain setpoint.

VAV terminal units with perimeter radiation will be indexed between the occupied and unoccupied mode from the BMS and will be controlled via their respective space temperature sensors. During the occupied cooling mode, when the zone temperature falls below the cooling setpoint (78 deg F, adjustable at the BMS front end), the controller will modulate the airflow to minimum position. As the zone temperature rises above setpoint, the controller will modulate the airflow between minimum and maximum cfm to maintain setpoint. During the occupied heating mode, when the zone temperature rises above the heating setpoint (70 deg F, adjustable at the BMS front end), the controller will modulate the airflow to minimum position and the associated FTR control valve will close. As the zone temperature falls below setpoint, the controller will modulate the FTR control valve open to maintain setpoint. If the FTR control valve is 100% open and the heating setpoint is not satisfied, the controller will modulate the airflow between minimum and maximum cfm to maintain setpoint.

HEATING & VENTILATION UNITS

HV-1.1 and HV-1.2 will be indexed between the occupied and unoccupied modes via the time program. During the unoccupied mode, the fan will cycle and the heating valve will modulate to maintain the night setback temperature. During the occupied mode, the fan will run continuously and the heating valve will modulate to maintain setpoint, adjustable at the wall module. The controller will monitor fan status, filter status, space temperature, SAT and freezestat status. Alarms will be generated for fan failure, filter status, tripped freezestat and low space temperature.

AIR CURTAINS

HAC-1.1, HAC-1.2, HAC-1.3 & HAC-1.4 will be enabled to operate in the auto mode from the BMS. When enabled, the fan will run when the door is open (door switch makes) and the heating valve will modulate to maintain setpoint, adjustable at the wall module. If the fan HOA is in "hand", the fan will run continuously and the heating valve will modulate to maintain setpoint. A switch on the wall module will allow for fan only operation. The controller will monitor space temperature and fan status.

EDT SUPPLEMENTAL AIR HANDLING SYSTEMS

AHU-3A/ACCU-3A, AHU-6A/ACCU-6A & AHU-6B/ACCU-6B will be indexed between the occupied and unoccupied modes via the time program. During the unoccupied mode, the fan will cycle and the heating valve will modulate to maintain the night setback temperature or, the stages of cooling will energize to maintain the night setup setpoint. During the occupied mode, the fan will run continuously and the heating valve and cooling stages will sequence to maintain setpoint, adjustable at the wall module. In the event of a smoke condition, the units will be shut down. The controller will monitor fan status, filter status, space temperature and SAT. Alarms will be generated for fan failure, filter status, smoke condition and low space temperature.

TEMPORARY AHU

The Temporary AHU will be enabled from the BMS. When enabled, the fans will run continuously, the OA damper will be open to its minimum position and the chilled water valve will modulate to maintain the SAT reset setpoint, 55 deg F adjustable. The SAT setpoint will be reset up to maintain at least 1 VAV box at 90 – 100% flow when the OA dewpoint is below 54 deg F. The fan VFDs will modulate in response to a static pressure sensor located 2/3 distance down longest duct run. In the event of a smoke condition or high SSP, the unit will be shut down. The controller will monitor fan status, filter status, SSP, MAT and SAT. Alarms will be generated for fan failure, filter status, smoke condition, low MAT, low SAT and high SSP.

EF-44A, EF-45A, EF-46A, EF-47A

A wall mounted space sensor will open the exhaust air damper cycle the exhaust fan when temperature exceeds setpoint, adjustable.

EF-2.1, EF-2.2, EF-2.3, EF-2.4, EF-2.5

General exhaust fans will be enabled from the BMS and will run continuously.

TF-11.1, TF-11.2

Exhaust fans will run continuously. There is no BMS control.

HW SYSTEM

The existing BMS will control P-5.01 and P-5.02 VFDs based on HWRT-1 from the Satellite. The HWRT is set to maintain a 40 deg F adjustable differential setpoint below HWST-1. The setpoint maintained at HWST-1 is determined from an existing OAT reset schedule which is to be maintained. The lead pump will run at full speed to maintain sepoint and will reduce speed as the differential temperature decreases. When the differential temperature is less than 20 deg F, the lead pump will run at the minimum speed to maintain system flow (existing Seq.). 3 way mixing valve TCV-1 will modulate so that HWST-2 to the Radiation Zone is maintained at a 20 deg F differential below HWST-1 and that HWRT-2 is maintained at a 20 deg F differential below HWST-2. 3 way mixing valve TCV-2 will modulate so that HWST-3 to AC-11 is maintained at a 20 deg F differential below HWST-1 and that HWRT-3 is maintained at a 20 deg F differential below HWST-3. DPCV will modulate to maintain a maximum of 14 psi between the AC-11 branch HWS & HWR. Each pump will have an On-Off-Auto switch. When in the "on" position, the pump will run; when in the "off" position, the pump will shut down. When in the "auto" position, the pump will be controlled by the BMS. The lead pump from each set will be selected by the BMS. In the event that the lead pump fails, the lag pump will be started. The controller will monitor pump status, valve position, DPS, HWS temperatures. P-5.01 and P5.02 VFDs will be controlled via existing controller(s) and sequence of operation.

AHU AC-11

AC-11 will be enabled from the BMS and will operate in the Summer, Winter or Auto mode as determined in software or by a panel mounted selector switch. Summer mode is enabled when the OA enthalpy is greater than the RA enthalpy. Winter mode is enabled when the OA enthalpy is less than the RA enthalpy, OAT is less than 65 deg F and 100 deg HW is available. CHW is available from April to Nov. HW is available from Oct to Apr. When enabled in the occupied mode, RF-11.2, RF-11.2, RF-11.3 & RF-11.4 exhaust dampers will open, EAD end switches will make and the EA fans will energize at low speed. SA dampers will open simultaneously, SAD endswitches will make and the supply fan VFDs will ramp up to maintain static pressure at SSP (4). The SSP setpoint be reset up to maintain at least 1 VAV box at 90 – 100% flow. The EA VFDs will modulate to maintain the building differential pressure measure at BDP. The minimum OA damper will open and will modulate to maintain flow as measured by AFS1. The economizer function will be enabled when the RA enthalpy is greater than the OA enthalpy. When enabled the OA & RA dampers will modulate as the first stage of cooling to maintain the SAT setpoint. The OA dampers will also modulate in the demand ventilation mode to maintain the RA CO2 no greater than 530 PPM above the OA CO2. If the flow at AFS1 exceeds 90% of the combined VAV box flow, the VAV box minimum flow setpoints will be incrementally increased (5% in 15 min) until the CO2 setpoint is satisfied. Demand ventilation will be disabled in the economizer mode. During the Summer or Auto mode (Call For Cooling), the chilled water valve will modulate to maintain the reset setpoint, 51 deg F at maximum cooling demand, 70 deg F at minimum cooling demand. The initial setpoint will be 55 deg F. During the Winter or Auto mode (Call For Heating), the 4 hot water RHC valves will modulate to satisfy the average zone temperature. There will be a 2 deg F deadband between the cooling and heating modes. During the unoccupied mode, AC-11 will cycle on to maintain the night setback and night set up temperature setpoints. The OA dampers will remain closed, the economizer will be disabled and the exhaust fans will remain off. In the event of a fire/smoke condition, tripped freezestat or high and low static pressure conditions, AC-11 will be shutdown and alarms will be generated. Additional alarms will be generated for fan failure, filter status and high and low temperatures.

SMOKE PURGE

DDC controllers will monitor Zone 3, Zone 4 and Zone 5 smoke purge status commands and will provide RF-11.2, RF-11.2, RF-11.3, RF-11.4 & EF-2.4 automatic temperature control damper position status to fire alarm system. Fire alarm system modules will be installed at each ATC panel. All fire alarm work, smoke damper work, fire damper work and smoke purge control work by others.

REV.	DESCRIPTION	DATE	BY
3			
2			
1	REVISE VAV TU SEQ	3/10/11	PH

Building Systems & Services, Inc.
270 US Highway 206, Suite 307
Flanders, NJ 07836
973-927-3150

SEQUENCE OF OPERATION

DATE 1/3/11

JOB NAME TERMINAL B REHABILITATION OF SATELLITE B-2
NEWARK LIBERTY INTERNATIONAL AIRPORT
NEWARK, NJ

CONTRACTOR J. MOORE & CO.
118 NAYLON AVE.
LIVINGSTON, NJ 07039

DRAWN BY PFH

DWG NO PH010311-1R

REV 1

SCALE None

REV DATE: 3/10/11

SHEET 18 OF 21

Honeywell

AUTHORIZED CONTROLS INTEGRATOR

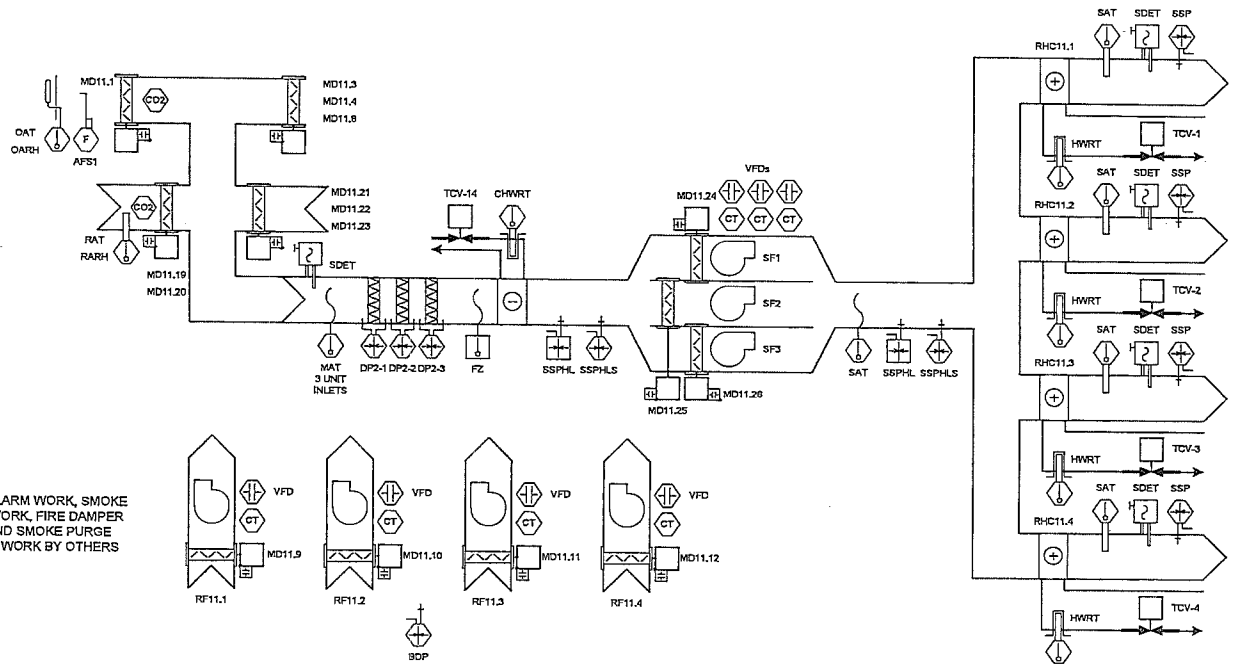

ALL FIRE ALARM WORK, SMOKE DAMPER WORK, FIRE DAMPER WORK AND SMOKE PURGE CONTROL WORK BY OTHERS

REV.	DESCRIPTION	DATE	BY
3			
2			
1			

Building Systems & Services, Inc.
270 US Highway 206, Suite 307
Flanders, NJ 07836
973-927-3150

DATE 1/3/11

AC-11 CONTROL LAYOUT

JOB NAME: TERMINAL B REHABILITATION OF SATELLITE B-2
NEWARK LIBERTY INTERNATIONAL AIRPORT
NEWARK, NJ

CONTRACTOR: J. MOORE & CO.
118 NAYLON AVE.
LIVINGSTON, NJ 07039

DRAWN BY: PFH

DWG NO: PH010311-1S

REV:

SCALE: None

REV DATE:

SHEET: 19 OF 21

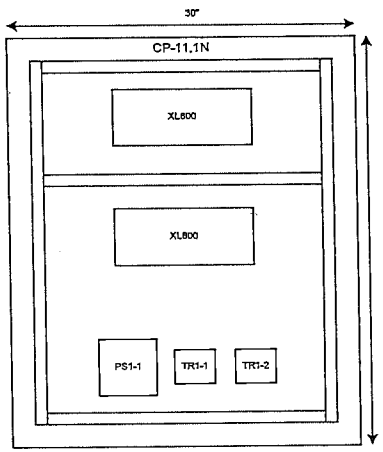

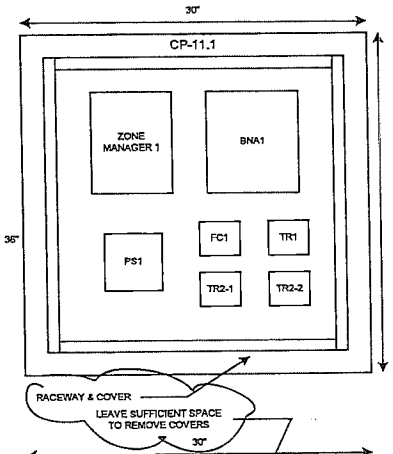

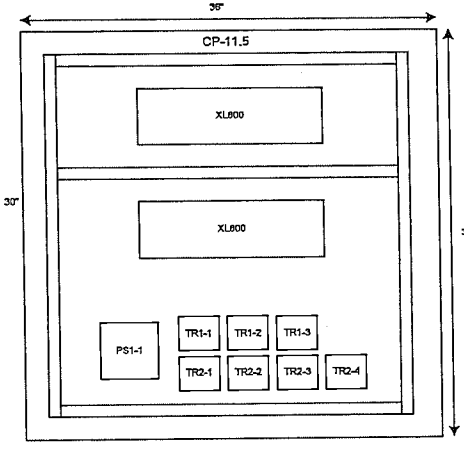

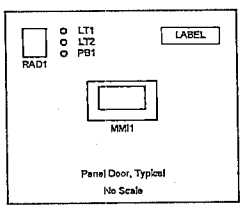

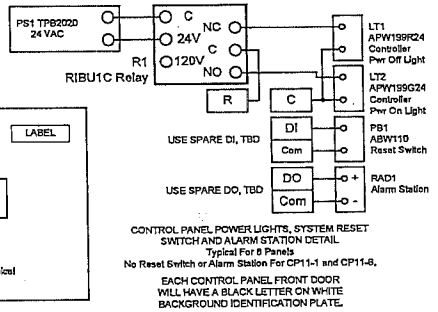

CONTROL PANEL POWER LIGHTS, SYSTEM RESET SWITCH AND ALARM STATION DETAIL
Typical For 8 Panels
No Reset Switch or Alarm Station For CP11-1 and CP11-6.

EACH CONTROL PANEL FRONT DOOR WILL HAVE A BLACK LETTER ON WHITE BACKGROUND IDENTIFICATION PLATE.

RACEWAY & COVER

LEAVE SUFFICIENT SPACE TO REMOVE COVERS

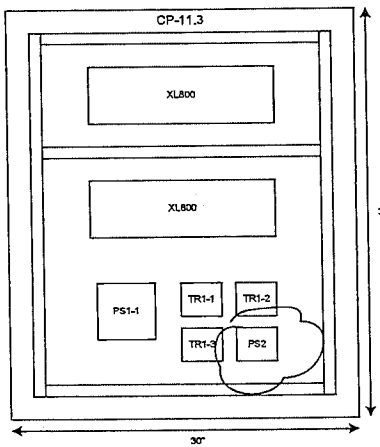

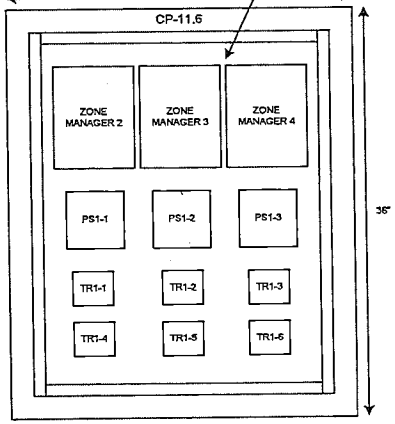

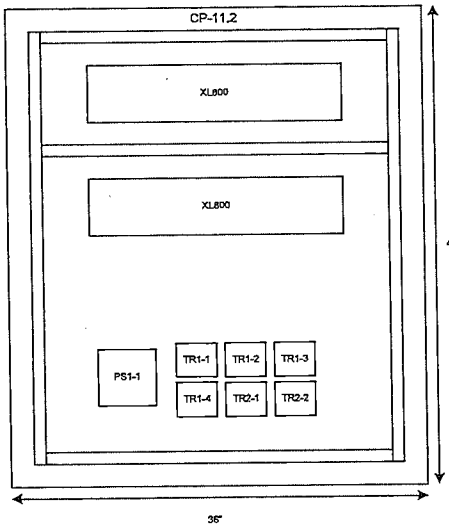

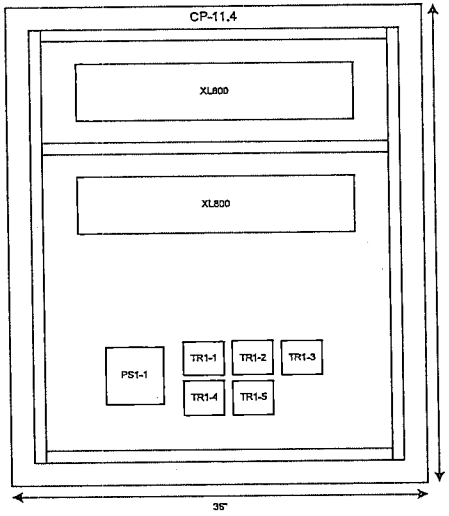

ADDED THIS DRAWING 3/10/11

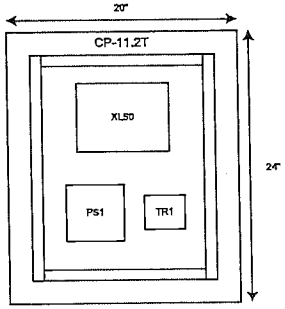

EACH CONTROL PANEL WILL HAVE SUFFICIENT TERMINALS FOR CONNECTION TO REMOTE MOUNTED CONTOL COMPONENTS PLUS 25% SPARE

BILL OF MATERIAL
PANEL DEVICES

TAG	QTY	PART#	DESCRIPTION
LT1	8	APW199R24	LIGHT, RED
LT2	8	APW199G24	LIGHT, GREEN
PB1	6	ABW110	MOMENTARY PB SWITCH
RAD1	6	RAD1	REMOTE ALARM STATION
R1	8	RIBU1C	RELAY
LBL	8	LABEL	BLACK ON WHITE ID PLATES

REV.	DESCRIPTION	DATE	BY
3			
2	REV SIZES ADD PS2 IN CP-11.3	3/15/11	PH
1	ADDED PAGE 20	3/10/11	PH

Honeywell

AUTHORIZED CONTROLS INTEGRATOR

Building Systems & Services, Inc.
270 US Highway 206, Suite 307
Flanders, NJ 07836
973-927-3150

DATE 1/3/11

CONTROL PANEL LAYOUT

JOB NAME: TERMINAL B REHABILITATION OF SATELLITE B-2
NEWARK LIBERTY INTERNATIONAL AIRPORT
NEWARK, NJ

CONTRACTOR: J. MOORE & CO.
118 NAYLON AVE.
LIVINGSTON, NJ 07039

DRAWN BY: PFH
DWG NO: PH010311-1T
REV: 2
SCALE: None
REV DATE: 3/15/11
SHEET: 20 OF 21

Honeywell

AUTHORIZED CONTROLS INTEGRATOR

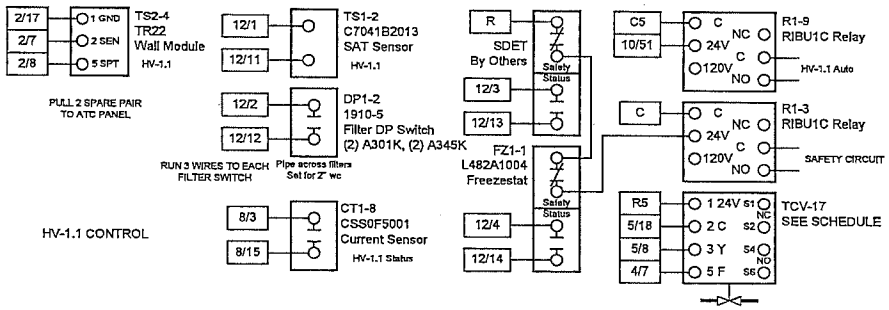

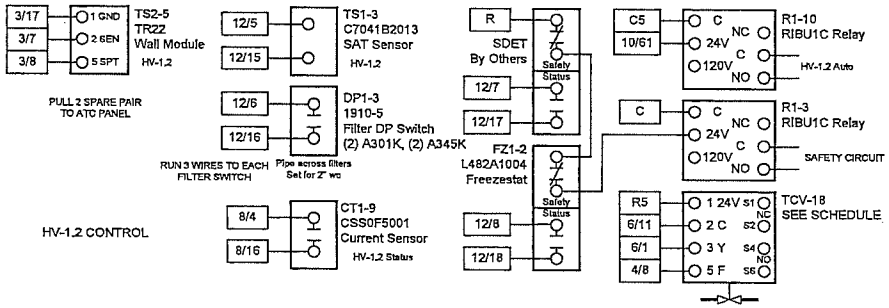

#	controller terminations
R C	transformer terminations

REV.	DESCRIPTION	DATE	BY
3			
2			
1	ADD PAGE 21	3/15/11	PH

Building Systems & Services, Inc.
270 US Highway 206, Suite 307
Flanders, NJ 07836
973-927-3150

HV-1.1 & HV-1.2 CONTROL

JOB NAME: TERMINAL B REHABILITATION OF SATELLITE B-2
NEWARK LIBERTY INTERNATIONAL AIRPORT
NEWARK, NJ

CONTRACTOR: J. MOORE & CO.
118 NAYLON AVE.
LIVINGSTON, NJ 07039

DATE	DRAWN BY	DWG NO	REV
1/3/11	PFH	PH010311-12U	1

SCALE	REV DATE: 3/15/11	SHEET
None		21 OF 21

Tag: HV-1.1 & HV-1.2

Specification: 15855

Manufacture: Trane

Drawing reference: M202

Location: B2 Ramp Level

TRANE HEATING AND VENT UNITS

REP: TRANE

PHONE: 973-887-8800

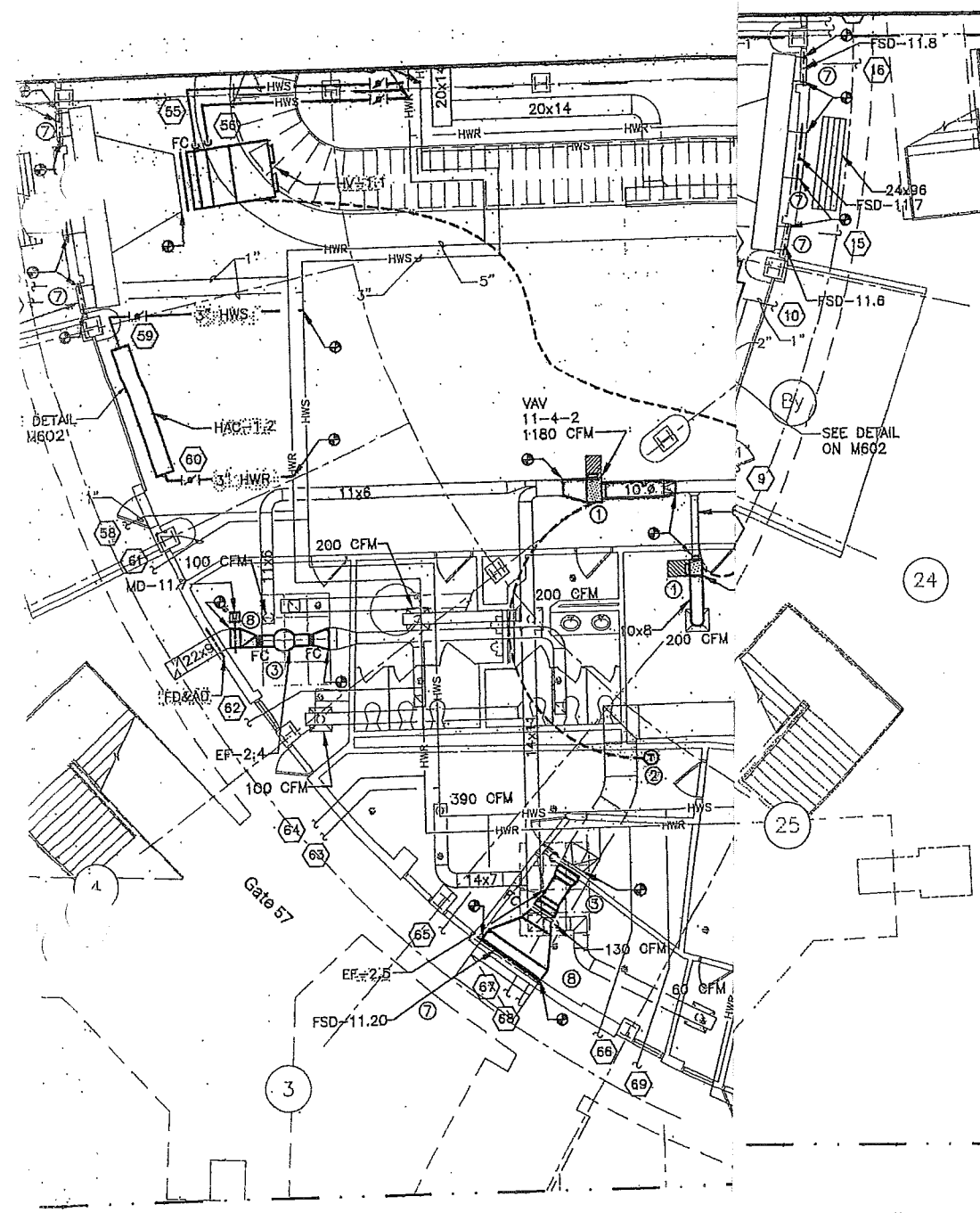

STALL VAV BOX, ASSOCIATED
INSULATION, SUPPORTS, ETC.
WITH ELECTRICAL DRAWINGS
CONTROL WIRING.

STALL TEMPERATURE SENSORS,
ELECTRICAL DRAWINGS FOR
ITROL WIRING.

STALL EXHAUST FANS
IBLE CONNECTIONS AND
RDINATE WITH ELECTRICAL
POWER AND CONTROL WIRING.

PORARILY REMOVED SECTION OF
TWORK AFTER FSD

STALL ASSOCIATED DUCTWORK,
PORTS, ETC.

TING EXHAUST GRILLE TO CFM
LANS.

STALL FIRE SMOKE DAMPERS AS
SCHEDULE.

STALL MOTORIZED DAMPERS AS

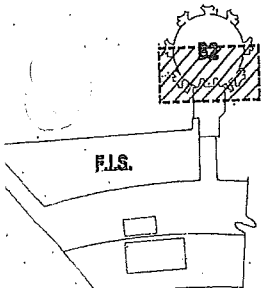

Sheet 24 of 183

THE PORT AUTHORITY OF NY & NJ

R.G. VANDERWEIL ENGINEERS, LLP

VAL LEVIN
N.J. Professional Engineer # 24GE04679600

No.	Date	Revision	Approved

ENGINEERING DEPARTMENT

NEWARK LIBERTY INTERNATIONAL AIRPORT

MECHANICAL
HVAC
Title

TERMINAL B
REHABILITATION OF SATELLITE B-2
MECHANICAL AND ELECTRICAL SYSTEMS

RAMP LEVEL PART PLAN II SATELLITE B2 INSTALLATION

This drawing subject to conditions in contract. All inventions, ideas, designs and methods herein are reserved to Port Authority and may not be used without its written consent.

All recipients of Contract documents, including bidders and those who do not bid and their prospective subcontractors and suppliers who may receive all or a part of the Contract documents or copies thereof, shall make every effort to assure the secure and appropriate disposal of the Contract documents to prevent further disclosure of the information contained in the documents. Secure and appropriate disposal includes methods of document destruction such as shredding or arrangements with refuse handlers that insure that third persons will not have access to the documents' contents either before, during or after disposal. Documents may also be returned for disposal purposes to the Contract Desk on the 3rd Floor, 3 Gateway Center, Newark NJ 07102 or the office of the Director of Procurement, One Madison Avenue, 7th Floor, New York NY 10010.
It is a violation of law for any person to alter a document in any way, unless acting under the direction of a licensed professional engineer or registered architect. If this document bearing the seal of an engineer/architect is altered, the altering engineer/architect shall affix to the document their seal and the notation "altered by" followed by their signature and the date of such alteration, and a specific description of the alteration.

J. DUMORNE	J. DUMORNE	S. CSONTOS
Designed by	Drawn by	Checked by

Date 05/12/2010

Contract Number EWR-154.081

TRANE

Installation, Operation and Maintenance

Performance Climate Changer™ Air Handlers

Indoor and Outdoor Unit Sizes 3-120

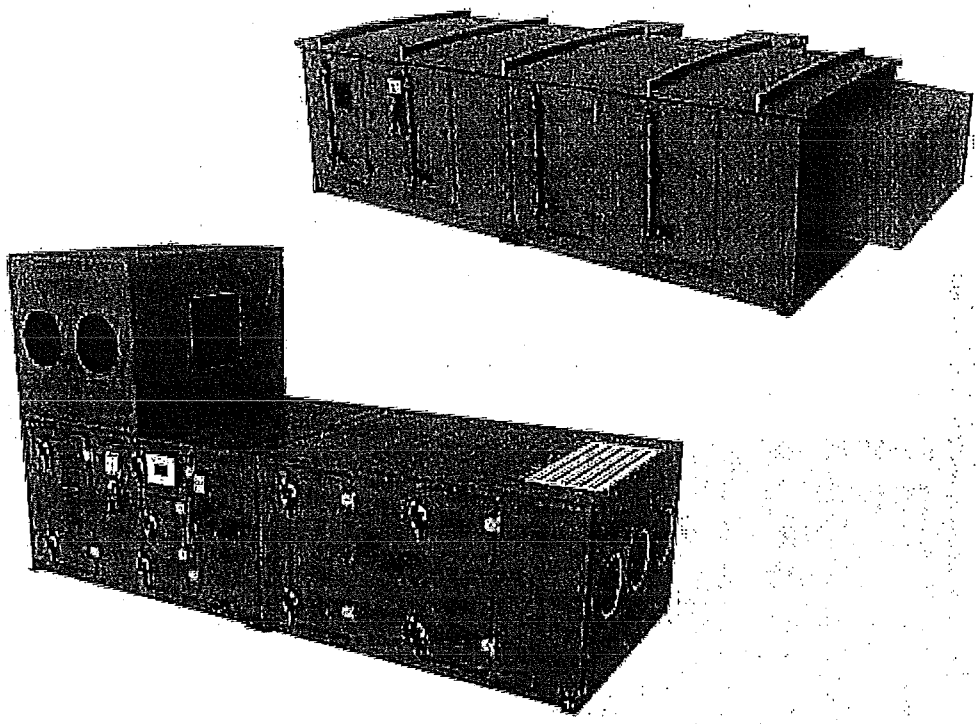

⚠SAFETY WARNING

Only qualified personnel should install and service the equipment. The installation, starting up, and servicing of heating, ventilating, and air-conditioning equipment can be hazardous and requires specific knowledge and training. Improperly installed, adjusted or altered equipment by an unqualified person could result in death or serious injury. When working on the equipment, observe all precautions in the literature and on the tags, stickers, and labels that are attached to the equipment.

X-39641152010

May 2011

CLCH-SVX07C-EN

Warnings, Cautions and Notices

Warnings, Cautions and Notices. Note that warnings, cautions and notices appear at appropriate intervals throughout this manual. Warnings are provided to alert installing contractors to potential hazards that could result in personal injury or death. Cautions are designed to alert personnel to hazardous situations that could result in personal injury, while notices indicate a situation that could result in equipment or property-damage-only accidents.

Your personal safety and the proper operation of this machine depend upon the strict observance of these precautions.

ATTENTION: Warnings, Cautions and Notices appear at appropriate sections throughout this literature. Read these carefully.

⚠ **WARNING:** Indicates a potentially hazardous situation which, if not avoided, could result in death or serious injury.

⚠ **CAUTION:** Indicates a potentially hazardous situation which, if not avoided, could result in minor or moderate injury. It could also be used to alert against unsafe practices.

NOTICE: Indicates a situation that could result in equipment or property-damage-only accidents.

Important Environmental Concerns!

Scientific research has shown that certain man-made chemicals can affect the earth's naturally occurring stratospheric ozone layer when released to the atmosphere. In particular, several of the identified chemicals that may affect the ozone layer are refrigerants that contain Chlorine, Fluorine and Carbon (CFCs) and those containing Hydrogen, Chlorine, Fluorine and Carbon (HCFCs). Not all refrigerants containing these compounds have the same potential impact to the environment. Trane advocates the responsible handling of all refrigerants-including industry replacements for CFCs such as HCFCs and HFCs.

Responsible Refrigerant Practices!

Trane believes that responsible refrigerant practices are important to the environment, our customers, and the air conditioning industry. All technicians who handle refrigerants must be certified. The Federal Clean Air Act (Section 608) sets forth the requirements for handling, reclaiming, recovering and recycling of certain refrigerants and the equipment that is used in these service procedures. In addition, some states or municipalities may have additional requirements that must also be adhered to for responsible management of refrigerants. Know the applicable laws and follow them.

Ultraviolet (UV) Germicidal Irradiation Lights!

The United States Environmental Protection Agency (EPA) believes that molds and bacteria inside buildings have the potential to cause health problems in sensitive individuals. If specified, Trane provides ultraviolet lights (UV-C) as a factory-engineered and installed option in select commercial air handling products for the purpose of reducing microbiological growth (mold and bacteria) within the equipment. When factory provided, polymer materials that are susceptible to deterioration by the UV-C light will be substituted or shielded from direct exposure to the light. In addition, UV-C radiation can damage human tissue, namely eyes and skin. To reduce the potential for inadvertent exposure to the lights by operating and maintenance personnel, electrical interlocks that automatically disconnect power to the lights are provided at all unit entry points to equipment where lights are located.

© 2011 Trane All rights reserved

⚠WARNING
Contains Refrigerant!

System contains oil and refrigerant under high pressure. Recover refrigerant to relieve pressure before opening the system. See unit nameplate for refrigerant type. Do not use non-approved refrigerants, refrigerant substitutes, or refrigerant additives.

Failure to follow proper procedures or the use of non-approved refrigerants, refrigerant substitutes, or refrigerant additives could result in death or serious injury or equipment damage.

⚠WARNING
Hazard of Explosion!

Use only dry nitrogen with a pressure regulator for pressurizing unit. Do not use acetylene, oxygen or compressed air or mixtures containing them for pressure testing. Do not use mixtures of a hydrogen containing refrigerant and air above atmospheric pressure for pressure testing as they may become flammable and could result in an explosion. Refrigerant, when used as a trace gas should only be mixed with dry nitrogen for pressurizing units. Failure to follow these recommendations could result in death or serious injury or equipment or property-only damage.

⚠WARNING
Equipment Damage From Ultraviolet (UV) Lights!

Trane does not recommend field installation of ultraviolet lights in its air handling equipment for the intended purpose of improving indoor air quality. High intensity C-band ultraviolet light is known to severely damage polymer (plastic) materials and poses a personal safety risk to anyone exposed to the light without proper personal protective equipment (could cause damage to eyes and skin). Polymer materials commonly found in HVAC equipment that may be susceptible include insulation on electrical wiring, fan belts, thermal insulation, various fasteners and bushings. Degradation of these materials can result in serious damage to the equipment.

Trane accepts no responsibility for the performance or operation of our air handling equipment in which ultraviolet devices were installed outside of the Trane factory.

⚠WARNING
Personal Protective Equipment (PPE) Required!

Installing/servicing this unit could result in exposure to electrical, mechanical and chemical hazards.

- Before installing/servicing this unit, technicians MUST put on all Personal Protective Equipment (PPE) recommended for the work being undertaken. ALWAYS refer to appropriate MSDS and OSHA guidelines for proper PPE.
- When working with or around hazardous chemicals, ALWAYS refer to appropriate MSDS and OSHA guidelines for information on allowable personal exposure levels, proper respiratory protection and handling recommendations.
- If there is a risk of arc or flash, technicians MUST put on all Personal Protective Equipment (PPE) in accordance with NFPA70E or other country-specific requirements for arc/flash protection PRIOR to servicing the unit.

Failure to follow recommendations could result in death or serious injury.

Introduction

Overview of Manual

Use this manual to install, startup, operate, and maintain the Performance Climate Changer™ air handler. Carefully review the procedures discussed in this manual to minimize installation and startup difficulties.

Nameplate

Each Performance air handler section includes one or more nameplate/label (see Figure 1), which identifies the type of section and functional components, customer tagging information, the unit serial number, the unit order number, the build-section position for installation, and the unit model number.

Note: *The unit serial number and order number is required when ordering parts or requesting service for a Trane air handler.*

Figure 1. Performance air handler section nameplate

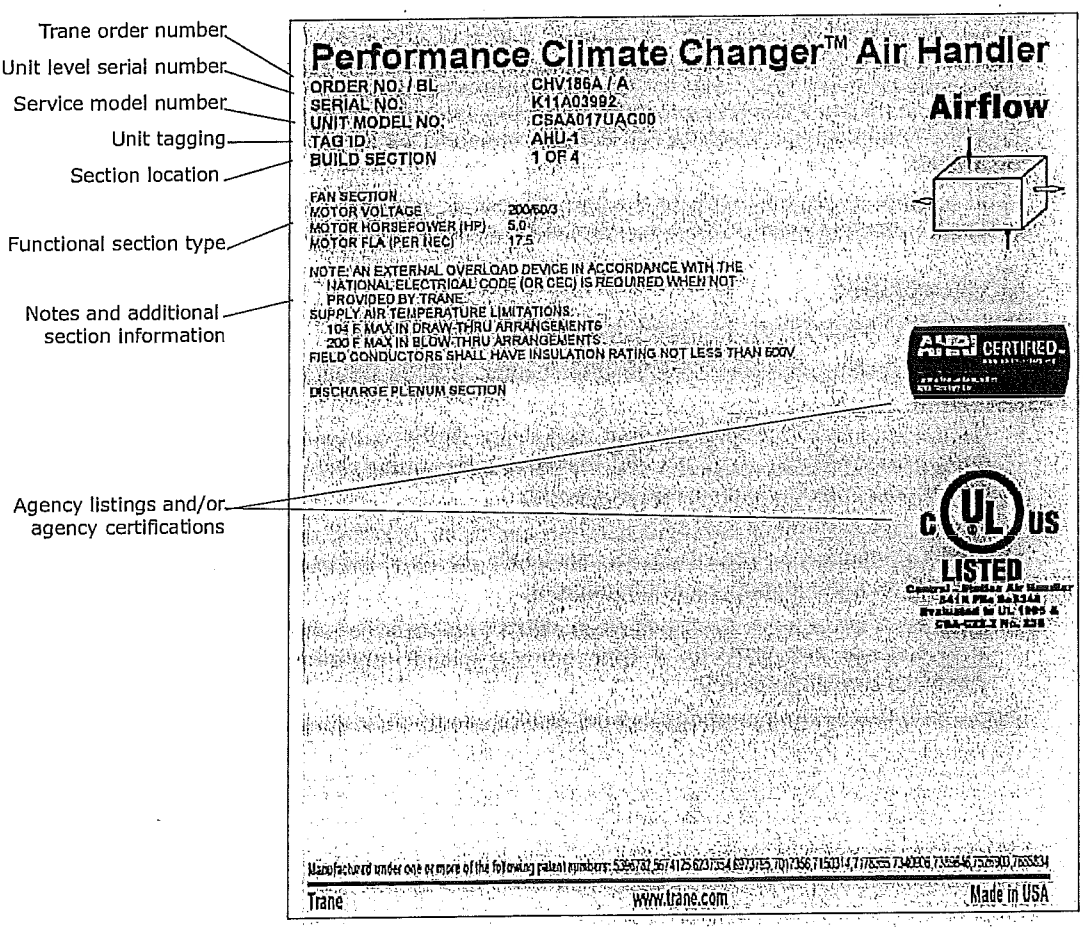

Table of Contents

Introduction 4
Overview of Manual 4
Nameplate 4
General Information 9
Operating Environment 9
Unit Description 9
Factory-Mounted Controls 9
Pre-Packaged Solutions for Controls 10
Wiring 10
Pre-Installation Requirements 11
Receiving Checklist 11
Assembly Hardware 12
Resolving Shipping Damage 12
Storage Recommendations 12
General Storage 13
Long-Term Storage 13
Outdoor Storage Considerations 13
Preparing the Unit Site 13
Roof Curb Installation Checklist 14
Unit Dimensions and Weights 16
Service Clearances 16
Fans/Motors 23
Starter/VFD Weights 23
Motor Weights 23
Installation - Mechanical 24
Lifting and Rigging 24
Remove Shipping Tie-Downs 24
General Lifting Considerations 25
Lifting Inlet and Exhaust Hoods and External Pipe Cabinet (Chase) 27
Forklifting Considerations for Indoor Units Size 3-30 28
Unit Placement and Assembly 28
Unit Placement 29
Unit Assembly 30
Ceiling Suspension for Indoor Air Handlers Sizes 3-57 30
Section-to-Section Assembly 32
Pipe Cabinet Installation 40
Outdoor Unit Weather Hood(s) 42
Indoor Dual-Path Split Dehumidification Unit (SDU)/Winterizer Assembly 43
Horizontal SDU/Winterizer Indoor Air Handler Assembly 44
Vertical SDU/Winterizer Indoor Air Handler Assembly 46

External Raceway Assembly 48
Component Installation Requirements 49
Diffuser Sections 49
Filter Sections 49
Filter Installation 50
Filter Placement 51
Fan Sections 61
Fan Isolation 61
Adjusting the Isolators 61
Seismic Isolation Requirements 62
Anchor Requirements 62
Damper Sections 64
Damper Torque Requirements 64
Opposed-Blade and Parallel-Blade Dampers 71
Duct Connections 71
Fan Discharge Connections 71
Damper Connections 72
Bottom Opening Duct Installation 73
Discharge Plenum Connections 75
Bellmouth Discharge Connections 75
Traq Damper Connections 76
External Face-and-Bypass Connections 76
Other Connections 78
Coil Piping and Connections 79
General Recommendations 79
Drain Pan Trapping 80
Steam Coil Piping 81
Water Coil Piping 83
Refrigerant Coil Piping 85
Liquid Lines 86
Suction Lines 87
Examples of Field-Installed Evaporator Piping 89
Installation - Electrical 95
Quick Connects 99
Controls Interface 100
Connecting the operator display 100
Setting up the operator display 100
Calibrating the operator display 101
Adjusting brightness and contrast 101
External communications port 101

Start-Up 102
Pre-Startup Checklist 102
General Checks 102
Fan-Related Checks 103
Coil-Related Checks 103
Motor-Related Checks 104
Unit Operation 104
Calculate Motor Voltage Imbalance 105
Tension the Fan Belt 106
Determine Fan Speed 107
Align Fan and Motor Sheaves 108
Check Multiple Belts 108
Airflow Measuring Systems 109
Traq™ Dampers 109
Fan Inlet Airflow Measuring System 114
Wiring 114
Transmitter Calibration 114
Constant Factor K 115
External Insulating Requirements 117
Troubleshooting 118
Routine Maintenance 120
Maintenance Checklist 120
Air Filters 121
Throwaway Filters 121
Permanent Filters 121
Cartridge or Bag Filters 121
Drain Pans 121
Fans 122
Inspecting and Cleaning Fans 122
Bearing Set Screw Alignment 123
Fan Bearing Lubrication 123
Motor Bearing Lubrication 124
Fan Motor Inspection 124
Coils 124
Steam and Water Coils 124
Refrigerant Coils 125
Coil Winterization 126
Type D1, D2, WL, LL, UA, UW, UU, W, P2, P4, P8, WD, 5D, and 5W Coils . 127
Moisture Purge Cycle 127
Cleaning Non-Porous Surfaces 127
Cleaning Porous Surfaces 128

Ultraviolet (UV) Light Maintenance 128
Cleaning the Bulbs 129
Replacing the Bulbs 129
Disposal of Bulbs 130

General Information

Operating Environment

The Performance Climate Changer™ air handler is a central station air handler for indoor applications. When considering the placement of the air handler, it is important to consider the operating environment. The acceptable ambient temperature range for unit operation is -40°F to 140°F (-40°C to 60°C).

For heating applications, a special motor may be required to withstand the higher temperatures. Motors with Class B insulation are acceptable for ambient temperatures up to 104° F, while motors with Class F insulation can withstand ambient temperatures to +140° F (60° C).

Note: *Units with UL approval have a maximum ambient temperature requirement of 104°F. The customer should provide adequate freeze protection for the coils. See "Coil Winterization" on page 126 for more information.*

Unit Description

The Performance Climate Changer air handler is designed for a variety of controlled-air applications. The basic unit consists of a fan, heating and/or cooling coils, filters, and dampers.

Trane air handlers ship as complete assemblies or in sub-assemblies if shipping splits are required. Some assembly is required when the unit ships in subassemblies.

A wide variety of components is available for Trane air handlers, including numerous fan, coil, and filter options, access sections, diffusers, discharge plenums, face-and-bypass sections, UL-approved electric heat sections, humidifiers, mixing boxes, moisture eliminator sections, exhaust dampers, controls, blenders and airflow monitoring stations.

For more information, refer to the following documents, available from your local Trane sales engineer:

- CLCH-PRC015-EN, Performance Climate Changer™ air handler catalog
- CLCH-PRC016-EN, Performance Climate Changer™ air handler quick select
- CLCH-PRG003-EN, Performance Climate Changer™ air handler guide specifications
- CLCH-SLB017-EN, Performance Climate Changer™ air handler sales brochure

Factory-Mounted Controls

Trane air handlers are available with a wide selection of factory-mounted controls, including controllers, motor starters, and variable frequency drives (VFD).

Most control components are mounted inside the unit. Depending on the system configuration, this may include damper actuators, dirty filter switches, averaging temperature sensors, and low limit switches. VFDs, starters, controllers, control transformers, static pressure transducers, DC power supplies, and customer interface relays will be in enclosures mounted on the inside of the unit.

Small items that cannot be factory-mounted, such as space temperature sensors, outside air temperature sensors, and humidity sensors, will ship inside the control enclosures, or packaged and shipped inside the fan or mixing box section. Larger items are shipped inside the fan section.

Note: *All control valves ship directly to the "ship-to address" from the vendor unless another address is given on the Trane sales order.*

All factory-mounted control systems (controls that are factory-wired to a unit controller or termination strip) ordered without starters or variable-frequency drives (VFDs) are provided with 120 to 24 Vac control transformers mounted and wired in the auxiliary control panel. The customer must provide 120 Vac control power, 50/60 Hz, typically 3 amps for unit sizes 3 to 57 and 5 amps for unit sizes 66 to 100. A dedicated 15-amp circuit is recommended.

Factory-mounted control systems ordered with factory-mounted starters or VFDs are supplied with line to 24 Vac control transformers. No additional power wiring is required.

Pre-Packaged Solutions for Controls

If the air handler has been selected using one of Trane's pre-packaged solutions options for controls, there are a number of resources available to aid in commissioning and start-up of the unit. These resources include commissioning sheets, graphics and technical application notes. The technical application notes include the control sequencing, Trane Graphic Programming (TGP) and Rover set-up files for the specific unit selected. These resources are available through your local Trane sales office.

For a more in-depth understanding of controls, refer to the following manuals:

- For programmable MP580 controllers
  - CNT-SVP01A-EN
- For hardware installation
  - CNT-SVN01A-EN
- For Trane TR200 Drives
  - BAS-SVX19A-EN

Wiring

⚠ WARNING

Proper Field Wiring and Grounding Required!

All field wiring MUST be performed by qualified personnel. Improperly installed and grounded field wiring poses FIRE and ELECTROCUTION hazards. To avoid these hazards, you MUST follow requirements for field wiring installation and grounding as described in NEC and your local/ state electrical codes. Failure to follow codes could result in death or serious injury.

Entrances are generally provided for field-installation of high and low voltage wiring through a pipe/nipple connection in the unit depending on unit configuration with or without factory-mounted controls. Before installation, consider overall unit serviceability and accessibility before mounting, running wires (power), making penetrations, or mounting any components to the cabinet.

Wiring to the air handler must be provided by the installer and must comply with all national and local codes. The fan motor nameplate includes a wiring diagram. If there are any questions concerning the wiring of the motor, write down the information on the motor nameplate and contact your local Trane sales office.

Pre-Installation Requirements

Based on customer requirements, Trane air handlers can ship as complete units or as individual sections to be field assembled. Unit sizes 3-120 have an integral base frame designed with the necessary number of lift points for safe installation. Indoor air handlers sizes 3-30 are also shipped with a shipping skid designed for forklift transport.

Unless otherwise specified, Performance indoor air handlers ship in subassemblies if the total length of the units exceeds 98 inches or if the total weight exceeds the limits shown in Table 1. If either the maximum weight or maximum length is exceeded, the unit will ship in multiple pieces. See Table 2 for limits for outdoor air handlers.

Note: *These limits are based on a four-point lift.*

Table 1. Shipping length and weight limitations for indoor air handlers

Unit Size	Maximum Unit Weight (lb.)	Maximum Unit Length (in)
3–30	<2,500	98
35	<3,900	98
40	<4,300	98
50–57	<5,100	98
66-120	<8000	98

Table 2. Shipping length and weight limitations for outdoor air handlers

Unit Size	Minimum Length (in.)	Maximum Length (in.)	Maximum Weight (lb.)
3–30	24.50	360.00	8,000
35-57[1]	24.50	96.00	12,000
66-120[1]	24.50	96.00	12,000

Notes: [1]Exhaust damper section can be attached to the adjacent section even if this causes length to be greater than 96 inches, up to 118.44 inches.

Receiving Checklist

Upon receipt of the air handler(s), a thorough inspection should be performed to note any shipping damage that may have occurred and that the shipment is complete. All factory shipping protection should be removed immediately to allow complete access for the inspection. The shipping protection provided by the factory is for transit protection only and should not be used as a jobsite storage cover.

Note: *Delivery cannot be refused. Trane is not responsible for shipping damage.*

- Check all access doors to confirm that the latches and hinges are not damaged.
- Inspect the interior of each section for any internal damage.

Note: *Concealed damage must be reported within 15 days of receipt.*

- Inspect the coils for damage to the fin surface and/or coil connections.
- If the unit was ordered with factory-mounted controls, locate all sensors.

Note: *Items that cannot be factory-mounted should ship inside the control enclosures or should be packaged inside the fan or mixing box section.*

- Check all control devices attached to the unit exterior and confirm that they are not damaged.
- Manually rotate the fan wheel to ensure free movement of the shaft, bearings, and drive.
- Inspect the fan housing for any foreign objects.
- If the unit is shipped in subassemblies, locate the assembly hardware, which should be packaged and shipped inside the fan or mixing box section.
- Inspect and test all piping for possible shipping damage. Nipples may be installed on coils at the factory but should always be tightened and tested before any connections are made. Rough

handling during shipping, in addition to other factors can cause pipe connections to become loose.

Note: *Trane will not be responsible for any leak at the field connections. Coils have been factory pressure tested before shipping.*

Assembly Hardware

Trane air handlers ship with all necessary assembly hardware and gasket material. This hardware is packaged in either a clear plastic envelope or cardboard box and can be found inside the fan, mixing box, or access section. If there is not enough space inside the section, a crate or pallet will be loaded onto the bed of the truck. Check the Parts List on the Field Assembly drawing against the contents of the crate. Do not proceed with unit assembly until verification that all materials are present. Sometimes it is necessary to use more than one section to ship hardware. Please check all sections thoroughly before contacting your local Trane sales engineer to report missing hardware.

Resolving Shipping Damage

Trane air handlers ship freight-on-board (FOB), meaning that the unit belongs to the customer the moment the delivery truck leaves the factory. If damage has occurred to the unit during shipment, follow these instructions:

Note: *Trane is not responsible for shipping damage.*

1. Make specific notation, describing the damage, on the freight bill. Take photos of the damaged material if possible.
2. Report all claims of shipping damage to the delivering carrier immediately and coordinate carrier inspection if necessary.

Note: *Do not attempt to repair the unit without consulting the delivering carrier.*

3. Notify your Trane sales representative of the damage and arrange for repair.

Note: *Do not attempt to repair the unit without consulting the Trane sales representative.*

4. Keep the damaged material in the same location as it was received.

Note: *It is the receiver's responsibility to provide reasonable evidence that concealed damage was not incurred after delivery.*

Storage Recommendations

NOTICE:
Corrosion!

All factory shipping protection should be removed. This wrapping is for transit protection only and should not be used for jobsite storage.Use only canvas tarps to cover air handlers. Plastic tarps can cause condensation to form in and on the equipment, which could result in corrosion damage or wet storage stains.

Indoor air handlers and/or field-installed accessories that must be stored for a period of time before installation *must* be protected from the elements. A controlled indoor environment is recommended for proper storage.

Outdoor air handlers require no special protection for storage before installation. Keep the equipment in the original container for protection and ease of handling.

Note: *The warranty does not cover damage to the unit or controls due to negligence during storage.*

General Storage

The unit controller and all other electrical/electronic components should be stored in conditions of -20°F to 120°F and 5 to 95 percent relative humidity, non-condensing. Electrical components *are not* moisture-tolerant. Factory protective coverings should be removed prior to storage.

Long-Term Storage

For longer periods of storage, allow proper clearance around the unit to perform periodic inspection and maintenance of the equipment.

While the unit is in storage:

- Every two weeks, rotate the fan and motor shaft 30 revolutions by hand. Check for free rotation.
- Every six months, check fan shaft bearings and grease lines. Add grease using a manual grease gun following the lubrications recommendations in "Fan Bearing Lubrication" on page 123.
- Check the motor lubrication; remove and clean grease plugs and check for the presence of moisture in the grease. If moisture is present, remove the motor and send it to an authorized repair shop for bearing inspection/replacement. If no moisture if present, refer to the motor manufacturer's lubrication recommendation for proper lubrication.

Outdoor Storage Considerations

Outdoor storage is **not** recommended for units that will be installed indoors. However, when outdoor storage is necessary, several things must be done to prevent damage:

Note: *Keep the equipment on the original wooden blocks/skid for protection and ease of handling.*

- Select a well-drained area, preferably a concrete pad or blacktop surface.
- Place the unit on a dry surface or raised off the ground to assure adequate air circulation beneath the unit and to assure no portion of the unit will contact standing water at any time.
- Loosen the belt tension on the drive belts.
- Cover the unit securely with a canvas tarp.
- Do not stack units.
- Do not pile other material on the unit.

Preparing the Unit Site

- Ensure the installation site can support the total weight of the unit (see "Unit Dimensions and Weights" on page 16 for approximate section weights; refer to the unit submittals for actual weights).
- Allow sufficient space for adequate free air and necessary service access (see "Service Clearances" on page 16). Refer to submittals for specific minimums.
- Allow room for supply and return piping, ductwork, electrical connections, and coil removal.
- Ensure there is adequate height for condensate drain requirements. See "Drain Pan Trapping" on page 80.

Note: *If unit is installed in a mechanical room on a pad, inadequate height may necessitate core-drilling the floor to attain proper trap height. Insufficient height could inhibit condensate drainage and result in flooding the unit and/or equipment room.*

NOTICE:
Microbial Growth!

The floor or foundation must be level and the condensate drain at the proper height for proper coil drainage and condensate flow. Standing water and wet surfaces inside the equipment can become an amplification site for microbial growth (mold), which may cause odors and damage to the equipment and building materials.

- Confirm the roof curb or foundation of the mounting platform is level and large enough to accommodate the unit. Refer to the unit submittals for specific dimensions.
- Provide adequate lighting for maintenance personnel to perform maintenance duties.
- Provide permanent power outlets in close proximity to the unit for installation and maintenance.
- Depending upon job requirements, the customer may need to provide 120 Vac power to the unit controller. Refer to submittals for more information. A dedicated 15-amp circuit is recommended.
- Wiring for the air handler must be provided by the installer and must comply with all national and local electrical codes.
- If the unit integral base frame ceiling suspension provisions are not used, the installer/ contractor must provide a ceiling-suspended mounting frame designed to support the length, width, and weight of the entire air-handling unit. See "Ceiling Suspension for Indoor Air Handlers Sizes 3-57" on page 30 for more information.
- Rooftop curb-mounted units must be sealed tightly to the curb. Use proper sealants and roof-to-curb sealing techniques to prevent water and air leakage. Refer to CLCH-SVN05A-EN Roof Curbs for Performance Climate Changer™ Air Handlers Installation Instructions.

Note: *Preparation of the roof curb or pier mount and roof openings should be completed prior to lifting the unit to the roof.*

Roof Curb Installation Checklist

See CLCH-SVN05A-EN Roof Curbs for Performance Climate Changer™ Air Handlers Installation Instructions for information on installing roof curbs.

It is recommended that the curb be installed directly on the support members and fastened to the supports using tack welds or other equivalent methods. Properly supported decking should be installed inside the air handler section of the curb when this method is used. See Figure 2.

Figure 2. Cross section of typical curb installation on new construction

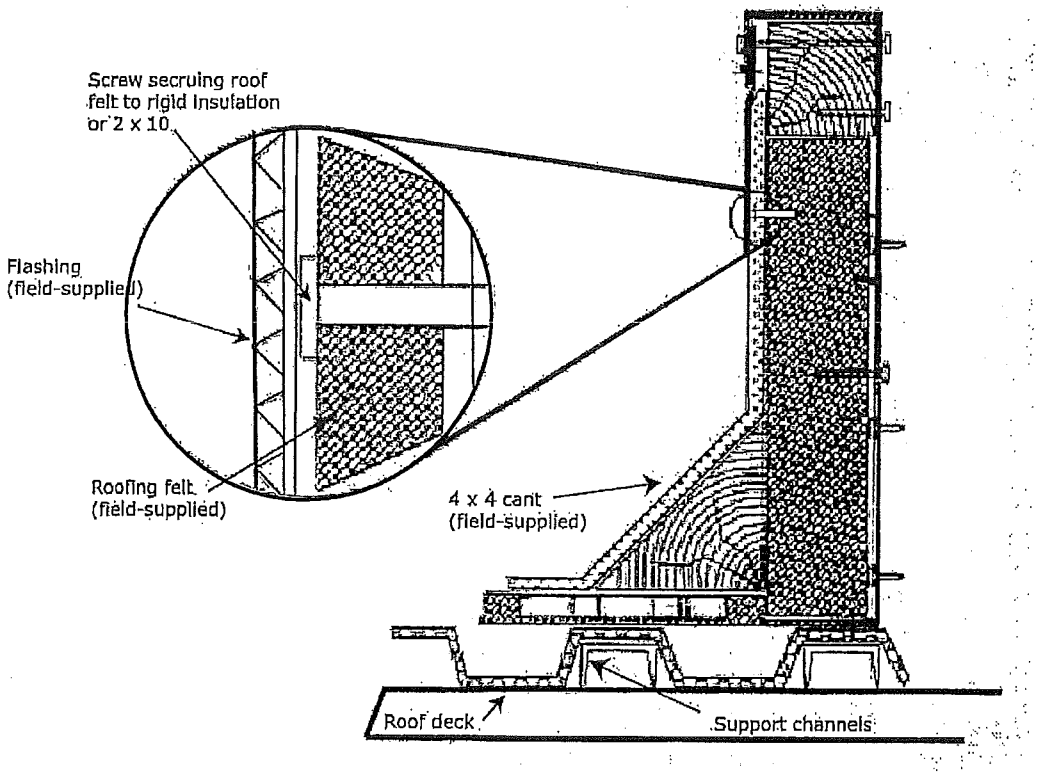

1. Verify that the roof structure can adequately support the combined weight of the unit and curb assembly.
2. Ensure that the selected installation location provides sufficient service and operational clearances.
3. Remove any twist within the curb due to roof supports and square the curb.
4. Level the curb.
5. Secure the curb to the roof support members.
6. Install 2-inch thick boards or rigid insulation around the curb.
7. Install cant strips around the curb.
8. Bring field supplied roofing felt up to the top of the curb nailing strips. Nail felt into place.
9. Install field supplied flashing under the lip of the curb flanges and over the felt.

Apply sealant to the four corners. Caulk all joints between the curb and the roof. Attach the gasket material to the curb's top flanges (entire perimeter) and to the supply and return air duct opening panel flanges.

Unit Dimensions and Weights

Note: *For specific dimensional and weight information, refer to the unit submittals. The dimensions and weights in this manual are approximate. Trane has a policy of continuous product and product data improvement and reserves the right to change design and specifications without notice.*

Service Clearances

Figure 3. Service Clearance

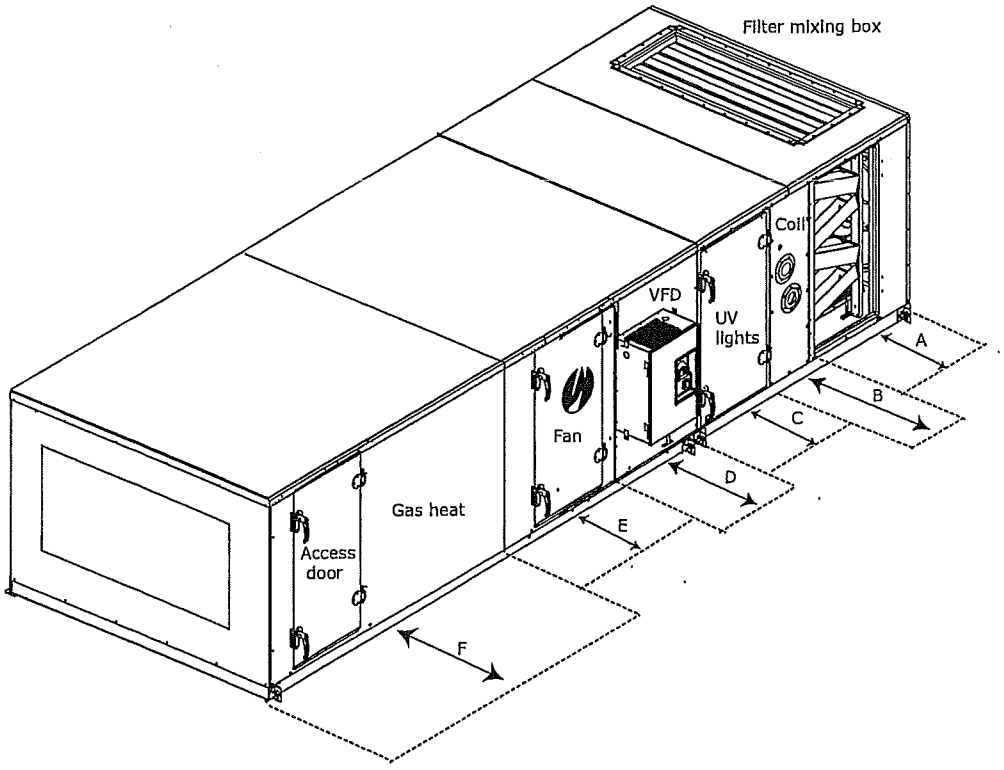

Table 3. Service clearances (inches)

Component	3	4	6	8	10	12	14	17	21	25	30	35	40	50	57	66	80	100	120
A (filter)	48	48	48	48	48	48	48	48	48	48	48	48	48	48	48	52	56	58	58
B (coil)	48	59	59	66	77	82	87	87	95	95	109	115	128	141	141	156	156	170	197
C (UV Lights)	48	48	48	48	48	48	48	48	48	48	48	48	48	48	48	52	56	58	58
D (external starter or VFD)	61	61	61	61	61	61	61	61	64	64	64	64	64	64	64	64	64	64	64
D (internal starter or VFD)	48	48	48	48	48	48	48	48	48	48	48	48	48	48	48	48	48	48	48
E (fan)	48	48	48	48	51	54	58	61	60	66	66	66	70	77	77	93	93	101	101
F (gas heat - Ext Vestibule)	N/A	N/A	89	90	108	100	100	105	115	115	118	136	140	156	156	170	179	180	N/A
F (gas heat - Int Vestibule)	N/A	N/A	56	63	74	79	84	84	92	92	106	112	125	138	138	153	153	167	194

Note: At a minimum, the above clearance dimensions are recommended on one side of the unit for regular service and maintenance. Refer to as-built submittal for locations of items such as filter access doors, coil, piping connections, motor locations, hoods, pipe cabinets, etc. Sufficient clearance must be provided on all sides of unit for removal of access panels, plug panels, or section-to-section attachment brackets. Clearance for starters, VFDs, or other high-voltage devices must be provided per NEC requirements.

Note: *Add 0.19 inches to total unit length for each shipping split to account for gasketing.*

Table 4. Section dimensions (inches) and weights (pounds) - unit sizes 3-30

Nominal airflow[1]	1500	2,000	3000	4000	5000	6000	7000	8500	10,500	12,500	15,000
Airflow at 625 fpm[2]	2169	3475	4338	4581	6075	8331	9025	11,806	13,456	16,944	19,025
Unit size	**3**	**4**	**6**	**8**	**10**	**12**	**14**	**17**	**21**	**25**	**30**
Height - indoor unit (in.)[3]	29.00	29.00	35.25	37.75	37.75	41.50	41.50	49.00	52.75	61.50	61.50
Height - outdoor unit (in.)[4] includes base drip lip	37.30	37.45	43.70	46.20	46.20	50.33	50.33	57.83	61.58	70.33	70.33
Width (in.)	31.50	44.00	44.00	50.50	61.50	66.50	72.00	72.00	80.00	80.00	93.50
Weight add for outdoor unit (lbs/in. of unit length)	1.66	1.91	1.91	2.04	2.27	2.40	2.51	2.51	2.67	2.67	2.95
Mixing box											
-with or without angled filters	34.00	34.00	34.00	36.00	36.00	36.00	36.00	36.00	34.00	46.00	46.00
	192.59	219.00	237.28	277.86	313.45	346.29	365.78	391.36	423.13	539.50	595.82
-with top Traq dampers	36.00	41.00	41.00	44.00	42.50	42.50	42.50	44.00	50.25	56.50	56.50
	199.73	245.85	265.79	313.60	345.77	381.04	402.17	438.43	527.04	610.12	672.97
-with reduced length for airfoil dampers only	23.38	23.38	23.38	23.38	23.38	23.38	28.38	28.38	28.38	28.38	32.50
	132.81	150.12	164.65	185.54	210.93	231.01	273.01	293.45	326.35	352.21	424.41
Filters											
-2-in. or 4-in. angled	24.50	24.50	24.50	26.50	26.50	26.50	26.50	24.50	24.50	24.50	24.50
	129.35	155.03	166.86	192.04	215.56	236.22	250.34	286.12	316.30	356.90	398.99
-Cartridge 12-in. or short bag 18-in.	24.50	24.50	24.50	26.50	26.50	26.50	26.50	24.50	24.50	24.50	24.50
	101.83	121.39	130.06	152.86	171.58	192.72	204.20	203.82	222.30	249.79	275.06
-2-in. or 4-in. flat	14.00	14.00	14.00	14.00	14.00	14.00	14.00	14.00	14.00	14.00	14.00
	68.56	82.62	88.08	99.49	111.80	124.66	131.47	136.82	152.24	164.95	183.13
-2-in. and 4-in. combination flat	19.00	19.00	19.00	19.00	19.00	19.00	19.00	19.00	19.00	19.00	19.00
	86.42	103.79	110.69	124.26	139.53	161.09	171.37	179.37	198.37	224.08	247.88
-Long bag 30-in.	36.00	41.00	41.00	44.00	42.50	42.50	42.50	44.00	50.25	46.00	46.00
	133.38	174.65	187.12	219.08	237.62	268.97	283.79	306.36	369.18	379.56	415.84
-Front-load 2-in or 4-in.flat, cartridge or HEPA	40.00	40.00	40.00	40.00	40.00	40.00	40.00	40.00	40.00	40.00	40.00
	198.25	220.89	244.19	268.72	292.11	320.14	333.11	370.55	401.66	433.13	470.67
-Front-load Short Bag	45.00	45.00	45.00	45.00	45.00	45.00	45.00	45.00	45.00	45.00	45.00
	218.15	242.55	268.05	294.69	320.16	350.45	364.47	404.55	438.50	473.05	513.15
Access or blank[5]											
-Small horizontal	10.00	10.00	10.00	10.00	10.00	10.00	10.00	10.00	10.00	10.00	10.00
	48.05	57.43	60.55	66.67	74.92	80.55	84.67	88.41	96.28	100.65	110.78
-Medium horizontal	14.00	14.00	14.00	14.00	14.00	14.00	14.00	14.00	14.00	14.00	14.00
	59.91	71.18	75.25	82.74	92.66	99.61	104.57	109.45	119.10	124.79	136.97
-Extended-medium horizontal	19.00	19.00	19.00	19.00	19.00	19.00	19.00	19.00	19.00	19.00	19.00
	74.73	88.37	93.62	102.82	114.83	123.43	129.44	135.74	147.62	154.97	169.71
-Medium-large horizontal	24.50	24.50	24.50	26.50	26.50	26.50	26.50	24.50	24.50	24.50	24.50
	111.30	124.41	131.71	154.47	173.94	187.69	197.48	195.61	214.03	225.11	248.63
-Large horizontal or turning	34.00	34.00	34.00	36.00	36.00	36.00	36.00	36.00	34.00	46.00	46.00
	145.22	160.85	170.40	196.91	221.19	238.48	250.67	263.28	274.77	369.72	406.60
-Extra-large horizontal or turning	36.00	41.00	41.00	44.00	42.50	42.50	42.50	44.00	50.25	56.50	56.50
	152.36	187.71	198.92	232.65	253.52	273.22	287.07	310.34	378.68	369.72	406.60

Note: [1]Nominal airflow is based on 500 fpm through a nominal coil (i.e. 500xunit size 8=4000 cfm). [2]Airflow@625 fpm through the flat filter (maximum filter velocity). [3]Height includes standard 2.5-inch base frame for sizes 3-57 and 6-inch base frame for sizes 66-120. [4]Height includes 6-inch base frame for sizes 3-120.[5]Variable lengths available from 14-96 inches. [6]Fan section weights include the heaviest fan with the largest ODP motor available. [7]Nominal length and height shown for discharge plenums. Variable plenum height and length is available from 0.5 to 1.5 of nominal.

Table 4. Section dimensions (inches) and weights (pounds) - unit sizes 3-30

Unit size	3	4	6	8	10	12	14	17	21	25	30
Coil											
-Small horizontal (with 4-row UW)	10.00	10.00	10.00	10.00	10.00	10.00	10.00	10.00	10.00	10.00	10.00
	127.31	164.68	191.68	226.20	269.31	310.76	335.50	384.32	467.78	533.75	609.14
-Medium horizontal (with 8-row UW)	14.00	14.00	14.00	14.00	14.00	14.00	14.00	14.00	14.00	14.00	14.00
	179.86	236.36	282.91	339.38	407.35	475.70	516.37	601.64	734.68	848.92	978.12
-Extended-medium horizontal (with 8-row UW)	19.00	19.00	19.00	19.00	19.00	19.00	19.00	19.00	19.00	19.00	19.00
	196.79	255.65	303.39	361.57	431.62	501.63	544.40	631.09	772.37	889.31	1021.94
-Medium-large horizontal (with 10-row W)	24.50	24.50	24.50	26.50	26.50	26.50	26.50	26.50	26.50	26.50	26.50
	281.83	375.92	450.41	575.29	681.45	802.89	912.98	1045.42	1296.51	1509.94	1738.41
-Large horizontal or vertical (with 10-row W)	34.00	34.00	34.00	36.00	36.00	36.00	36.00	36.00	34.00	46.00	46.00
	313.98	412.58	489.32	617.44	727.56	852.16	966.23	1113.15	1368.11	1683.65	1926.83
Fan[6]											
-Belt-drive plenum fan with motor	36.00	41.00	41.00	44.00	42.50	42.50	42.50	44.00	50.25	56.50	56.50
	406.54	537.13	625.09	674.57	864.70	936.46	1052.78	1214.74	1414.95	1495.75	1736.99
-Housed fan (FC/AF/BC) with motor	36.00	41.00	41.00	44.00	42.50	42.50	42.50	44.00	50.25	56.50	56.50
	387.54	466.14	568.41	641.41	839.41	904.62	925.53	1073.07	1403.49	1535.79	1755.04
-Direct-drive plenum fan with motor	36.00	41.00	41.00	44.00	46.75	48.50	48.50	50.00	50.25	50.25	52.50
	335.20	450.11	446.52	576.33	663.63	746.10	767.31	799.69	1095.84	1182.66	1263.84
Controls section (includes largest available VFD)	24.50	24.50	24.50	24.50	24.50	24.50	24.50	24.50	24.50	24.50	24.50
	234.30	247.41	276.71	299.47	318.94	332.69	414.48	423.00	442.03	463.11	486.63
Diffuser	10.00	10.00	10.00	14.00	14.00	14.00	14.00	14.00	14.00	19.00	19.00
	53.76	63.14	68.53	90.94	100.86	116.94	121.90	129.34	143.02	185.04	199.78
Discharge plenum[7]											
-Horizontal	34.00	34.00	34.00	36.00	36.00	36.00	36.00	36.00	34.00	46.00	46.00
	150.01	185.36	196.57	230.30	251.17	270.87	284.72	307.99	376.33	367.37	404.25
-Vertical	36.00	41.00	41.00	44.00	42.50	42.50	42.50	44.00	50.25	56.50	56.50
	177.24	209.05	221.00	259.71	285.68	308.68	325.46	351.14	429.14	497.02	549.91
Blender	19.00	24.50	24.50	26.50	36.00	36.00	36.00	36.00	34.00	46.00	46.00
	94.86	132.71	146.30	173.34	238.64	264.12	276.73	303.71	323.59	427.13	470.25
Electric Heat	36.00	41.00	41.00	44.00	42.50	42.50	42.50	44.00	50.25	56.50	56.50
	261.39	309.88	335.38	449.00	471.92	500.13	513.26	627.76	705.10	857.44	898.23
Face-and-Bypass Dampers											
-Internal face-and-bypass or face damper only	19.00	19.00	19.00	19.00	19.00	19.00	19.00	19.00	19.00	19.00	19.00
	122.68	155.15	167.79	190.70	219.68	241.45	255.80	270.77	300.08	317.53	353.22
-External face-and-bypass	19.00	19.00	19.00	19.00	19.00	19.00	19.00	19.00	19.00	19.00	19.00
	105.60	129.06	141.70	157.63	178.68	199.15	209.53	224.50	248.05	265.62	291.36
Energy Wheel	n/a	52.25	52.25	52.25	54.50	57.50	57.50	57.50	55.50	55.50	57.50
	n/a	364.17	378.70	457.21	561.31	676.15	766.30	786.59	879.93	917.84	1135.01
CDQ Wheel	52.25	52.25	52.25	52.25	54.50	57.50	57.50	57.50	55.50	55.50	57.50
	284.39	406.17	420.70	484.21	661.31	756.15	884.30	905.99	1189.41	1213.44	1310.61
Integral-face-and-bypass coil											
-Less than 4 rows	n/a	26.50	26.50	26.50	26.50	26.50	26.50	26.50	26.50	26.50	26.50
	n/a	355.20	367.21	470.21	541.93	585.86	619.66	733.14	792.88	805.52	940.46
-4 rows	n/a	43.00	43.00	43.00	43.00	43.00	43.00	43.00	43.00	43.00	43.00
	n/a	543.54	559.47	723.32	834.36	900.62	950.23	1130.33	1220.11	1403.29	1443.62

Table 4. Section dimensions (inches) and weights (pounds) - unit sizes 3-30

Unit size	3	4	6	8	10	12	14	17	21	25	30
Humidifier											
-Direct Steam	14.00	14.00	14.00	14.00	14.00	14.00	14.00	14.00	14.00	14.00	14.00
	125.26	145.84	165.02	183.76	225.95	268.70	285.76	323.51	354.22	397.93	452.06
-Atmospheric	14.00	14.00	14.00	14.00	14.00	14.00	14.00	14.00	14.00	14.00	19.00
	126.77	167.88	177.85	203.32	252.08	276.18	311.72	338.64	396.01	432.20	527.53
Silencer											
-3 ft	38.00	38.00	38.00	38.00	38.00	38.00	38.00	38.00	38.00	38.00	38.00
	198.00	255.81	285.56	319.00	358.76	442.35	461.27	511.98	573.44	699.10	799.58
-5 ft	62.00	62.00	62.00	62.00	62.00	62.00	62.00	62.00	62.00	62.00	62.00
	308.14	391.33	435.77	483.40	541.16	677.72	703.65	780.18	873.34	1072.96	1214.72
2-deck or 3-deck Multizone											
- Horizontal discharge	n/a	n/a	52.00	52.00	52.00	57.00	57.00	57.00	72.00	72.00	72.00
	n/a	n/a	521.86	581.76	672.98	751.82	795.28	829.01	1074.90	1130.69	1260.57
- Vertical discharge	n/a	n/a	61.00	61.00	66.00	71.00	71.00	71.00	82.00	82.00	82.00
	n/a	n/a	615.93	676.27	832.69	922.38	966.31	1005.77	1228.90	1292.74	1418.36
UV light	14.00	14.00	14.00	14.00	14.00	14.00	14.00	14.00	14.00	14.00	14.00
	76.02	93.64	98.69	120.26	135.22	146.68	155.07	162.95	179.84	188.71	218.33
Gas heat (highest MBH)	n/a	n/a	69.00	69.00	67.00	65.00	64.00	73.00	76.00	76.00	75.00
			884.80	934.90	1042.60	1070.00	1089.00	1420.50	1294.80	1394.50	1477.70
Horizontal end cap	10.0	10.0	10.0	10.0	10.0	10.0	10.0	10.0	10.0	10.0	10.0
	59.5	68.8	72.7	80.8	91.9	99.5	105.1	110.3	121.3	127.6	142.1
Diagonal economizer for outdoor unit	45.50	49.00	49.50	48.00	53.00	53.00	56.50	52.00	62.50	57.00	62.50
	203.89	247.13	270.83	289.91	348.65	378.29	425.94	431.12	554.51	565.16	689.49
Exhaust damper section for outdoor unit	19.00	19.00	19.00	19.00	19.00	19.00	19.00	19.00	19.00	19.00	19.00
	91.70	103.30	109.30	121.00	136.07	147.60	155.50	163.30	178.90	188.10	208.20
Hoods											
- Side inlet hood (add to width) for diagonal economizer	16.63	17.88	17.38	22.25	17.38	19.38	19.38	21.38	22.63	25.63	27.75
	22.11	44.51	46.71	72.36	51.90	69.11	74.11	87.31	105.51	128.29	165.87
- Side inlet hood (add to width) for mixing box	15.38	15.38	17.50	19.75	19.75	23.00	21.13	24.75	27.75	32.13	35.25
	17.38	17.38	22.37	28.48	31.07	41.83	50.11	51.75	69.06	83.64	95.67
- Back inlet hood (add to length) for mixing box	16.63	17.88	17.38	22.25	17.38	19.38	19.38	21.38	22.63	25.63	27.75
	22.11	44.51	46.71	72.36	51.90	69.11	74.11	87.31	105.51	128.29	165.87
- Exhaust hood (add to length or width)	15.38	15.38	17.50	19.75	19.75	23.00	21.13	24.75	27.75	32.13	35.25
	12.36	12.36	15.95	20.47	21.26	29.08	29.65	34.70	45.03	58.67	67.02
Pipe cabinet weight											
15 inches long, 36 inches deep	104.00	104.00	116.00	120.00	120.00	127.00	127.00	141.00	148.00	164.00	164.00
24 inches long, 36 inches deep	122.00	122.00	135.00	140.00	140.00	147.00	147.00	162.00	170.00	187.00	187.00
48 inches long, 36 inches deep	169.00	169.00	184.00	191.00	191.00	200.00	200.00	218.00	228.00	249.00	249.00
96 inches long, 36 inches deep	263.00	263.00	284.00	293.00	293.00	305.00	305.00	331.00	343.00	373.00	373.00

Notes: *Add 0.19 inches to total unit length for each shipping split to account for gasketing.*

Table 5. Section dimensions (inches) and weights (pounds) - unit sizes 35-120

Nominal airflow[1]	17,500	20,000	25,000	28,500	33,000	40,000	50,000	60,000
Airflow at 625 fpm[2]	23,263	25,519	34,375	39,581	47,225	53,475	65,106	76,388
Unit size	35	40	50	57	66	80	100	120
Height - indoor unit (in.)[3]	67.25	67.25	75.75	85.50	92.50	107.50	119.75	119.75
Height - outdoor unit (in.)[4] includes base drip lip	76.075	76.075	85.45	95.20	102.20	117.20	129.45	129.45
Width (in.)	100.00	112.50	125.50	125.50	140.50	140.50	154.50	182.00
Weight add for outdoor unit (lbs/in. of unit length)	3.02	3.28	3.74	6.13	2.88	2.88	3.11	3.55
Mixing box								
-with or without angled filters	48.00	48.00	48.00	48.00	49.00	54.00	60.00	60.00
	784.64	877.19	980.34	1055.78	1344.75	1501.00	1772.41	2016.97
-with top Traq dampers	48.00	48.00	48.00	48.00	84.00	92.00	96.00	96.00
	917.88	1019.49	1188.45	1271.47	1812.46	2030.42	2313.89	2604.03
-with reduced length for airfoil dampers only	35.50	38.50	41.50	41.50	41.50	41.50	47.00	53.00
	635.84	716.69	845.71	845.71	1183.44	1272.94	1508.57	1773.61
Filters	24.50	24.50	27.50	27.50	27.50	27.50	27.50	27.50
-2-in. or 4-in. angled	533.86	580.66	676.42	704.29	882.20	945.62	1032.36	1136.60
-Cartridge (12-in.) or short bag (18-in.)	24.50	24.50	27.50	27.50	27.50	27.50	27.50	27.50
	428.04	438.45	549.07	566.64	775.99	807.31	927.71	1031.64
-2-in. or 4-in. flat	14.00	14.00	14.00	14.00	15.00	15.00	15.00	15.00
	294.60	319.13	353.93	379.91	533.87	560.15	623.46	699.50
-2-in. and 4-in. combination flat	19.00	19.00	19.00	19.00	19.00	19.00	19.00	19.00
	397.10	430.77	482.70	540.44	700.68	779.12	862.09	908.32
-Long bag (30-in.)	37.25	37.25	37.25	37.25	37.25	37.25	37.25	37.25
	525.02	570.65	637.71	692.97	894.76	971.09	1061.74	1125.66
-Front-load 2-in or 4-in.flat, cartridge or HEPA	40.00	40.00	40.00	40.00	40.00	40.00	40.00	40.00
	636.18	676.08	763.56	806.39	1031.28	1121.46	1250.59	1368.55
-Front-load Short Bag	45.00	45.00	45.00	45.00	45.00	45.00	45.00	45.00
	684.89	727.15	821.08	867.34	1106.39	1201.85	1337.95	1461.13
Access or blank[5]	10.00	10.00	10.00	10.00	n/a	n/a	n/a	n/a
-Small horizontal	211.11	227.92	254.69	265.35	n/a	n/a	n/a	n/a
-Medium horizontal	14.00	14.00	14.00	14.00	15.00	15.00	15.00	15.00
	241.53	260.24	290.28	302.41	430.36	449.60	493.59	549.13
-Extended-medium horizontal	19.00	19.00	19.00	19.00	19.00	19.00	19.00	19.00
	279.57	300.64	334.76	348.74	476.36	497.88	545.85	605.56
-Medium-large horizontal	24.50	24.50	24.50	24.50	24.50	24.50	24.50	24.50
	267.55	289.53	324.20	337.75	475.62	497.08	547.88	613.24
-Large horizontal or turning	48.00	48.00	48.00	48.00	49.00	54.00	60.00	60.00
	452.37	487.88	544.19	566.43	771.76	870.43	1036.54	1146.85
-Extra-large horizontal or turning	63.75	63.75	68.50	n/a	n/a	n/a	n/a	n/a
	367.83	397.14	443.56	n/a	n/a	n/a	n/a	n/a

Note: [1]Nominal airflow is based on 500 fpm through a nominal coil (i.e. 500xunit size 8=4000 cfm). [2]Airflow@625 fpm through the flat filter (maximum filter velocity). [3]Height includes standard 2.5-inch base frame for sizes 3-57 and 6-inch base frame for sizes 66-120. [4]Height includes 6-inch base frame for sizes 3-120.[5]Variable lengths available from 14-96 inches. [6]Fan section weights include the heaviest fan with the largest ODP motor available. [7]Nominal length and height shown for discharge plenums. Variable plenum height and length is available from 0.5 to 1.5 of nominal.

Table 5. Section dimensions (inches) and weights (pounds) - unit sizes 35-120

Unit size	35	40	50	57	66	80	100	120
Coils								
-Small horizontal (with 4-row UW)	10.00	10.00	10.00	10.00	n/a	n/a	n/a	n/a
	679.61	743.10	915.56	1023.99	n/a	n/a	n/a	n/a
-Medium horizontal (with 8-row UW)	14.00	14.00	14.00	14.00	15.00	15.00	15.00	15.00
	1083.29	1208.28	1543.21	1739.24	2183.23	2518.10	3045.45	3584.41
-Extended-medium horizontal (with 8-row UW)	19.00	19.00	19.00	19.00	19.00	19.00	19.00	19.00
	1137.72	1267.13	1595.08	1793.51	2237.43	2574.51	3116.83	3660.64
-Medium-large horizontal (with 10-row W)	24.50	24.50	24.50	24.50	24.50	24.50	24.50	24.50
	1944.10	2204.75	2736.01	3195.47	3838.02	4447.61	5453.04	6662.13
-Large horizontal or vertical (with 10-row W)	48.00	48.00	48.00	48.00	n/a	n/a	n/a	n/a
	2140.10	2411.83	2991.25	3459.40	n/a	n/a	n/a	n/a
Fan[6]								
-Belt-drive plenum fan with motor	53.50	53.50	57.50	59.50	61.00	63.00	73.75	82.25
	2311.19	2676.28	3178.70	3496.17	3940.63	4590.36	6035.46	7133.78
-Housed fan (FC/AF/BC) with motor	63.75	63.75	68.50	68.50	84.00	92.00	96.00	96.00
	2381.09	2641.30	3148.10	3211.05	4216.56	4980.29	5866.21	6705.45
-Direct-drive plenum fan with motor	55.50	60.00	65.00	65.00	54.75	54.75	54.75	54.75
	1648.42	1910.99	2793.74	2851.21	3433.31	3950.32	5356.05	5525.47
Controls section (includes largest available VFD)	24.50	24.50	24.50	24.50	24.50	24.50	24.50	24.50
	574.55	596.53	631.20	644.75	782.62	804.08	854.88	920.24
Diffuser	24.50	24.50	24.50	24.50	27.50	37.25	37.25	37.25
	365.56	389.25	428.01	445.57	664.01	809.34	876.54	955.28
Discharge plenum[7]								
-Horizontal	48.00	48.00	48.00	48.00	49.00	54.00	60.00	60.00
	474.26	511.01	570.20	594.26	773.17	810.80	891.34	989.20
-Vertical	63.75	63.75	68.50	n/a	n/a	n/a	n/a	n/a
	779.25	840.96	989.88	n/a	n/a	n/a	n/a	n/a
Blender	48.00	48.00	48.00	48.00	49.00	54.00	60.00	60.00
	540.76	593.46	675.51	731.75	970.30	1112.23	1345.03	1567.62
Electric Heat	n/a	n/a	n/a	n/a	n/a	n/a	n/a	n/a
	n/a	n/a	n/a	n/a	n/a	n/a	n/a	n/a
Face-and-Bypass Dampers								
-Internal face-and-bypass or face damper only	19.00	19.00	19.00	19.00	19.00	19.00	19.00	19.00
	543.64	636.11	713.60	803.86	1026.07	1107.46	1236.82	1361.55
-External face-and-bypass	22.00	22.00	22.00	22.00	39.00	39.00	39.00	39.00
	473.39	556.23	630.10	714.61	888.33	973.60	1093.88	1205.53
Energy Wheel	61.25	64.75	64.75	n/a	n/a	n/a	n/a	n/a
	1497.92	1733.76	1995.01	n/a	n/a	n/a	n/a	n/a
CDQ Wheel	56.25	56.25	58.75	n/a	n/a	n/a	n/a	n/a
	2127.92	2323.76	3275.01	n/a	n/a	n/a	n/a	n/a
Integral-face-and-bypass coil								
-Less than 4 rows	29.50	29.50	29.50	29.50	29.50	29.50	29.50	29.50
	1129.66	1168.40	1793.80	1956.80	2322.61	2378.60	2865.77	2936.42
-4 rows	43.00	43.00	n/a	n/a	n/a	n/a	n/a	n/a
	1681.45	1726.58	n/a	n/a	n/a	n/a	n/a	n/a

Table 5. Section dimensions (inches) and weights (pounds) - unit sizes 35-120

Unit size	35	40	50	57	66	80	100	120
Humidifier	14.00	14.00	14.00	14.00	15.00	15.00	15.00	15.00
-Direct steam	544.40	599.28	781.71	897.00	1123.05	1215.33	1362.86	1551.07
	19.00	19.00	19.00	19.00	19.00	19.00	19.00	19.00
-Atmospheric	581.42	664.92	723.70	802.82	977.24	1078.41	1264.58	1491.95
Silencer	38.00	38.00	38.00	38.00	38.00	38.00	38.00	38.00
-3 ft	918.37	973.72	1225.82	1331.88	1572.80	1741.00	2195.72	2554.94
	62.00	62.00	62.00	62.00	62.00	62.00	62.00	62.00
-5 ft	1334.66	1439.39	1795.06	1944.98	2312.54	2555.39	3230.00	3786.24
2-Deck or 3-Deck Multizone	78.00	78.00	78.00	n/a	n/a	n/a	n/a	n/a
- Horizontal discharge	1638.97	1760.51	2002.92	n/a	n/a	n/a	n/a	n/a
	92.00	92.00	96.00	n/a	n/a	n/a	n/a	n/a
- Vertical discharge	1881.25	2021.32	2466.01	n/a	n/a	n/a	n/a	n/a
	14.00	14.00	14.00	14.00	15.00	15.00	15.00	15.00
UV light	325.48	352.71	394.34	419.43	574.52	604.11	667.60	758.72
	94.00	91.00	100.00	100.00	101.00	101.00	102.00	102.00
Gas heat (highest MBH)	2469.40	2560.00	3575.20	3285.90	3700.50	3190.80	4470.00	4426.60
	10.00	10.00	10.00	10.00	10.00	10.00	10.00	10.00
Horizontal end cap	246.10	267.20	301.30	315.20	429.90	452.10	502.40	565.70
	75.00	83.00	72.00	75.50	83.00	86.00	93.00	93.00
Diagonal economizer for outdoor unit	973.26	1100.52	1168.76	1266.21	1722.26	1919.94	2289.68	2494.18
	22.40	22.40	22.40	22.40	22.40	22.40	22.40	22.40
Exhaust damper section for outdoor unit	351.40	379.60	425.10	443.70	587.70	616.90	681.10	760.20
Hoods								
- Side inlet hood (add to width) for diagonal economizer	27.75	27.75	29.50	33.00	42.63	45.13	47.00	47.00
	175.86	195.13	229.85	269.82	316.87	343.85	490.93	566.15
- Side inlet hood (add to width) for mixing box	34.00	35.00	38.75	43.38	48.63	57.13	60.50	63.00
	122.04	128.02	160.97	174.27	189.35	257.94	297.76	330.05
- Back inlet hood (add to length) for mixing box	27.75	27.75	29.50	33.00	42.63	45.13	47.00	47.00
	175.86	195.13	229.85	269.82	316.87	343.85	490.93	566.15
- Exhaust hood (add to length or width)	34.00	35.00	38.75	43.38	48.63	57.13	60.50	63.00
	72.80	76.89	92.81	113.92	128.56	174.08	206.04	221.35
Pipe cabinet weight								
15 inches long, 36 inches deep	175.00	175.00	191.00	209.00	215.00	243.00	265.00	265.00
24 inches long, 36 inches deep	199.00	199.00	216.00	236.00	243.00	273.00	298.00	298.00
48 inches long, 36 inches deep	263.00	263.00	284.00	309.00	317.00	354.00	385.00	385.00
96 inches long, 36 inches deep	392.00	392.00	421.00	454.00	466.00	517.00	558.00	558.00

Fans/Motors

Starter/VFD Weights

Fan weights do not include starter/VFD weights. The table below gives approximate starter/VFD weights.

Table 6. Approximate starter and VFD weights per horsepower (lbs.)

Horsepower	1	1.5	2	3	5	7.5	10	15	20	25	30	40	50	60	75	100	125
Starter[1]	65	65	65	65	65	65	65	65	65	97	97	97	97	97	97	97	97
VFD[2]	123	123	132	124	125	136	151	162	177	197	241	325	332	243	258	294	314

Note: [1]These weights represent the largest available starter. [2]VFD weights include transformer, distribution block, and enclosure.

Motor Weights

Fan weights provided in this manual include the heaviest ODP (open drip-proof) motor.

Table 7. Approximate motor weights (pounds)

Motor Type	Motor RPM	Horsepower 3/4	1	1-1/2	2	3	5	7-1/2	10	15	20	25	30	40	50	60	75	100	125
Energy efficient ODP (EEOP)	1800	24	29																
NEMA Premium ODP (HEOP)	1200/ 6 pole		39	77	91	147	126	249	300	375	443	594	667						
NEMA Premium TEFC (HETC)			56	96	109	148	185	310	341	423	481	614	655						
NEMA Premium ODP (HEOP)	1800/ 4 pole		36	42	47	76	82	118	148	234	263	330	379	488	521	698	808	1114	1238
NEMA Premium TEFC (HETC)			47	54	56	91	108	159	185	285	315	452	481	578	670	808	889	1239	1466
NEMA Premium ODP (HEOP)	3600/ 2 pole		36	36	37	89	104	173	203	267	243	261	407						
NEMA Premium TEFC (HETC)			36	53	62	85	103	154	176	287	322	448	496						

Installation - Mechanical

Lifting and Rigging

Remove Shipping Tie-Downs

Figure 4. Isolator tie-down removal for unit sizes 35-120

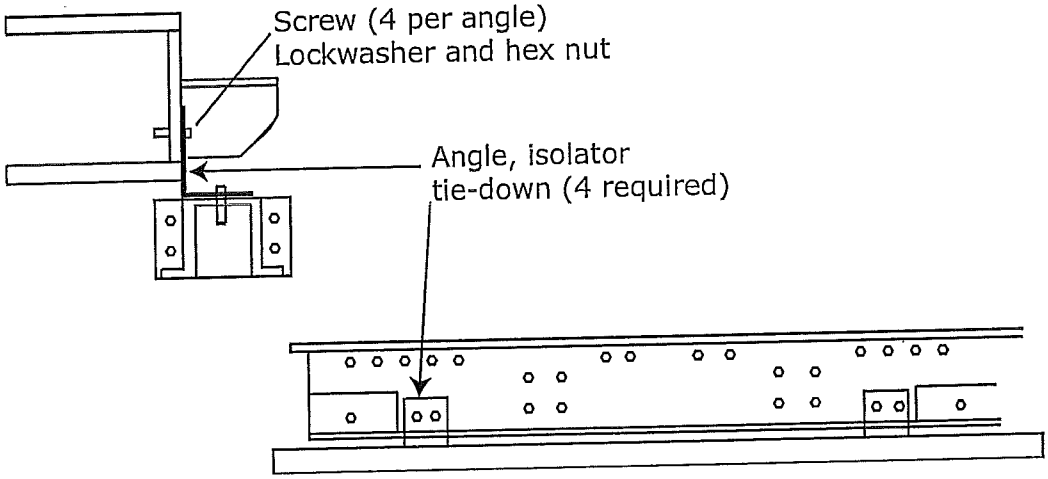

Prior to unit placement, remove the shipping tie-downs per the following instructions:

- Shipping tie-downs are located at each corner of the isolation base. See Figure 51, Figure 52, Figure 53 and Figure 54.
- Access for removal of shipping tie-downs for unit sizes 3-30 is available through the fan section access door or opposite drive-side plug panel. See Figure 5.
- Remove the bolt. This will release the isolator and make it possible to remove the pipe or spacer.
- Replace plug panel if applicable.

Note: *For outdoor air handlers, after isolator tie-down is removed, remove the paper backing from the butyl tape around plug panel perimeter prior to replacing plug panel.*

Figure 5. Plug panel plate

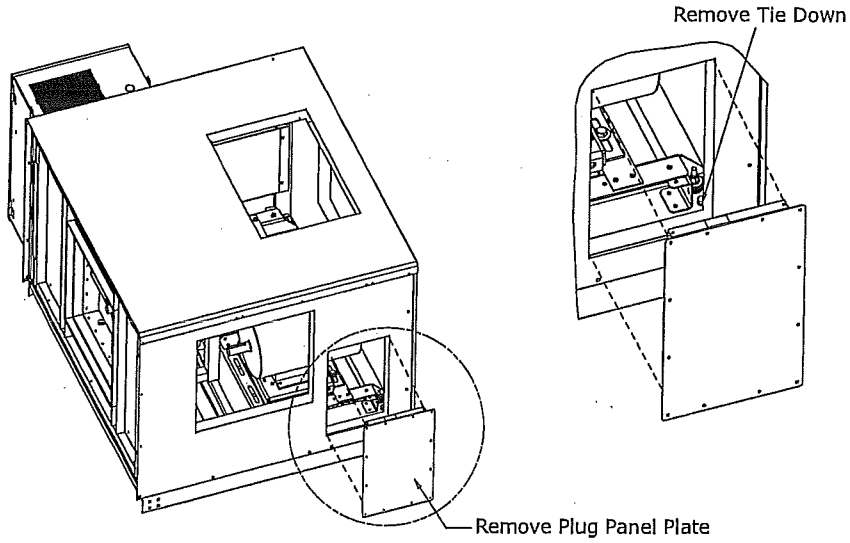

General Lifting Considerations

⚠ WARNING
Heavy Objects!

Always place, assemble, and suspend sections/subassemblies one at a time. Do not lift units in windy conditions. Do not raise units overhead with personnel below unit. Failure to follow these instructions could result in death, serious injury, or equipment damage.

⚠ WARNING
Improper Unit Lift!

Test lift unit approximately 24 inches to verify proper center of gravity lift point. To avoid dropping of unit, reposition lifting point if unit is not level. Failure to properly lift unit could result in death or serious injury or possible equipment or property-only damage.

NOTICE:
Equipment Damage!

Keep skid in place until unit is ready to set. Do not move unit or subassembly without the skid in place as shipped from the factory. Premature skid removal could result in equipment damage.

Before preparing the unit for lifting, estimate the approximate center of gravity for lifting safety. Because of placement of internal components, the unit weight may be unevenly distributed, with more weight in the coil and fan areas. Approximate unit weights are provided in "Unit Dimensions and Weights" on page 16. Refer to the unit submittals for actual section weights. Test the unit for proper balance before lifting.

For outdoor air handlers, preparation of the roof curb or pier mount and roof openings must be completed before lifting to the roof. See CLCH-SVN04A-EN Roof Curbs for Performance Climate Changer Air Handlers installation instructions for details.

⚠ WARNING

Heavy Objects!

Do not use cables (chains or slings) except as shown. Each of the cables (chains or slings) used to lift the unit must be capable of supporting the entire weight of the unit. Lifting cables (chains or slings) may not be of the same length. Adjust as necessary for even unit lift. Other lifting arrangements may cause equipment or property-only damage. Failure to properly lift unit could result in death or serious injury.

Always rig subassemblies or sections as they ship from the factory. Never bolt sections together before rigging.

- Make the loop of the sling parallel to the direction of airflow, if possible.
- When hoisting the unit into position, use the proper rigging method, such as straps, slings, spreader bars, or lifting lugs for protection and safety. **Use all lifting lugs provided.**
- For unit sizes 3 to 120 with integral base frame, use field-provided spreader bars and slings to rig units and subassemblies as shown in Figure 6. The air handler is not designed to be lifted or rigged from the top of the unit.

Figure 6. Lifting detail for unit sizes 3 to 120

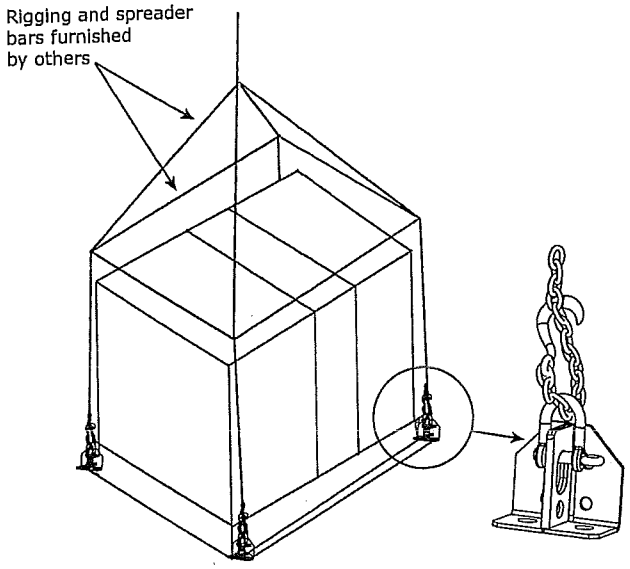

Figure 7. Lug holes

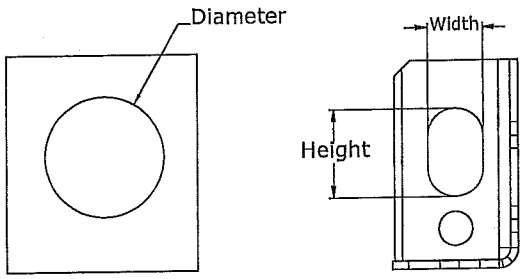

Table 8. Lug hole sizes

Section	Location	Unit Size	Width	Height
Unit Lug Hole Size	Indoor	3-30	0.88	1.38
	Indoor	35-57	1.38	1.25
	Indoor	66-120	1.25	2.75
	Outdoor	3-30	1.25	2.75
Pipe Cabinet	Outdoor	3-120	2.5-in. diameter	
Hood	Outdoor	3-120	1-in. diameter	

- \For outdoor air handlers, never stack the pipe cabinet or inlet hood on the unit as it is being lifted.
- Do not attach the intake/exhaust hood or pipe cabinet to the unit prior to lifting the unit. Doing so may damage the equipment. Attach the hoods to the unit only after all sections are in place.
- For outdoor air handlers, all shipping supports and crating on the face of the sections must be removed to permit proper fit-up and sealing of the surfaces. Dispose of properly.

Lifting Inlet and Exhaust Hoods and External Pipe Cabinet (Chase)

⚠ WARNING
Heavy Objects!

Always place, assemble, and suspend modules/subassemblies one at a time. Placing, assembling, and/or suspending more than one module/subassembly at a time could result in death, serious injury, or equipment damage.

See Figure 7 and Table 8 for lug hole sizes.

Figure 8. Inlet and exhaust hood lifting

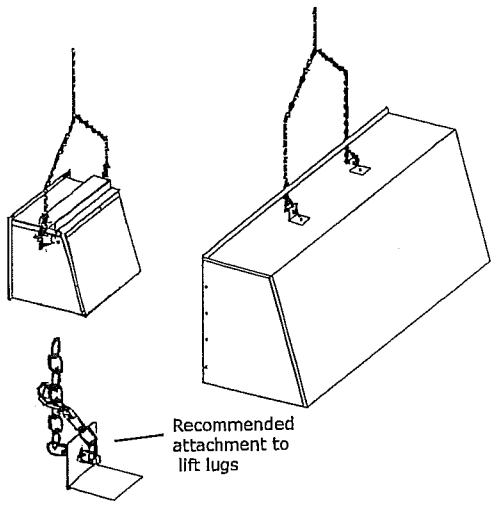

Figure 9. Pipe cabinet lifting

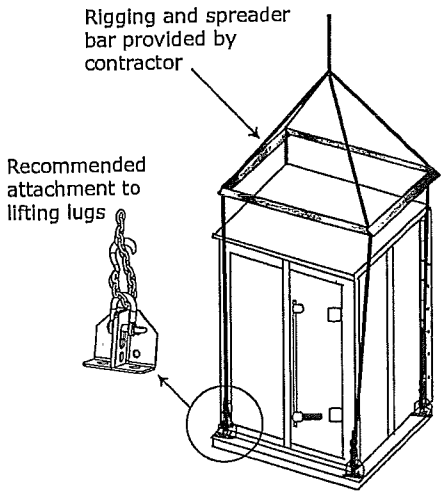

Forklifting Considerations for Indoor Units Size 3-30

NOTICE:

Equipment Damage!

Improper use of fork lifts could result in equipment damage. Fork lifting from any location other than that recommended by Trane and indicated on the unit labels could result in unit damage. Trane is not responsible for equipment damage resulting from improper forklifting practices.

Note: *Do not use a forklift on outdoor air handlers or indoor air handlers/subassemblies larger than size 30.*

For unit sizes 3-30, a forklift may be used to lift a single section or small subassembly, provided the forks extend under both ends of the base frame, or as indicated in Figure 10. The forks should not contact the bottom of the air handler. Units should only be lifted from the proper end identified by the lifting label on the unit.

A lifting crane or other means should be used for larger units where forks cannot extend under both base rails.

Figure 10. Fork lift points with base rail

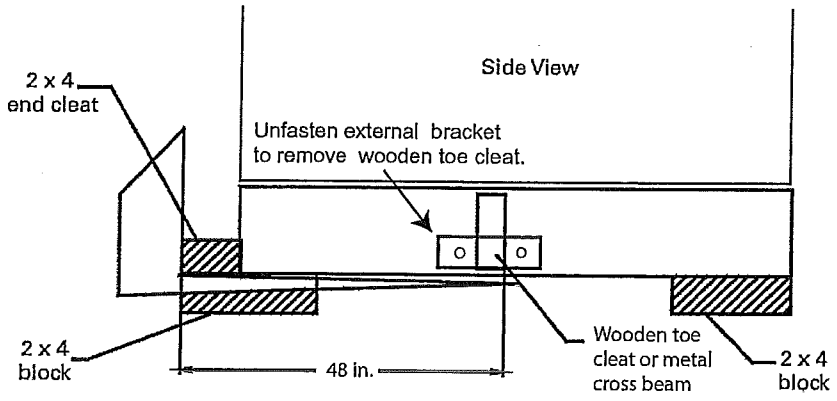

Unit Placement and Assembly

If the air handler ships in subassemblies or in individual sections, some assembly is required, including:

- Ceiling-suspended indoor unit assembly; see See "Ceiling Suspension for Indoor Air Handlers Sizes 3-57" on page 30.
- Section-to-section assembly; see "Section-to-Section Assembly" on page 32.

⚠ WARNING

Toxic Fumes!

Keep open flame away from unit exterior or interior. Do not weld or use cutting torch on the exterior or interior of the unit. The unit contains polyurethane insulation. Failure to keep open flame away form unit exterior or interior could result in the production of toxic gas that could result in death or serious injury.

NOTICE:
Temperature Limit!

The internal sections of this unit containing electrical components must not exceed 104° F operating temperature. Internal sections of the unit not containing electrical components must not exceed 200° F temperature. Failure to comply with temperature requirements could cause equipment damage.

Unit Placement

⚠ WARNING
Heavy Objects!

Always place, assemble, and suspend sections/subassemblies one at a time. Placing, assembling, and/or suspending more than one section/subassembly at a time could result in death, serious injury, or equipment damage.

NOTICE
Microbial Growth!

The roof curb or foundation must be level and the condensate drain at the proper height for proper coil drainage and condensate flow. Standing water and wet surfaces inside the equipment can become an amplification site for microbial growth (mold), which may cause odors and damage to the equipment and building materials.

If a unit arrives in sections, then each section must be individually hoisted, set on the housekeeping pad, roof curb, or pier mount and then assembled.

Refer to the unit submittals and unit tagging for correct placement of all sections. If there are any discrepancies between the submittals and the unit tagging, contact your local Trane representative before proceeding.

Following the order of the sections on the unit submittals and tagging, individually place each unassembled section or subassembly in the appropriate installation location.

Note: *Prior to placing fan section in the appropriate installation location, verify shipping tie-downs have been removed.*

For outdoor units, the pipe cabinet must also be mounted as an individual section. Refer to "Pipe Cabinet Installation" on page 40 for specific instructions.

When mounting the unit on a roof curb, make sure the gasketing between the roof curb and unit base provides an airtight seal.

When mounting the unit on a pier mount, locate one pier at each corner **as a minimum**, directly underneath any shipping split (ensure full support under each side) and then every four feet at equally spaced intervals around the perimeter of the unit. Both the unit and the pipe cabinet should be supported by their base around the entire perimeter. See Figure 11 and Figure 12.

For proper operation, the unit must be installed level (zero tolerance) in both horizontal axes. For vertical discharge units, allow space under the unit for supply air ductwork connections.

Figure 11. Piers located in each corner and spaced evenly every four feet

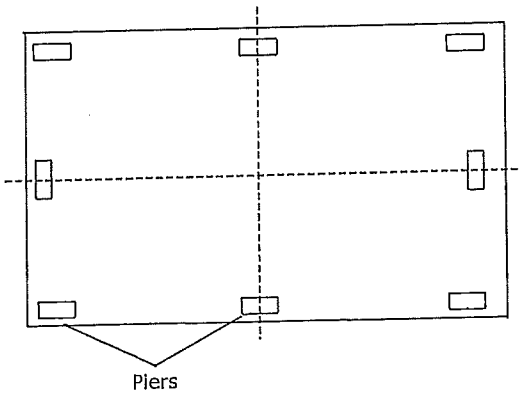

Figure 12. Side view with two shipping splits - locate one pier directly under each shipping split

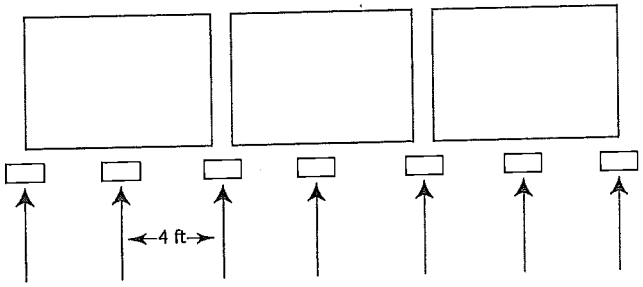

Note: *Piers beneath shipping splits must be structurally sound to support the weight of the unit.*

Unit Assembly

Note: *Air handlers often include optional factory-provided casing penetration entry points for field-provided wiring. Consider overall unit serviceability and accessibility before mounting, running wires (power), making cabinet penetrations, or mounting any components to the cabinet.*

See "Component Installation Requirements" on page 49 for special assembly/installation considerations.

Removing the Shipping Skid

Remove the wooden shipping blocks, wooden toe cleat if there is one, and end cleats prior to lowering unit into final position or installing the unit to the roof curb.

Ceiling Suspension for Indoor Air Handlers Sizes 3-57

Note: *Ceiling suspension is not recommended for units larger than size 57 unless using a field-provided mounting frame.*

Using a Field-Provided Mounting Frame

⚠ WARNING

Heavy Objects!

If a field-provided mounting frame is used for ceiling suspension, the installer/contractor must provide a ceiling-suspended mounting frame designed to support the length, width, and weight of the entire air-handling unit. Failure to use proper mounting frame, structural channels, and hangers could result in unit falling from its mounting location which could result in death or serious injury.

See "Unit Dimensions and Weights" on page 16 for approximate weights.

Note: *It is the building engineer's responsibility to size the structural channels and to provide the appropriate hangers.*

Structural channels in a field-provided frame can be mounted parallel to airflow or perpendicular to airflow:

- For parallel-to-airflow channels, size channels based on a four-point load distribution (see Figure 13.
- For perpendicular-to-airflow channels, size channels based on the load distribution of the individual sections and install the channels so that *both ends of every section are supported* (see Figure 14).

Figure 13. Typical suspension method using parallel channels

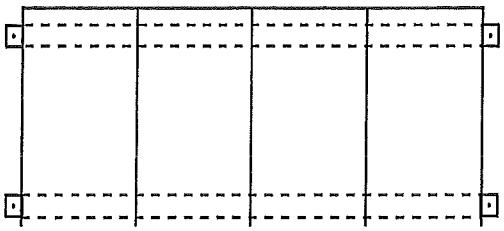

Figure 14. Typical ceiling suspension using perpendicular channels

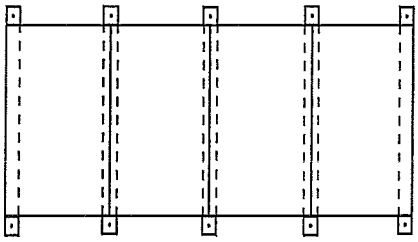

Using Integral Base Frame

If using the factory-provided integral base frame for ceiling suspension, individual sections and/or subassemblies will have base frame shipping splits and base frame lifting lugs. When using the base frame for ceiling suspension:

- Suspend the unit (on both sides of the unit) at each shipping split lug as well as the four corners of the unit (see Figure 15). See Figure 7 and Table 8 on page 27 for lug hole sizes.
- Bolt shipping splits together.

Note: *The hanger rods must extend through the bottom of the base lug. It is the building engineer's responsibility to provide the appropriate hangers.*

Figure 15. Ceiling suspension for unit sizes 3-57

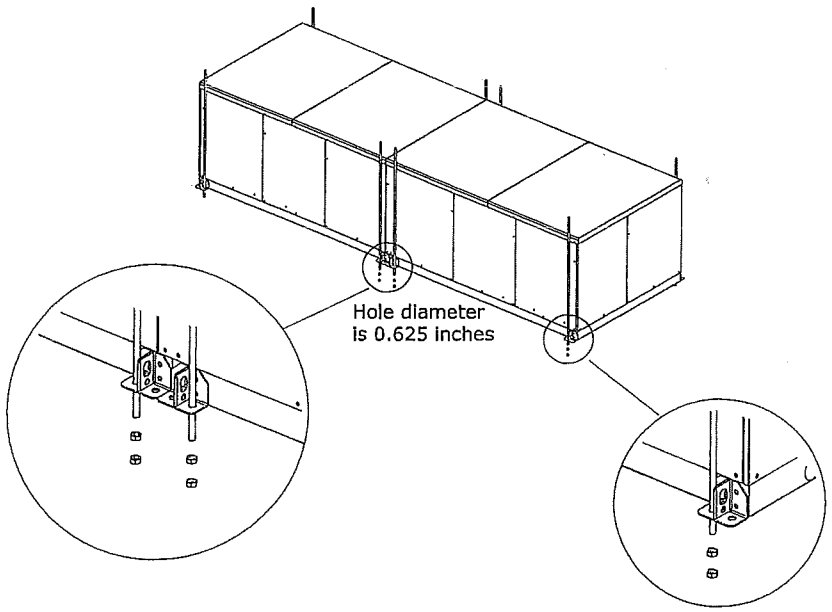

Section-to-Section Assembly

Air handlers ship with all necessary assembly hardware and gasket material. The hardware should be packaged in either a clear plastic envelope or cardboard box inside the fan section, access section, or mixing box.

The number of sections to be assembled often makes it necessary to use more than one section to ship the assembly material; therefore, check all sections thoroughly before contacting your Trane sales representative to report missing items.

Sections are joined with gasketing applied to one of the mating surfaces and hardware to bolt the sections together. The gasketing for section-to-section joints is a closed cell foam with adhesive backing.

To assemble the unit:

1. Locate the mounting hardware and gasket material.
2. All shipping supports and crating on the face of the sections must be removed and discarded to permit proper fit-up and sealing of the surfaces. Remove any shipping bolts located on the mounting surfaces of the sections (see Figure 16).
3. Apply the gasketing to one of the mating surfaces; see Figure 16, Figure 17, and Figure 18.

Figure 16. Section-to-section installation

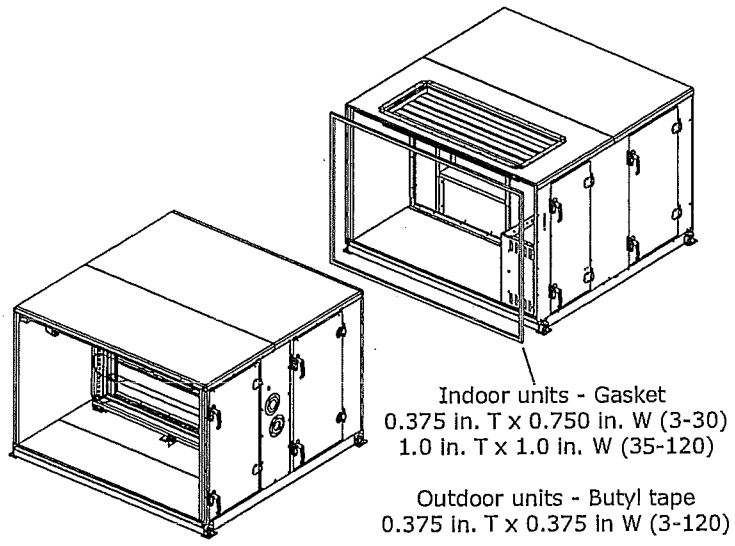

Figure 17. Coil-section-to-downstream-section bolt up with splash guard (shown for sizes 3-30)

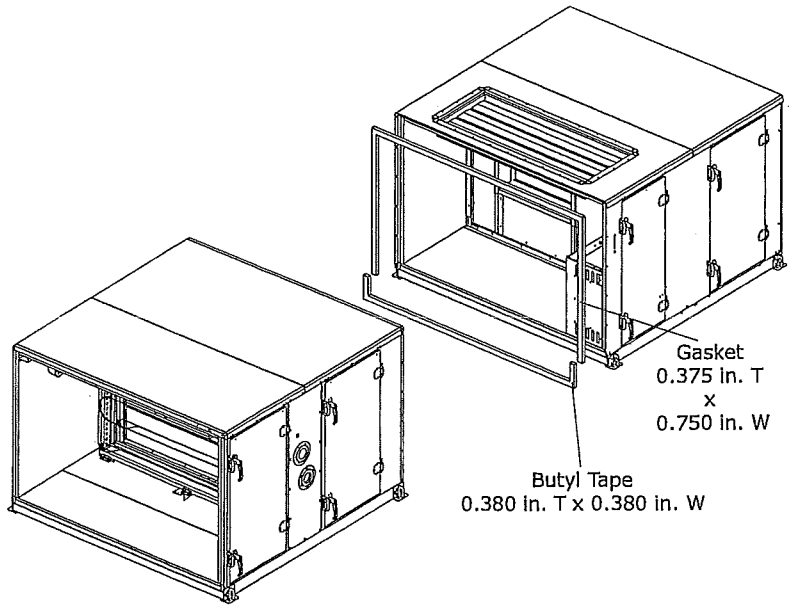

Figure 18. Stacked unit assembly (shown for sizes 3-50)

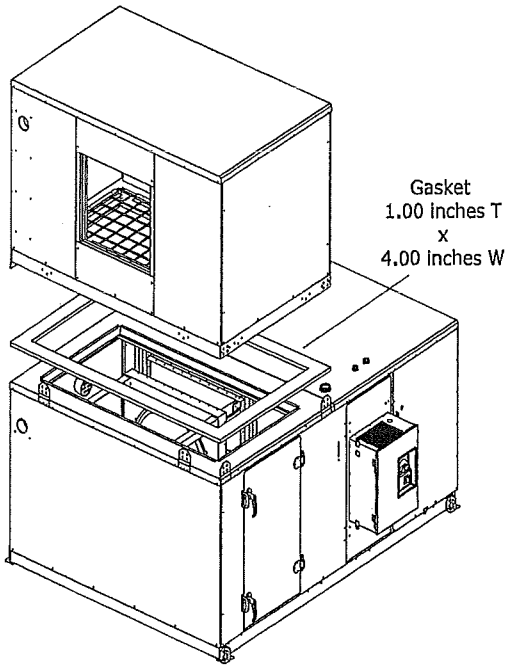

Figure 19. Horizontal section-to-section quick connects

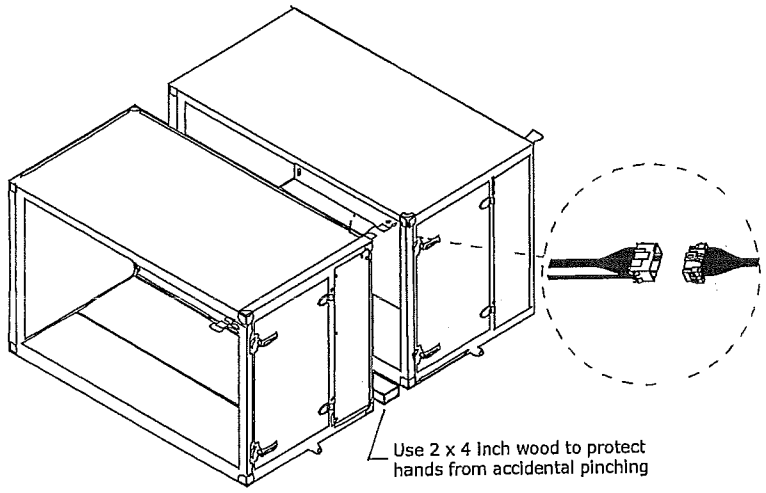

4. If the unit is equipped with factory-mounted controls, move adjacent subassembly within six inches and fasten quick connects where the sections bolt together (see Figure 19).

Note: *Reference the appropriate controller manual for more details on the installation of units with factory-mounted controls.*

5. Use a bar clamp to pull adjacent shipping section lifting lugs together.

Figure 20. Wedge block attachment

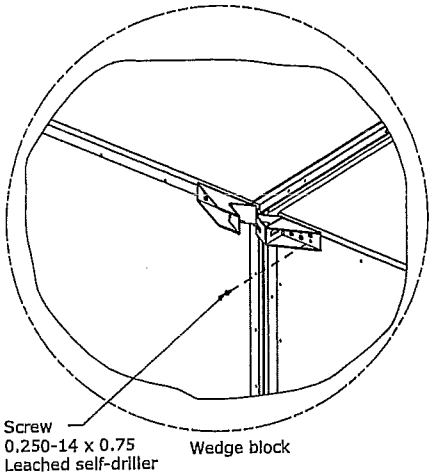

6. For indoor units sizes 66-120 and for outdoor units size 10-120, a wedge block is provided to aid in pulling and aligning the units together. Attach the wedge blocks to both sides of the units being pulled together, matching the correct wedge block with the correct hole pattern. See Figure 20.

7. Verify that the subassembly with the overhang profile on the roof is higher than the mating subassembly. If it is not, raise one end of the subassembly and bring the unit together. See Figure 21. In addition, an adjustment can also be made to the height of the roof of either subassembly by loosening the screws in the vertical channels or component structure and adjust the height of the roof (see Figure 22 and Figure 23).

8. Due to unlevel floor and platforms, the roof may be misaligned as shown in Figure 21. A common solution is to raise one end of the shipping section to clear the hemming before pulling the units together.

Figure 21. Roof alignment (indoor unit only)

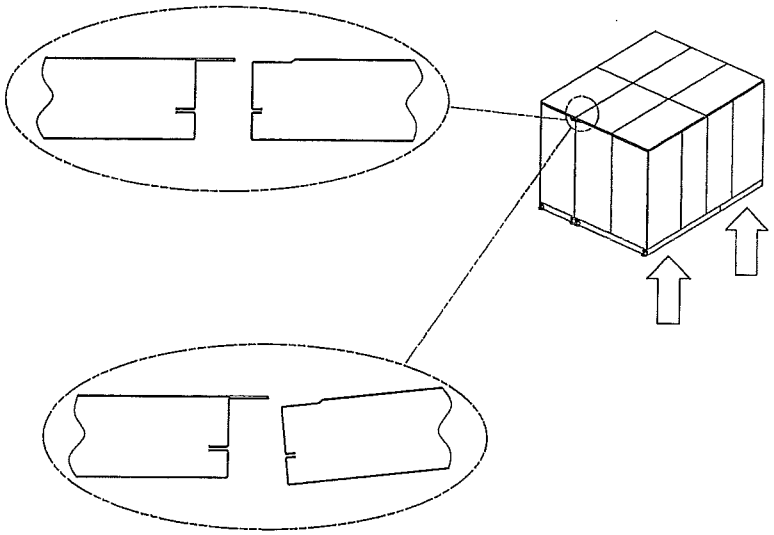

Figure 22. Adjust height of roof by adjusting vertical channels

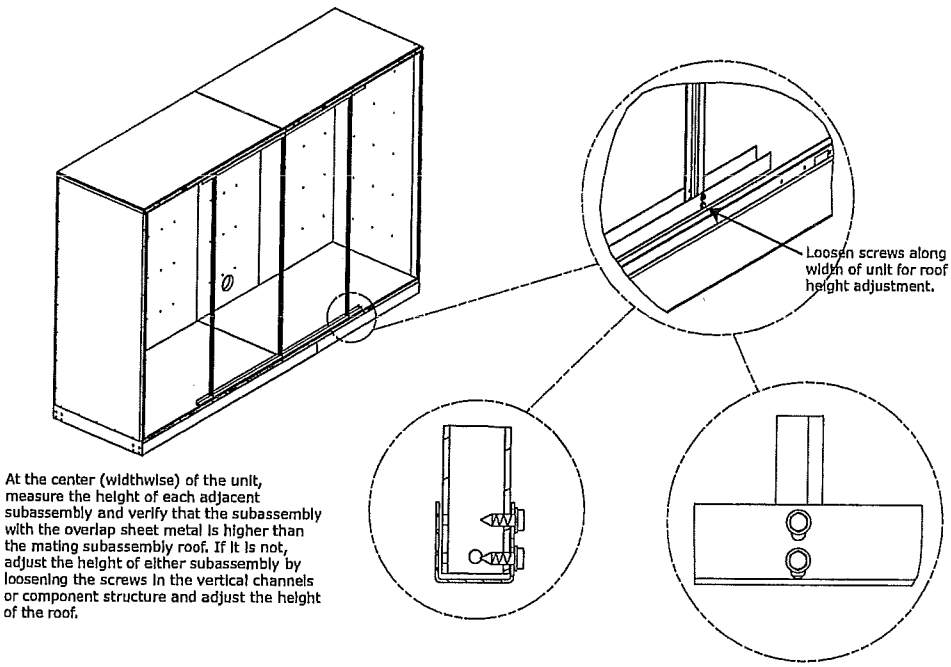

Figure 23. Adjust height of roof by loosening screws

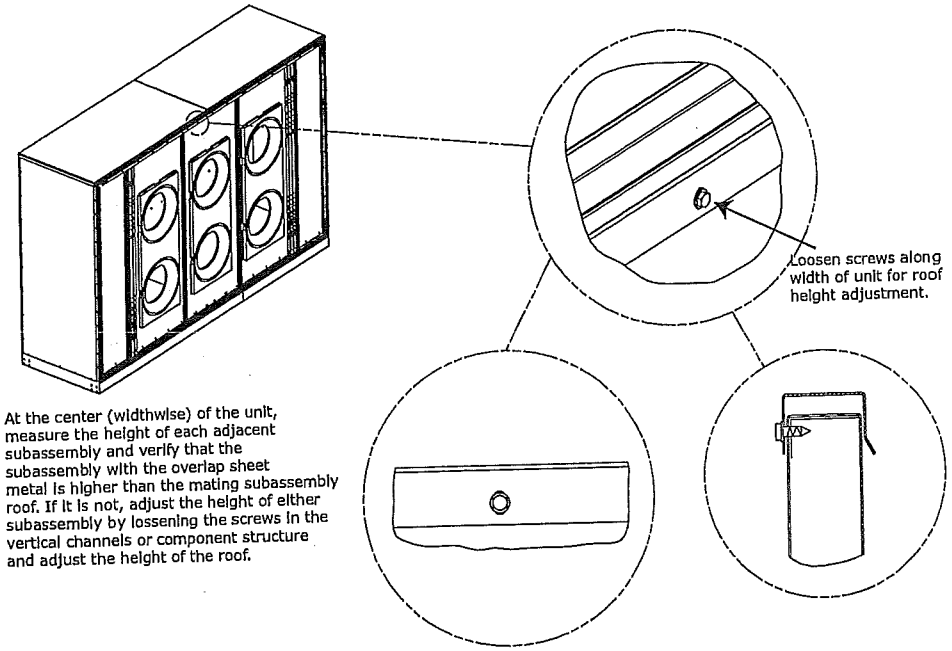

9. For unit sizes 3-30, bolt the unit base frames together using 5/16-inch bolts (see Figure 24).

Figure 24. Base frame split assembly for sizes 3-30

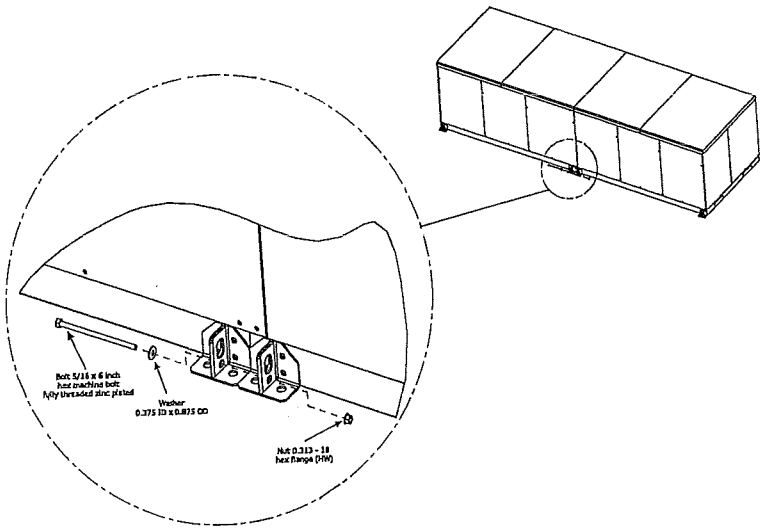

10. For unit sizes 35-120, bolt the unit base frames together using ½-threaded rod (see Figure 25).

11. For sizes 66-120 only, bolt through the wedge blocks using a ½-threaded rod (see Figure 25). Alternate between tightening on the lifting lug bolts and wedge block bolts until the shipping section comes together.

Figure 25. Wedge block attachment used for sizes 66-120 only

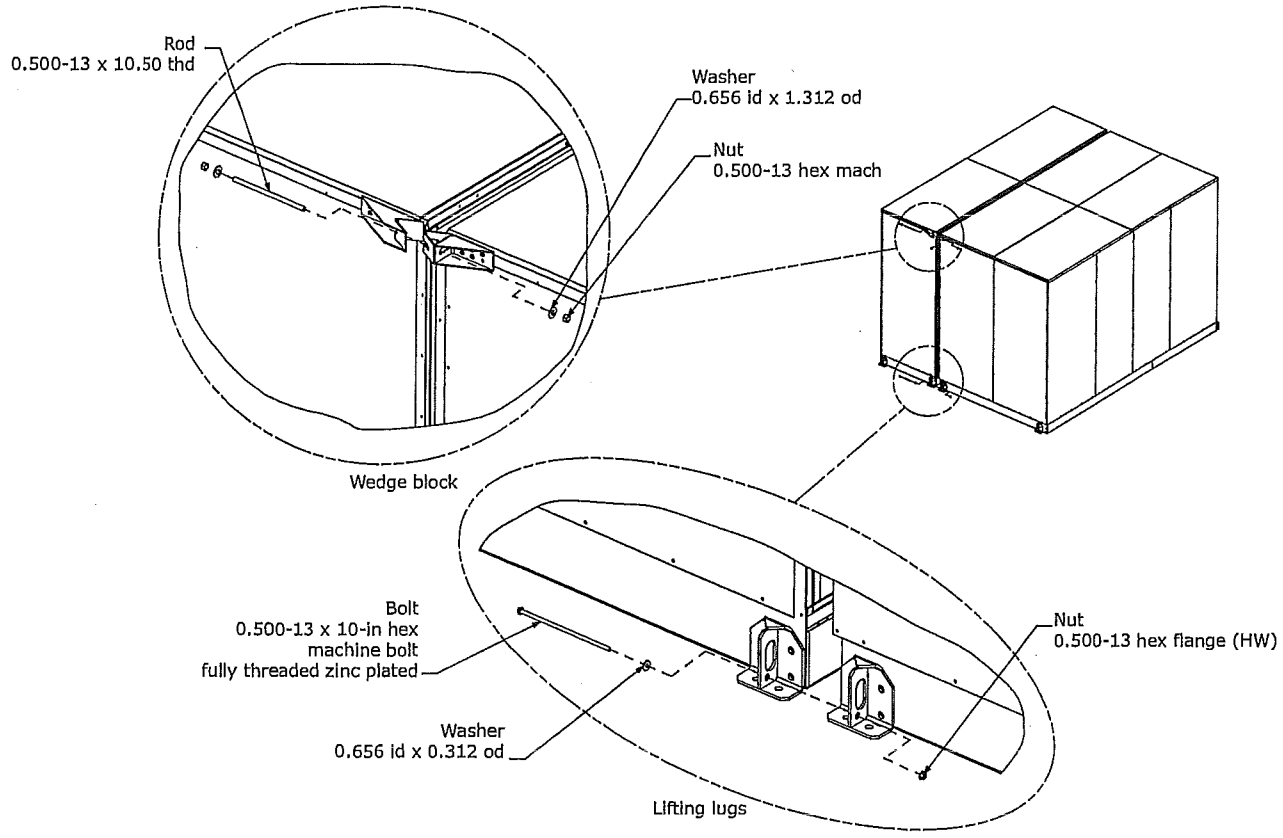

12. Use straps and come-alongs to compress the gasketing and pull the sections together along the height of the unit.

13. Install the section-to-section screws inserting the appropriate screws through the overlapping flanges using a powered impact gun and taking care not to strip the screws. Outdoor air handlers will ship with a seam cap that is to be installed over the section-to-section seams. Factory-supplied butyl tape must be applied over the seam prior to seam cap being applied. See Figure 26.

Figure 26. Section-to-section seam cap installation

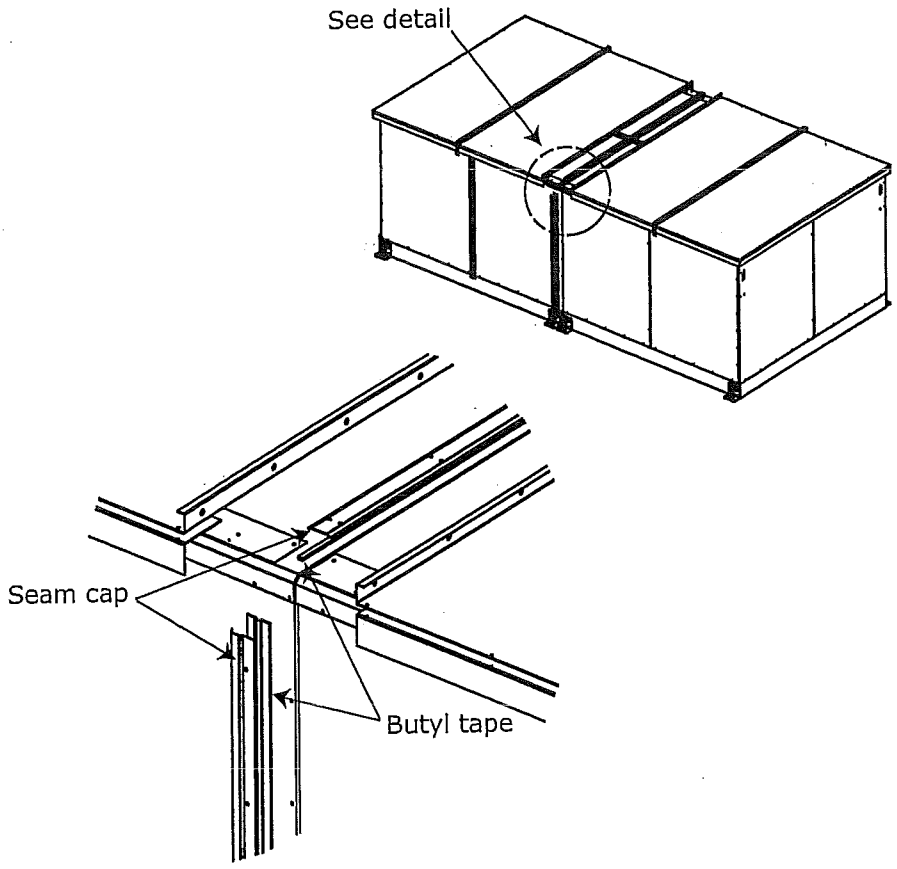

14. For stacked units, remove top level lifting lugs one at a time and replace with factory-provided stacking brackets at each shipping split corner and end of unit perpendicular to airflow after sections are set in final position (see Figure 27). Be sure to compress the gasketing to ensure a good air seal between the upper and lower sections.

Figure 27. Stacked unit hardware

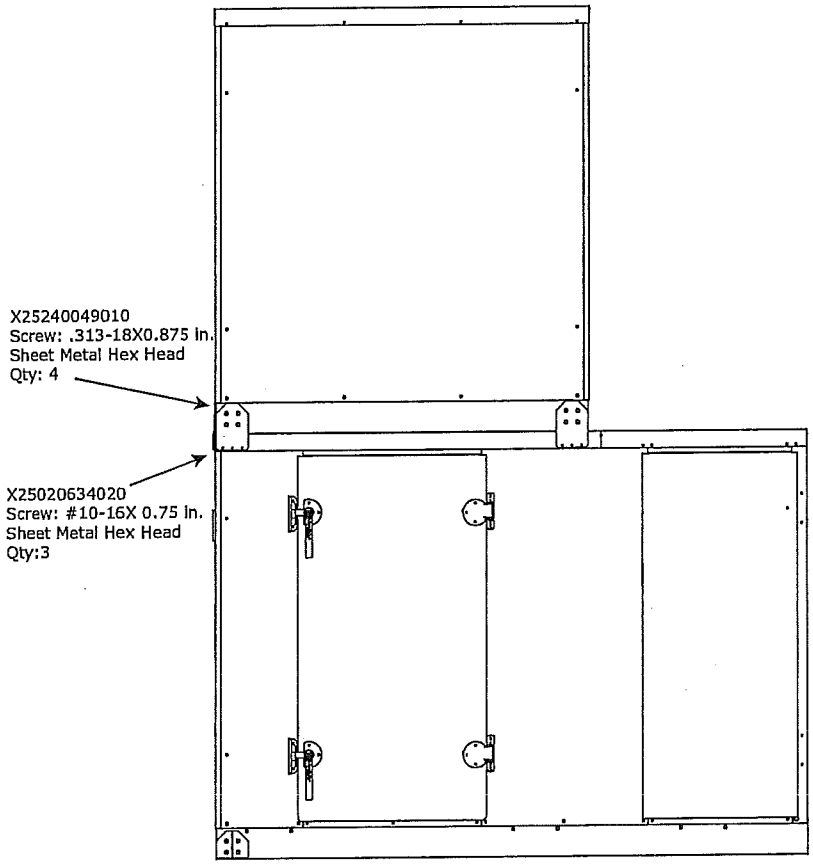

15. For outdoor air handlers, attach roof overhang angle with number 10 screws. Join outdoor roof panels together at the seams in the direction perpendicular to airflow and secure them in place with 5/16-inch x 3/4-inch bolts and 5/16 lock nuts. Install the roof joint strip to cover the seam between two outdoor roof panels in the perpendicular to airflow direction of. Use 3/8-inch butyl tape to cover the seam between two outdoor roof panels overhang at the side the unit. Bend joint strip over roof panel and use two number 10 sheet metal screws (one in each roof panel) to secure joint strip. Trim the roof joint strip to insure that it does not protrude more than 1/16-inch beyond outdoor roof overhang (see Figure 28).

Figure 28. Join outdoor roof panels at the seams

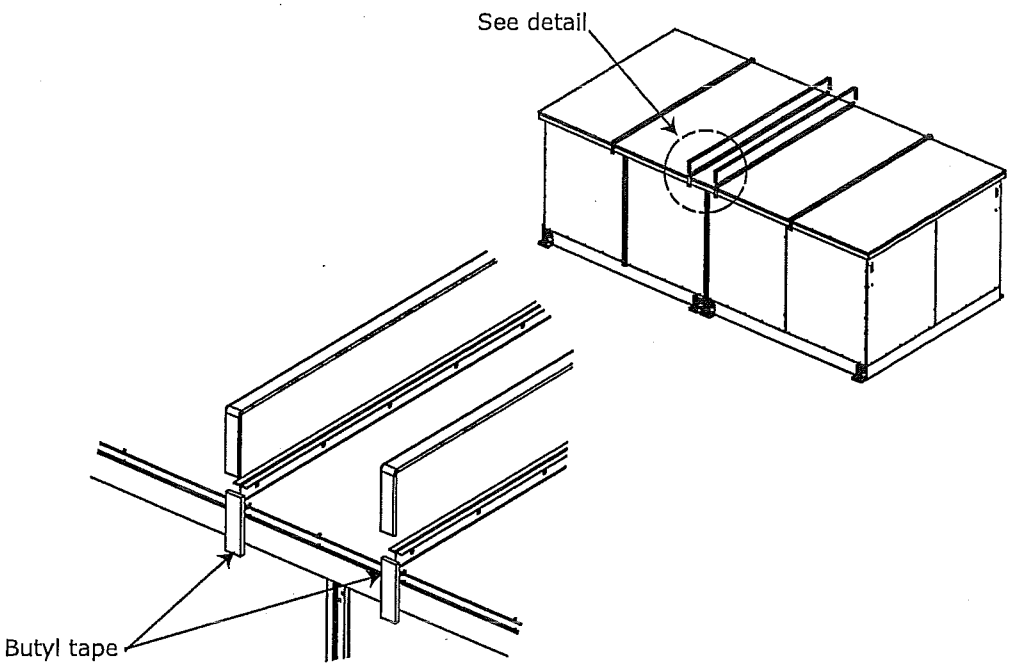

Pipe Cabinet Installation

1. After air handler is completely installed and checked for accuracy of level and square, pipe cabinet install can begin.
2. Remove pipe cabinet base cross member by removing the four bolts and nuts.
3. Check to ensure that the structure the pipe cabinet is to be installed on is square and level.

4. Install 3/8-inch x 3/8-inch white butyl tape to flanged side of pipe cabinet wall and remove paper backing from tape. See Figure 29.

Figure 29. Pipe cabinet installation

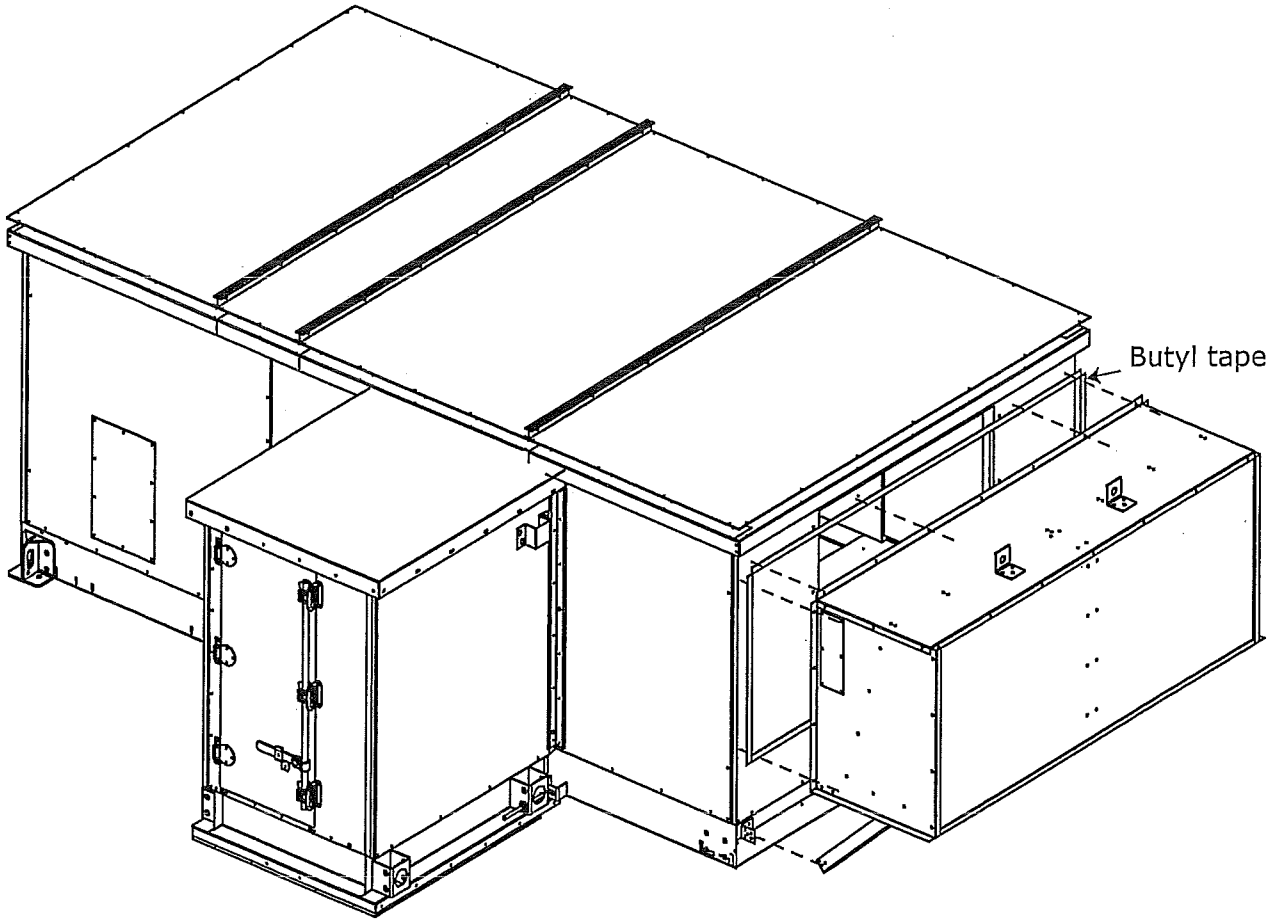

5. Lift cabinet into place on to pipe cabinet curb.
6. Slide pipe cabinet tight up against the sidewall of the air handler.
7. Check pipe cabinet side walls to ensure they are plumb.
8. Apply a bead of caulk along the corner between the pipe cabinet and air handler wall prior to installing connecting angle.

9. Install inside corner cap. See Figure 30 Detail A and B.
10. Install 3/8-inch x 3/8-inch white butyl tape to unit wall where pipe cabinet roof connects.
11. Lift pipe cabinet roof into place and attach to unit wall with screws. See Figure 30.

Figure 30. Pipe cabinet

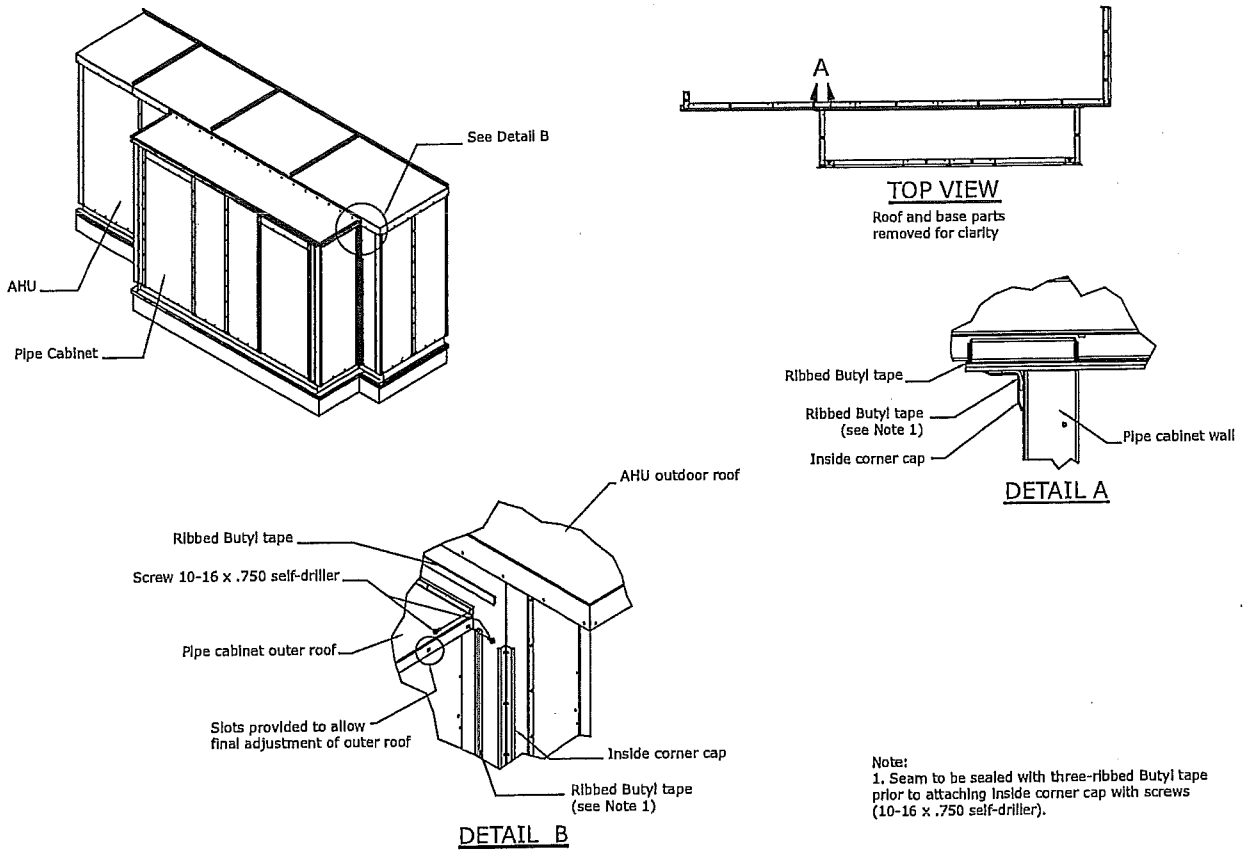

Outdoor Unit Weather Hood(s)

1. Per the unit drawing determine mounting location of the unit weather hoods.
2. Using the factory provided screws mount the weather hoods to the unit.
3. On larger units, weather hoods may be large enough to require angled down supports. In those cases, the angles are shipped attached to the hood but will need to be connected to the air handler by the installing contractor. See Figure 31.

Note: *It is required that the hoods be sealed to the unit using factory-provided butyl/caulk tape.*

Figure 31. Hood installation

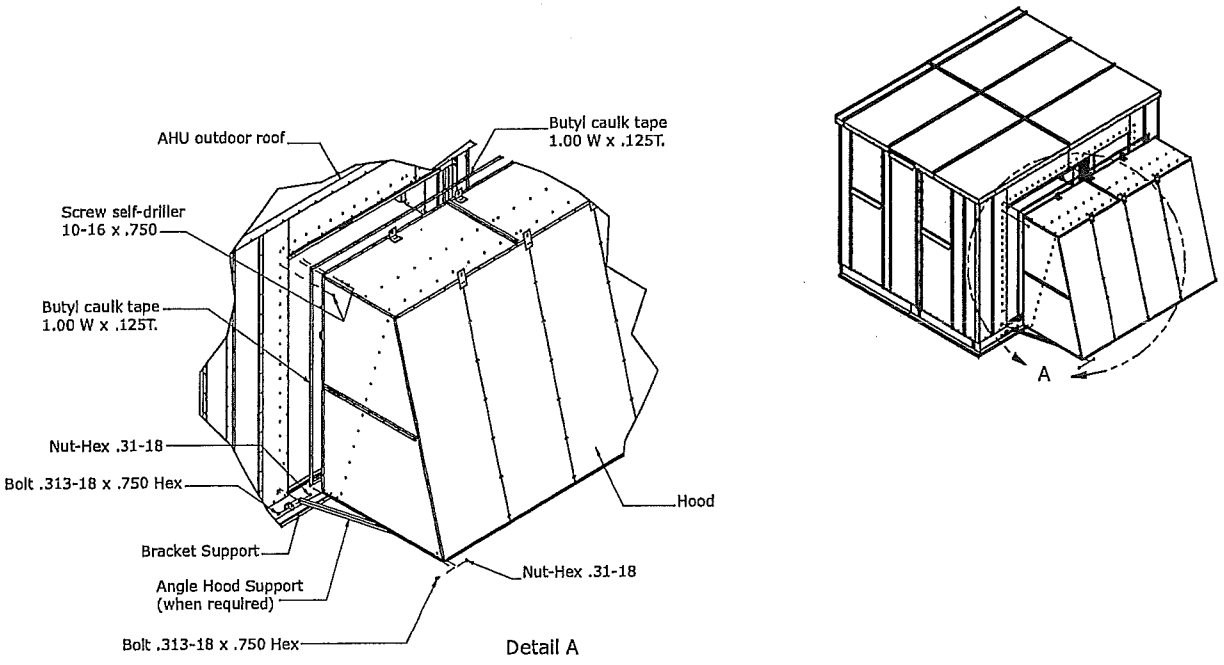

Indoor Dual-Path Split Dehumidification Unit (SDU)/Winterizer Assembly

⚠ WARNING

Heavy Objects!

Do NOT stack air handlers unless factory-designed and factory-approved. When stacking units, factory-designed unit support brackets must be used. Stacking units without factory-approval and without using factory-provided support brackets could result in the base unit collapsing under the weight of the top unit which could result in death, serious injury and equipment damage.

A dual-path, SDU/winterizer air handler consists of two units that are stacked together in a draw-thru arrangement that share one supply fan. The unit on the first level (primary unit) is designed to handle the return air and is larger than the unit on the second level (secondary unit), which is designed to handle outside air.

Factory-designed unit support brackets are provided with all factory-approved, dual-path SDUs or winterizer air handlers.

- A horizontal SDU/winterizer dual-path air handler incorporates a horizontal supply fan on the first level with a top opening in the primary unit that aligns with a bottom opening in the secondary unit.
- A vertical SDU/winterizer dual-path air handler incorporates a vertical supply fan on the second level with a back opening that aligns with a front opening in the secondary unit.

To assemble air handlers utilizing factory-approved and factory-provided dissimilar unit sizes for horizontal SDU or winterizer applications, join all similar size shipping sections per "Section-to-Section Assembly", Step 1 through Step 13, p. 32 through p. 39.

Horizontal SDU/Winterizer Indoor Air Handler Assembly

To assemble dissimilar unit sizes in a horizontal SDU/winterizer configuration:

1. Locate the mounting hardware and gasket material.

Note: *Black unit support brackets ship pre-installed on the primary (larger) unit section.*

2. Apply gasket in direction of airflow between the black unit support brackets to the roof of the primary unit. See Figure 32. The gasket needs to be placed such that it will be directly under the integral base frame of the secondary (smaller) unit to be stacked on top. The secondary unit will be centered along the width on the primary unit.

Figure 32. Apply gasket in direction of airflow

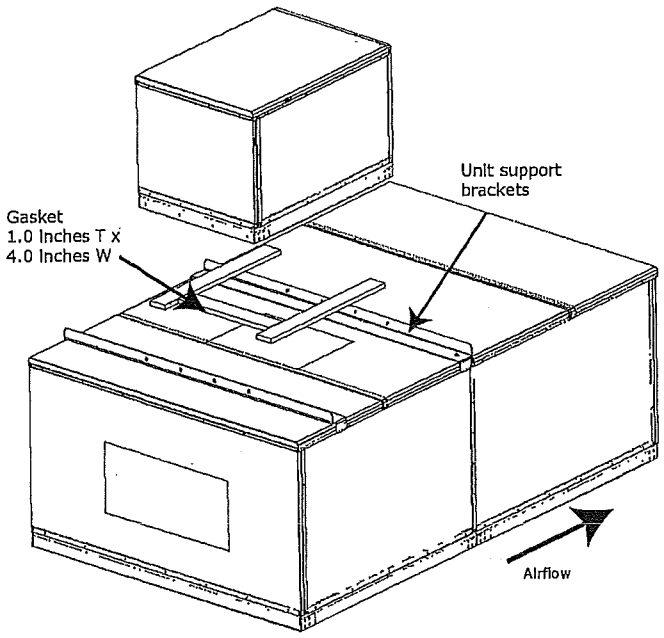

3. If there is an opening in the roof of the primary unit, apply gasket perpendicular to airflow on the roof next to the opening (air entering side only).

4. Lift the secondary unit, following instructions in "General Lifting Considerations" on page 25 (see Figure 6), and place on the black unit support brackets (see Figure 33). The secondary unit must be centered on the primary unit between the black unit support brackets.

Figure 33. Place secondary unit on black unit support brackets.

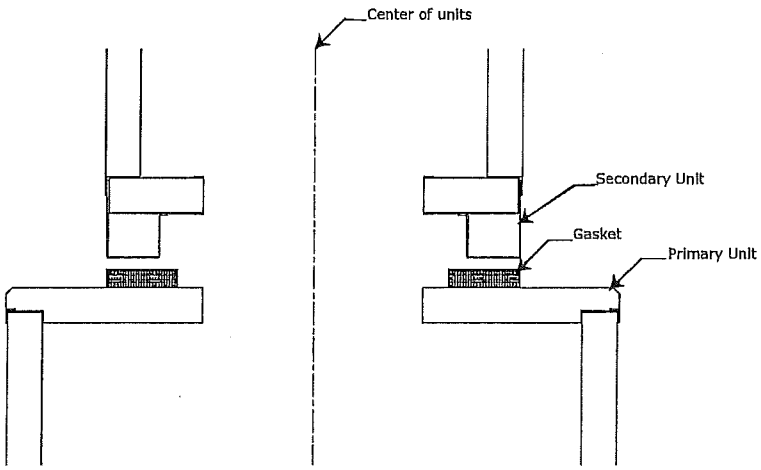

5. Install screws as shown in Figure 34 inserting the appropriate screws using a powered impact gun and taking care not to strip the screws.

Figure 34. Install screws using powered impact gun.

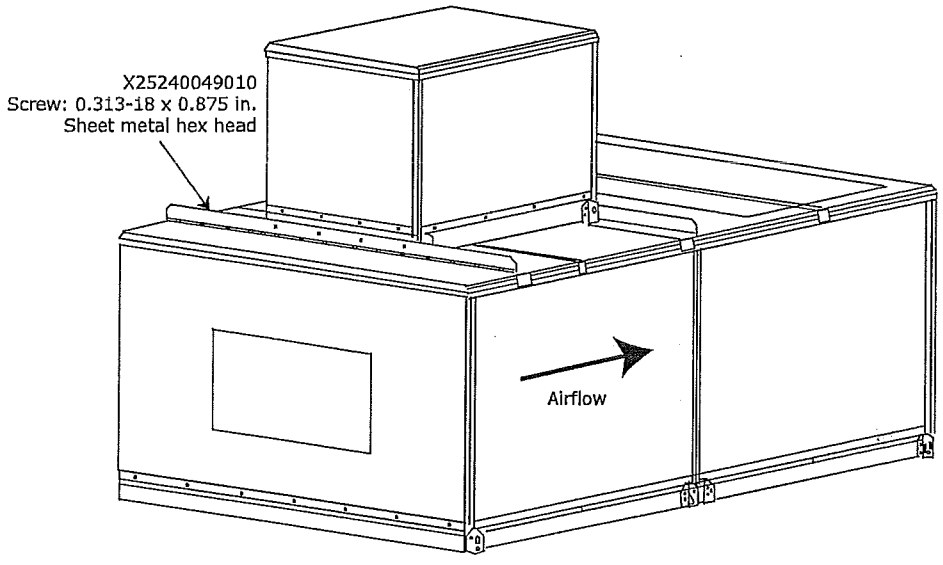

6. Remove the secondary unit lifting lugs one at a time and reinstall screws after sections are set in final position.

Vertical SDU/Winterizer Indoor Air Handler Assembly

To assemble dissimilar unit sizes in a vertical SDU/winterizer configuration:

1. Apply gasketing to the mating surface of the secondary unit (see Figure 35).

Figure 35. Apply gasketing to mating surface of secondary unit.

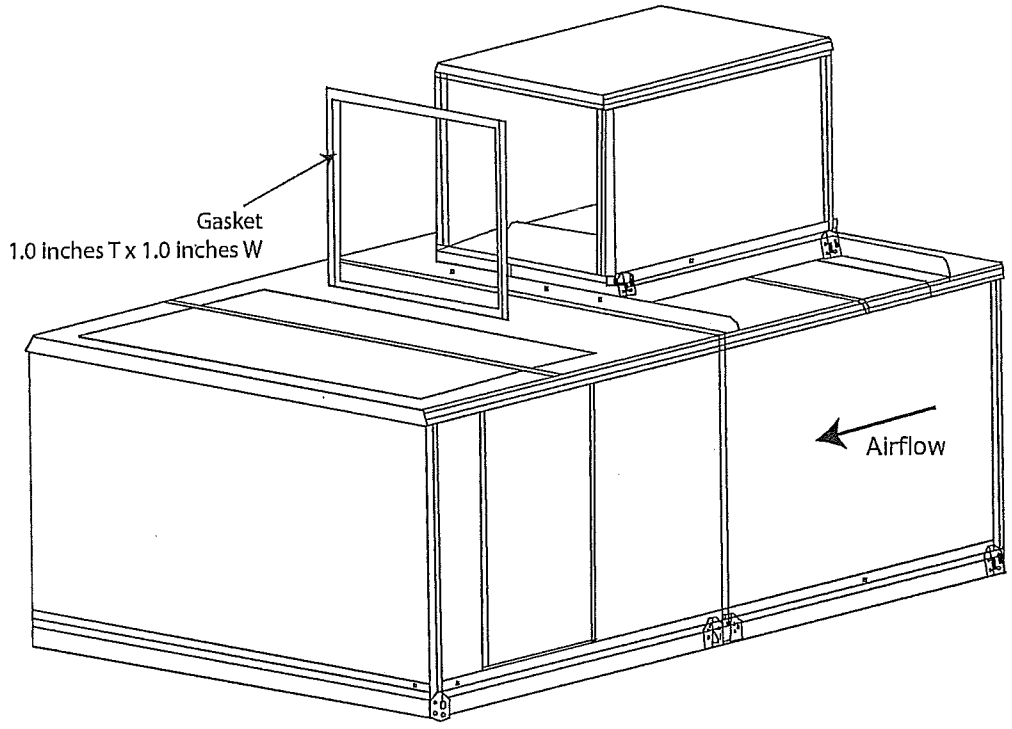

2. Apply gasketing to the mating surface of the primary unit at the bottom of the opening (see Figure 36.

Figure 36. Apply gasketing to the mating surface of the primary unit.

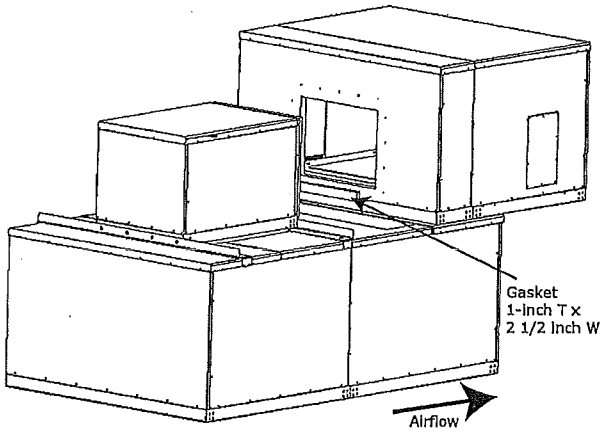

3. Lift the secondary unit, follow instructions in "General Lifting Considerations" on page 25 (see Figure 6), and place on the black unit support brackets (see Figure 33, p. 45. The secondary unit must be centered on the primary unit between the black unit support brackets.
4. Install trim angles as shown in Figure 37 inserting the 10-16 x 3/4-inch self-drilling screws using a powered impact gun and taking care not to strip the screws.

Figure 37. Install trim angles

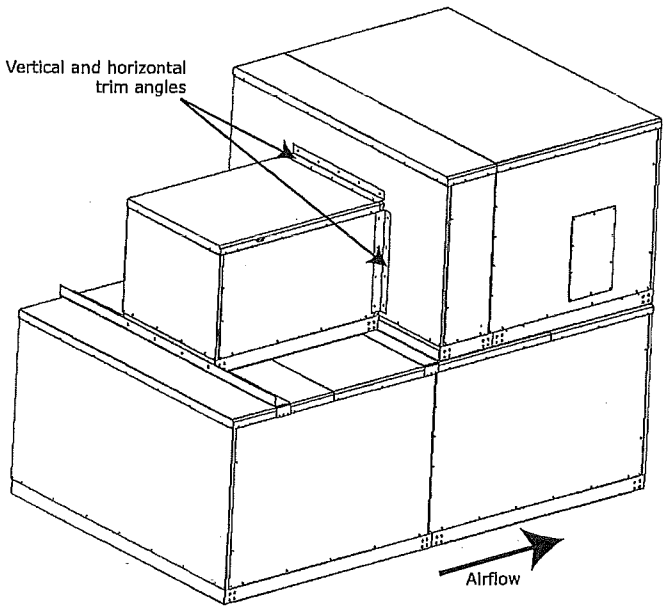

External Raceway Assembly

For air handling units with factory-installed power wiring extending from the first level to the second level, wiring must be connected and assembled in a raceway.

1. Remove protective foam cover from connectors.
2. Attach stacked raceway harness connectors, matching connector colors on the high voltage side and connector numbers on the low voltage side.
3. Verify conduit size.
4. Attach covers.
5. Secure conduit.

Figure 38. External raceway

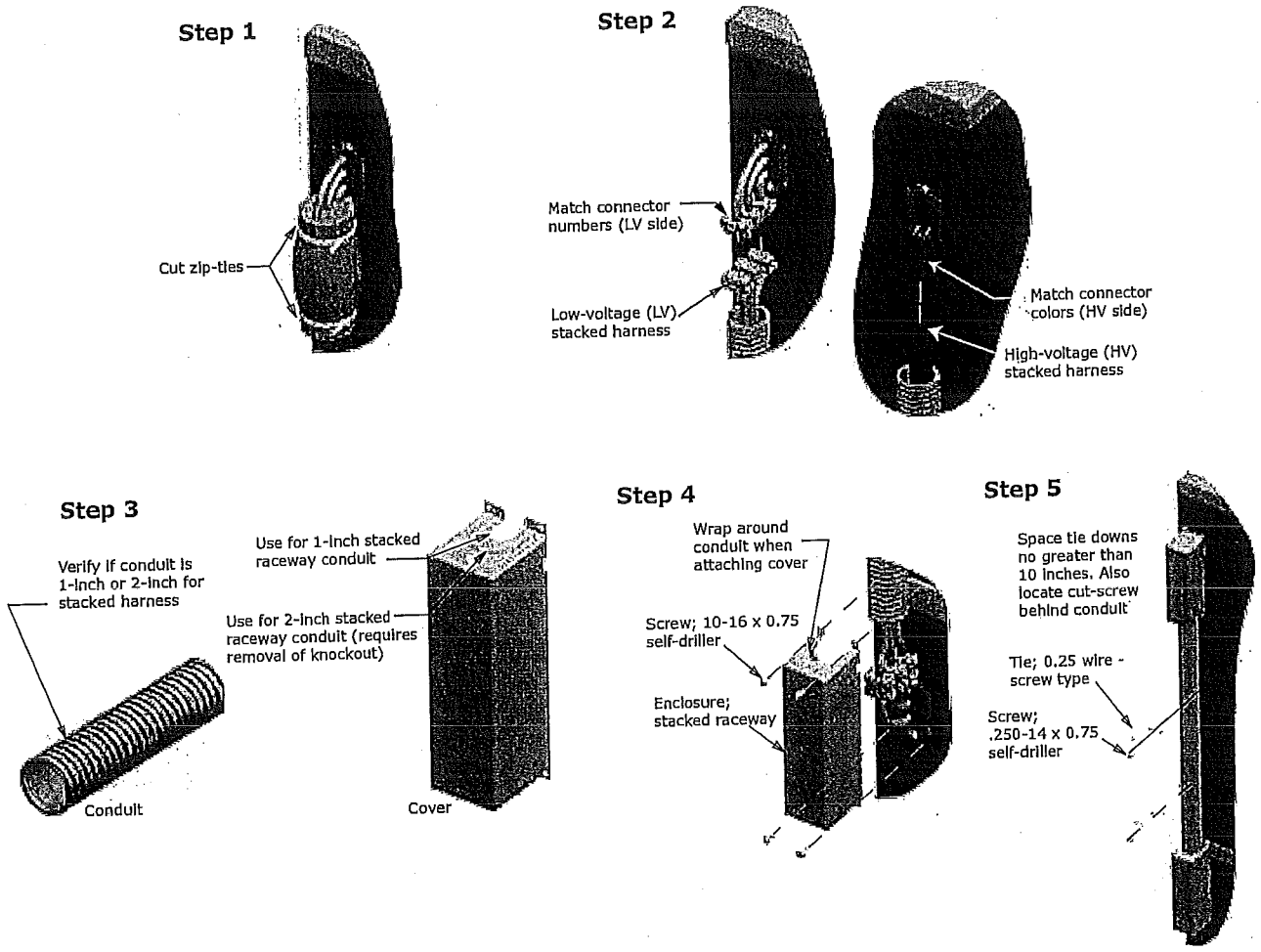

Component Installation Requirements

The components in the air handler may have installation requirements that could affect the unit's performance.

Diffuser Sections

Diffuser sections are usually placed between a fan and a downstream coil or filter. Because placement is critical to unit performance, verify the correct placement of the diffuser section before assembling the unit (see Figure 39).

Figure 39. Diffuser placement sizes 3 to 120

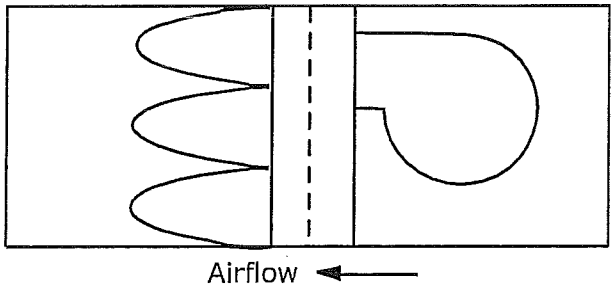

Filter Sections

Bag and cartridge filter sections can be used as a pre-filter section, a final filter section, or both. This use is determined by the filter's placement in relation to the fan.

- A final filter is placed after the fan.
- A pre-filter is placed before the fan.

Note: *Cartridge and bag filters provided by Trane are fitted with a 7/8-inch header that fits in the filter track. If using filters supplied by another manufacturer, filters should be purchased with a 7/8-inch header. In some cases it may be necessary to gasket other manufacturers' filters to ensure a good air seal.*

Filters should be installed when the unit is set. This will protect internal components, such as the heating and cooling coils.

Final Filter Section

A final filter section should not be bolted directly to the face of a fan section. One or more intermediate sections must be placed between the fan discharge and the filter section.

Pre-Filter Section

A pre-filter section has no special installation requirements unless placed directly upstream of a plenum fan. In these configurations, ensure a blank section is placed between the fan inlet and the filter section.

Trane recommends the use of disposable pre-filters with high-efficiency filters. Disposable pre-filters slide into the mounting tracks just ahead of the bag/cartridge filters.

Filter Installation

⚠ WARNING
Hazardous Voltage!

Disconnect all electric power, including remote disconnects before opening door. Follow proper lockout/tagout procedures to ensure the equipment cannot be inadvertently energized. Failure to disconnect power before servicing could result in death or serious injury.

Figure 40. Filter block-off placement

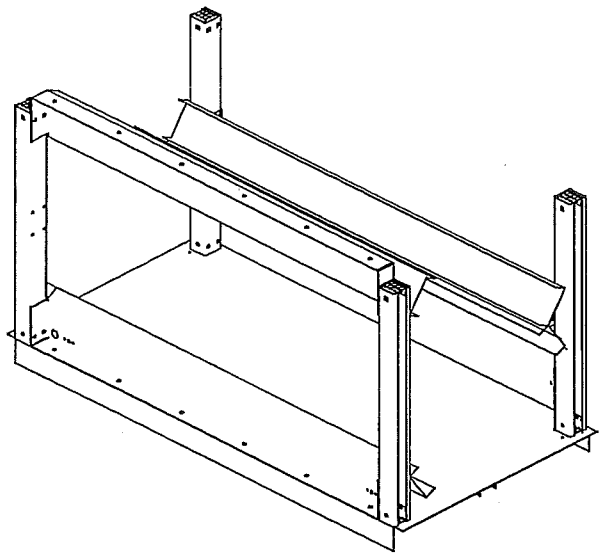

To install filters:

1. Disconnect the power to the unit.
2. Open the filter section access door.
3. Slide the filters into the tracks.

Note: *Bag filters must be installed with the pleats in the vertical plane.*

4. The block-off is permanently installed and will create a seal when the access door is closed.
5. Close the access door slowly to allow any gasketing to compress.

Filter Placement

Figure 41. 2-inch and 4-inch angled filter placement for unit sizes 3-50

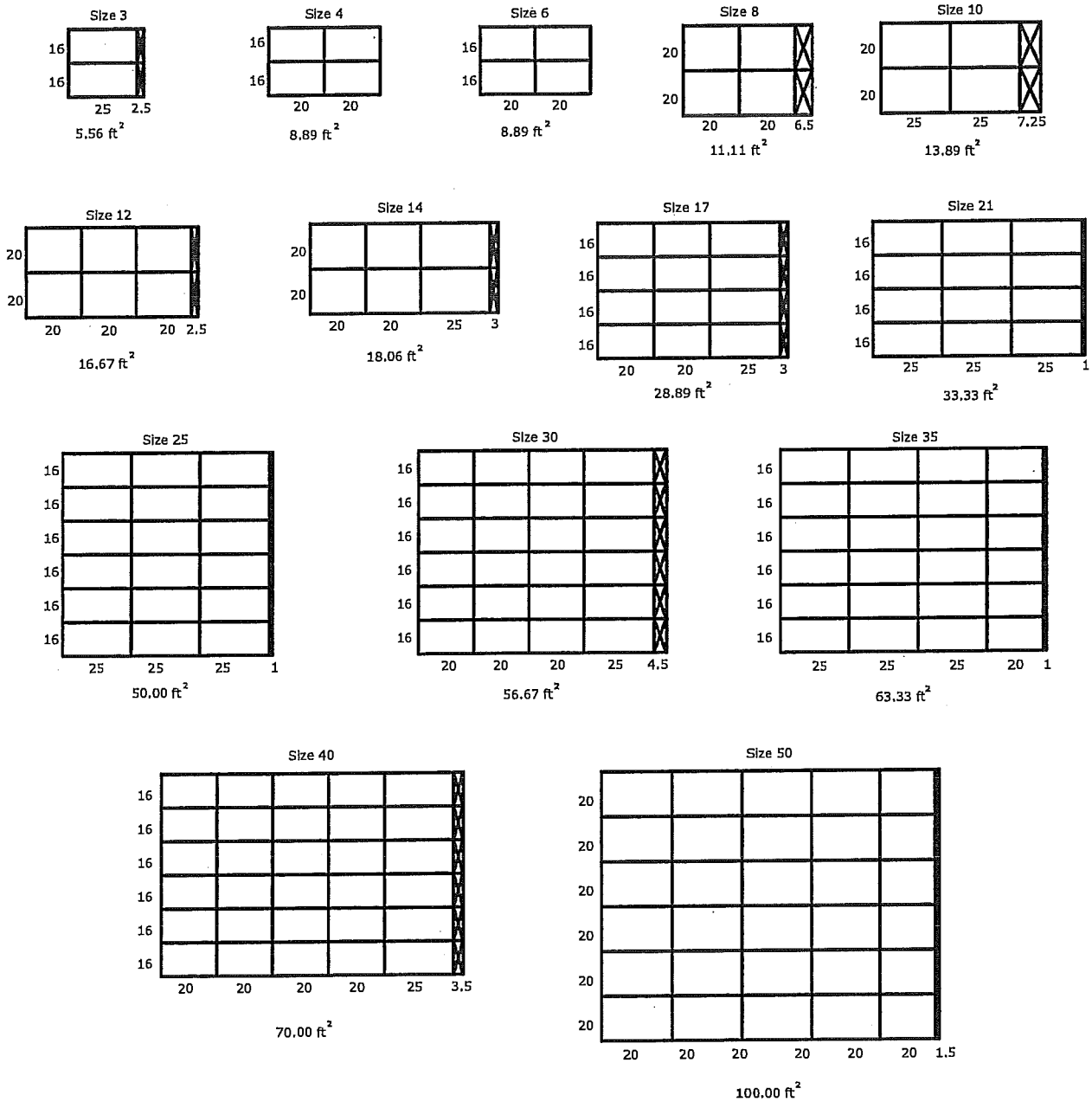

Figure 42. 2-inch and 4-inch angled filter placement for unit sizes 57-120

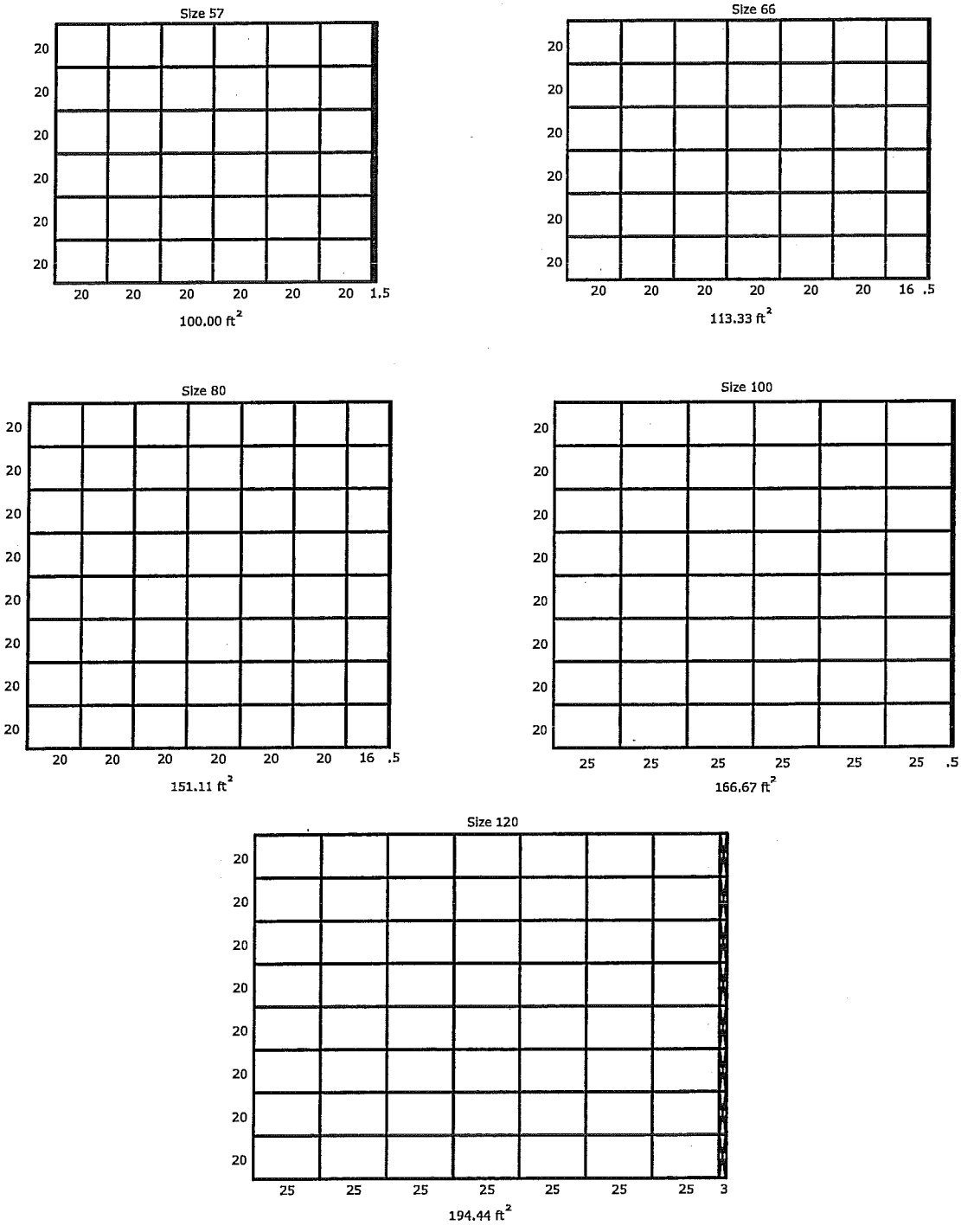

Figure 43. Bag and cartridge side-loading filter placement for unit sizes 3-50

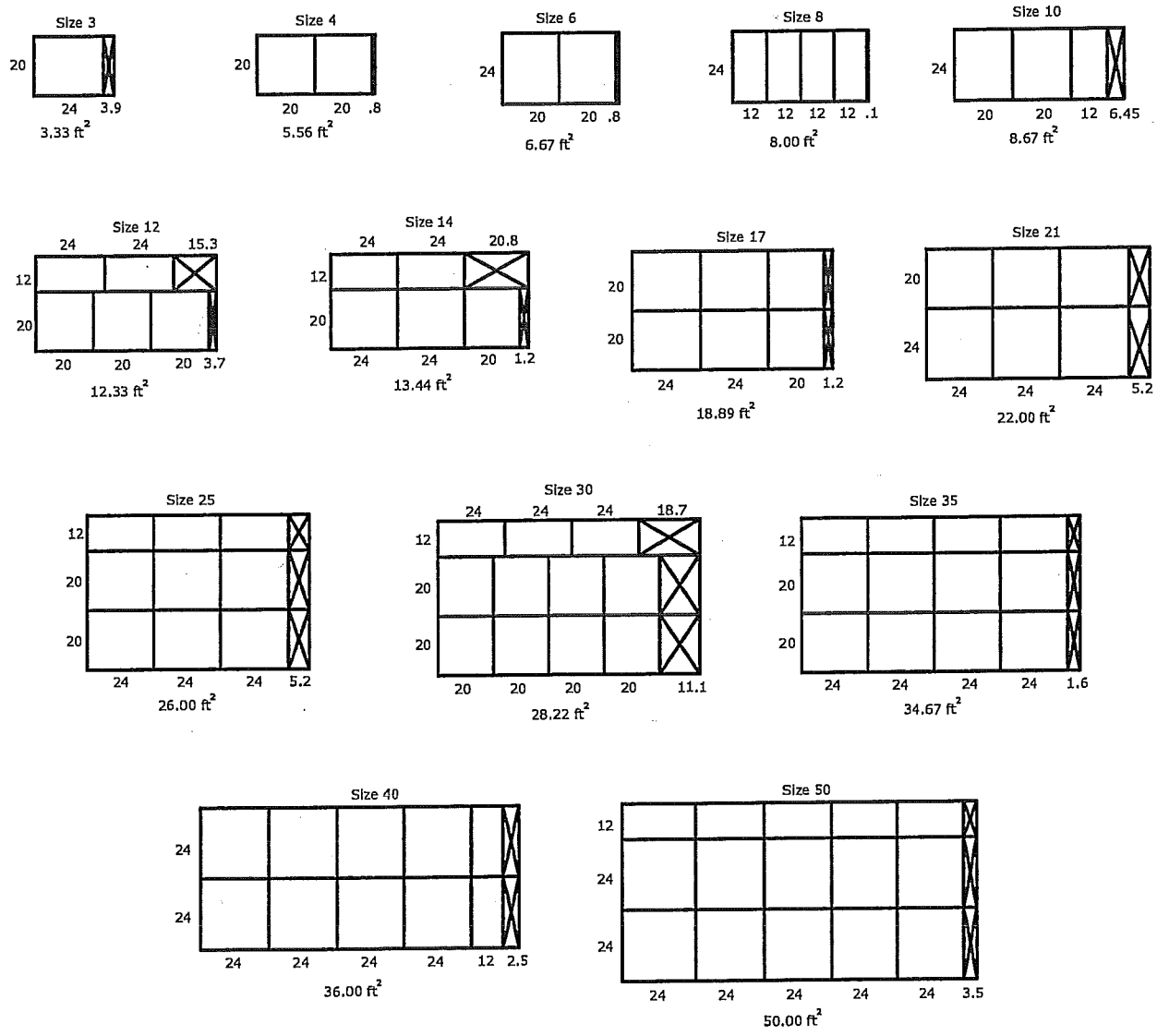

Figure 44. Bag and cartridge side-loading filter placement for unit sizes 57-100

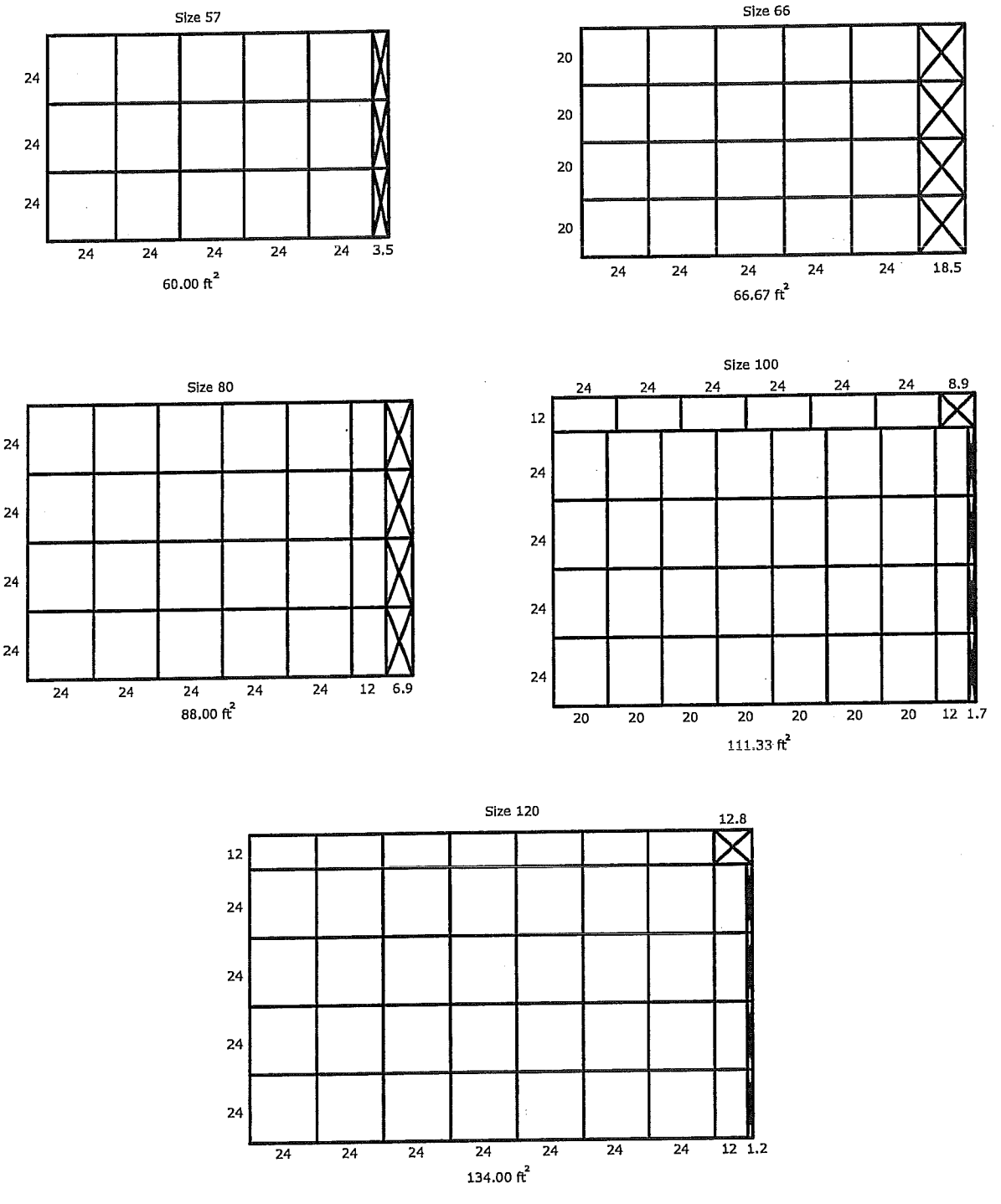

Figure 45. Flat and combination filter placement for unit sizes 3-50

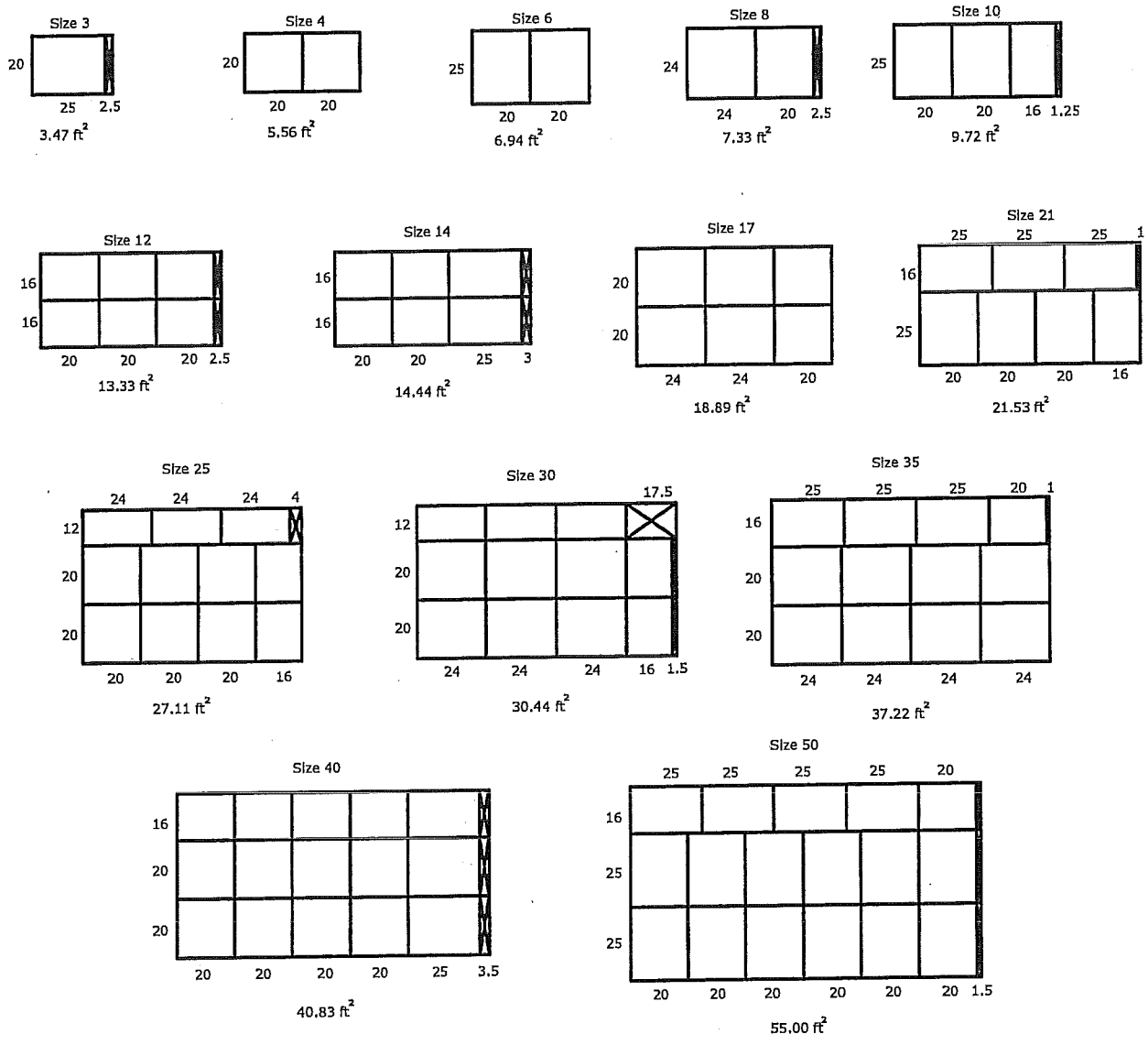

Figure 46. Flat and combination filter placement for unit sizes 57-120

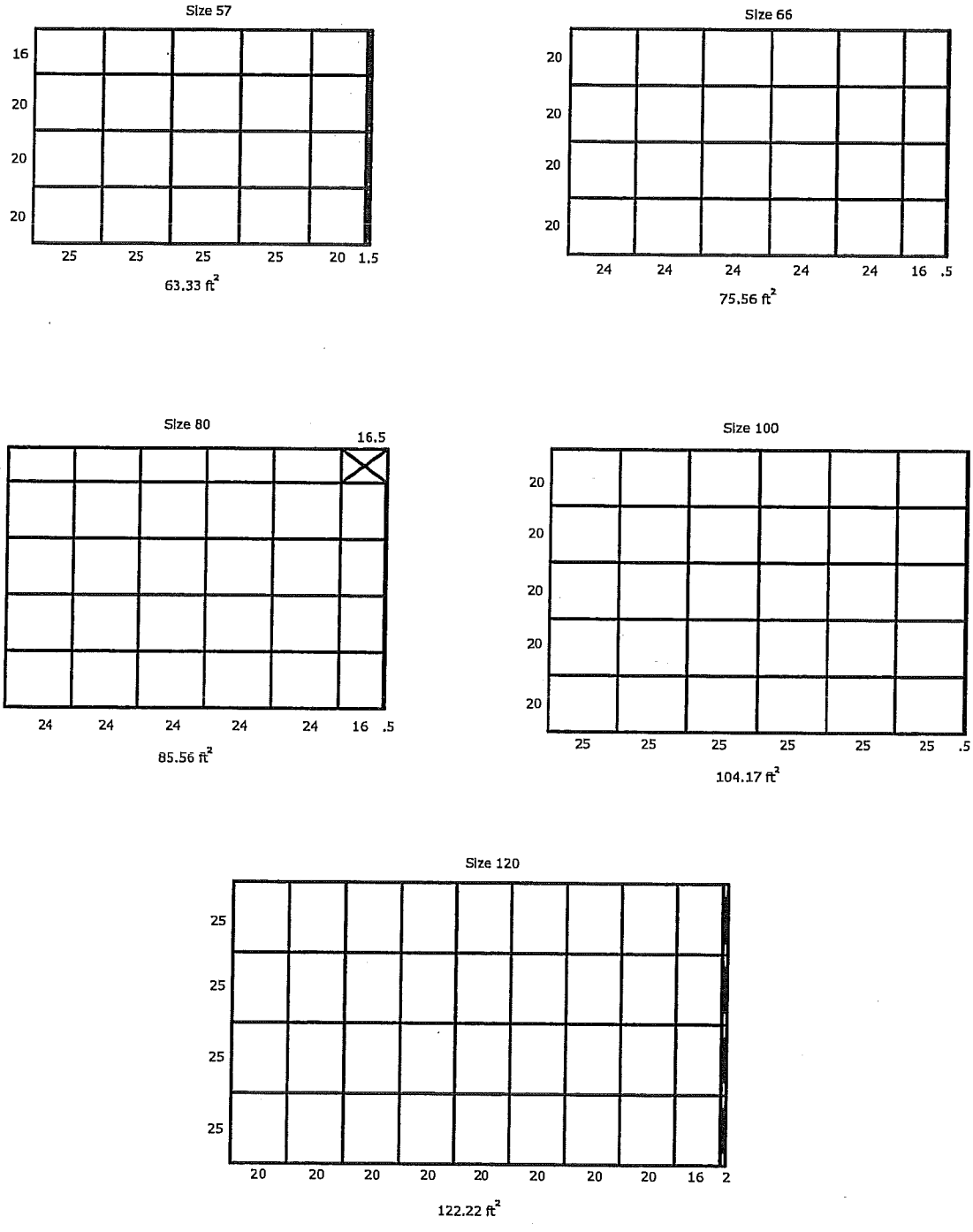

Figure 47. Front-loading bag and cartridge filters sizes 3-50

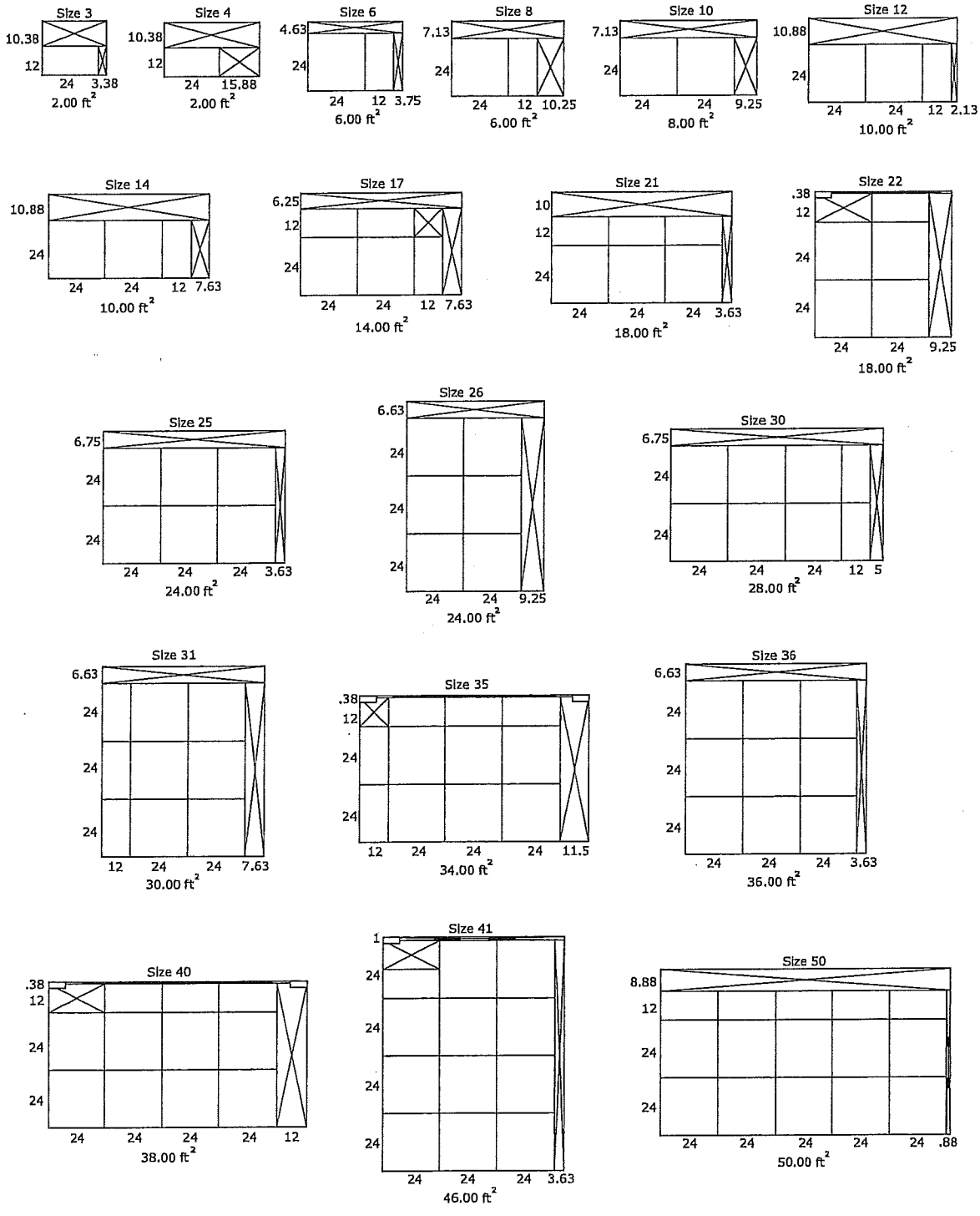

Figure 48. Front-loading bag and cartridge filters sizes 57-120

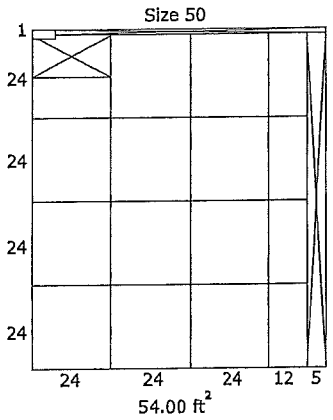

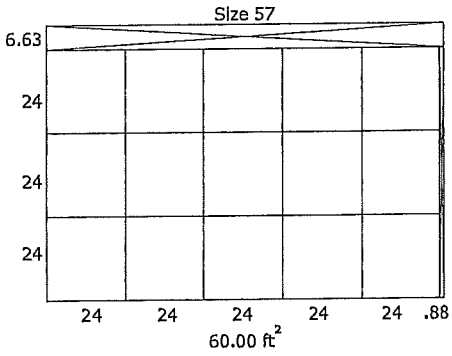

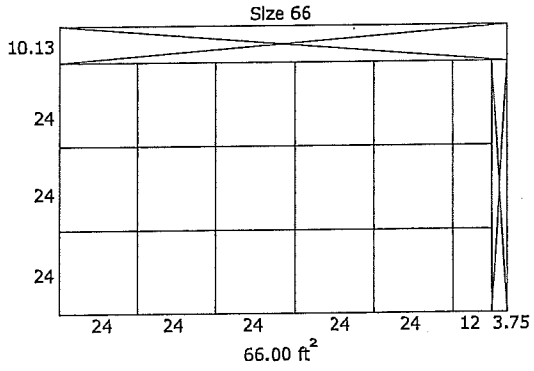

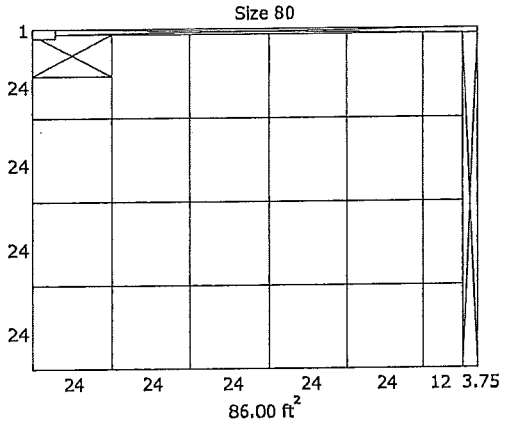

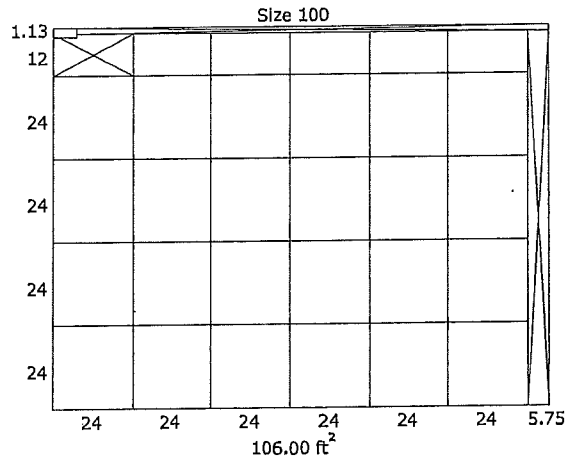

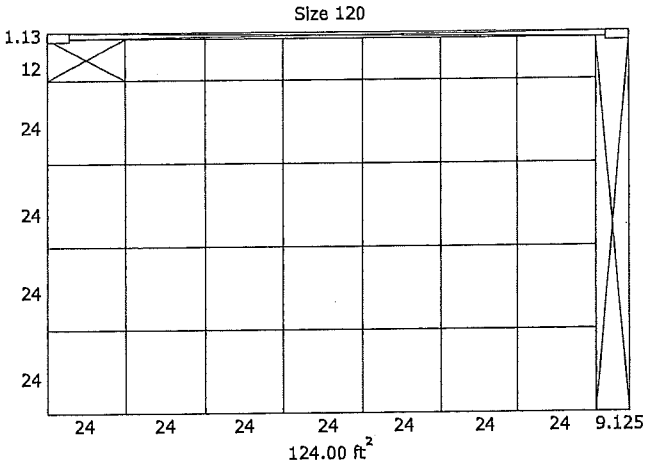

Figure 49. Front-loading HEPA filters sizes 3-50

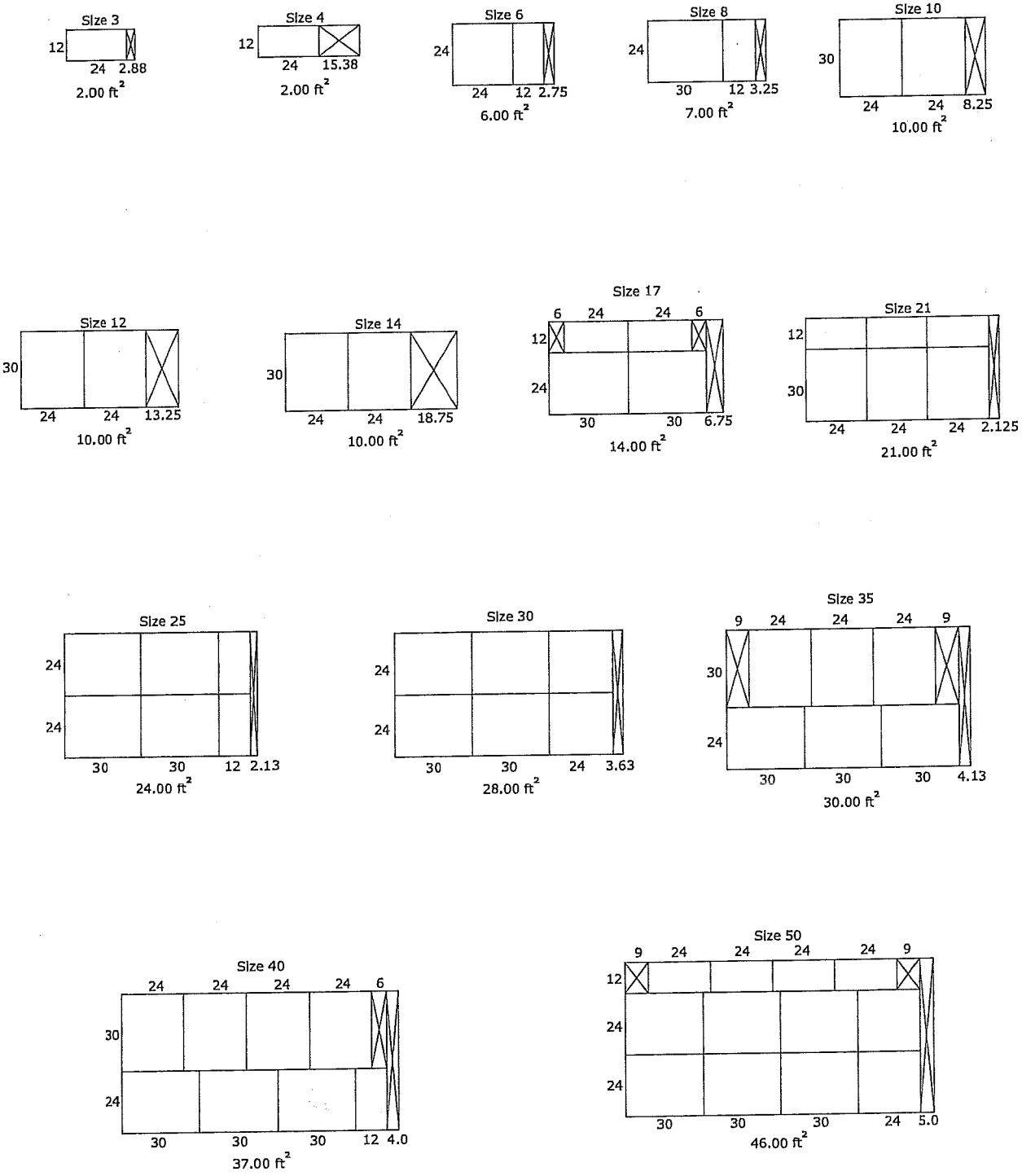

Figure 50. Front-loading HEPA filters sizes 57-120

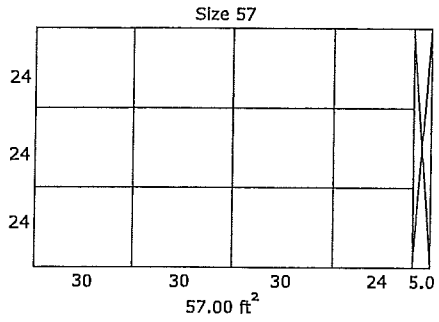

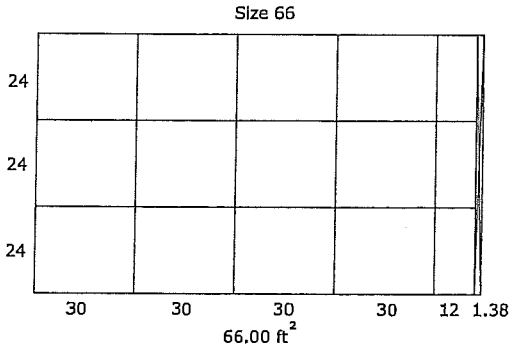

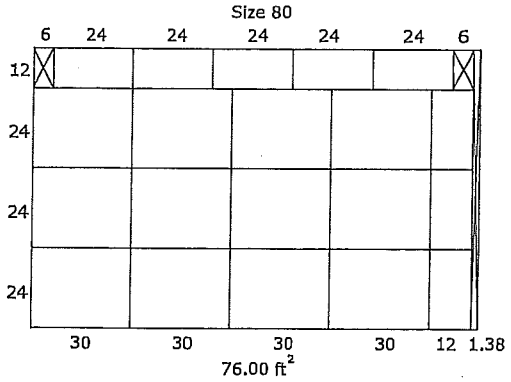

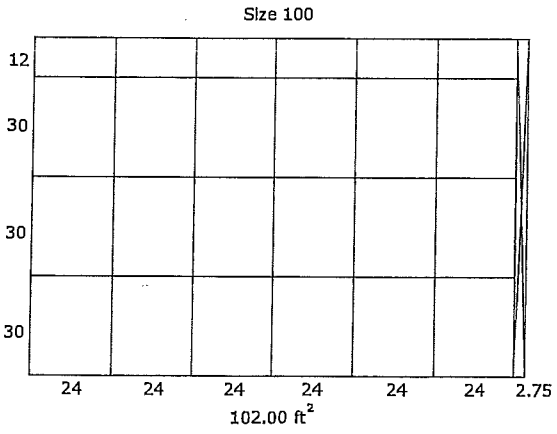

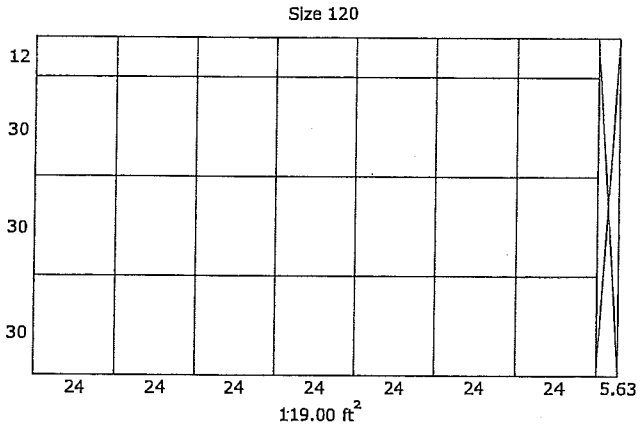

Fan Sections

The fan section can be configured as either draw-thru or blow-thru. Review the submittals and unit tagging information prior to assembly to determine placement.

Fan Isolation

The fan-and-motor assembly is internally isolated. The fan and motor bases are bolted to a minimum of four spring isolators. The isolators are secured to the fan section support base.

Shipping tie-down bolts are bolted adjacent to the isolators between the fan isolation base and the isolator support frame. The shipping tie-downs secure the isolation base to the support assembly to prevent any damage to the fan section during shipment.

Note: *Remove the tie-downs **only** if the factory-provided isolation is to be used.*

Adjusting the Isolators

Note: *For additional information regarding the safe discharge of capacitors, see PROD-SVB06A-EN.*

Once the shipping tie-downs are removed and the internal isolation is released, it may be necessary to adjust the isolators to achieve the proper operation height of the fan and motor isolation base.

Minimum required clearances are listed in Table 9. To determine the isolator clearances on all unit sizes, measure between the top of the cabinet channel and the bottom of the isolation base channel. See Figure 51, Figure 52, Figure 53, and Figure 54.

Table 9. Minimum isolator clearances (inches)

Unit Size	Fan Type	Required Clearance
3-8	FC, BC, Plenum	1.0
10-30	FC, AF, Plenum	0.5
35-57	FC, AF, Plenum	0.5
66-120	FC, AF, Plenum	1.0

Figure 51. Isolator tie-down removal for unit sizes 3-8

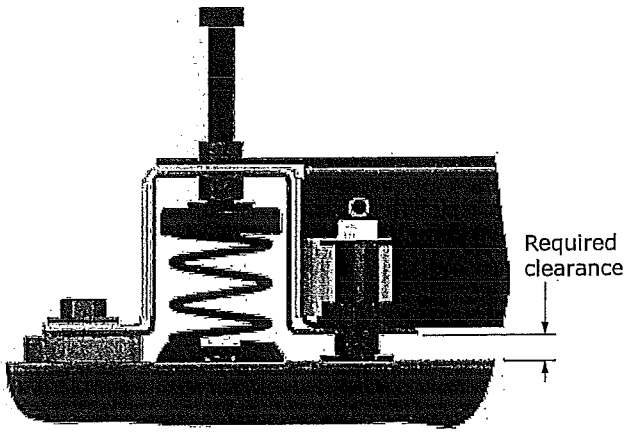

Figure 52. Isolator tie-down removal for unit sizes 10-30

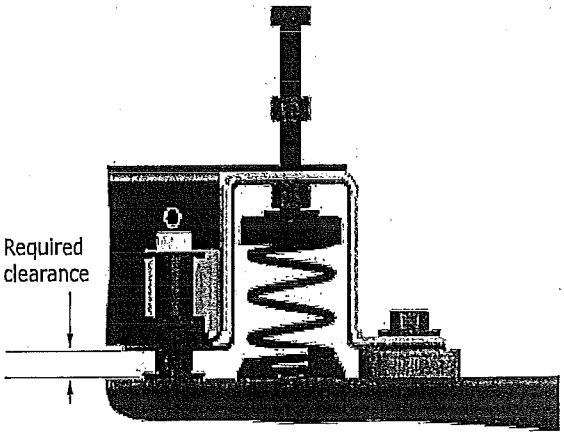

Figure 53. Isolator tie-down removal for unit sizes 66-120

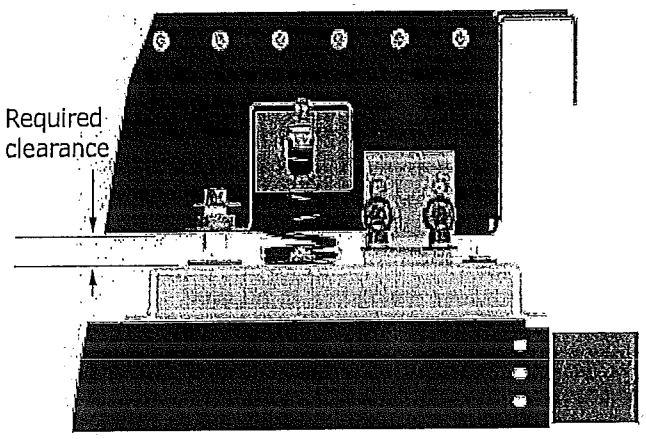

Figure 54. Belt-drive plenum fan tie down

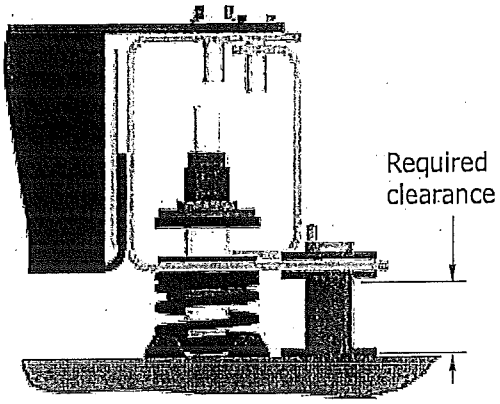

Seismic Isolation Requirements

Air handling equipment manufactured by Trane is capable of structurally and operationally withstanding the seismic response criteria as required by the International Building Codes (IBC) 2000,2003, 2006, 2009. Trane has third-party certification for IBC compliance for seismic applications for unit sizes 3-30. Certification for larger sizes is in process.

Note: *If seismic isolation has been specified, the following requirements must be adhered to for installation. Failure to follow these instruction would void the warranty.*

Anchor Requirements

Single Level Design Break

Size 3-30 - Grade to Roof Mounted (0<=Sds<=1.85) Non-Isolated

4000 psi concrete

- 3/8-inch diameter Hilti Kwik Bolt TZ carbon steel concrete anchors attached to unit base rails.
- Quantity (2) anchors at AHU ends, (quantity (1) at each side)
- Quantity (2) anchors at AHU unit splits, quantity (1) at each side, staggered.
- 2-inch minimum anchor embedment
- 4-3/8-inch minimum distance to the nearest edge
- 4-inch minimum concrete slab thickness

Steel dunnage/steel curb

3/8-inch diameter ASTM A325 or SAE grade 5 bolts attached to unit base located as noted above **or** 1-inch long 3/16-inch welds at unit base located as noted above.

Stacked Design Break

Size 3-30 – Grade to Roof Mounted (0<=Sds<=1.85) Non-Isolated

4000 psi concrete

- 1/2-inch diameter Hilti Kwik Bolt TZ carbon steel concrete anchors attached to unit base rails.
- Quantity (2) anchors at AHU ends (quantity (1) at each side).
- Quantity (2) anchors at AHU unit splits, (quantity (1) at each side, staggered).
- 3 1/4-inch minimum anchor embedment

- 7 1/2-inch minimum distance to the nearest edge
- 6-inch minimum concrete slab thickness

Steel dunnage/steel curb

1/2-inch diameter ASTM A325 or SAE Grade 5 bolts attached to unit base located as noted above **or** 1-inch long 3/16-inch welds at unit bases located as noted above.

Anchor Pattern

Figure 55. Seismic anchor pattern

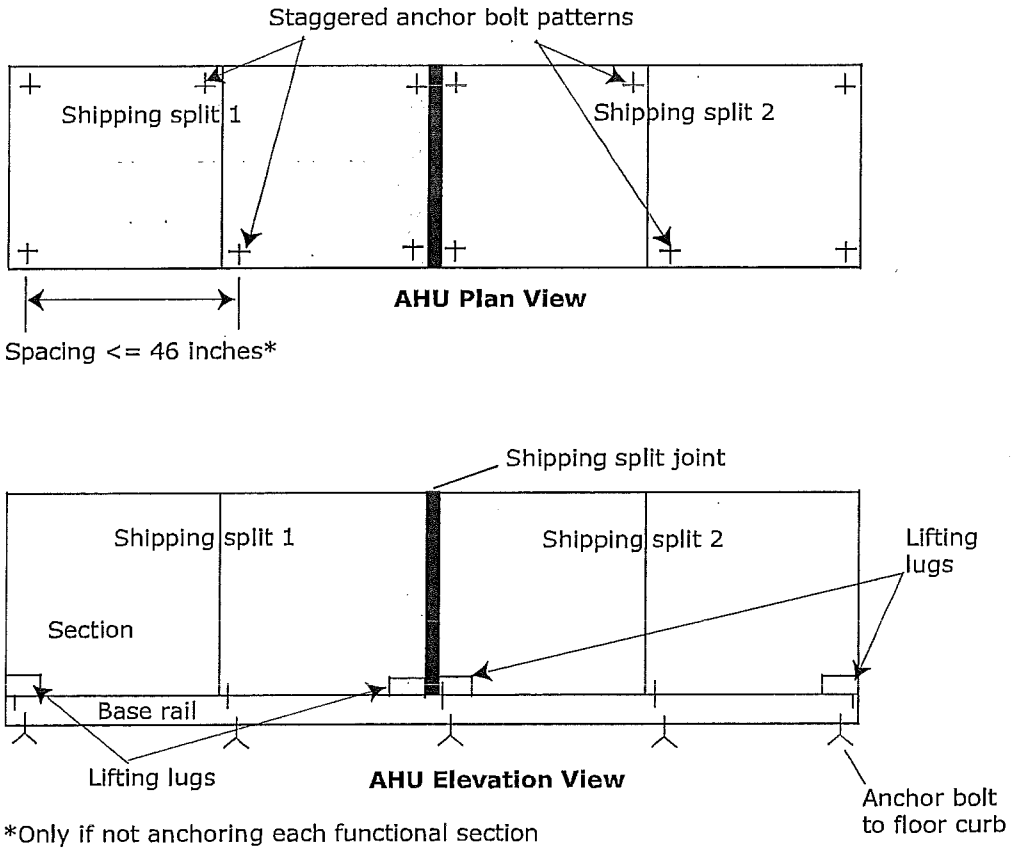

*Only if not anchoring each functional section

Each module is considered a functional section; for example, fan section, coil section, access section, etc. Anchoring of the unit needs to be placed at the designated locations according to the anchoring pattern for each functional section (see Figure 55).

If anchoring each functional section is difficult, then spacing between each anchor can be no longer than 46 inches.

Lifting lugs can be used as locations for anchoring the unit. For locations that do not have lifting lugs, additional anchors need to be installed at the construction site.

Anchor selection meets or exceeds IBC 2000, 2003, 2006 and 2009 compliance requirements.

Special Inspection per IBC Section 1704 is required on all installations. All anchors listed above must be installed to meet compliance.

Damper Sections

Dampers are factory-installed and adjusted and can be found in mixing box/economizer sections. There are two damper blade configurations available: parallel-blade and opposed-blade.

Traq™ dampers are another type of damper available in mixing box sections. Traq dampers have only one blade configuration - opposed. They have two control applications available - standard Traq dampers and low-flow Traq dampers. Low-flow Traq dampers are always not linked and consist of two damper sets - one set for minimum outside air measurement and one set for economizing. Each will have its own VCM.

The air handler is available with factory-mounted controls or end devices. If the unit is not ordered with controls or end devices, it is the installer's responsibility to provide and install the damper actuators. Size the actuators according to Table 10.

Damper Torque Requirements

Table 10. Mixing box damper torque requirements (inch pound) at 1-inch w.g. air pressure drop

Unit Size	Parallel airfoil damper only	Opposed airfoil damper only	Standard Traq damper only	Low-flow minimum OA Traq damper only	Low-flow econ Traq damper only	Parallel airfoil linked damper to parallel airfoil damper	Opposed airfoil linked damper to opposed airfoil damper	Standard Traq linked to airfoil damper	Standard Traq linked to standard Traq damper
3	9.00	6.40	18.00	n/a	n/a	10.30	7.70	19.30	36.00
4	13.10	9.30	36.00	18.00	18.00	14.90	11.20	37.90	72.00
6	17.10	12.20	36.00	18.00	18.00	19.60	14.70	38.40	72.00
8	23.30	16.60	54.00	18.00	36.00	26.60	19.90	57.30	108.00
10	29.00	20.70	54.00	18.00	36.00	33.20	24.90	58.10	108.00
12	35.70	25.50	67.50	22.50	45.00	40.70	30.60	72.60	135.00
14	39.50	28.20	67.50	22.50	45.00	45.20	33.90	73.10	135.00
17	48.90	34.90	67.50	22.50	45.00	55.90	41.90	74.50	135.00
21	60.40	43.10	99.00	33.00	66.00	69.00	51.80	107.60	198.00
25	72.40	51.70	99.00	33.00	66.00	82.80	62.10	109.30	198.00
30	84.20	60.10	108.00	36.00	72.00	96.20	72.20	120.00	216.00
35	100.20	71.50	108.00	36.00	72.00	114.50	85.90	122.30	198.00
40	110.20	78.70	108.00	36.00	72.00	125.90	94.50	119.60	198.00
50	126.30	90.20	112.50	37.50	75.00	144.30	108.20	135.70	216.00
57	154.80	110.60	112.50	37.50	75.00	176.90	132.70	164.20	198.00
66	177.60	126.80	150.00	37.50	75.00	202.90	152.20	187.00	264.00
80	210.30	150.20	187.50	37.50	112.50	240.30	180.20	223.10	360.00
100	272.00	194.30	225.00	37.50	150.00	310.90	233.20	284.90	396.00
120	322.40	230.30	225.00	37.50	150.00	368.50	276.30	335.20	432.00

Table 11. Side Traq damper - standard flow mixing box

Unit size	Damper dia (in)	Damper qty	Damper torque (in-lb)	Total torque (in-lb)	Actuator torque (max) (in-lb)	Actuator qty	Face-to-face linkage	Linkage on face
3	13.00	1	18.00	18.00	42	1	No	No
4	13.00	1	18.00	18.00	42	1	No	No
6	13.00	1	18.00	18.00	42	1	No	No
8	13.00	1	18.00	18.00	42	1	No	No
10	16.00	1	22.50	22.50	42	1	No	No
12	16.00	1	22.50	22.50	42	1	No	No
14	13.00	2	18.00	36.00	42	1	No	Yes
17	13.00	2	18.00	36.00	42	1	No	Yes
21	16.00	2	22.50	45.00	160	1	No	Yes
25	16.00	2	22.50	45.00	160	1	No	Yes
30	20.00	2	33.00	66.00	160	1	No	Yes
35	20.00	2	33.00	66.00	160	1	No	Yes
40	20.00	2	33.00	66.00	160	1	No	Yes
50	24.00	2	36.00	72.00	160	1	No	Yes
57	24.00	2	36.00	72.00	160	1	No	Yes
66	24.00	2	36.00	72.00	160	1	No	Yes
80	28.00	2	37.50	75.00	160	1	No	Yes
100	28.00	3	37.50	112.50	160	1	No	Yes
120	24.00	4	36.00	144.00	160	1	No	Yes

Table 12. Side Traq damper - standard flow diagonal economizer

Unit sizes	Damper dia (in)	Damper qty	Damper torque (in-lb)	Total torque (in-lb)	Actuator torque (max) (in-lb)	Actuator qty	Face-to-face linkage	Linkage on face
3	13.00	1	18.0	18.0	42	1	No	No
4	13.00	2	18.0	36.0	42	2	No	No
6	13.00	2	18.0	36.0	42	1	No	Yes
8	13.00	2	18.0	36.0	42	1	No	Yes
10	16.00	2	22.5	45.0	160	1	No	Yes
12	16.00	2	22.5	45.0	160	1	No	Yes
14	16.00	2	22.5	45.0	160	1	No	Yes
17	13.00	4	18.0	72.0	160	1	No	Yes
21	20.00	2	33.0	66.0	160	1	No	Yes
25	16.00	4	22.5	90.0	160	1	No	Yes
30	20.00	3	33.0	99.0	160	1	No	Yes
35	28.00	2	37.5	75.0	160	2	No	No
40	28.00	2	37.5	75.0	160	1	No	Yes
50	24.00	3	36.0	108.0	160	1	No	Yes
57	24.00	4	36.0	144.0	160	1	No	Yes
66	28.00	3	37.5	112.5	160	1	No	Yes
80	28.00	4	37.5	150.0	160	1	No	Yes
100	28.00	5	37.5	187.5	160	2	No	Yes
120	28.00	5	37.5	187.5	160	2	No	Yes

Table 13. Single -Side Traq low flow mixing box

Unit size	Damper Dia (in)	Damper Qty	Damper Torque (in-lb)	Low flow Traq torque (in-lb)	Remained Traq Torque (in-lb)	Actuator qty for low flow Traq	Actuator qty for remained damper	Actuator total Qty	Face to face Linkage	Linkage on face
14	13.00	2	18.0	18.00	18.00	1	1	2	No	No
17	13.00	2	18.0	18.00	18.00	1	1	2	No	No
21	16.00	2	22.5	22.50	22.50	1	1	2	No	No
25	16.00	2	22.5	22.50	22.50	1	1	2	No	No
30	20.00	2	33.0	33.00	33.00	1	1	2	No	No
35	20.00	2	33.0	33.00	33.00	1	1	2	No	No
40	20.00	2	33.0	33.00	33.00	1	1	2	No	No
50	24.00	2	36.0	36.00	36.00	1	1	2	No	No
57	24.00	2	36.0	36.00	36.00	1	1	2	No	No
66	24.00	2	36.0	36.00	36.00	1	1	2	No	No
80	28.00	2	37.5	37.50	37.50	1	1	2	No	No
100	28.00	3	37.5	37.50	75.00	1	1	2	No	Yes
120	24.00	4	36.0	36.00	108.00	1	1	2	No	Yes

Table 14. Dual-side Traq low flow mixing box

Unit size	Damper dia (in)	Damper qty	Damper torque (in-lb)	Low flow Traq torque (in-lb)	Remained Traq torque (in-lb)	Actuator qty for low flow Traq	Actuator qty for remained damper	Actuator total qty	Face to face Linkage	Linkage on face
3	13.00	2	18.00	18.00	18.00	1	1	2	No	No
4	13.00	2	18.00	18.00	18.00	1	1	2	No	No
6	13.00	2	18.00	18.00	18.00	1	1	2	No	No
8	13.00	2	18.00	18.00	18.00	1	1	2	No	No
10	16.00	2	22.50	22.50	22.50	1	1	2	No	No
12	16.00	2	22.50	22.50	22.50	1	1	2	No	No
14	13.00	4	18.00	18.00	54.00	1	2	3	No	No
17	13.00	4	18.00	18.00	54.00	1	2	3	No	No
21	16.00	4	22.50	22.50	67.50	1	2	3	No	No
25	16.00	4	22.50	22.50	67.50	1	2	3	No	No
30	20.00	4	33.00	33.00	99.00	1	2	3	No	No
35	20.00	4	33.00	33.00	99.00	1	2	3	No	No
40	20.00	4	33.00	33.00	99.00	1	2	3	No	No
50	24.00	4	36.00	36.00	108.00	1	2	3	No	No
57	24.00	4	36.00	36.00	108.00	1	2	3	No	No
66	24.00	4	36.00	36.00	108.00	1	2	3	No	No
80	28.00	4	37.50	37.50	112.50	1	2	3	No	No
100	28.00	6	37.5	37.5	187.5	1	2	3	No	Yes
120	24.00	8	36.0	36.0	252.0	1	2	3	No	Yes

Table 15. Side Traq Low-Flow Diagonal Economizer

Unit size	Damper dia (in)	Damper qty	Damper torque (in-lb)	Low flow Traq torque (in-lb)	Remainder Traq torque (in-lb)	Actuator qty for low flow Traq	Actuator qty for remainder damper	Actuator face to face total qty	Linkage	Linkage on face
4	13.00	2	18.0	18.00	18.00	1	1	2	No	No
6	13.00	2	18.0	18.00	18.00	1	1	2	No	No
8	13.00	2	18.0	18.00	18.00	1	1	2	No	No
10	16.00	2	22.5	22.50	22.50	1	1	2	No	No
12	16.00	2	22.5	22.50	22.50	1	1	2	No	No
14	16.00	2	22.5	22.50	22.50	1	1	2	No	No
17	13.00	4	18.0	18.00	54.00	1	1	2	No	Yes
21	20.00	2	33.0	33.00	33.00	1	1	2	No	No
25	16.00	4	22.5	22.50	67.50	1	1	2	No	Yes
30	20.00	3	33.0	33.00	66.00	1	1	2	No	Yes
35	28.00	2	37.5	37.50	37.50	1	1	2	No	No
40	28.00	2	37.5	37.50	37.50	1	1	2	No	No
50	24.00	3	36.0	36.00	72.00	1	1	2	No	Yes
57	24.00	4	36.0	36.00	108.00	1	1	2	No	Yes
66	28.00	3	37.5	37.50	75.00	1	1	2	No	Yes
80	28.00	4	37.5	37.50	112.50	1	1	2	No	Yes
100	28.00	5	37.5	37.50	150.00	1	1	2	No	Yes
120	28.00	5	37.5	37.50	150.00	1	1	2	No	Yes

Table 16. Side rectangle angle damper - 2000 fpm

Unit size	A (in)	B (in)	Damper qty	Torque (in-lb)	Actuator torque (max) (in-lb)	Actuator qty	Linkage
3	11.25	13.97	1	13.1	42	1	No
4	11.25	13.97	1	13.1	42	1	No
6	15.75	13.97	1	18.3	42	1	No
8	20.25	13.97	1	23.6	42	1	No
10	20.25	16.30	1	27.5	42	1	No
12	27.00	16.30	1	36.7	42	1	No
14	23.25	19.72	1	38.2	42	1	No
17	30.50	19.72	1	50.1	160	1	No
21	36.75	19.72	1	60.4	160	1	No
25	45.75	19.72	1	75.2	160	1	No
30	48.50	20.22	1	81.7	160	1	No
35	45.50	25.47	1	96.6	160	1	No
40	48.00	28.35	1	113.4	160	1	No
50	56.75	31.22	1	147.6	160	1	No
57	65.75	31.22	1	171.1	160	2	No
66	70.50	31.22	1	183.4	160	2	No
80	85.00	31.22	1	221.1	160	2	No
100	95.00	36.97	1	292.7	160	2	No
120	96.00	42.72	1	341.8	160	3	No

Table 17. Side Rectangle damper per 1200 fpm - Diagonal Economizer with OA rectangle dampers

Unit size	A (in)	B (in)	Damper qty	Torque (in-lb)	Actuator torque (max) (in-lb)	Actuator qty	Linkage
3	12.50	13.97	1	14.60	42	1	No
4	13.75	19.72	1	22.60	42	1	No
6	18.75	19.72	1	30.80	42	1	No
8	24.25	19.72	1	39.90	42	1	No
10	23.50	25.47	1	49.90	160	1	No
12	29.00	25.47	1	61.60	160	1	No
14	26.00	31.22	1	67.60	160	1	No
17	32.00	31.22	1	83.30	160	1	No
21	40.00	31.22	1	104.10	160	1	No
25	48.00	31.22	1	124.90	160	1	No
30	47.00	36.97	1	144.80	160	1	No
35	48.00	42.72	1	170.90	160	2	No
40	48.00	48.47	1	193.90	160	2	No
50	57.75	48.47	1	233.30	160	2	No
57	67.50	48.47	1	272.60	160	2	No
66	69.50	28.35	2	277.10	160	2	Yes
80	83.00	28.35	2	330.90	160	3	Yes
100	95.25	31.22	2	418.20	160	3	Yes
120	95.00	36.97	2	493.90	160	4	Yes

Table 18. Short mixing box rectangle damper - top, back or bottom only

Unit size	A (in)	B (in)	Damper Qty	Torque (in-lb.)	Actuator Torque (max) (in-lb.)	Actuator qty	Linkage
3	13.00	8.22	1	5.2	42	1	No
4	19.75	8.22	1	7.9	42	1	No
6	27.00	8.22	1	10.8	42	1	No
8	35.00	8.22	1	14.0	42	1	No
10	43.75	8.22	1	17.5	160	1	No
12	32.00	13.97	1	21.7	160	1	No
14	60.00	8.22	1	24.0	160	1	No
17	43.50	13.97	1	29.5	160	1	No
21	53.75	13.97	1	36.5	160	1	No
25	64.50	13.97	1	43.8	160	1	No
30	55.00	19.72	1	52.7	160	1	No
35	64.00	19.72	1	61.4	160	1	No
40	56.50	25.47	1	70.0	160	1	No
50	68.00	25.47	1	84.2	160	1	No
57	66.00	31.22	1	100.2	160	1	No
66	58.50	19.72	2	112.2	160	1	No
80	54.25	25.47	2	134.3	160	1	No
100	65.25	25.47	2	161.6	160	2	No
120	66.00	31.22	2	200.3	160	2	No

Table 19. Energy recovery recirculation parallel damper

Unit size	A (in)	B (in)	Damper qty	Torque (in-lbs)	Actuator torque (max) (in-lbs)	Actuator qty	Linkage
3	16.00	13.97	1	10.9	42	1	No
4	28.50	13.97	1	19.4	42	1	No
6	28.50	13.97	1	19.4	42	1	No
8	35.00	13.97	1	23.8	42	1	No
10	46.00	13.97	1	31.2	42	1	No
12	51.00	13.97	1	34.6	42	1	No
14	56.50	13.97	1	38.4	160	1	No
17	56.50	13.97	1	38.4	160	1	No
21	64.50	13.97	1	43.8	160	1	No
25	64.50	13.97	1	43.8	160	1	No
30	78.00	13.97	1	53.0	160	1	No
35	84.50	13.97	1	57.4	160	1	No
40	97.00	13.97	1	65.9	160	1	No
50	110.00	13.97	1	74.7	160	1	No

Table 20. Energy recovery bypass opposed blade damper

Unit size	A (in)	B (in)	Damper qty	Torque in-lb	Actuator Torque (max) (in-lbs)	Actuator qty	Linkage
3 - 8	18.00	8.22	1	5.10	42	1	No
8 - 14	32.00	8.22	1	9.10	42	1	No
10 - 17	41.75	8.22	1	11.90	42	1	No
12 - 21	53.50	8.22	1	15.30	42	1	No
21 - 50	52.50	13.97	1	25.50	160	1	No
17, 21	61.50	8.22	1	17.60	42	1	No
21 - 30	66.00	8.22	1	18.80	42	1	No
25 - 50	65.00	13.97	1	31.50	160	1	No
21	70.00	8.22	1	20.00	42	1	No
35 - 50	84.50	13.97	1	41.00	160	1	No
35 - 50	75.00	13.97	1	36.40	160	1	No
40 - 50	102.00	13.97	1	49.50	160	1	No
50	113.00	13.97	1	54.80	160	1	No

Table 21. Internal face-and-bypass torque requirements

Unit size	Torque (in-lb)
3	12.8
4	19.7
6	20.9
8	31.1
10	39.2
12	54.8
14	59.9
17	70.5
21	91.3
25	103.5
30	123.0
35	133.7
40	148.6
50	206.7
57	225.7
66	278.2
80	321.5
100	416.1
120	498.7

Table 22. External face-and-bypass torque requirements

Unit size	Bypass Torque (in-lb)	Face Torque (in-lb)
3	8.4	13.8
4	13.6	21.3
6	13.6	27.5
8	16.4	32.5
10	21.0	40.9
12	23.1	54.9
14	25.5	60.1
17	25.5	71.1
21	28.8	92.5
25	28.8	105.0
30	34.5	124.7
35	34.7	133.7
40	35.0	148.6
50	40.4	206.7
57	40.4	225.7
66	85.3	278.2
80	85.3	321.5
100	96.0	416.1
120	117.2	498.7

Mixing section and economizer dampers are designed for the damper actuators to be direct coupled and installed in the air stream. If other provisions are required, modifications to the section will be the responsibility of the installing contractor.

Opposed-Blade and Parallel-Blade Dampers

Opposed-blade and parallel-blade airfoil dampers in unit sizes 3-120 have centered dampers with an internal jack-shaft (see Figure 56). A 95-degree actuator rotation gives a 90-degree blade travel.

Note: *Damper blades should be checked for proper operation from full open to full closed position before unit start up. Damper blade positioning may have changed due to shipping and handling vibrations.*

Figure 56. Typical mixing box configurations for unit sizes 3 to 120

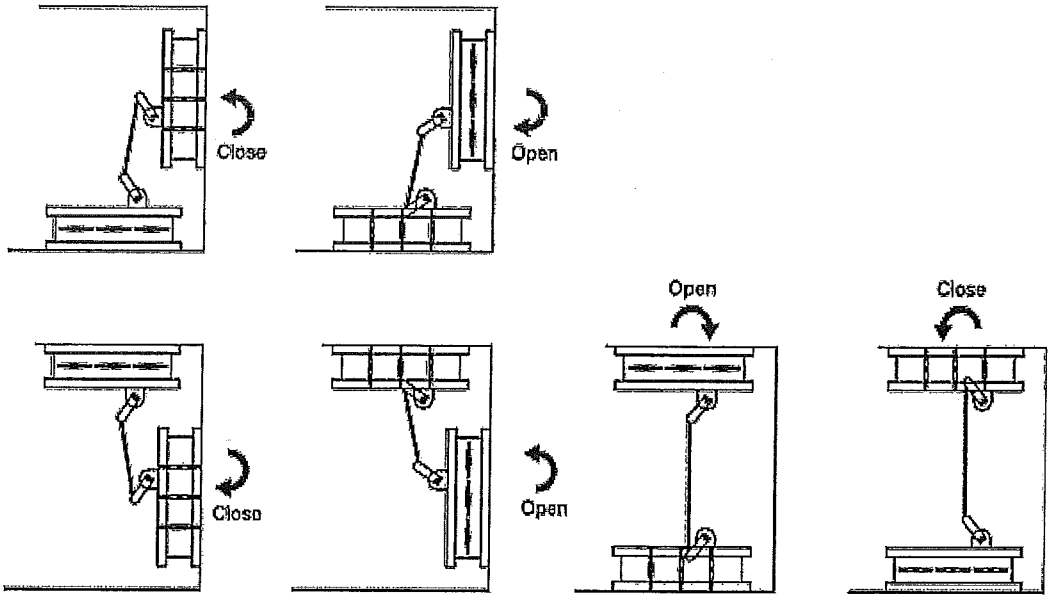

Duct Connections

All duct connections to the air handlers should be installed in accordance with the standards of the National Fire Protection Association (NFPA):

- NFPA 90A for installing air conditioning and ventilating systems other than residence type.
- NFPA 90B for residence-type warm air heating and air-conditioning systems.

Fan Discharge Connections

To ensure the highest fan efficiency, duct turns and transitions must be made carefully, minimizing air friction losses and turbulence. Proper ductwork installation, as outlined by such organizations as SMACNA (Sheet Metal and Air Conditioning Contractors National Association, Inc.), should be followed closely.

Fan sections with rectangular and round openings have a one-inch flange on the discharge that can be used to attach the duct. When using lined ducts, the insulation should not obstruct the discharge opening. For plenum fan sections with bellmouth fittings, see "Bellmouth Discharge Connections" on page 75.

Connections made directly to the discharge opening of a housed fan should have a minimum of three fan diameters of straight duct before any turns or transitions. The ductwork should be the same size as the fan discharge opening. The first turn of the connection should be in the same direction as the fan rotation as shown in Figure 57. The air that the fan discharges into the duct is extremely turbulent and requires some length of duct to stabilize. Abrupt changes in ductwork directly off the fan discharge may adversely affect fan performance and acoustics.

Figure 57. Typical discharge ductwork recommendations

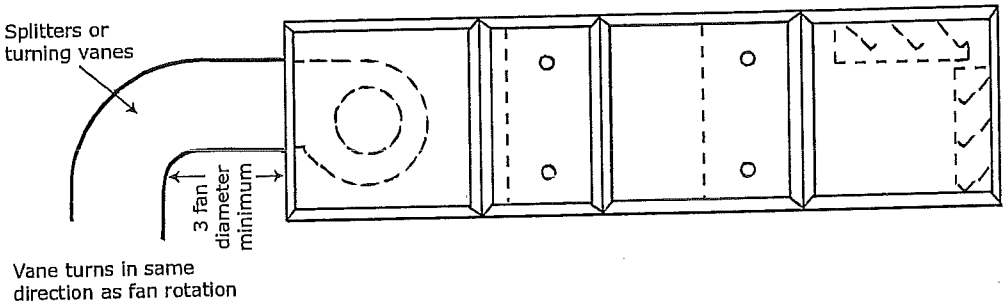

Damper Connections

For standard damper sections, size the attached ductwork to fit the opening of the damper. The duct opening dimensions should be in the unit submittals. Ensure the insulation does not obstruct the damper opening when using a lined duct (see Figure 58 and Figure 59).

Figure 58. Typical section with duct flat/flange connection- uninsulated or externally insulated

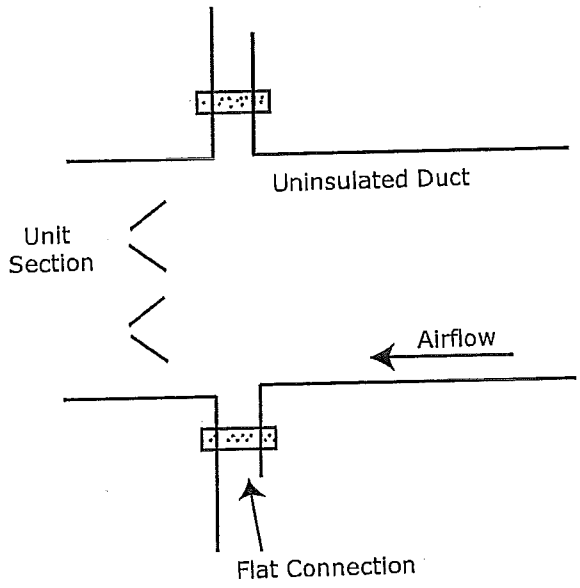

Figure 59. Typical section with duct flat/flange connection- internally insulated

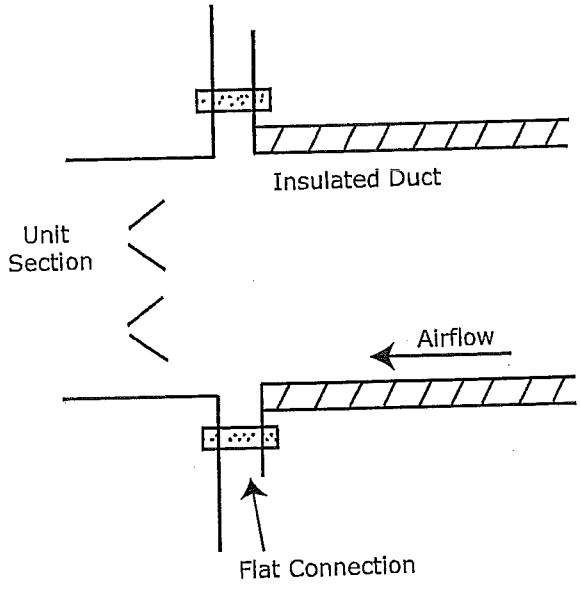

Bottom Opening Duct Installation

1. Install gasket to duct flange to ensure air tight seal.
2. Install duct into place underneath framed opening in unit base per Figure 60. Refer to factory curb layout provided with unit submittals for duct size and location.

Figure 60. Field-supplied duct connection to AHU bottom supply/return air opening

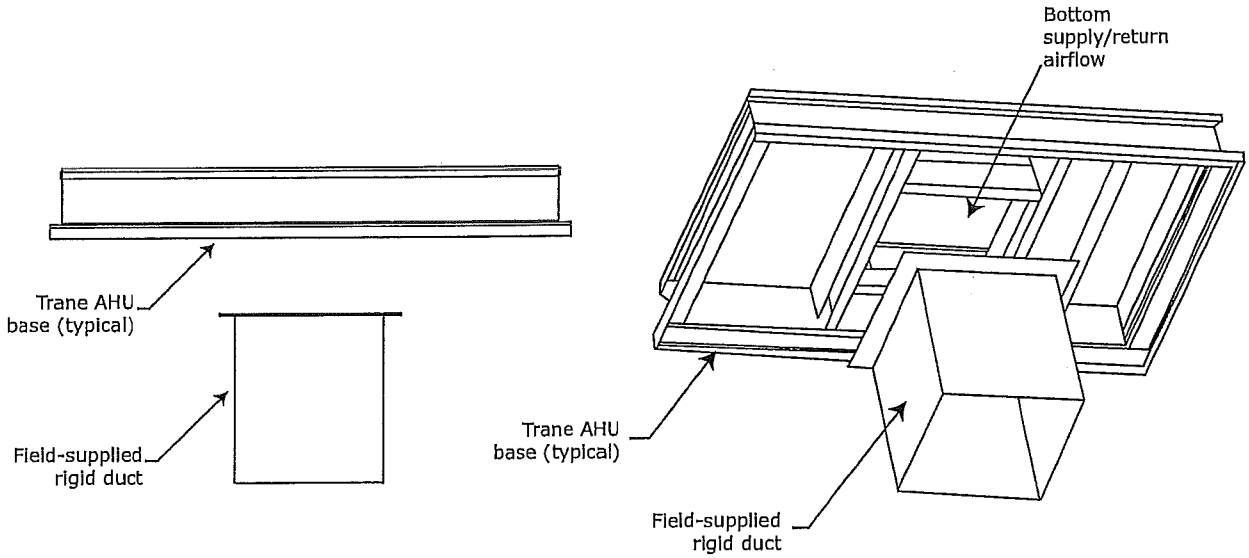

3. Bottom of unit base elevation is flush with duct opening in bottom of unit (see Figure 61 and Figure 62).

Figure 61. Field-supplied duct connection details - curb mount

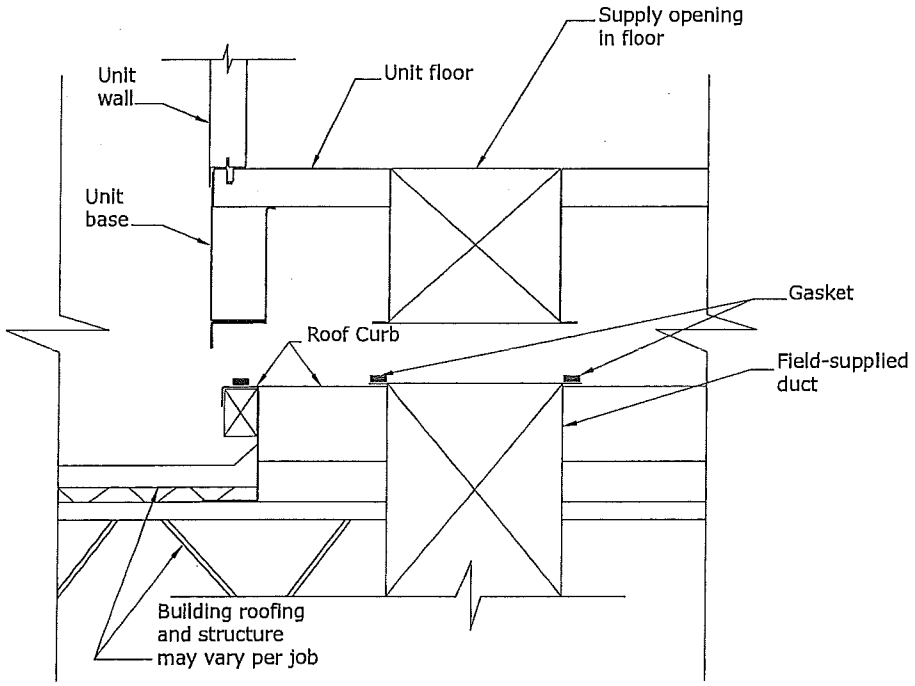

Figure 62. Field-supplied duct connection details - pier mount

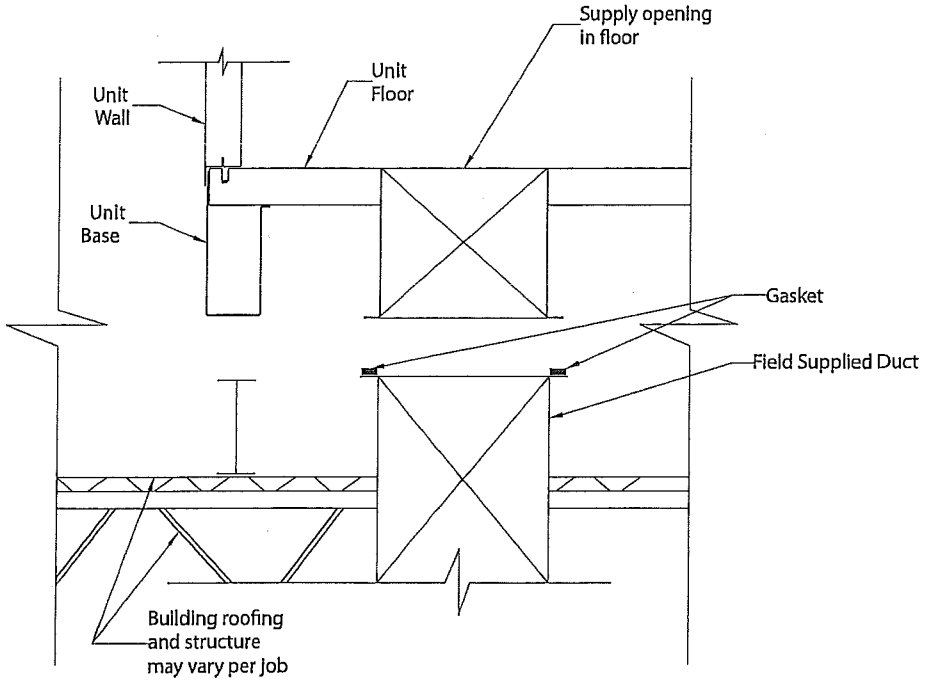

Discharge Plenum Connections

Discharge plenum sections are available with or without openings. Sections with rectangular and round openings have a framed opening that can be used to secure the duct to the frames. If the duct is lined, it is important the insulation does not obstruct the opening of the section.

For a discharge plenum with field-cut openings, attach the duct to the side panel.

Bellmouth Discharge Connections

Round duct connections to be fastened to plenum fan and discharge plenum sections with bellmouth discharge openings should be sized to attach to the casing or directly to the bellmouth fitting. Attachment to the casing requires the round duct diameter to be sized two inches larger than the nominal bellmouth outlet. An angle ring with a flat flange should be affixed to the round duct to secure the duct to the casing (see Figure 63). Attachment to the bellmouth fitting requires the duct and fitting to be insulated by the installing contractor up to the bellmouth radius to prevent condensation (see Figure 64). The bellmouth fitting extends through the casing by one inch.

Figure 63. Securing round duct to casing over bellmouth outlet

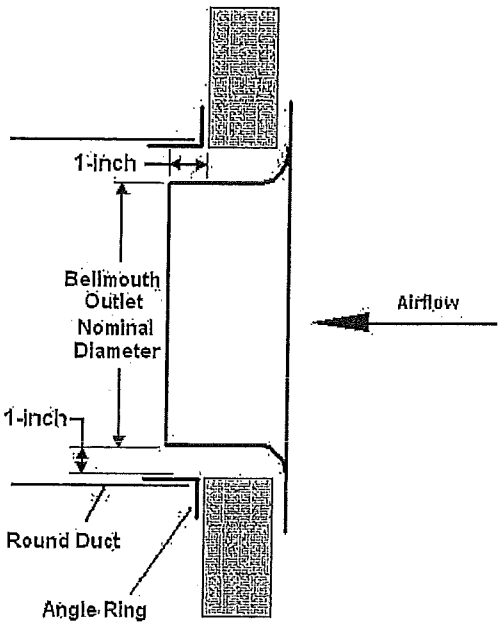

Figure 64. Securing round duct to bellmouth outlet

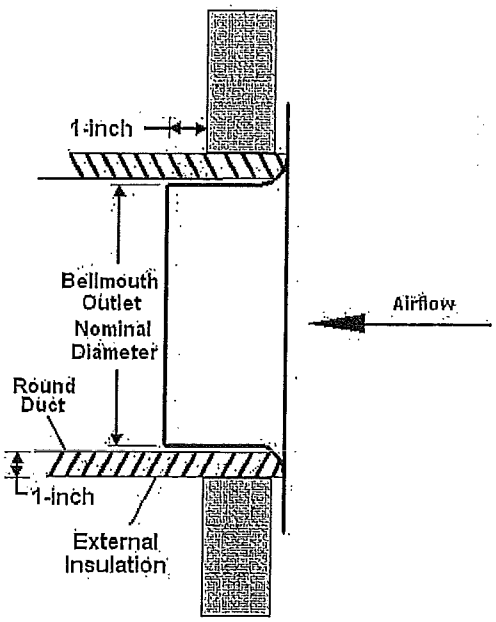

Traq Damper Connections

Size the duct connections to attach to the specified portion on the face of the mixing box that the duct connection completely covers all of the Traq damper.

For a mitered corner, provide one hydraulic duct diameter between the entering face of the Traq dampers and the duct turn. For a radius elbow, or sweep, place the elbow directly against the face of the Traq dampers (see Figure 65).

Figure 65. Traq damper duct connections

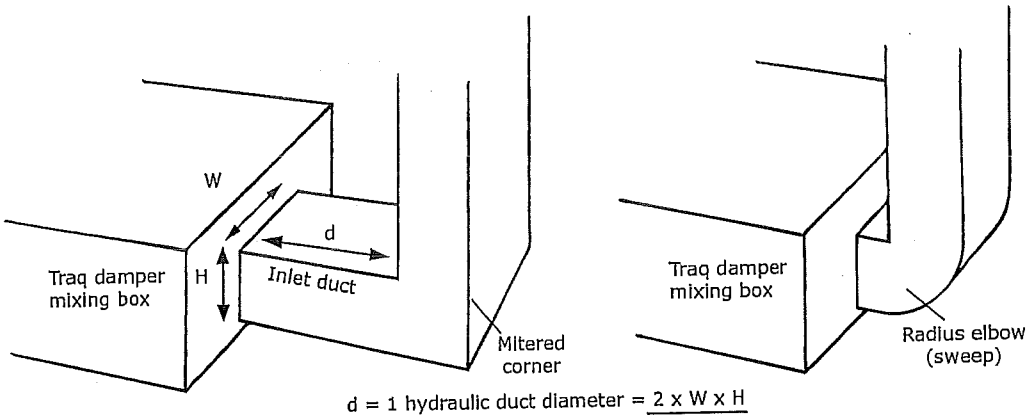

$$d = 1 \text{ hydraulic duct diameter} = \frac{2 \times W \times H}{W + H}$$

External Face-and-Bypass Connections

The external face-and-bypass damper sections will require a field-fabricated duct to direct the bypass air into the appropriate section. Duct sizing recommendations are listed in Table 23.

Table 23. Recommended bypass duct sizes (inches)

Unit size	H	W	L
3	16	20	14
4	18	33	16
6	18	33	16
8	18	39	16
10	18	50	16
12	22	55	20
14	22	61	20
17	22	61	20
21	28	69	26
25	28	69	26
30	28	82	26
35	45	80	36
40	45	93	36
50	45	106	36
57	47	106	40
66	48	121	40
80	56	121	48
100	56	135	48
120	56	162	48

When attaching a bypass duct to a downstream fan section or access section, the section will have a factory-provided opening. (see Figure 66, Figure 67, and Figure 68.)

When bypassing into an access section, remove a panel. It is not necessary to cut an opening.

Figure 66. External face-and-bypass with duct configuration designed to bypass air into a vertical fan section

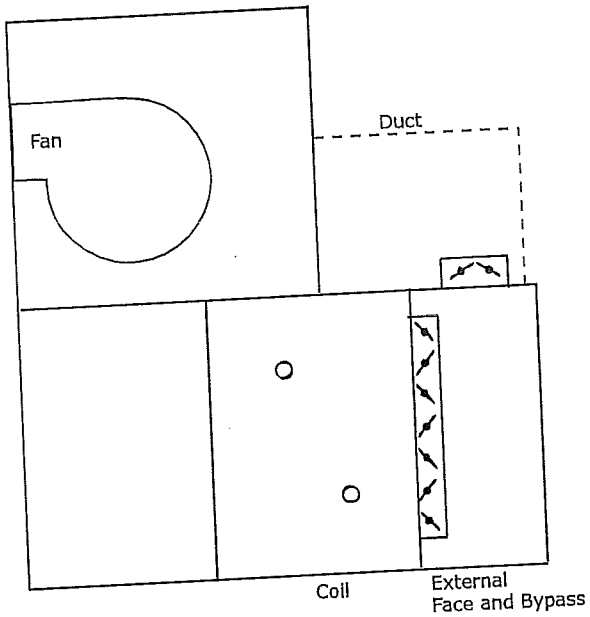

Figure 67. External face-and-bypass with duct configuration designed to bypass air around one coil

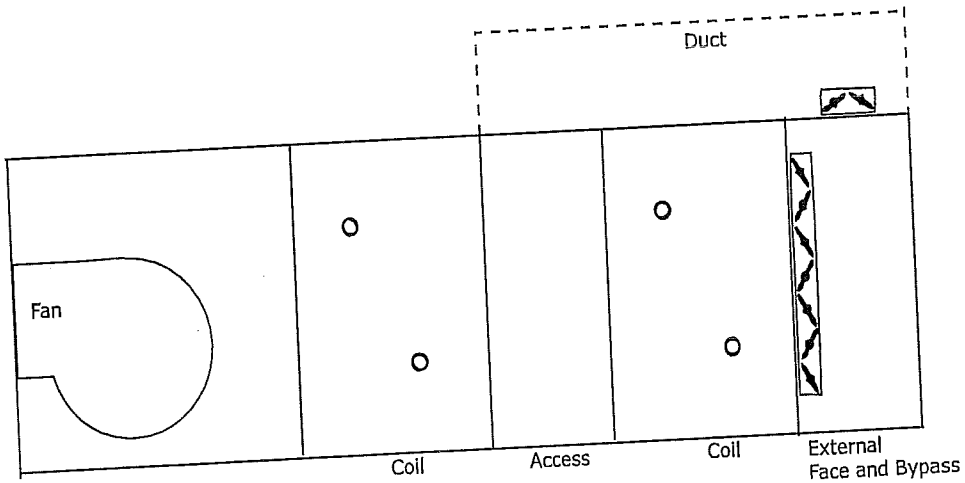

Figure 68. External face-and-bypass with duct configuration designed to bypass air into a horizontal fan section

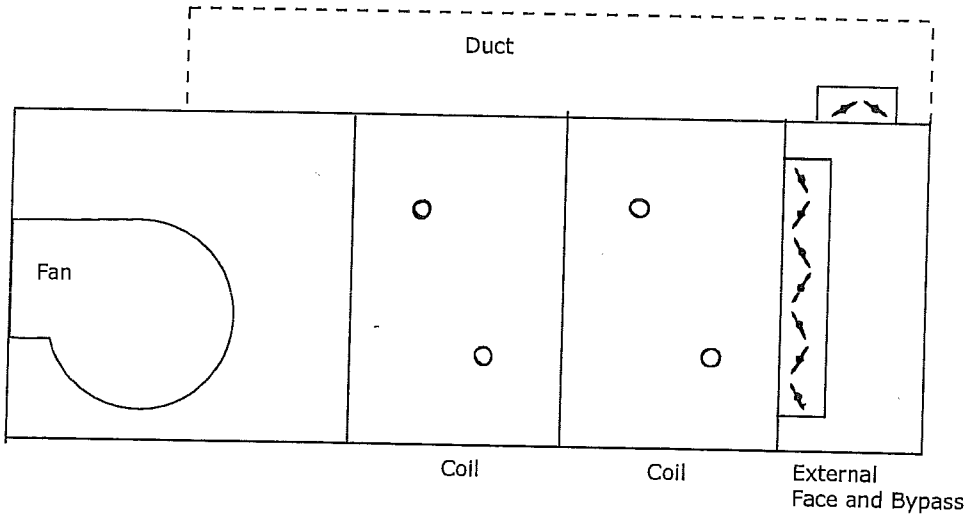

Other Connections

Access, filter, and other sections may have open inlets with a 2-inch (sizes 3-120) panel frame for connecting the ductwork. If the duct is lined, it is important the insulation does not obstruct the opening of the section.

Figure 69. Typical duct flat/flange end of unit connection - uninsulated

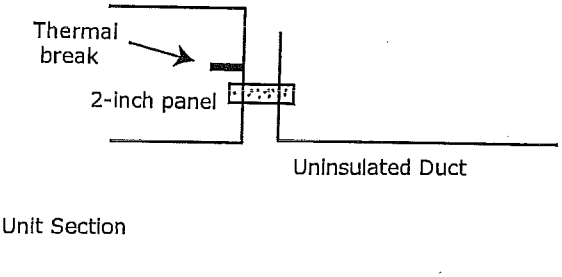

Figure 70. Typical duct flat/flange end of unit connection - insulated

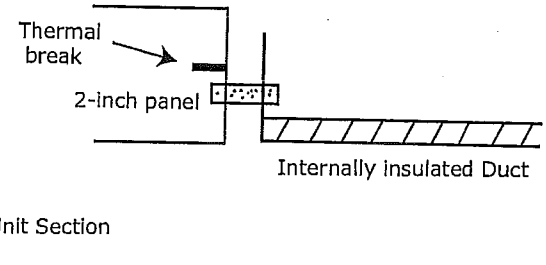

Coil Piping and Connections

General Recommendations

Proper installation, piping, and trapping is necessary to ensure satisfactory coil operation and to prevent operational damage:

- Support all piping independently of the coils.
- Provide swing joints or flexible fittings on all connections that are adjacent to heating coils to absorb thermal expansion and contraction strains.
- If the coil was ordered with factory-mounted controls, install the control valves. The valves ship separately.

Note: *The contractor is responsible for supplying the installation hardware.*

- For best results, use a short pipe nipple on the coil headers prior to making any welded flange or welded elbow type connections.
- Extended drain and vent connections are provided as standard on D1 and D2 coils only. If extended drains and vents are required on other water coils, they must be field-installed or ordered as specials from the factory.
- Pipe coils counterflow to airflow.

NOTICE:
Connection Leaks!

Use a backup wrench when attaching piping to coils with copper headers to prevent damage to the coil header. Do not use brass connectors because they distort easily and could cause connection leaks.

- When attaching the piping to the coil header, make the connection only tight enough to prevent leaks. Maximum recommended torque is 200 foot-pounds.

NOTICE:
Over Tightening!

Do not use teflon-based products for any field connections because their high lubricity could allow connections to be over-tightened, resulting in damage to the coil header.

- Use pipe sealer on all thread connections.

NOTICE:
Leakage!

Properly seal all penetrations in unit casing. Failure to seal penetrations from inner panel to outer panel could result in unconditioned air entering the unit, and water infiltrating the insulation, resulting in equipment damage.

- After completing the piping connections, seal around pipe from inner panel to outer panel.

Drain Pan Trapping

⚠ WARNING

No Step Surface!

Do not walk on the sheet metal drain pan. Walking on the drain pan could cause the supporting metal to collapse. Failure of the drain pan could result in death or serious injury.

Threaded condensate drain connections are provided on only one side of the coil section. Pitch the connection lines horizontal or downward toward an open drain. Trane recommends installing a plug to facilitate cleaning of the trap. The drain connection sizes are:

Unit size	NPT (national pipe thread) external connection
3-30	1-inch
35-57	1 1/4 inch
66-120	1 1/2 inch

Figure 71 illustrates the proper trapping, piping, and operation of the trap. Use the formula under the figure to determine the correct minimum depth for the condensate trap. If a section has a drain pan for cleaning purposes only, it does not need a trap; however, a cap or shutoff valve should be installed on the drain connection. Only sections handling condensate, such as a cooling coil section or moisture eliminator section, require a trap.

NOTICE:

Water Damage!

When more than one section has a drain pain, trap each section individually. Connecting all drains to a common line with only one trap could result in condensate retention and possible water damage to the air handler or adjoining space.

Figure 71. Drain pan trapping for negative and positive pressure applications

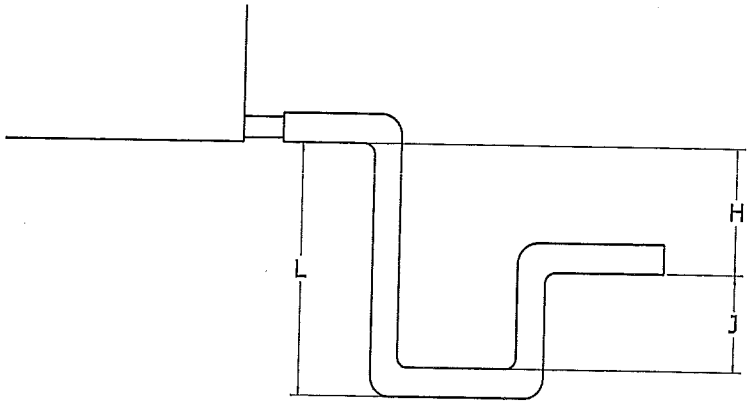

Drain pan trapping for section under negative pressure

L = H + J + pipe diameter where:
H = 1 inch for each inch of negative pressure plus 1 inch
J = 1/2 H

Drain pan trapping for section under positive pressure

L = H + J + pipe diameter where:
H = 1/2 inch (minimum)
J = 1/2 inch plus the unit positive static pressure at coil discharge (loaded filters)

Steam Coil Piping

Air handlers fitted with steam coils have labeled holes for piping penetrations. Figure 72 illustrates a typical steam coil piping configuration. See Table 24 for the codes of system components in these figures.

The coil condensate return line must be piped full size of the condensate trap connection, except for a short nipple screwed directly into the coil header's condensate return tapping. Do not bush or reduce the coil return trapping size.

Table 24. Code of system components for piping figures

Code	System component
FT	Float and thermostatic steam trap
GV	Gate valve
OV	Automatic two-position (ON-OFF) control valve
VB	Vacuum breaker
ST	Strainer
AV	Automatic or manual air vent
MV	Modulating control valve

Figure 72. Typical piping for Type NS steam coils and horizontal tubes for horizontal airflow

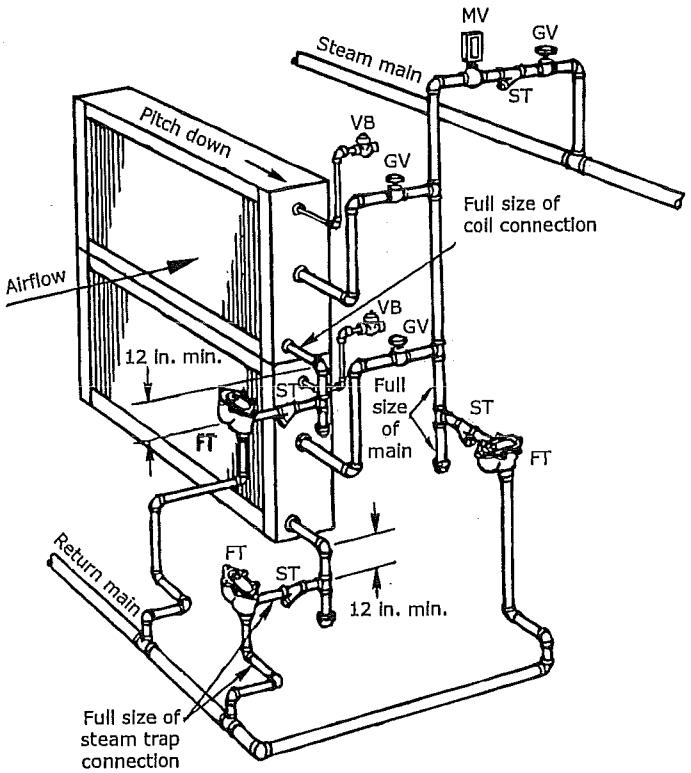

NOTICE:
Vacuum Breaker Cracking Pressure!

The 1/2-inch NPT, 15 degree swing check valve vacuum breaker is recommended because other vacuum breakers, such as spring-loaded ball-check breakers, have cracking pressures as high as 1.25 inches Hg (17 inches of water). Vacuum breakers with fitting sizes smaller than 1/2 inch NPT are too small to relieve vacuum quick enough to ensure complete condensate drainage. Other types of swing check valve vacuum breakers are acceptable if the fittings size is not smaller than 1/2-inch NPT and the cracking pressure is not larger than 0.25 inches Hg (3.4 inches of water). Failure to follow these instructions could result in equipment damage.

To prevent coil damage, complete the following recommendations:

- Install a 1/2-inch NPT, 15 degree swing check valve vacuum breaker with cracking pressure of 0.25 inches Hg (3.4 inches water) or lower at the top of the coil. This vacuum breaker should be installed as close to the coil as possible.
- For coil type NS, install the vacuum breaker in the unused condensate return tapping at the top of the coil.
- Vent the vacuum breaker line to atmosphere or connect it into the return main at the discharge side of the steam trap

Note: *Vacuum breaker relief is mandatory when the coil is controlled by a modulating steam supply or automatic two position (ON-OFF) steam supply valve. Vacuum breaker relief is also recommended when face-and-bypass control is used.*

NOTICE:
Coil Condensate!

Condensate must flow freely from the coil at all times to prevent coil damage from water hammer, unequal thermal stresses, freeze-up and/or corrosion. In all steam coil installations, the condensate return connections must be at the low point of the coil. Failure to follow these instructions could result in equipment damage.

Proper steam trap installation is necessary for satisfactory coil performance and service life. For steam trap installation:

1. Install the steam trap discharge 12 inches below the condensate return connection. Twelve inches provides sufficient hydrostatic head pressure to overcome trap losses and ensures complete condensate removal.
   a. Use float and thermostatic traps with atmospheric pressure gravity condensate return, with automatic controls, or where the possibility of low-pressure supply steam exists. (Float and thermostatic traps are recommended because of gravity drain and continuous discharge operation.)
   b. Use bucket traps only when the supply steam is not modulated and is 25 psig or higher.

Note: *Trane steam coils require a minimum of 2 psi of pressure to assure even heat distribution.*

2. Trap each coil separately to prevent holding up condensate in one or more of the coils.
3. Install strainers as close as possible to the inlet side of the trap.
4. If installing coils in series airflow, control each coil bank independently with an automatic steam-control valve. Size the traps for each coil using the capacity of the first coil in direction of airflow.
5. Use a modulating valve that has linear flow characteristics to obtain gradual modulation of the coil steam supply.

Note: *Do not modulate systems with overhead or pressurized returns unless the condensate is drained by gravity into a receiver, vented to atmosphere, and returned to the condensate pump.*

6. Pitch all supply and return steam piping down 1 inch for every 10 feet in the direction of the steam or condensate flow.

Note: *Do not drain the steam mains or take-offs through the coils. Drain the mains ahead of the coils through a steam trap to the return line.*

7. Ensure overhead returns have 1 psig of pressure at the steam trap discharge for every 2 feet of elevation for continuous condensate removal.

Water Coil Piping

Figure 73, and Figure 74 illustrate typical water coil piping configurations.

Type 5A, 5W, D1, W, UW, TT, P2, P4, and P8 water coils are self-venting only if the water velocity exceeds 1.5 feet per second (fps) in the coil tubes. Type D2, UA, UU, and WD water coils are self-venting only if the water velocity exceeds 2.5 fps in the coil tubes. See the unit submittals for coil water velocity. If the water velocity is below these minimums, vent the coil by one of the following methods:

1. Install an air vent in the top pipe plug tapping of the return header.
2. When the return line rises above the top of the coil, vent from the top of the return header horizontally to the return piping.

Note: *TT coils are designed with larger than normal end tube sheet holes to allow for maximum expansion. Air leakage around tubes should be expected and handled by capping over coil ends or by sealing around tubes with a pliable sealant such as silicone.*

Figure 73. Typical piping for type 5W one-row water coil

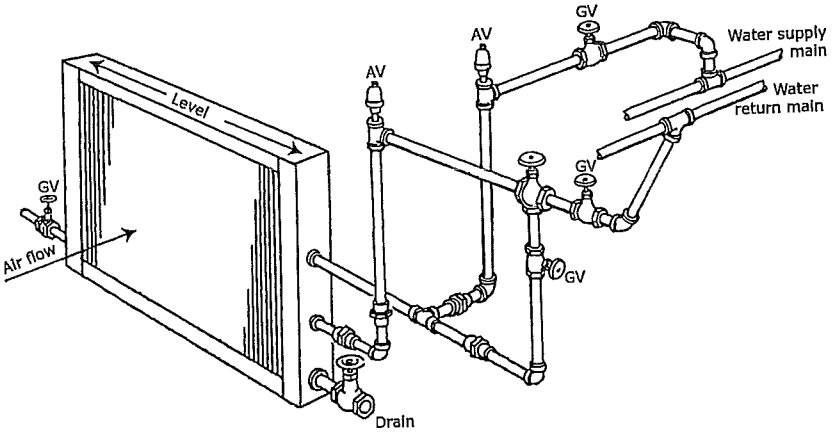

Figure 74. Typical piping for type 5A, 5W two-row, W 3- to 12-row, WD, D1, and D2 water coils

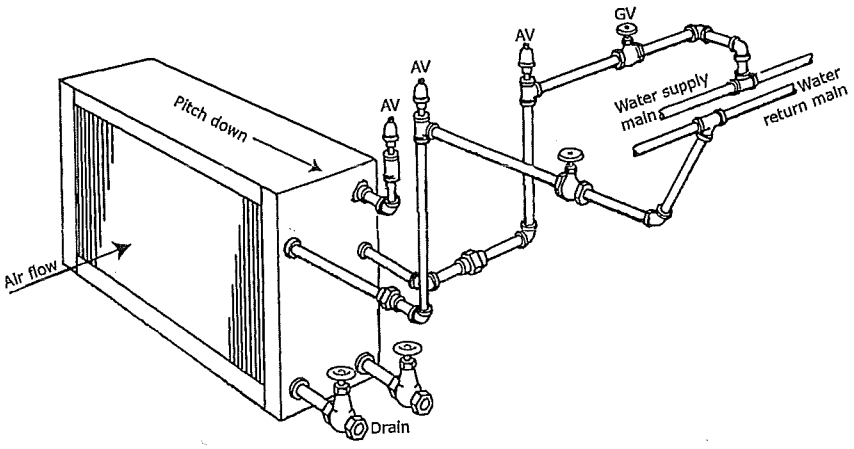

Figure 75. Typical piping for stacked water coils

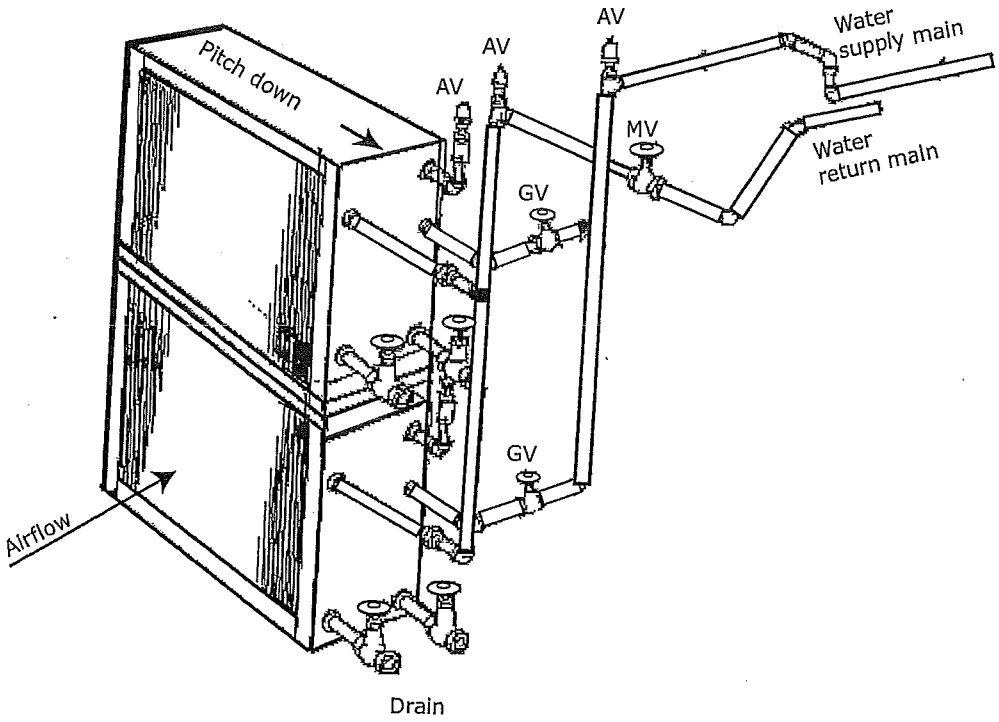

Refrigerant Coil Piping

Note: *Refer to for information on handling refrigerants.*

Use Figure 76 to determine the proper, relative sequence of the components in the refrigerant lines that connect the condensing unit to an evaporator coil. Refer to "Examples of Field-Installed Evaporator Piping" on page 89 for more detailed schematics of evaporator piping.

Figure 76. Example of placement for split-system components

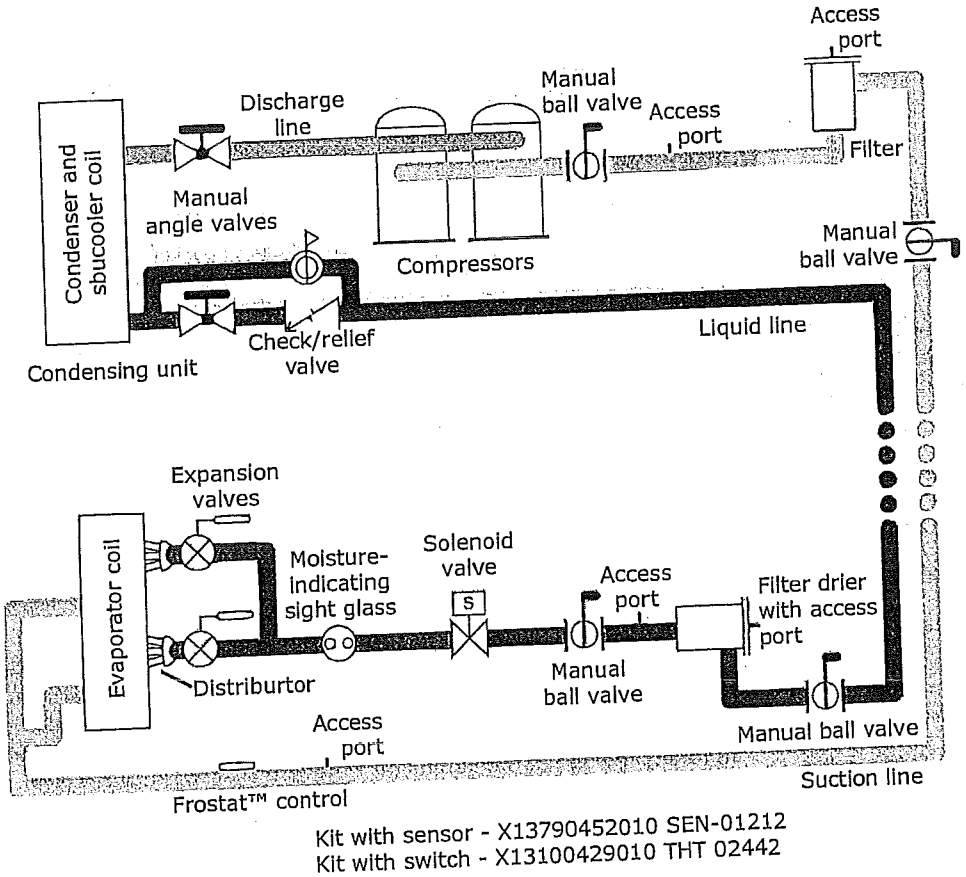

Liquid Lines

Line Sizing

Properly sizing the liquid line is critical to a successful split-system application. The selected tube diameter must provide at least 5°F [2.7°C] of subcooling at the expansion valve throughout the operating envelope. Increasing the size of the liquid line will not increase the available subcooling.

Routing. Install the liquid line with a slight slope in the direction of flow so that it can be routed with the suction line. Minimize tube bends and reducers because these items tend to increase pressure drop and to reduce subcooling at the expansion valve. Liquid line receivers, other than those that are factory-installed, are not recommended.

Insulation

The liquid line is generally warmer than the surrounding air, so it does not require insulation. In fact, heat loss from the liquid line improves system capacity because it provides additional subcooling.

Components

Liquid-line refrigerant components necessary for a successful job include a filter drier, access port, solenoid valve, moisture-indicating sight glass, expansion valve(s), and ball shutoff valves. Figure 76 illustrates the proper sequence for positioning them in the liquid line. Position the components as close to the evaporator as possible.

- *Filter drier.* There is no substitute for cleanliness during system installation. The filter drier prevents residual contaminants, introduced during installation, from entering the expansion valve and solenoid valve.
- *Access port.* The access port allows the unit to be charged with liquid refrigerant and is used to determine subcooling. This port is usually a Schraeder® valve with a core.
- *Solenoid valve.* In split systems, solenoid valves isolate the refrigerant from the evaporator during off cycles; under certain conditions, they may also trim the amount of active evaporator as compressors unload. Generally, the "trim" solenoid valve is unnecessary for variable-air-volume comfort-cooling applications, and is only required for constant-volume applications when dehumidification is a concern.
- *Moisture-indicating sight glass.* Be sure to install one moisture-indicating sight glass in the main liquid line. The only value of the sight glass is its moisture indication ability. Use actual measurements of temperature and pressure—not the sight glass—to determine subcooling and whether the system is properly charged. The moisture indicator/sight glass must be sized to match the size of the liquid line at the thermal expansion valve.

- *Thermal expansion valve.* The expansion valve is the throttling device that meters the refrigerant into the evaporator coil. Metering too much refrigerant floods the compressor; metering too little elevates the compressor temperature. Choosing the correct size and type of expansion valve is critical to assure it will correctly meter refrigerant into the evaporator coil throughout the entire operating envelope of the system. *Correct refrigerant distribution into the coil requires an expansion valve for each distributor.*

NOTICE:
Valve Damage!

Disassemble the thermal expansion valve before completing the brazing connections. If necessary, wrap the valve in a cool, wet cloth while brazing. Failure to protect the valve from high temperatures could result in damage to internal components.

Figure 77. Type F refrigerant coil with packed elbow

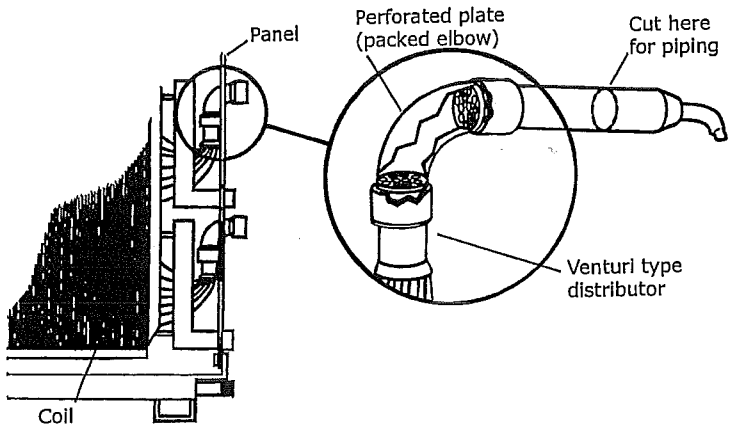

The thermal expansion valve must be selected for proper size and capacity. The size of the expansion valve should cover the full range of loadings. Check that the valve will successfully operate at the lightest load condition. For improved modulation, choose expansion valves with balanced port construction and external equalization.

Cut the process tube and cap assembly from the liquid connection as shown in Figure 77 and install the expansion valve directly to the liquid connections.

Suction Lines

Line sizing

Proper suction-line sizing is required to guarantee the oil returns to the compressor throughout the system's operating envelope. At the same time, the line must be sized so that the pressure drop does not excessively affect capacity or efficiency. To accomplish both objectives, it may be necessary to use two different line diameters: one for the horizontal run and for vertical drops, and another for the vertical lifts.

Routing

To prevent residual or condensed refrigerant from "free-flowing" toward the compressor, install the suction line so it slopes slightly—that is, by ¼ inch to 1 inch per 10 feet of run—toward the evaporator. When the application includes a suction riser, oil must be forced to travel the height of the riser. Riser traps and double risers are unnecessary in the suction line when the refrigerant coil is used with Trane condensing units.

Avoid putting refrigerant lines underground. Refrigerant condensation or installation debris inside the line, service access, and abrasion/corrosion can quickly impair reliability.

Insulation

Any heat that transfers from the surrounding air to the cooler suction lines increases the load on the condenser (reducing the system's air-conditioning capacity) and promotes condensate

formation (adversely affecting indoor air quality). After operating the system and testing all fittings and joints to verify the system is leak-free, insulate the suction lines all the way to inner side panel to prevent heat gain and unwanted condensation.

Components

Installing the suction line requires field installation of these components: a filter, access port, and a Frostat™ control when the refrigerant coil is used with Trane condensing units. Position them as close to the compressor as possible.

Note: *Placement of the Frostat control is illustrated in Figure 76 on page 85.*

- *Filter.* The suction filter prevents contaminants, introduced during installation, from entering the compressor. For this reason, the suction filter should be the replaceable-core type, *and* a clean core should be installed after the system is cleaned up.
- *Access port.* The access port is used to determine suction pressure. This port is usually a Schraeder valve with a core.
- *Frostat™ coil frost protection.* The Frostat control is the preferred method for protecting evaporator coils from freezing when the refrigerant coil is used with Trane condensing units. It senses the suction-line temperature and temporarily disables mechanical cooling if it detects frost conditions. The control is mechanically attached to the outside of the refrigerant line, near the evaporator, and wired to the unit control panel.
- *Ball shutoff valve.* Adding manual, ball-type shutoff valves upstream and downstream of the filter simplifies replacement of the filter core.

Examples of Field-Installed Evaporator Piping

Single-Circuit Condensing Unit: Evaporator Coil with One Distributor

Figure 78. Single-circuit evaporator coil with one distributor

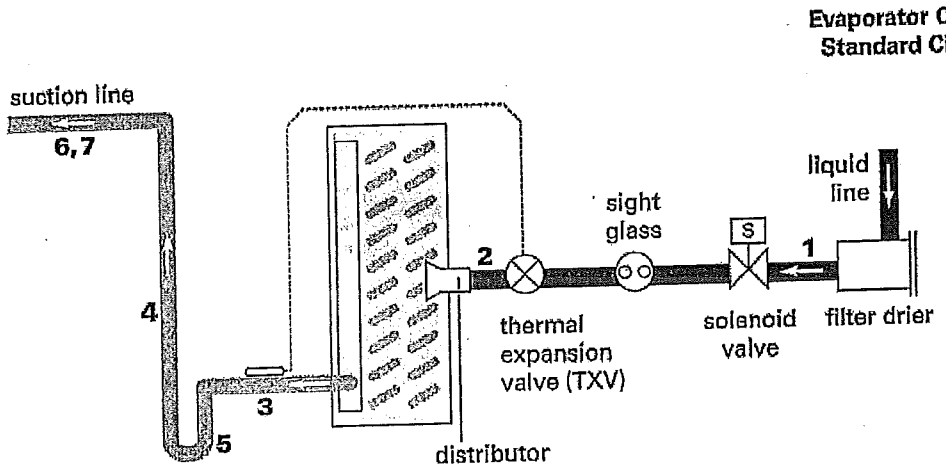

1. Pitch the liquid line slightly—1 inch/10 feet —so that the refrigerant drains toward the evaporator.
2. Provide one expansion valve per distributor.
3. Slightly pitch the outlet line from the suction header toward the suction riser—that is, 1 inch/10 feet in the direction of flow. Use the tube diameter that matches the suction-header connection.
4. For the vertical riser, use the tube diameter recommended by the condensing unit manufacturer. Assure the top of the riser is higher than the evaporator coil.
5. Arrange the suction line so the refrigerant gas leaving the coil flows downward, past the lowest suction-header outlet, before turning upward.
6. Pitch the suction line slightly—1 inch/10 feet —so the refrigerant drains toward the evaporator.
7. Insulate the suction line.

Single-Circuit Condensing Unit: Evaporator Coil with Two Distributors

Figure 79. Single-circuit evaporator coil with two distributors

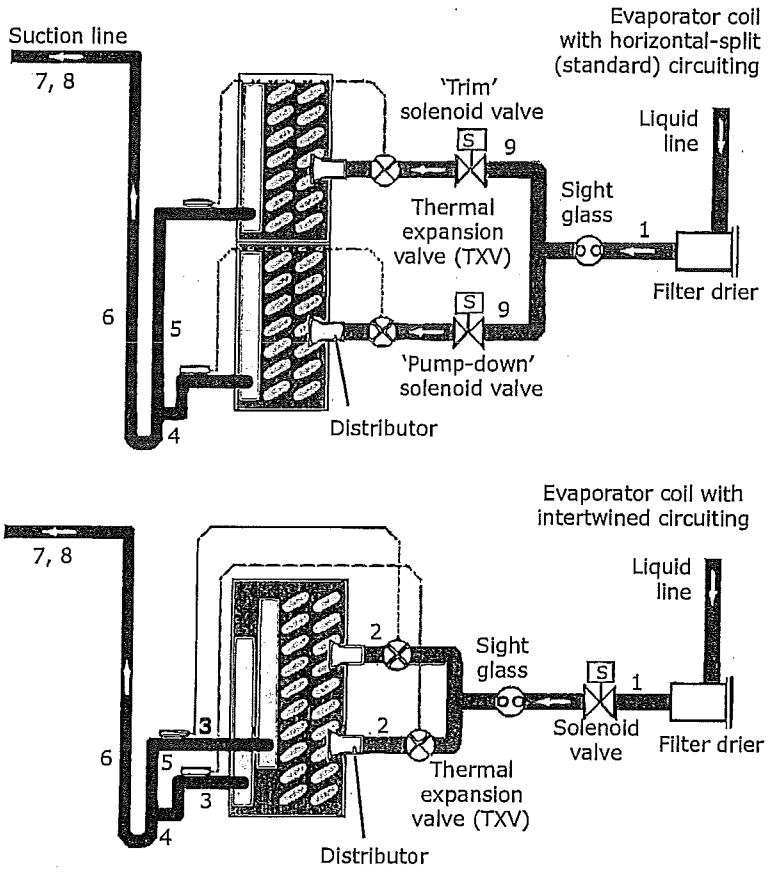

1. Pitch the liquid line slightly—1 inch/10 feet —so the refrigerant drains toward the evaporator.
2. Provide one expansion valve per distributor.
3. Slightly pitch the outlet line from the suction header toward the suction riser—that is, 1 inch/10 feet in the direction of flow. Use the tube diameter that matches the suction-header connection.
4. Arrange the suction line so the refrigerant gas leaving the coil flows downward, past the lowest suction-header outlet, before turning upward. Use a double-elbow configuration to isolate the thermal expansion valve bulb from other suction headers.
5. For horizontal tubing, use the tube diameter recommended by the condensing unit manufacturer.
6. For the vertical riser, use the tube diameter recommended by the condensing unit manufacturer. Assure the top of the riser is higher than the evaporator coil.
7. Pitch the suction line slightly—1 inch/10 feet —so the refrigerant drains toward the evaporator.
8. Insulate the suction line.
9. Only use a "trim" solenoid valve for constant-volume, humidity-sensitive applications. For all other applications, install a single solenoid valve (the "pumpdown" solenoid valve) between the liquid-line filter drier and the sight glass.

Single-Circuit Condensing Unit: Evaporator Coil with Four Distributors

Figure 80. Single-circuit evaporator coil with four distributors

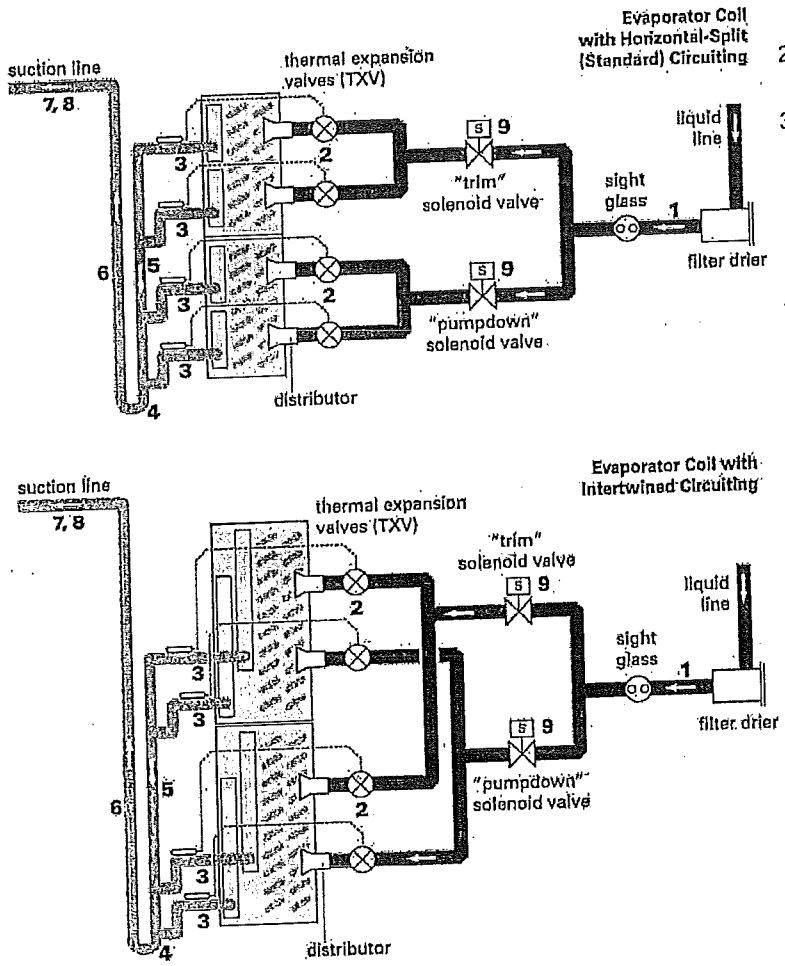

1. Pitch the liquid line slightly—1 inch/10 feet —so the refrigerant drains toward the evaporator.
2. Provide one expansion valve per distributor.
3. Slightly pitch the outlet line from the suction header toward the suction riser—that is, 1 inch/10 feet in the direction of flow. Use the tube diameter that matches the suction-header connection.
4. Arrange the suction line so the refrigerant gas leaving the coil flows downward, past the lowest suction-header outlet, before turning upward. Use a double-elbow configuration to isolate the thermal expansion valve bulb from other suction headers.
5. For horizontal tubing, use the tube diameter recommended by the condensing unit manufacturer.
6. For the vertical riser, use the tube diameter recommended by the condensing unit manufacturer. Assure the top of the riser is higher than the evaporator coil.
7. Pitch the suction line slightly—1 inch/10 feet —so the refrigerant drains toward the evaporator.
8. Insulate the suction line.
9. Only use a "trim" solenoid valve for constant-volume, humidity-sensitive applications. For all other applications, install a single solenoid valve (the "pumpdown" solenoid valve) between the liquid-line filter drier and the sight glass.

Dual-Circuit Condensing Unit: Evaporator Coil with Two Distributors)

Figure 81. Dual-circuit evaporator coil with two distributors

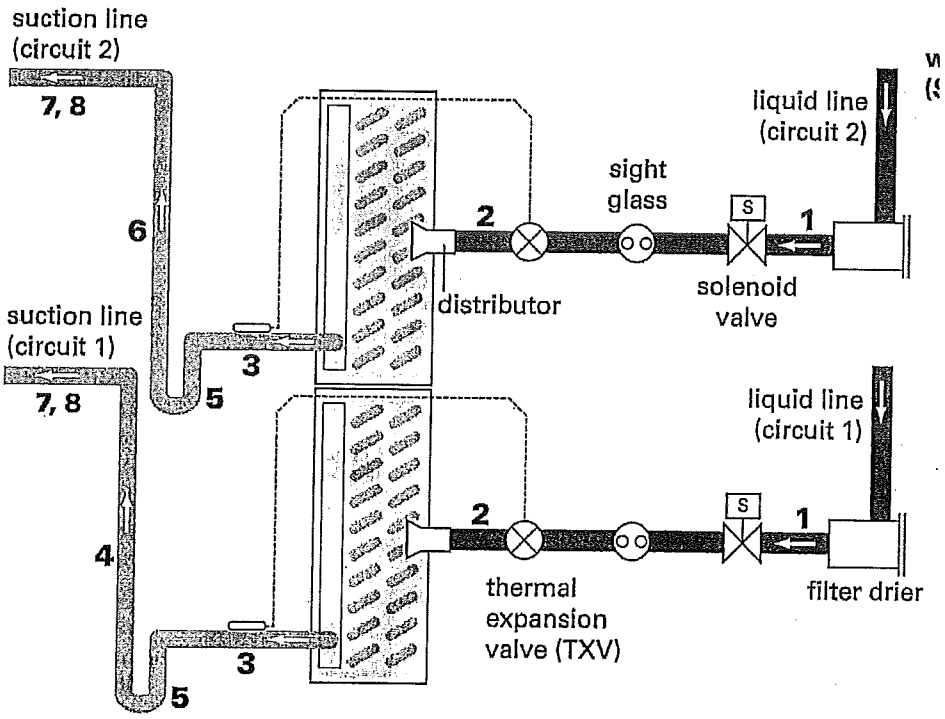

1. Pitch the liquid lines slightly—1 inch/10 feet —so the refrigerant drains toward the evaporator.
2. Provide one expansion valve per distributor.
3. Slightly pitch the outlet line from the suction header toward the suction riser—that is, 1 inch/10 feet in the direction of flow. Use the tube diameter that matches the suction-header connection.
4. The top of the Circuit 1 suction riser must be higher than the bottom evaporator coil. Use the tube diameter recommended by the condensing unit manufacturer for the riser.
5. Arrange the suction line so the refrigerant gas leaving the coil flows downward, past the lowest suction-header outlet, before turning upward.
6. The top of the Circuit 2 suction riser must be higher than the top evaporator coil. Use the tube diameter recommended by the condensing unit manufacturer for the riser.
7. Pitch the suction lines slightly—1 inch/10 feet —so the refrigerant drains toward the evaporator.
8. Insulate the suction lines.

Dual-Circuit Condensing Unit: Evaporator Coil with Four Distributors

Figure 82. Dual-circuit evaporator coil with four distributors

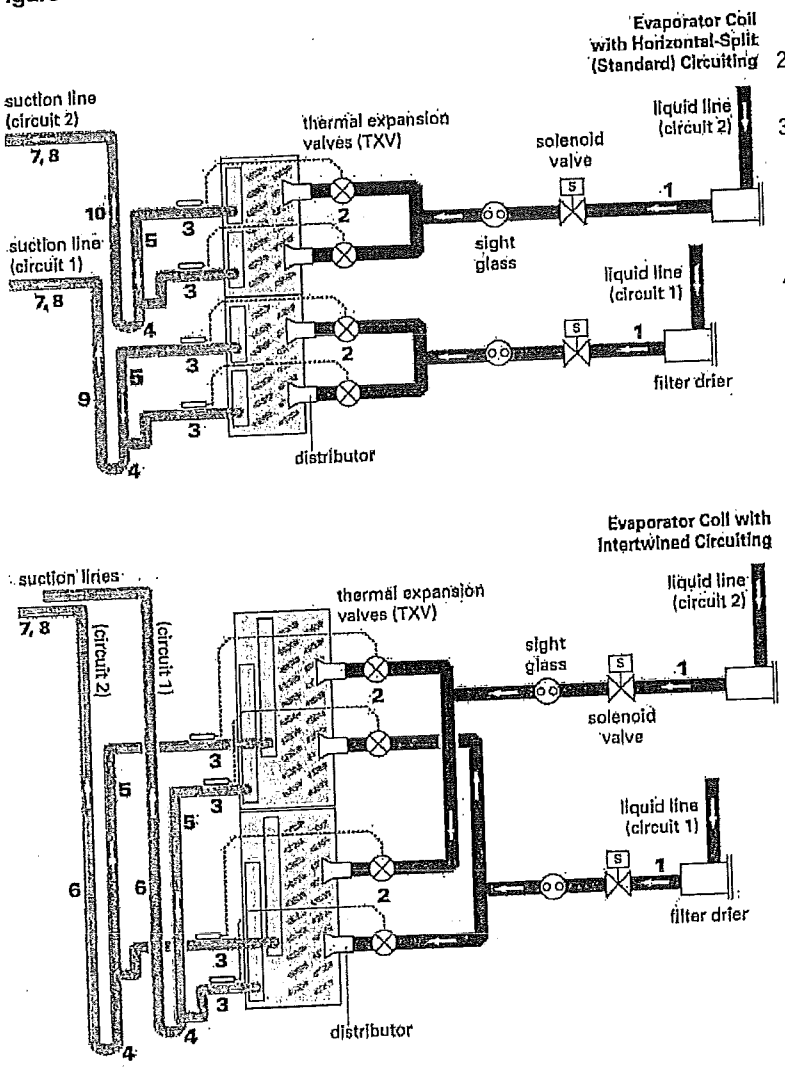

1. Pitch the liquid line slightly—1 inch/10 feet —so the refrigerant drains toward the evaporator.
2. Provide one expansion valve per distributor.
3. Slightly pitch the outlet line from the suction header toward the suction riser—that is, 1 inch/10 feet in the direction of flow. Use the tube diameter that matches the suction-header connection.
4. Arrange the suction line so the refrigerant gas leaving the coil flows downward, past the lowest suction-header outlet, before turning upward. Use a double-elbow configuration to isolate the thermal expansion valve bulb from other suction headers.
5. For horizontal tubing, use the tube diameter recommended by the condensing unit manufacturer.
6. For the vertical riser, use the tube diameter recommended by the condensing unit manufacturer. Assure the top of the riser is higher than the evaporator coil.
7. Pitch the suction line slightly—1 inch/ 10 feet —so the refrigerant drains toward the evaporator.
8. Insulate the suction line.
9. The top of the Circuit 1 suction riser must be higher than the bottom evaporator coil. Use the tube diameter recommended by the condensing unit manufacturer for the riser.
10. The top of the Circuit 2 suction riser must be higher than the top evaporator coil. Use the tube diameter recommended by the condensing unit manufacturer for the riser.

Dual-Circuit Condensing Unit: Evaporator Coil with Eight Distributors

Figure 83. Dual-circuit evaporator coil with eight distributors

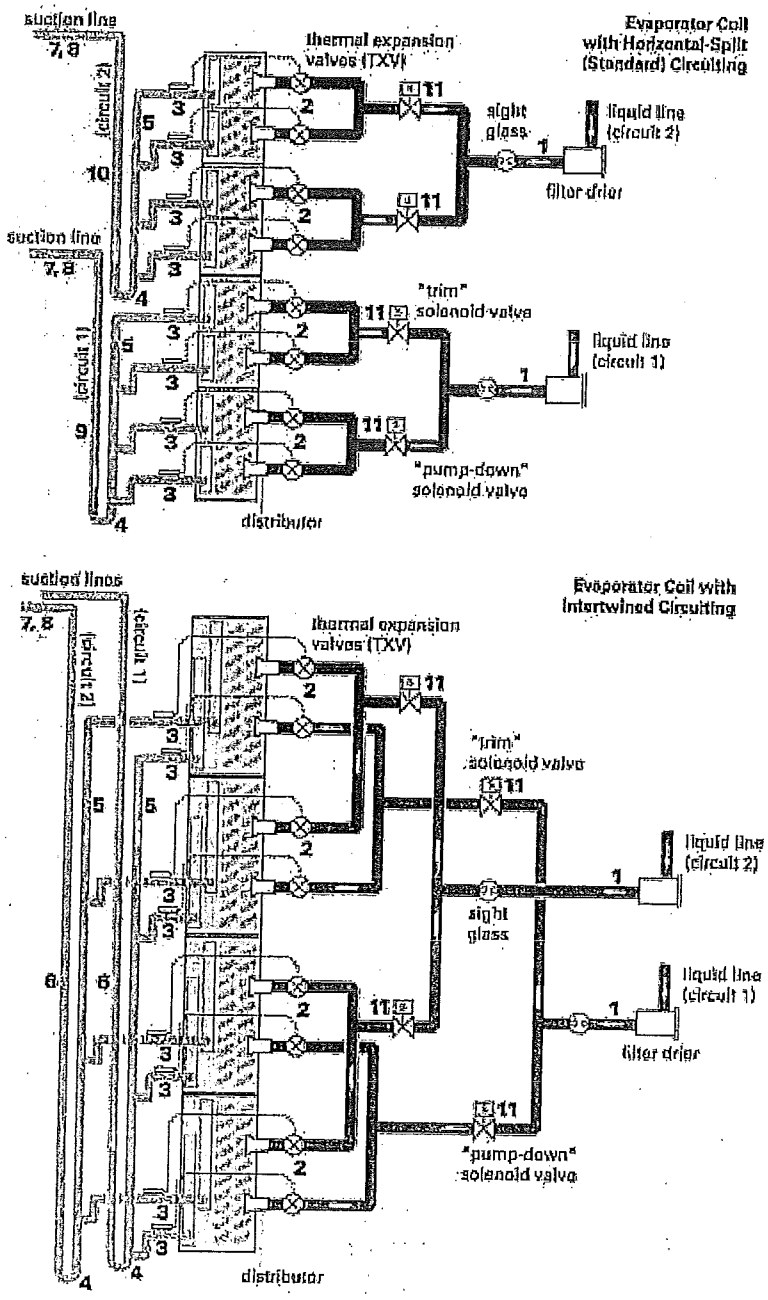

1. Pitch the liquid line slightly—1 inch/10 feet —so the refrigerant drains toward the evaporator.
2. Provide one expansion valve per distributor.
3. Slightly pitch the outlet line from the suction header toward the suction riser—that is, 1 inch/10 feet in the direction of flow. Use the tube diameter that matches the suction-header connection.
4. Arrange the suction line so the refrigerant gas leaving the coil flows downward, past the lowest suction-header outlet, before turning upward. Use a double-elbow configuration to isolate the TXV bulb from other suction headers.
5. For horizontal tubing, use the tube diameter recommended by the condensing unit manufacturer.
6. For the vertical riser, use the tube diameter recommended by the condensing unit manufacturer. Assure the top of the riser is higher than the evaporator coil.
7. Pitch the suction line slightly—1 inch/ 10 feet —so the refrigerant drains toward the evaporator.
8. Insulate the suction line.
9. The top of the Circuit 1 suction riser must be higher than the bottom evaporator coil. Use the tube diameter recommended by the condensing unit manufacturer for the riser.
10. The top of the Circuit 2 suction riser must be higher than the top evaporator coil. Use the tube diameter recommended by the condensing unit manufacturer for the riser.
11. Only use a "trim" solenoid valve for constant-volume, humidity-sensitive applications. For all other applications, install a single solenoid valve (the "pumpdown" solenoid valve) between the liquid-line filter drier and the sight glass.

Installation - Electrical

⚠ WARNING
Hazardous Voltage w/ Capacitors!

Disconnect all electric power, including remote disconnects before servicing. Follow proper lockout/tagout procedures to ensure the equipment cannot be inadvertently energized. For variable frequency drives or other energy storing components provided by Trane or others, refer to the appropriate manufacturer's literature for allowable waiting periods for discharge of capacitors. Verify with an appropriate voltmeter that all capacitors have discharged. Failure to disconnect power and discharge capacitors before servicing could result in death or serious injury.

Note: *For additional information regarding the safe discharge of capacitors, see PROD-SVB06A-EN or PROD-SVB06A-FR*

⚠ WARNING
Proper Field Wiring and Grounding Required!

All field wiring MUST be performed by qualified personnel. Improperly installed and grounded field wiring poses FIRE and ELECTROCUTION hazards. To avoid these hazards, you MUST follow requirements for field wiring installation and grounding as described in NEC and your local/ state electrical codes. Failure to follow codes could result in death or serious injury.

Use Copper Conductors Only!

Unit terminals are not designed to accept other types of conductors. Use of aluminum or other type of wiring may result in galvanic corrosion or overheating. Failure to use copper conductors could result in equipment damage.

If the unit does not include a factory-mounted starter, wiring to the unit fan motor must be provided by the installer and must comply with all national and local electrical codes. The installer must also furnish a service disconnect switch in compliance with national and local electrical codes.

Fan motors require motor overload protective devices that are rated or selected in compliance with the National Electric Code (NEC) or Canadian Electric Code. Specific unit and motor connection diagrams are provided on the starter/VFD if Trane-provided, or refer to the motor nameplate.

If wiring directly to the motor, a flexible connection at the motor to permit fan belt adjustment should be provided. Fractional horsepower motors may be factory connected to a terminal box on the unit. If this construction is provided, the installer should complete field wiring to this connection box. For a typical high voltage wiring schematic, see Figure 84.

Figure 84. Typical VFD wiring schematic

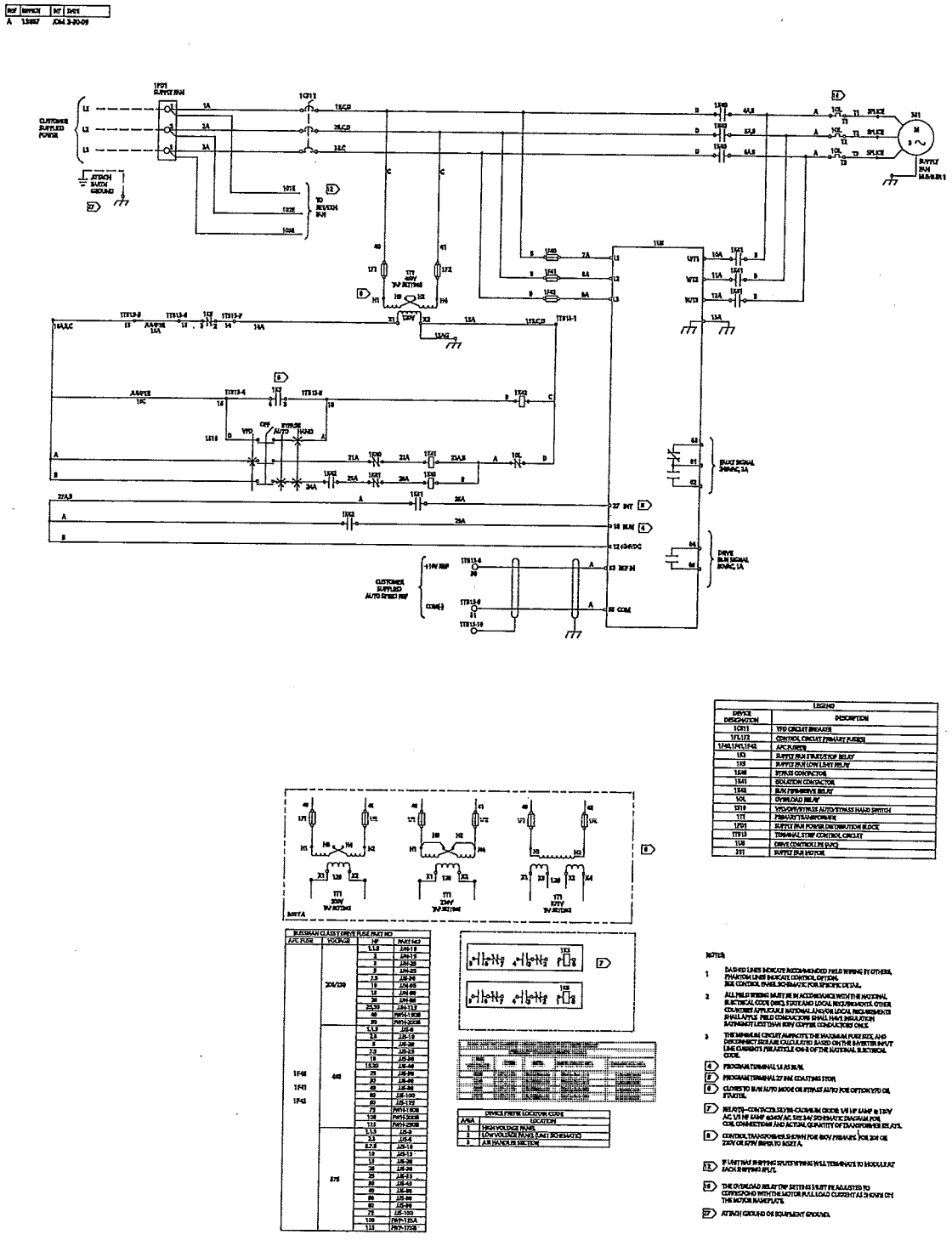

Figure 85. Typical starter wiring schematic

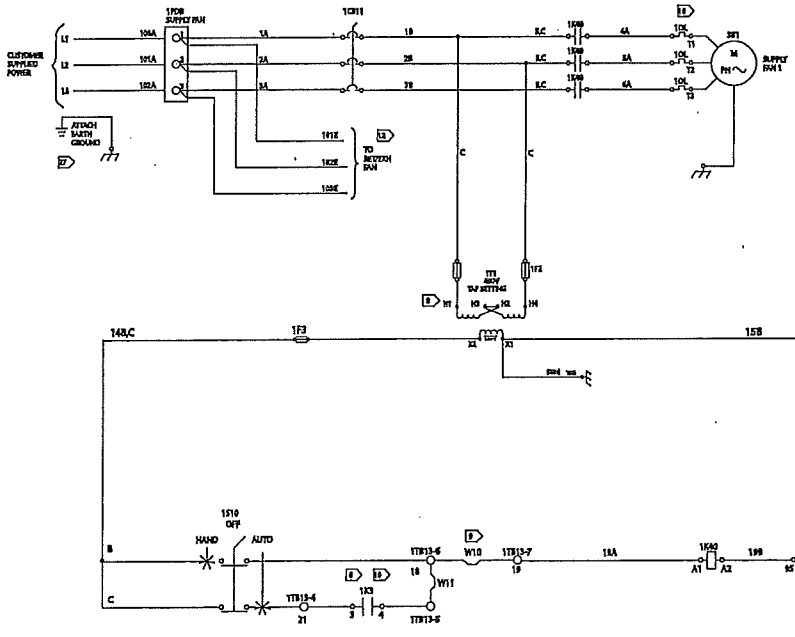

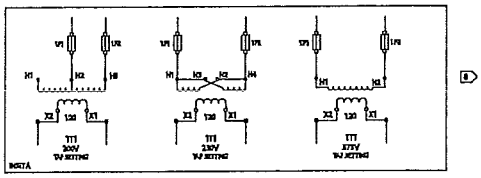

LEGEND	
DEVICE DESIGNATION	DESCRIPTION
1CB11	STARTER CIRCUIT BREAKER
1F1,1F2	CONTROL CIRCUIT PRIMARY FUSES
1F3	CONTROL CIRCUIT SECONDARY FUSE
1K3	SUPPLY FAN START/STOP RELAY (FIELD SUPPLY)
1K40	SUPPLY FAN STARTER
1OL	OVERLOAD RELAY
1S10	HAND/OFF/AUTO SWITCH
1T1	PRIMARY TRANSFORMER
1PDB	SUPPLY FAN POWER DISTRIBUTION BLOCK
1TB13	TERMINAL STRIP CONTROL CIRCUIT
1M1	SUPPLY FAN MOTOR 1

FUSE RATING (AMPS) - 600V CLASS RK5 TIME DELAY			
PRIMARY TRANSFORMER FUSES			
LINE VOLTAGE	ITEM	MANUFACTURER	MFR. PART NO.
200	1F1,1F2	FERRAZ-SHAWMUT	ATDR-1
230	1F1,1F2	FERRAZ-SHAWMUT	ATDR-8/10
460	1F1,1F2	FERRAZ-SHAWMUT	ATDR-4/10
575	1F1,1F2	FERRAZ-SHAWMUT	ATDR-8/10
SECONDARY CIRCUIT FUSES			
LINE VOLTAGE	ITEM	MANUFACTURER	MFR. PART NO.
150	1F3	FERRAZ-SHAWMUT	ATDR-8/10

DEVICE/PANEL LOCATION CODE	
AREA	LOCATION
1	HIGH VOLTAGE PANEL
2	LOW VOLTAGE PANEL (UNIT SCHEMATIC)
3	AIR HANDLER SECTION

AUXILIARY CONTACT
1K40 AUX.

NOTES:

1. DASHED LINES INDICATE RECOMMENDED FIELD WIRING BY OTHERS. PHANTOM LINES INDICATE CONTROL OPTION. SEE CONTROL PANEL SCHEMATIC FOR SPECIFIC DETAIL.
2. ALL FIELD WIRING MUST BE IN ACCORDANCE WITH THE NATIONAL ELECTRICAL CODE (NEC), STATE AND LOCAL REQUIREMENTS. OTHER COUNTRIES APPLICABLE NATIONAL AND/OR LOCAL REQUIREMENTS SHALL APPLY. FIELD CONDUCTORS SHALL HAVE INSULATION RATING NOT LESS THAN 90°C COPPER CONDUCTORS ONLY.
3. THE MINIMUM CIRCUIT AMPACITY, THE MAXIMUM FUSE SIZE, AND DISCONNECT SIZE ARE CALCULATED BASED ON THE NAMEPLATE INPUT LINE CURRENTS PER ARTICLE 430-3 OF THE NATIONAL ELECTRICAL CODE.
4. CLOSES TO RUN AUTO MODE OR BYPASS AUTO FOR OPTION VFD OR ITS ATER.
5. CONTROL TRANSFORMER SHOWN FOR 460V PRIMARY. FOR 200 OR 230V OR 575V REFER TO INSET A.
6. REMOVE JUMPER AND INSTALL FIELD SAFETY CONTACT.
7. FIELD SUPPLIED CONTACTS.
8. IF UNIT HAS SHIPPING SPLITS WIRING WILL TERMINATE TO MODULE AT EACH SHIPPING SPLIT.
9. THE OVERLOAD RELAY TRIP SETTING MUST BE ADJUSTED TO CORRESPOND WITH THE MOTOR FULL LOAD CURRENT AS SHOWN ON THE MOTOR NAMEPLATE.
10. ATTACH GROUND OR EQUIPMENT GROUND.

Figure 86. Transformer plate

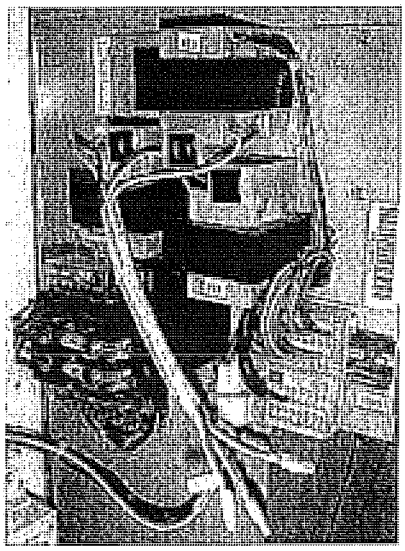

Figure 87. 120 to 24 Vac Control Transformer

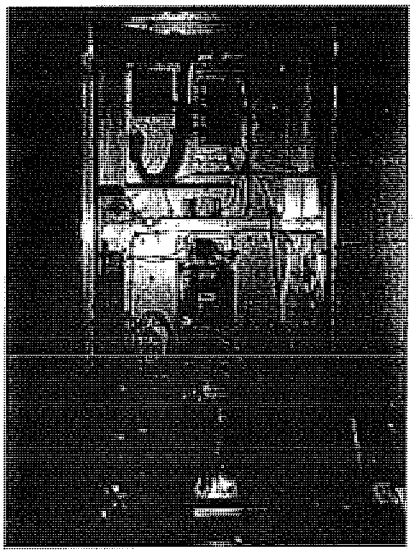

Figure 88. Variable-frequency drive (VFD)

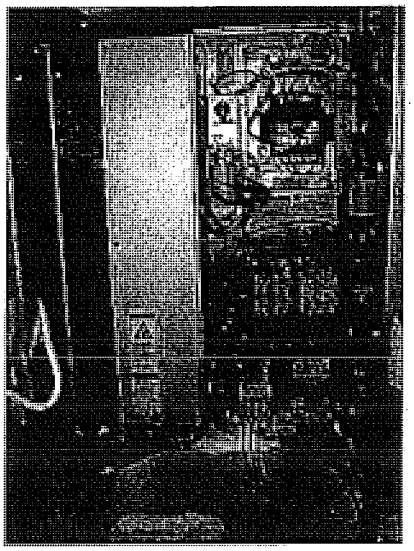

Note: *Properly seal all penetrations in unit casing. Failure to seal penetrations from inner panel to outer panel could result in unconditioned air entering the unit.*

All units with starters or variable-frequency drives (VFDs) that have direct-digital controllers (DDCs) are provided with line voltage to 24 Vac power transformers (see Figure 86). All units with factory-mounted controllers, and no starters or VFDs, are provided with 120 Vac to 24 Vac control transformers (see Figure 87). Figure 88 shows a typical VFD power box.

Note: *The valve jack is typically located at the air-leaving side of the coil connection inside the casing panel.*

To provide field-wiring to units with DDC controls:

- If VFD or starter is not factory-mounted, provide 120 Vac power to a transformer in the controller enclosure. A separate circuit is recommended (see Figure 87).
- Install outside-air sensor and space sensor, if ordered.
- For valve junction box mounting and wiring detail, see Figure 89.

Figure 89. Junction box for valve wiring

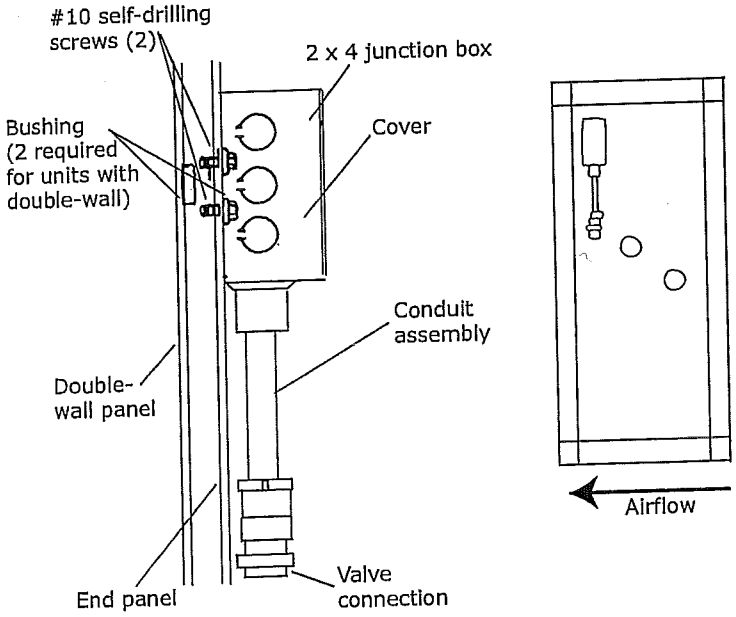

Quick Connects

The actuators, factory-mounted or field-supplied, are separately wired and controlled by a direct-digital controller or other building logic. Figure 90 illustrates the typical quick connect scheme.

Figure 90. Typical quick connects with wiring identification

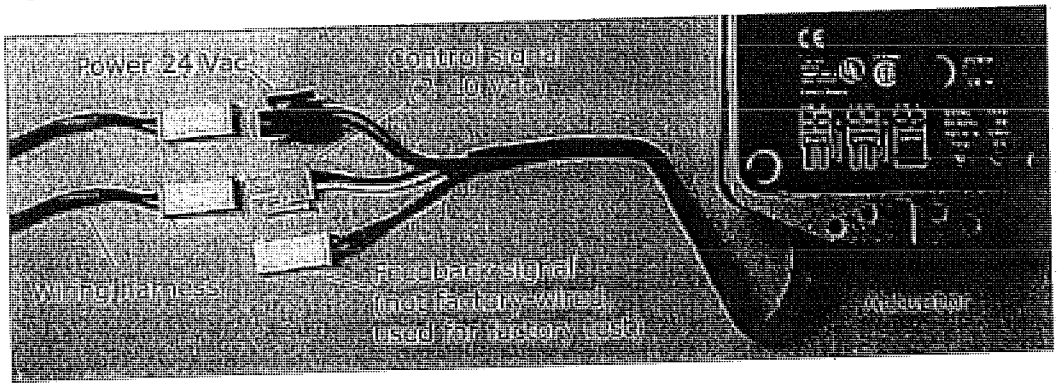

Controls Interface

The portable operator display is used for temporary connection to and operation of Tracer MP580/581 controllers. With the portable operator display, you can monitor data, change setpoints, monitor alarms, and override points. The portable operator display includes a 10 ft (3 m) cable with connector that is stored in the storage compartment of the carrying bag. The cable cannot be disconnected from the operator display. Keep this document with the portable operator display for access to calibration and cleaning instructions.

Note: *The portable operator display is not used for timeclock scheduling. To provide scheduling you must use a Tracer Summit system.*

Connecting the operator display

To connect the portable operator display:

1. Locate the factory-provided service module (see Figure 91).
2. Attach the operator-display cable to the operator-display connector on the service module. The operator display receives power from the controller and turns on automatically when it is connected.

Figure 91. Service module

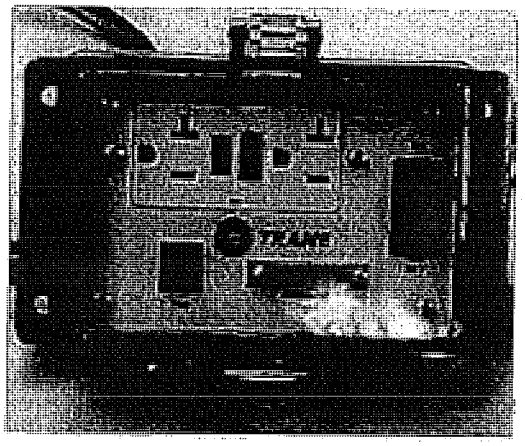

Setting up the operator display

NOTICE:

Equipment Damage!

To clean the operator display, use a cloth dampened with commercial liquid glass cleaner. Spraying water or cleansers directly on the screen could result in equipment damage.

This section shows how to calibrate the operator display touch screen and how to adjust the brightness and contrast. To set up the operator display screens and security, see the *Tracer MP580/581 Programmable Controller Programming* guide (CNT-SVP01B-EN).

Calibrating the operator display

To calibrate the operator display:

1. On the home screen, press Setup. The Setup menu appears.
2. Page down to view the next screen.
3. Press Calibrate Touch Screen. A calibration screen appears.

NOTICE:
Equipment Damage!

Do not allow the operator display to come in contact with sharp objects. This could result in equipment damage.

4. Touch the target using a small, pliable, blunt object, such as a pencil eraser or your finger. Hold until the beeping stops. A second calibration screen appears.
5. Again, touch the target with the object. Hold until the beeping stops. The Advanced Selection screen appears.
6. Press Home. The home screen appears.

Adjusting brightness and contrast

To adjust the brightness and contrast of the operator display:

1. On the home screen, press Setup. The Setup menu appears.
2. Page down to view the next screen.
3. Press the Adjust Brightness and Contrast buttons. The Brightness and Contrast screen appears.
4. To increase the brightness, press the buttons along the top row, in sequence, from left to right. To decrease the brightness, press the buttons from right to left.

Note: *Contrast adjustment is not available on all computer display models.*

5. To increase the contrast, press the buttons along the bottom row, in sequence, from left to right. To decrease the contrast, press the buttons from right to left.
6. Press Home. The home screen appears.

External communications port

Units with a factory-provided DDC controller can include a service module (see Figure 91) with an external communications port when purchased. Both the operator display and Rover service tool can be connected without shutting off the unit through the external communications port. Open the cover plate on the service module and plug into the RJ-11 port for the operator display or the RS 485 port for the Rover service tool. This enables continuous operation of the air handler without disruption to the operating conditions of the unit. When servicing of the unit is complete, close the cover plate on the service module to eliminate any air leakage path.

Start-Up

Pre-Startup Checklist

Once the air handler has been assembled and installed, attention must be directed to individual components for proper operation. Before operating the unit, complete the pre-startup checklist.

⚠ WARNING
Hazardous Voltage w/ Capacitors!

Disconnect all electric power, including remote disconnects before servicing. Follow proper lockout/tagout procedures to ensure the equipment cannot be inadvertently energized. For variable frequency drives or other energy storing components provided by Trane or others, refer to the appropriate manufacturer's literature for allowable waiting periods for discharge of capacitors. Verify with an appropriate voltmeter that all capacitors have discharged. Failure to disconnect power and discharge capacitors before servicing could result in death or serious injury.

Note: *For additional information regarding the safe discharge of capacitors, see PROD-SVB06A-EN or PROD-SVB06A-FR*

General Checks

- Ensure the unit has been installed level.
- Ensure supply-air and return-air ducts have been connected.
- Ensure damper operator motors and connecting linkage have been installed.
- Verify damper operation and linkage alignment.
- Check that air filters are in place and positioned properly.
- Remove any debris from the unit interior.
- Remove all foreign material from the drain pan and check drain pan opening and condensate line for obstructions.
- Close and secure all unit access doors.
- If differential pressure switch is provided on filter rack, adjust per system requirements.
- Inspect electrical connections to the unit and unit controllers.
  - Connections should be clean and secure.
  - Compare the actual wiring with the unit diagrams.
  - Reference the appropriate controller manual for more details about starting units with factory-mounted controls.
- Check piping and valves for leaks. Open or close the valves to check for proper operation. Drain lines should be open.
- Leave this manual with the unit.

Fan-Related Checks

- If the unit is *not* externally isolated, ensure that the fan isolator tie-down bolts have been removed. See "Fan Isolation" section on page 61 for more information.
- Rotate all fan wheels manually to confirm they turn freely in the proper direction.
- Check fan shaft bearings, fan wheel, and drive sheave set screws for proper torque settings (see Table 26 on page 108.
  - Fan sheaves should be tight and aligned.
  - Bearing set screws should be torqued. See Table 37 on page 124 for torque values.
- Check fan drive belt tension. See "Tension the Fan Belt" section on page 106.
- Inspect fan motor and bearings for proper lubrication, if necessary. See "Fan Bearing Lubrication" on page 123.

Coil-Related Checks

NOTICE:

Proper Water Treatment!

The use of untreated or improperly treated water in coils could result in scaling, erosion, corrosion, algae or slime. It is recommended that the services of a qualified water treatment specialist be engaged to determine what water treatment, if any, is required. Trane assumes no responsibility for equipment failures which result from untreated or improperly treated water, or saline or brackish water.

- Ensure coil and condensate drain piping connections are complete.
- Check the piping and valves for leaks.
  - Open or close the valves to check operation.
  - The drain lines should be open.
- If unit has a refrigerant coil, ensure that it has been charged and leak-tested according to the instructions provided with the condenser equipment. Adjust the superheat setting.
- Remove all foreign material from the drain pan and check the pan opening and condensate line for obstructions.
- For steam coils, slowly turn the steam on full for at least 10 minutes before opening the fresh air intake on units with fresh air dampers.

Motor-Related Checks

- Locate installation manual from the motor manufacturer for the specific motor installed. This can be found by contacting the motor manufacturer's representative. The motor manufacturer's recommendations take precedence for all matters related to the start-up and routine maintenance of the motor.
- Check the motor lubrication for moisture and rust.
  - Remove and clean grease plugs to inspect.
  - If moisture is present, consult an authorized repair shop for bearing inspection/replacement. This may require removal and transport of motor.
  - If no moisture is present, refer to the motor manufacturer's lubrication recommendations for proper lubrication.
  - The motor manufacturer may recommend lubricating the motor as part of their routine start-up instructions.
- Check motor winding. An acceptable winding resistance reading is from 6 meg-ohms to infinity. If reading is less than 5 mega-ohms, the winding should be dried out in an oven or by a blower.
- Inspect the entire motor for rust and corrosion.
- Bump-start the unit and confirm the fan wheel rotates properly, as indicated by the rotation arrow located on the fan housing.

Note: *For motor warranty needs, contact your local Trane sales office.*

Unit Operation

⚠ WARNING
Rotating Components!

During installation, testing, servicing and troubleshooting of this product it may be necessary to measure the speed of rotating components. Have a qualified or licensed service individual who has been properly trained in handling exposed rotating components, perform these tasks. Failure to follow all safety precautions when exposed to rotating components could result in death or serious injury.

⚠ WARNING
Live Electrical Components!

During installation, testing, servicing and troubleshooting of this product, it may be necessary to work with live electrical components. Have a qualified licensed electrician or other individual who has been properly trained in handling live electrical components perform these tasks. Failure to follow all electrical safety precautions when exposed to live electrical components could result in death or serious injury.

Before complete start-up, bump-start the unit and confirm the fan wheel rotates properly, as indicated by the rotation arrow located on the fan housing.

After initial startup:

- Calculate the motor voltage imbalance, notifying the power company to correct unacceptable imbalances.
- Periodically check the fan belt tension.

Calculate Motor Voltage Imbalance

After startup, measure the motor voltage and amperage on all phases to ensure proper operation. The readings should fall within the range given on the motor nameplate. The maximum allowable voltage imbalance is 2 percent.

Voltage imbalance is defined as 100 times the sum of the deviation of the three voltages from the average, divided by twice the average voltage. For example, if the three measured voltages are 221, 230 and 227, the average voltage would be 226 volts. The percent of voltage imbalance is then calculated.

$$\textbf{Voltage imbalance} = \frac{100A}{2 \times AvgVoltage}$$

where:
A = (226-221) + (230-226) + (227-226)

Voltage Imbalance = 2.2% (not acceptable)

In the example, 2.2 percent imbalance is not acceptable and the power company should be notified to correct it.

Tension the Fan Belt

NOTICE:

Belt Tension!

Do not over-tension belts. Excessive belt tension will reduce fan and motor bearing life, accelerate belt wear and possibly cause shaft failure. Under tensioning belts is the primary cause of premature belt failure. Belts should not squeal at startup. Recheck belt tension after 8 hours, 24 hours, and 100 hours of operation and monthly thereafter.

Figure 92. Tension drive belt label

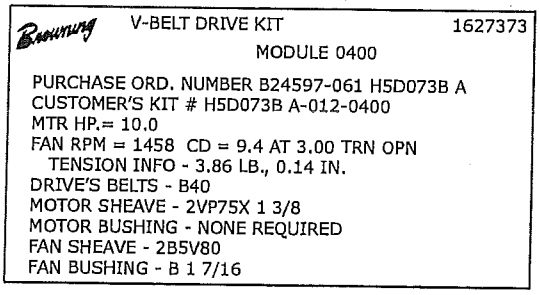

Proper belt tension is required to ensure maximum bearing and drive component life and is based on motor horsepower requirement. A label located on the bearing support on the drive side of the unit lists all drive parts, the proper belt tension, and deflection for that tension for the specific drive (Figure 92).

If the drive is changed from the original, proper belt tension can be estimated using Table 25.

The correct operation tension for a V-belt drive is the lowest tension at which the belts will not slip under the peak load conditions. It may be necessary, however, to increase the tension of some drives to reduce excessive belt flopping or to reduce excessive startup squealing.

Figure 93. Belt tensioner

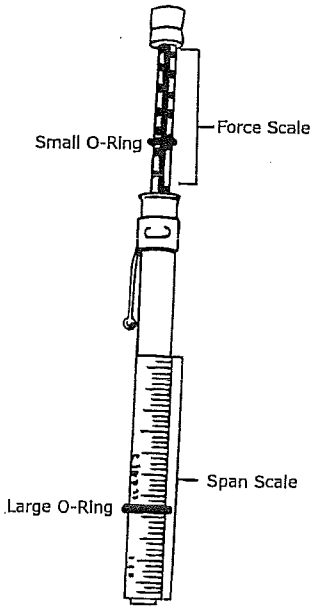

Check the fan belt tension at least three times during the first days of operation because there is a rapid decrease in tension until the belt settles in. To measure belt tension, use a belt tensiometer (see Figure 93). Determine actual deflection by depressing one belt with the belt tensiometer and measuring the deflection relative to the other belts or to belt line (see Figure 94). Adjust the belt tension to the correct pounds force and tighten all set screws to the proper torque.

Figure 94. Belt tension measurement

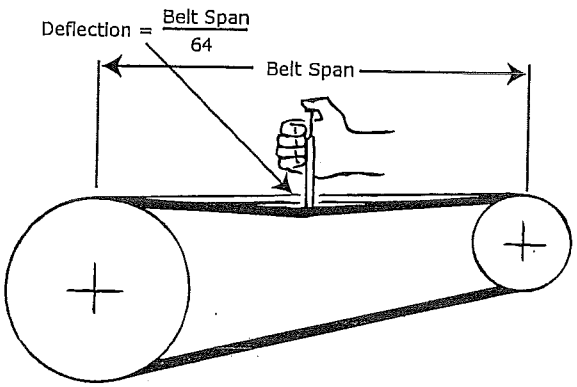

Table 25. Typical sheave diameter and deflection force

Cross section	Smallest sheave diameter range (in.)	Speed (rpm) range	Belt Deflection Force (lbs) Super gripbelts and unnotched gripbands Used belt	Super gripbelts and unnotched gripbands New belt	Gripnotch belts and notched gripbands Used belt	Gripnotch belts and notched gripbands New belt
A, AX	3.0–3.6	1,000–2,500	3.7	5.5	4.1	6.4
		2,501–4,000	2.8	4.2	3.4	5.0
	3.8–4.8	1,000–2,500	4.5	6.8	5.0	7.4
		2,501–4,000	3.8	5.7	4.3	6.4
	5.0–7.0	1,000–2,500	5.4	8.0	5.7	9.4
		2,501–4,000	4.7	7.0	5.1	7.6
B, BX	3.4–4.2	860–2,500	n/a	n/a	4.9	7.2
		2,501–4,000	n/a	n/a	4.2	6.2
	4.4–5.6	860–2,500	5.3	7.9	7.1	10.5
		2,501–4,000	4.5	6.7	7.1	9.1
	5.8–8.6	860–2,500	6.3	9.4	8.5	12.6
		2,501–4,000	6.0	8.9	7.3	10.9
C, CX	7.0–9.0	500–1,740	11.5	17.0	14.7	21.8
		1,741–3,000	9.4	13.8	11.9	17.5
	9.5–16.0	500–1,740	14.1	21.0	15.9	23.5
		1,741–3,000	12.5	18.5	14.6	21.6
D	12.0–16.0	200–850	24.9	37.0	n/a	n/a
		851–1,500	21.2	31.3	n/a	n/a
	18.0–20.0	200–850	30.4	45.2	n/a	n/a
		851–1,500	25.6	38.0	n/a	n/a
3V, 3VX	2.2–2.4	1,000–2,500	n/a	n/a	3.3	4.9
		2,501–4,000	n/a	n/a	2.9	4.3
	2.65–3.65	1,000–2,500	3.6	5.1	4.2	6.2
		2,501–4,000	3.0	4.4	3.8	5.6
	4.12–6.90	1,000–2,500	4.9	7.3	5.3	7.9
		2,501–4,000	4.4	6.6	4.9	7.3
5V, 5VX	4.4–6.7	500–1,749	n/a	n/a	10.2	15.2
		1,750–3,000	n/a	n/a	8.8	13.2
		3,001–4,000	n/a	n/a	5.6	8.5
	7.1–10.9	500–1,749	12.7	18.9	14.8	22.1
		1,750–3,000	11.2	16.7	13.7	20.1
	11.8–16.0	500–1,749	15.5	23.4	17.1	25.5
		1,750–3,000	14.6	21.8	16.8	25.0
8V	12.5–17.0	200–850	33.0	49.3	n/a	n/a
		851–1,500	26.8	39.9	n/a	n/a
	18.0–22.4	200–850	39.6	59.2	n/a	n/a
		851–1,500	35.3	52.7	n/a	n/a

Determine Fan Speed

⚠ WARNING
Rotating Components!

During installation, testing, servicing and troubleshooting of this product it may be necessary to measure the speed of rotating components. Have a qualified or licensed service individual who has been properly trained in handling exposed rotating components, perform these tasks. Failure to follow all safety precautions when exposed to rotating components could result in death or serious injury.

Fan speed can be determined using a strobe-type tachometer, or revolution counter.

Check unit vibration if the fan speed is changed more than five percent from the original designed speed, or if parts such as shafts, fan wheels, bearings, or other drive components are replaced. Do not exceed the maximum fan speed.

Pay particular attention to any vibration, noise, or overheating of the motor and fan bearings; however, note that bearings may run warm during break in.

Figure 95. Proper drive alignment

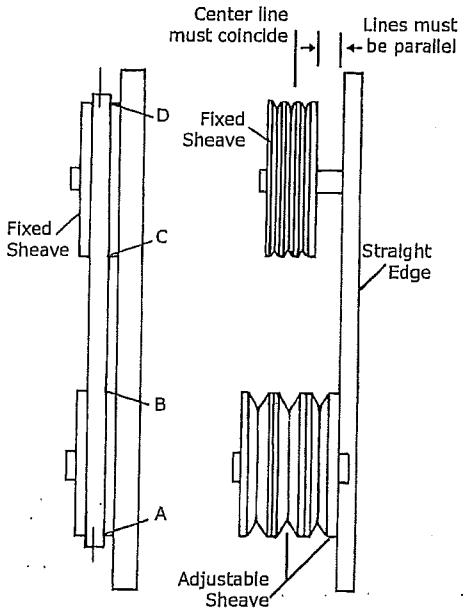

Align Fan and Motor Sheaves

Align the fan and motor sheaves using a straightedge. The straightedge must be long enough to span the distance between the outside edges of the sheaves. When the sheaves are aligned, the straightedge will touch both sheaves at points **A** through **D** (see Figure 95) to confirm the shaft is parallel. For uneven width sheaves, place a string in the center groove of both sheaves and pull tight. Adjust the sheaves and tighten the sheave set screws to the proper torque given in Table 26.

Check Multiple Belts

Tighten the belts slightly and rotate the drive several times.

On multiple belt drives, ensure the force of deflection is approximately the same on each belt by pushing each belt in an equal distance at a point halfway from each sheave (see Figure 95). If this force is not the same for each belt, the motor and fan shaft are not parallel. Realign as required. After realignment, tighten the belts again to the standard belt tensioning specifications. If the force is still not the same for all belts, the belts or sheaves are worn and must be replaced.

Table 26. Fan and drive compound torque settings (inches)

Screw Size	Hex Key	Square Head	Hex Head	Torque (in.-lb.)	Torque (ft.-lb.)
1/4	1/8	3/8	7/16	66-90	5.5-7.5
5/16	5/32	1/2	1/2	126-164	10.5-13.7
3/8	3/16	9/16	9/16	228-300	19.0-25.0
7/15	7/32	5/8	5/8	348-450	29.0-37.5
1/2	1/4	3/4	3/4	504-650	42.0-54.2
5/8	5/16	15/16	15/16	1290-1390	107.0-116.0
#10	3/32	-	-	28-40	2.3-3.3

Airflow Measuring Systems

Traq™ Dampers

Traq dampers are low-leak dampers that modulate and measure airflow. Each Traq damper section is supplied with a factory-mounted ventilation control module (VCM) on the interior of the mixing box section. The VCM has an input terminal for power and an output terminal for air velocity (see Figure 96). A direct-digital controller controls the factory-mounted and wired actuators.

Figure 96. Traq damper terminal connections

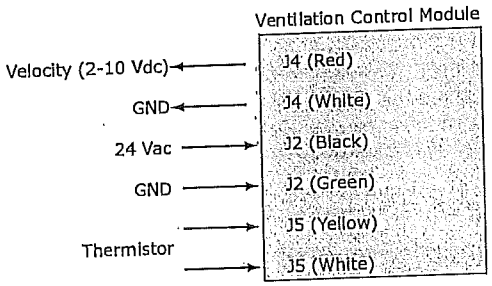

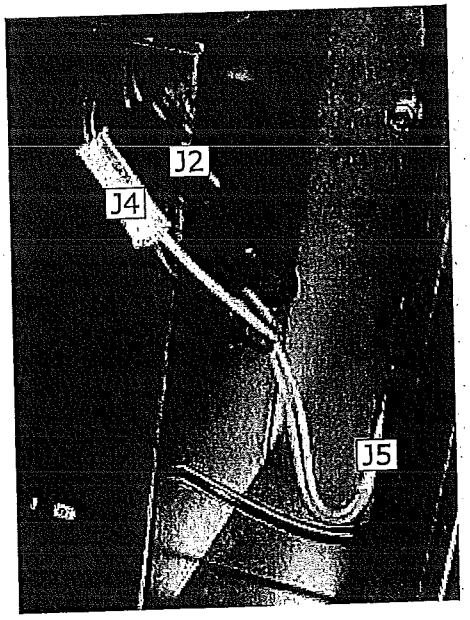

VCM (Transducer) Calibration. The VCM has an auto-zero function that recalibrates the transducer once every minute. When troubleshooting, allow for the recalibration time before making any measurements.

Input Power. The only input the VCM needs is the 24 Vac power connected to terminals 1TB1–5 and 1TB1–6.

Output Velocity Signal. The 2 to 10 Vdc linear output signal from the VCM represents air velocity. This voltage can be converted to represent airflow (cfm or L/s) using the formula below and Table 27.

$$\text{Airflow} = k\ (\text{cfm @ 10V}) \left[\frac{(\text{volts}-2)}{8}\right]$$
or
$$\text{Airflow} = k\ (\text{L/s @ 10V}) \left[\frac{(\text{volts}-2)}{8}\right]$$

For example, if the VCM on a size 30 air handler at sea level (k=1) has a 10-volt signal, it would represent 24,492 cfm (11,559 L/s) through the Traq damper. If the voltage were 6 volts, airflow through the Traq damper would be 12,246 cfm (5779 L/s).

Table 27. Altitude adjustment factors

Elevation (feet)	x
1000	0.982
2000	0.964
3000	0.949
4000	0.930
5000	0.914
6000	0.897
7000	0.876
8000	0.860
9000	0.846
10,000	0.825

In Table 28 through Table 31, the cfm at 10Vdc is a calculated value based on area and peak velocity. In certain situations, it can be advantageous to raise the velocity of air through the remaining Traq dampers by closing off one or more dampers in the unit. The cfm at 10Vdc can be recalculated based on the proportion of remaining Traq dampers or by multiplying the remaining area of dampers by peak velocity.

Table 28. Back or top inlet standard Traq dampers- air mixing and indoor economizer section-VCM voltage versus airflow at sea level

Unit Size	Part Number	Traq Damper Size (inches)	Quantity	Peak Velocity (fpm)	Total Area (ft^2)	CFM @ 10VDC Peak Velocity	L/s @ 10VDC Peak Velocity
3	50182901	13	1	2475	0.92	2279	1076
4 6	50182901	13	2	2475	1.84	4559	2151
8 10	50182901	13	3	2475	2.76	6838	3227
12 14 17	50182902	16	3	2475	4.19	10365	4891
21 25	50182924	20	3	2600	6.54	17012	8028
30 35 40	50182903	24	3	2600	9.42	24492	11558
50 57	50182904	28	3	2600	12.83	33358	15742
66	50182904	28	4	2600	17.10	44460	20981
80	50182904	28	5	2600	21.38	55588	26232
100 120	50182904	28	6	2600	25.66	66716	31483

Table 29. Side Inlet Standard Traq Dampers - Diagonal Economizer Section - VCM voltage versus airflow at sea level

Unit size	Part number	Traq damper size (in)	Quantity	Peak velocity (fpm)	Total area (ft2)	CFM@10VDC peak velocity	L/s@10VDC peak velocity
3			1		0.92	2279	1076
4 6 8	50182901	13	2	2475	1.84	4559	2151
10 12 14	50182902	16	2	2475	2.79	6905	3259
17	50182901	13	4	2475	3.68	9118	4303
21	50182924	20	2	2600	4.36	11341	5352
25	50182902	16	4	2475	5.58	13820	6522
30	50182924	20	3	2600	6.54	17012	8028
35 40	50182904	28	2	2600	8.55	22224	10488
50	50182903	24	3	2600	9.42	24492	11558
57	50182903	24	4	2600	12.56	32656	15410
66	50182904	28	3	2600	12.82	33336	15731
80	50182904	28	4	2600	17.10	44448	20975
100 120	50182904	28	5	2600	21.37	55561	26219

Table 30. Side inlet low-flow Traq dampers - diagonal economizer section - VCM voltage versus airflow at sea level

Unit size	Part number	Traq damper size (in)	Quantity	Peak velocity (fpm)	Total area (ft2)	CFM 10VDC Less peak velocity	CFM 10VDC peak velocity	Unit size
4	50182901	13	Min. Outside Air	1	2475	0.92	2279	1076
			Economizing	1		0.92	2279	1076
6			Min. Outside Air	1		0.92	2279	1076
			Economizing	1		0.92	2279	1076
8			Min. Outside Air	1		0.92	2279	1076
			Economizing	1		0.92	2279	1076
10	50182902	16	Min. Outside Air	1	2475	1.40	3455	1630
			Economizing	1		1.40	3455	1630
12			Min. Outside Air	1		1.40	3455	1630
			Economizing	1		1.40	3455	1630
14			Min. Outside Air	1		1.40	3455	1630
			Economizing	1		1.40	3455	1630
17	50182901	13	Min. Outside Air	1	2475	0.92	2279	1076
			Economizing	3		2.76	6838	3227
21	50182924	20	Min. Outside Air	1	2600	2.18	5671	2676
			Economizing	1		2.18	5671	2676
25	50182902	16	Min. Outside Air	1	2600	1.40	3630	1713
			Economizing	3		4.19	10889	5138
30	50182924	20	Min. Outside Air	1	2600	2.18	5671	2676
			Economizing	2		4.36	11341	5352
35	50182904	28	Min. Outside Air	1	2600	4.27	11112	5244
			Economizing	1		4.27	11112	5244
40			Min. Outside Air	1		4.27	11112	5244
			Economizing	1		4.27	11112	5244
50	50182903	24	Min. Outside Air	1	2600	3.14	8164	3853
			Economizing	2		6.28	16328	7705
57	50182903	24	Min. Outside Air	1	2600	3.14	8164	3853
			Economizing	3		9.42	24492	11558
66	50182904	28	Min. Outside Air	1	2600	4.27	11112	5244
			Economizing	2		8.55	22224	10488
80	50182904	28	Min. Outside Air	1	2600	4.27	11112	5244
			Economizing	3		12.82	33336	15731
100	50182904	28	Min. Outside Air	1	2600	4.27	11112	5244
			Economizing	4		17.10	44448	20975
120			Min. Outside Air	1		4.27	11112	5244
			Economizing	4		17.10	44448	20975

Table 31. Back or top inlet low-flow Traq dampers - air-mixing and indoor economizer sections - VCM voltage versus airflow at sea level

Unit Size	Part Number	Traq Damper Size (in)	Damper Type	Quantity	Peak Velocity (fpm)	Total Area (ft²)	CFM @ 10VDC Peak Velocity	L/s @ 10VDC Peak Velocity
4	50182901	13	Min. Outside Air	1	2475	0.92	2279	1076
			Economizing	1		0.92	2279	1076
6	50182901	13	Min. Outside Air	1	2475	0.92	2279	1076
			Economizing	1		0.92	2279	1076
8	50182901	13	Min. Outside Air	1	2475	0.92	2279	1076
			Economizing	2		1.84	4554	2149
10	50182901	13	Min. Outside Air	1	2475	0.92	2279	1076
			Economizing	2		1.84	4554	2149
12	50182902	16	Min. Outside Air	1	2475	1.40	3455	1630
			Economizing	2		2.79	6910	3261
14	50182902	16	Min. Outside Air	1	2475	1.40	3455	1630
			Economizing	2		2.79	6910	3261
17	50182902	16	Min. Outside Air	1	2475	1.40	3455	1630
			Economizing	2		2.79	6910	3261
21	50182924	20	Min. Outside Air	1	2600	2.18	5671	2676
			Economizing	2		4.36	11341	5352
25	50182924	20	Min. Outside Air	1	2600	2.18	5671	2676
			Economizing	2		4.36	11341	5352
30	50182903	24	Min. Outside Air	1	2600	3.14	8164	3853
			Economizing	2		6.28	16328	7705
35	50182903	24	Min. Outside Air	1	2600	3.14	8164	3853
			Economizing	2		6.28	16328	7705
40	50182903	24	Min. Outside Air	1	2600	3.14	8164	3853
			Economizing	2		6.28	16328	7705
50	50182904	28	Min. Outside Air	1	2600	4.27	11112	5244
			Economizing	2		8.55	22224	10488
57	50182904	28	Min. Outside Air	1	2600	4.27	11112	5244
			Economizing	2		8.55	22224	10488
66	50182904	28	Min. Outside Air	1	2600	4.27	11112	5244
			Economizing	3		12.82	33336	15731
80	50182904	28	Min. Outside Air	1	2600	4.27	11112	5244
			Economizing	4		17.10	44448	20975
100	50182904	28	Min. Outside Air	1	2600	4.27	11112	5244
			Economizing	5		8.55	22224	10488
120	50182904	28	Min. Outside Air	1	2600	4.27	11112	5244
			Economizing	5		21.37	55561	26219

Trane utilizes AMCA certification for airflow measuring stations. Trane certifies that the Traq damper herein is licensed to bear the AMCA seal. The ratings shown are based on tests and procedures performed in accordance with AMCA Publication 611 and comply with the requirements of the AMCA Certified Ratings Program.

The certification program provides the engineer and owner assurance that manufacturer-published performance ratings for airflow measurement stations are accurate and repeatable. Trane Traq dampers are certified with the integral ventilation control module which converts differential pressure to an electronic signal for control.

Refer to Performance Climate Changer Air Handler catalog CLCH-PRC015-EN for Traq damper testing and rating information.

Fan Inlet Airflow Measuring System

Figure 97. Piezometer airflow measurement

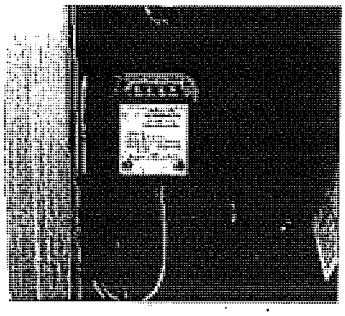

A fan inlet airflow measuring system with a piezometer ring is available on many centrifugal and plenum fans. Each system comes with a differential pressure transmitter. The piezometer ring is connected to the LO port of the transmitter and the reference pressure point is connected to (or actually is) the HI port of the transmitter.

Wiring

The transmitter requires 24VDC power on terminals 1 (+) and 2 (ground) on the transmitter. When the piezometer airflow measurement is ordered with a factory-mounted MP580 controller, the 24 VDC power will be supplied.

In the absence of a factory-provided MP580 controller, the installing contractor must ensure the transmitter has 24VDC power.

Note: *Ensure that the transmitter has a separate power source.*

Transmitter Calibration

The transmitter is factory-calibrated to a specific pressure range with a 0-20 inch w.g. range being used in most cases. To check calibration and to adjust if necessary, consult the transmitter manufacturer or the factory for specific procedures.

The transmitter outputs a linear, 2-10 VDC signal representing a differential pressure measurement. With this measurement, the airflow through the fan can be calculated using the following equation:

CFM = K * SQRT(DP)
Where:
CFM = Airflow (ft^3/min.) assuming a standard air density of 0.075 lbm/ft^3.
K = A constant factor that is unique for each fan. See next section for more information.
DP = Differential pressure (inches w.g.) being measured by the transmitter.

Significant differences in elevation and/or temperature will affect the density of air. For air at a constant, non-standard density, a field-obtained K factor can be used. Alternatively, the following equation can be used to continuously correct the equation above:

ACFM = CFM * SQRT(0.075/ρ)
Where:
ACFM = Actual airflow (ft^3/min.) corrected for non-standard air density.
ρ = Density (lbm/ft^3) of the air at the inlet to the fan.

Note: *Alternative units, including SI, can be used in place of the IP units above although the K-factor must be converted appropriately.*

Constant Factor K

The constant factor K is unique for each fan and is primarily a function of the area and the geometry of the fan inlet. Pre-engineered factors are available from the factory for fan types where the airflow measurement system is available. See Table 32.

Table 32. Constant K Factors

Fan Size (inches) / Type	Fan Class	Fan Name	K-Factor
9 BC	Class I	9 BA	935.0
9 BC	Class II	9 BB	868.2
10 BC	Class I	10 BA	1072.5
10 BC	Class II	10 BB	1072.5
12 AF	Class I	12 AA	2337.5
12 AF	Class II	12 AB	2237.3
15 AF	Class I	15 AA	3873.6
15 AF	Class II	15 AB	3873.6
18 AF	Class I	18 AA	4675.0
18 AF	Class II	18 AB	4675.0
20 AF	Class I	20 AA	5843.7
20 AF	Class II	20 AB	5119.9
22 AF	Class I	22 AA	7513.4
22 AF	Class II	22 AB	6624.1
25 AF	Class I	25 AA	9683.9
25 AF	Class II	25 AB	8891.1
28 AF	Class I	28 AA	12856.2
28 AF	Class II	28 AB	11795.0
32 AF	Class I	32 AA	16295.6
32 AF	Class II	32 AB	16295.6
36 AF	Class I	36 AA	19701.7
36 AF	Class II	36 AB	19367.8
40 AF[1]	Class I	40 AA	23374.9
40 AF[2]	Class II	40 AA	25378.4
40 AF[1]	Class I	40 AB	22974.2
40 AF[2]	Class II	40 AB	25044.5
44 AF	Class I	44 AA	30113.0
44 AF	Class II	44 AA	30113.0
49 AF	Class I	49 AB	37470.0
49 AF	Class II	49 AB	37470.0
20 FC	Class I	20 FA	7300.0
20 FC	Class II	20 FB	7203.9
22 FC	Class I	22 FA	9081.9
22 FC	Class II	22 FB	8793.1
25 FC	Class I	25 FA	12030.0
25 FC	Class II	25 FB	11700.0
28 FC	Class I	28 FA	14450.0
28 FC	Class II	28 FB	14036.0

Note: [1]to be used for fan rpm < 700 or cfm < 25,500. [2]to be used for fan rpm > 700 or cfm > 25,500

Table 32. Constant K Factors

Fan Size (Inches)/Type	Fan Class	Fan Name	K Factor
32 FC	Class I	32 FA	20400.0
32 FC	Class II	32 FB	20150.0
36 FC	Class I	36 FA	28049.9
36 FC	Class II	36 FB	27549.0
40 FC	Class I	40 FA	39236.4
40 FC	Class II	40 FB	38067.7
10 BC belt-drive plenum	Class I or II	10 PA or 10 PB	563.0
11 BC belt-drive plenum	Class I or II	11PA or 11 PB	703.0
12 AF belt-drive plenum	Class I or II	12PA or 12 PB	1168.7
14 AF belt-drive plenum	Class I or II	14PA or 14 PB	1536.1
16 AF belt-drive plenum	Class I or II	16PA or 16 PB	1870.
18 AF belt-drive plenum	Class I or II	18PA or 18 PB	2270.7
20 AF belt-drive plenum	Class I or II	20PA or 20 PB	2905.2
22 AF belt-drive plenum	Class I or II	22PA or 22 PB	3673.2
25 AF belt-drive plenum	Class I or II	25PA or 25 PB	4608.2
28 AF belt-drive plenum	Class I or II	28 PA or 28 PB	6277.8
32 AF belt-drive plenum	Class I or II	32 PA or 32 PB	7847.3
36 AF belt-drive plenum	Class I or II	36 PA or 36 PB	10017.8
40 AF belt-drive plenum	Class I or II	40 PA or 40 PB	13023.1
44 AF belt-drive plenum	Class I or II	44 PA or 44 PB	14692.8
49 AF belt-drive plenum	Class I or II	49 PA or 49 PB	18299.2
55 AF belt-drive plenum	Class I or II	55 PA or 55 PB	23901.0
63 AF belt-drive plenum	Class I or II	63 PA or 63 PB	31135.0
10.5 AF direct-drive plenum	Class II	10 NF or 10 NW	630
13.5 AF direct-drive plenum	Class II	13 NR or 13 NF	952
15 AF direct-drive plenum	Class II	15 NR or 15 NF	1139
18 AF direct-drive plenum	Class II	18 NR or 18 NF	1673
20 AF direct-drive plenum	Class II	20 NR or 20 NF	1942
22 AF direct-drive plenum	Class II	22 NR, 22 NF, or 22 NW	2454
24 AF direct-drive plenum	Class II	24 NR, 24 NF, or 24 NW	3010
27 AF direct-drive plenum	Class II	27 NR or 27 NF	3701
30 AF direct-drive plenum	Class II	30 NR or 30 NF	4620
22 AF stacked direct-drive plenum	Class II	22 SF or 22 SW	2849
24.5 AF stacked direct-drive plenum	Class II	24 SF or 24 SW	4765

Note: (1) to be used for fan rpm < 700 or cfm < 25,500. (2) to be used for fan rpm > 700 or cfm > 25,500

Field-obtained factors can provide maximum accuracy. To obtain the factor in the field, measure the differential pressure output from the transmitter while measuring the airflow through the system. Once these two values have been measured, simply solve for K using the following equation:

K = ACFM/SQRT(DP)
Where:
K = Field-provided constant factor.
ACFM = Actual airflow (ft^3/min.) being measured at the air density being measured.
DP = Differential pressure (inches w.g.) being measured by the transmitter.

External Insulating Requirements

The following areas should be specifically addressed, as applicable:

- Supply and return water piping connections
- Supply and return refrigerant piping connections
- Condensate drain lines and connections
- Outdoor-air-intake duct connections
- Discharge duct connections
- Special requirements for low-temperature-air systems

Troubleshooting

This section is intended to be used as a diagnostic aid only. For detailed repair procedures, contact your local Trane service representative.

⚠ WARNING
Hazardous Service Procedures!

The maintenance and troubleshooting procedures recommended in this section of the manual could result in exposure to electrical, mechanical or other potential safety hazards. Always refer to the safety warnings provided throughout this manual concerning these procedures. When possible, disconnect all electrical power including remote disconnect and discharge all energy storing devices such as capacitors before servicing. Follow proper lockout/tagout procedures to ensure the equipment cannot be inadvertently energized. When necessary to work with live electrical components, have a qualified licensed electrician or other individual who has been trained in handling live electrical components perform these tasks. Failure to follow all of the recommended safety warnings provided, could result in death or serious injury.

Table 33. Air handler troubleshooting recommendations

Symptom	Probable Cause	Recommended Action
Bearing is excessively hot	First start after relubrication (Grease distribution)	Allow machine to cool down and restart.
	Over-lubrication	Clean surface of grease and purge.
	Over tensioned belts	Adjust belt tension.
	No lubricant	Apply lubricant. Check bearings for damage.
	Misaligned bearing	Correct alignment. Check shaft level.
Motor fails to start	Blown fuse or open circuit breaker	Replace fuse or reset circuit breaker.
	Overload trip	Check and reset overload.
	Improper wiring or connections	Check wiring with diagram supplied on unit.
	Improper current supply	Compare actual supply power with motor nameplate recommendations. Contact power company for adjustments.
	Mechanical failure	Check that motor and drive rotate freely. Check bearing lubricant.
Motor stalls	Open phase	Check line for an open phase.
	Overloaded motor	Reduce load or replace with larger motor.
	Low line voltage	Check across AC line. Correct voltage if possible.
Excessive vibration	Poor alignment	Align bearing set screws (see Table 26 on page 108). Loosen and retighten bearing set screws.
	Shipping spacers not removed	Remove shipping spacers and/or bolts (see "Fan Isolation" on page 61).
	Over tensioned belts	Adjust belt tension.
	Misaligned drive	Align drive.
Motor runs and then dies down	Partial loss of line voltage	Check for loose connections. Determine adequacy of main power supply.
	Starter shorts when motor warms up	Replace starter.
Motor does not come up to speed	Low voltage at motor terminals	Check across AC line and correct voltage loss if possible.
	Line wiring to motor too small	Replace with larger sized wiring.
Motor overheats	Overloaded motor	Reduce load or replace with a larger motor.
	Motor fan is clogged with dirt preventing proper ventilation	Remove fan cover, clean fan and replace cover.
Excessive motor noise	Motor mounting bolts loose	Tighten motor mounting bolts.
	Rigid coupling connections	Replace with flexible connections.
	Worn motor bearings	Replace bearings and seals.
	Fan rubbing on fan cover	Remove interference in motor fan housing.
Rapid motor bearing wear	Excessive overhung load due to overtensioned drive	Check belt tension and overhung load.
	Excessive overhung load due to a small diameter motor sheave	Replace sheave with larger one.
Loose fan belt	Motor is poorly positioned	Adjust belt tension.
	Worn or damaged belt	Replace belt or belt set. Check sheave alignment.
	Worn sheaves	Replace sheaves.

Table 33. Air handler troubleshooting recommendations

Symptom	Probable Cause	Recommended Action
Short belt life	Worn sheaves	Replace sheaves.
	Misaligned belt	Realign drive with MVP sheave set at mean pitch diameter.
	Grease or oil on belts	Check for leaky bearings. Clean belts and sheaves.
	Belt slipping	Improper belt tension. Adjust tension.
	Belts rubbing	Remove obstruction or realign drive for clearance.
Bearing noise	Poor alignment	Loosen bearing set screws and realign (see the "Align Fan and Motor Sheaves" section on page 108)
	Failed bearing	Replace bearing.
	Inadequate lubrication	Replace bearing.
Low water coil capacity	Incorrect airflow	Check fan operating condition.
	Incorrect water flow	Inspect the water pumps and valves for proper operation and check the lines for obstructions.
	Incorrect water temperature	Adjust the chiller or boiler to provide the proper water temperature.
	Coil is piped incorrectly	Verify coil piping (see the "Coil Piping and Connections" section on page 79).
	Dirty fin surface	Clean the fin surface (see the "Coils" section on page 124).
	Incorrect glycol mixture	Verify glycol mixture and adjust if necessary.
Low refrigerant coil capacity	Incorrect airflow	Check fan operating condition.
	Expansion valve is not operating properly or is sized incorrectly	Check sensing bulb temperature. Verify valve operation. Verify proper valve size.
	Incorrect refrigerant charge	Verify refrigerant charge and adjust if necessary.
	Condensing unit failure	Verify condensing unit operation.
	Coil is piped incorrectly	Verify coil piping (see the "Coil Piping and Connections" section on page 79.)
	Clogged refrigerant line filter	Change filter core.
	Failure of suction/liquid line components	Verify component operation
	Dirty fin surface	Clean the fin surface (see the "Coils" section on page 124). Do not use steam to clean refrigerant coils.
	Fin frosting	Verify defrost cycle operation. Verify frostat operation. Verify refrigerant charge.
Low steam coil capacity	Incorrect airflow	Check fan operating condition.
	Coil is piped incorrectly	Verify coil piping (see the "Coil Piping and Connections" section on page 79).
	Incorrect steam pressure	Verify steam pressure and adjust if necessary.
	Excessive steam superheat	Check steam superheat. Steam superheat should not exceed 50°F.
	Failure of steam line/condensate return components	Verify component operation
	Boiler failure	Verify boiler operation
	Dirty fin surface	Clean the fin surface (see the "Coils" section on page 124).
Drain pan is overflowing	Plugged Drain Line	Clean drain line
	Unit not level	Level unit
	Improper trap design	Design trap per unit installation instructions
Standing water in drain pan	Improper trap design	Design trap per unit installation instructions
	Unit not level	Level unit
	Plugged drain line	Clean drain line
Wet interior	Coil face velocity too high	Reduce fan speed
	Improper trap design	Design trap per unit installation instructions
	Drain pan leaks/overflows	Repair leaks
	Condensation on surfaces	Insulate surfaces
Excess dirt in unit	Missing filters	Replace filters
	Filter bypass	Reduce filter bypass by ensuring all blockoffs are in place.
Microbial growth (mold) inside air handler	Standing water in drain pan	See "Standing water in drain pan" above

Routine Maintenance

The following checklist is provided as an abbreviated guide to periodic maintenance. Detailed procedural information is given after this checklist.

⚠ WARNING
Hazardous Service Procedures!

The maintenance and troubleshooting procedures recommended in this section of the manual could result in exposure to electrical, mechanical or other potential safety hazards. Always refer to the safety warnings provided throughout this manual concerning these procedures. When possible, disconnect all electrical power including remote disconnect and discharge all energy storing devices such as capacitors before servicing. Follow proper lockout/tagout procedures to ensure the equipment cannot be inadvertently energized. When necessary to work with live electrical components, have a qualified licensed electrician or other individual who has been trained in handling live electrical components perform these tasks. Failure to follow all of the recommended safety warnings provided, could result in death or serious injury.

⚠ WARNING
Rotating Components!

Disconnect all electric power, including remote disconnects before servicing. Follow proper lockout/ tagout procedures to ensure the equipment can not be inadvertently energized. Secure drive sheaves to ensure rotor cannot freewheel. Failure to secure drive sheaves or disconnect power before servicing could result in death or serious injury.

Maintenance Checklist

Table 34. Maintenance Checklist

Frequency	Maintenance
After 48 hours of operation	Belts have acquired their permanent set. Readjust but do not overtighten. See "Tension the Fan Belt" on page 106 for more information.
Every week	Observe unit weekly for any change in running condition and unusual noise.
Every month	• Clean or replace air filters if clogged or dirty; coat permanent filters with oil after cleaning; change bag filters when pressure drop is 1 in. wg. See "Air Filters" on page 121 for more information. • Relubricate fan bearings if necessary. See "Fan Bearing Lubrication" on page 123 for more information. • Check and adjust fan belt tension.
Every three to six months	• Check fan bearing grease line connections. Lines should be tight to the bearings. • Check bearing and motor bracket bolt torque and bearing setscrew torque. • Align fan and motor sheaves. Tighten sheave set screws to the proper torque. See "Align Fan and Motor Sheaves" on page 108 for more information. • Inspect and clean drain pans. See "Drain Pans" on page 121 for more information. • Tighten electrical connections. • Inspect coils for dirt build-up. See "Coils" on page 124 for more information.
Every year	• Inspect the unit casing for corrosion. If damage is found, clean and repaint. • Clean the fan wheels and fan shaft. See "Fans" on page 122 for more information. • Inspect and clean drain pans. • Check damper linkages, set screws, and blade adjustment. Clean, but do not lubricate, the nylon damper rod bushings. • Clean damper operators. • Inspect electrical components and insulation. • Inspect wiring for damage. • Rotate the fan wheel and check for obstructions in the fan housing. The wheel should not rub on the fan housing. Adjust the center if necessary and tighten wheel set screws to the proper torque. • Lubricate motor bearings in accordance with motor manufacturer's recommendations (see "Fan Bearing Lubrication" on page 123 for more information). • Check condition of gasketing and insulation around unit, door and dampers. • Examine flex connections for cracks or leaks. Repair or replace damaged material.

Air Filters

⚠ WARNING
Rotating Components!

Disconnect all electric power, including remote disconnects before servicing. Follow proper lockout/ tagout procedures to ensure the equipment cannot be inadvertently energized. Secure drive sheaves to ensure rotor cannot freewheel. Failure to secure drive sheaves or disconnect power before servicing could result in death or serious injury.

Refer to product catalog for filter sizes, types, and quantities.

Throwaway Filters

To replace throwaway filters, install new filters with the directional arrows pointing in the direction of airflow.

Note: *Bag and cartridge filters must have an airtight seal to prevent air bypass. If using filters not supplied by Trane, apply foam gasketing to the vertical edges of the filter.*

Permanent Filters

To clean permanent filters:

1. Disconnect all electrical power to the unit.
2. Wash the filter under a stream of water to remove dirt and lint.
3. Remove oil from the filter with a wash of mild alkali solution.
4. Rinse the filter in clean, hot water and allow to dry.
5. Coat both sides of the filter by immersing or spraying it with Air Maze Filter Kote W or an equivalent.
6. Allow to drain and dry for about 12 hours.
7. Reinstall the filter.

Note: *It may be preferable to keep extra, clean filters to replace the dirty filters to minimize unit downtime for filter maintenance.*

Cartridge or Bag Filters

To replace cartridge or bag filters:

1. Disconnect all electrical power to the unit.
2. Remove the dirty filters from their installed position.
3. Keeping the new bag filters folded, slide each filter into the filter rack, pushing them tightly against the unit.

Note: *The pleats should be in the vertical position.*

4. If using the optional pre-filters, replace them on the appropriate filter rack.
5. Close and secure the access door.

Drain Pans

⚠ WARNING
Hazardous Voltage!

Disconnect all electric power, including remote disconnects before servicing. Follow proper lockout/tagout procedures to ensure the power can not be inadvertently energized. Failure to disconnect power before servicing could result in death or serious injury.

⚠ WARNING
No Step Surface!

Do not walk on the sheet metal drain pan. Walking on the drain pan could cause the supporting metal to collapse. Failure of the drain pan could result in death or serious injury.

The condensate drain pan and drain line must be checked to assure the condensate drains as designed. This inspection should occur a minimum of every six months or more often as dictated by operating experience.

If evidence of standing water or condensate overflow exists, identify and remedy the cause immediately. Refer to "Troubleshooting" on page 118 for possible causes and solutions.

To clean drain pans:

1. Disconnect all electrical power to the unit.
2. Wearing the appropriate personal protective equipment, remove any standing water.
3. Scrape solid matter off of the drain pan.
4. Vacuum the drain pan with a vacuum device that uses high-efficiency particulate arrestance (HEPA) filters with a minimum efficiency of 99.97 percent at 0.3 micron particle size.
5. Thoroughly clean any contaminated area(s) with a mild bleach and water solution or an EPA-approved sanitizer specifically designed for HVAC use.
6. Immediately rinse the affected surfaces thoroughly with fresh water and a fresh sponge to prevent potential corrosion of metal surfaces.
7. Allow the unit to dry completely before putting it back into service.
8. Be careful any contaminated material does not contact other areas of the unit or building. Properly dispose of all contaminated materials and cleaning solution.

Fans

Inspecting and Cleaning Fans

⚠ WARNING
Rotating Components!

Disconnect all electric power, including remote disconnects before servicing. Follow proper lockout/ tagout procedures to ensure the equipment cannot be inadvertently energized. Secure drive sheaves to ensure rotor cannot freewheel. Failure to secure drive sheaves or disconnect power before servicing could result in death or serious injury.

Fan sections of air handlers should be inspected every six months at a minimum or more frequently if operating experience dictates. If evidence of microbial growth (mold) is found, identify and remedy the cause immediately. Refer to "Troubleshooting" on page 118 for possible causes and solutions. To clean the fan section:

1. Disconnect all electrical power to the unit.
2. Wearing the appropriate personal protective equipment, remove any contamination.
3. Vacuum the section with a vacuum device that uses high-efficiency particulate arrestance (HEPA) filters with a minimum efficiency of 99.97 percent at 0.3 micron particle size.
4. Thoroughly clean any contaminated area(s) with a mild bleach and water solution or an EPA-approved sanitizer specifically designed for HVAC use.
5. Immediately rinse the affected surfaces thoroughly with fresh water and a fresh sponge to prevent potential corrosion of metal surfaces.
6. Allow the unit to dry completely before putting it back into service.

7. Be careful any contaminated material does not contact other areas of the unit or building. Properly dispose of all contaminated materials and cleaning solution.

Bearing Set Screw Alignment

Figure 98. Alignment

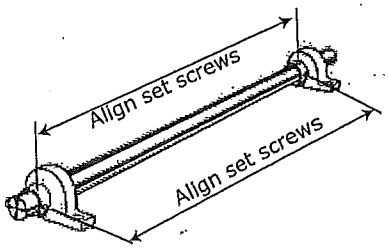

Align bearing set screws as illustrated in Figure 98. Table 10 on page 64 provides bearing set screw torque measurements.

Fan Bearing Lubrication

NOTICE:
Bearing Failure!

Do not mix greases with different bases within the bearing. Mixing grease within the bearing could result in premature bearing failure.

The grease used in electric motor bearings is usually not compatible with the grease used in fan bearings. Never mix the two grease types! See Table 35 for compatible greases and Table 36 for maximum grease capacity.

Note: *Lubricate the bearing according to the motor manufacturer's recommendations and use the manufacturer-recommended grease.*

- Fan bearings without lubrication lines are sealed bearings. Re-lubrication is not required.
- Fan bearings equipped with lubrication lines should be lubricated with a lithium-based grease that conforms to NLGI No. 2 for consistency.

Table 35. Compatible Greases

Type
Texaco Multi Fak 2
Shell Alvania 2
Mobil 532
Chevron Dura-Lith 2
Exxon Beacon
Keystone 84H

Table 36. Fan bearing maximum grease capacity

Shaft size (inches)	Capacity (fluid ounce)
1/2 - 3/4	1/7
7/8 - 1 3/16	3/8
1 1/4 - 1 1/2	5/8
1 11/16 - 1 15/16	7/8
2 - 2 7/16	1 1/4
2 1/2 - 2 15/16	2

Refer to Table 37 for minimum torque of motor mounting and bearings bolts.

Table 37. Minimum hex head bolt torque in lb.-ft. (Grade 5 bolts)

Size (inches)	Thread Designation	Minimum Torque
1/4-20	UNC	6
1/4-28	UNF	7
65/16-18	UNC	14
5/16-24	UNF	16
3/8-16	UNC	24
3/8-24	UNF	28
7/16-14	UNC	42
7/16-20	UNF	45
1/2-13	UNC	69
1/2-20	UNF	83
9/16-12	UNC	99
9/16-18	UNF	118
5/8-11	UNC	150
5/8-18	UNF	176
3/4-10	UNC	254
3/4-16	UNF	301
7/8-9	UNC	358
7/8-14	UNF	422
1-8	UNC	500
1-14	UNF	602

Note: Soft metric conversions are not acceptable for screw and hex sizes.

Motor Bearing Lubrication

Obtain an IOM from the motor manufacturer for the specific motor installed. The motor manufacturer's recommendations take precedence for all matters related to the start-up and routine maintenance of the motor.

Motor grease fittings have been removed from factory-installed motors in compliance with UL regulations. Motor bearings require periodic maintenance throughout their life. Many different styles of motors come as standard selections, so please obtain the motor IOM and use the manufacturer-recommended grease.

Fan Motor Inspection

Inspect fan motors periodically for excessive vibration or temperature.

Coils

All coils should be kept clean to maintain maximum performance.

Steam and Water Coils

⚠ WARNING

Hazardous Chemicals!

Coil cleaning agents can be either acidic or highly alkaline. Handle chemical carefully. Proper handling should include goggles or face shield, chemical resistant gloves, boots, apron or suit as required. For personal safety refer to the cleaning agent manufacturer's Materials Safety Data Sheet and follow all recommended safe handling practices. Failure to follow all safety instructions could result in death or serious injury.

⚠ WARNING
Hazardous Voltage!

Disconnect all electric power, including remote disconnects before servicing. Follow proper lockout/tagout procedure to ensure the power cannot be inadvertently energized. Failure to disconnect power before servicing could result in death or serious injury.

To clean steam and water coils:

1. Disconnect all electrical power to the unit.
2. Wearing the appropriate personal protective equipment, use a soft brush to remove loose debris from both sides of the coil.
3. Install a block-off to prevent spray from going through the coil and into a dry section of the unit and/or system ductwork.
4. Mix a high-quality coil cleaning detergent with water according to the manufacturer's instructions.

Note: *If the detergent is strongly alkaline after mixing (PH 8.5 or higher), it must contain an inhibitor. Follow the cleaning solution manufacturer's instructions regarding the use of the product.*

5. Place the mixed solution in a garden pump-up sprayer or high-pressure sprayer. If a high pressure sprayer is to be used:
   - Maintain minimum nozzle spray angle of 15 degrees.
   - Spray perpendicular to the coil face.
   - Keep the nozzle at least 6 inches from the coil.
   - Do *not* exceed 600 psi.
6. Spray the leaving air side of the coil first, then the entering air side.
7. Thoroughly rinse both sides of the coil and the drain pan with cool, clean water.
8. Repeat steps 6 and 7 as necessary.
9. Straighten any coil fins that may have been damaged during the cleaning process.
10. Confirm the drain line is open following the cleaning process.
11. Allow the unit to dry thoroughly before putting it back into service.
12. Replace all panels and parts and restore electrical power to the unit.
13. Be careful any contaminated material does not contact other areas of the unit or building. Properly dispose of all contaminated materials.

Refrigerant Coils

⚠ WARNING
Hazardous Pressures!

Coils contain refrigerant under pressure. When cleaning coils, maintain coil cleaning solution temperature under 150°F to avoid excessive pressure in the coil. Failure to follow these safety precautions could result in coil bursting, which could result in death or serious injury.

⚠ WARNING
Hazardous Chemicals!

Coil cleaning agents can be either acidic or highly alkaline. Handle chemical carefully. Proper handling should include goggles or face shield, chemical resistant gloves, boots, apron or suit as required. For personal safety refer to the cleaning agent manufacturer's Materials Safety Data Sheet and follow all recommended safe handling practices. Failure to follow all safety instructions could result in death or serious injury.

⚠ WARNING
Hazardous Voltage!

Disconnect all electric power, including remote disconnects before servicing. Follow proper lockout/tagout procedure to ensure the power cannot be inadvertently energized. Failure to disconnect power before servicing could result in death or serious injury.

To clean refrigerant coils:

1. Disconnect all electrical power to the unit.
2. Wearing the appropriate personal protective equipment, use a soft brush to remove loose debris from both sides of the coil.
3. Install a block-off to prevent spray from going through the coil and into a dry section of the unit and/or system ductwork.
4. Mix a high-quality coil cleaning detergent with water according to the manufacturer's instructions.

Note: *If the detergent is strongly alkaline after mixing (PH 8.5 or higher), it must contain an inhibitor. Follow the cleaning solution manufacturer's instructions regarding the use of the product.*

5. Place the mixed solution in a garden pump-up sprayer or high-pressure sprayer. If a high pressure sprayer is to be used:
   a. Maintain minimum nozzle spray angle of 15 degrees.
   b. Spray perpendicular to the coil face.
   c. Keep the nozzle at least 6 inches from the coil.
   d. Do *not* exceed 600 psi.
6. Spray the leaving air side of the coil first, then the entering air side.
7. Thoroughly rinse both sides of the coil and the drain pan with cool, clean water.
8. Repeat steps 6 and 7 as necessary.
9. Straighten any coil fins damaged during the cleaning process.
10. Confirm the drain line is open following the cleaning process.
11. Allow the unit to dry thoroughly before putting it back into service.
12. Replace all panels and parts and restore electrical power to the unit.
13. Be careful any contaminated material does not contact other areas of the unit or building. Properly dispose of all contaminated materials and cleaning solution.

Coil Winterization

Water coil winterization procedures consist primarily of draining water from the coil before the heating season. Trane recommends flushing the coil with glycol if coils will be exposed to temperatures below 35 degrees.

NOTICE:
Coil Freeze-up!

Properly drain and vent coils when not in use. Trane recommends glycol protection in all possible freezing applications. Use a glycol approved for use with commercial cooling and heating systems and copper tube coils. Failure to do so could result in equipment damage.

Install field-fitted drains and vents to permit winterization of coils not in use and to assist in evacuating air from the water system during startup. If draining is questionable because of dirt or scale deposits inside the coil, fill the coil with glycol before the heating season begins.

Individual coil types determine how to properly winterize the coil. To determine the coil type find the "Service Model No of Coil" on the coil section nameplate. The coil type is designated by the second and third digits on that model number. For example, if the model number begins with "DUWB," the coil type is UW; if the model number begins with "DW0B," the coil type is W.

Note: *On many unit sizes, there are multiple coils in the coil section. Be sure to winterize all coils in a given coil section.*

Type D1, D2, WL, LL, UA, UW, UU, W, P2, P4, P8, WD, 5D, and 5W Coils

Note: *Use care in removing header plugs from Type P2, P4, and P8 coils. Over-torquing may result in twisted tubes.*

1. Remove the vent and drain plugs.
2. Blow the coil out as completely as possible with compressed air.
3. Fill and drain the coil several times with full strength glycol so that it mixes thoroughly with the water retained in the coil.
4. Drain the coil out as completely as possible.
5. To ensure no water remains in the coil, do not replace the vent and drain plugs until the coils are put back into service.

Moisture Purge Cycle

By it's very nature, any HVAC unit with a cooling coil serves as a dehumidifier, reducing the surrounding air's ability to hold water vapor as its temperature falls. This normally doesn't present a problem when the unit is running. However, when the fan stops, water vapor condenses on the cold metal surfaces inside the air handler and remains there until the air warms sufficiently to re-evaporate it. This damp, dark environment—though temporary—can encourage the growth of mold, mildew, and other microbial contaminants.

Providing a moisture purge cycle 15 to 30 minutes after shutdown disperses the cold, humid air inside the air-handling system more evenly throughout the building. This four-step cycle:

- Closes the outdoor air dampers.
- Turns off the cooling coil.
- Opens any variable-air-volume terminals connected to the air handler.
- Operates the supply fan for 10 to 15 minutes.

Air movement discourages water condensation and hastens re-evaporation of any condensate that does happen to form. This simple preventative measure effectively combats microbial growth and curbs moisture-related deterioration of air-handling components.

Cleaning Non-Porous Surfaces

⚠ WARNING
Hazardous Voltage!

Disconnect all electric power, including remote disconnects before servicing. Follow proper lockout/tagout procedures to ensure the equipment cannot be inadvertently energized. Failure to disconnect power before servicing could result in death or serious injury.

If microbial growth on a non-porous insulating surface (closed cell insulation or sheet metal surface) is observed:

1. Disconnect all electrical power to the unit.
2. Wearing the appropriate personal protective equipment, use a brush for sheet metal surfaces or a soft sponge on a foil face or closed cell foam surface to mechanically remove the microbial growth.

Note: *Be careful not to damage the non-porous surface of the insulation.*

3. Install a block-off to prevent spray from going into a dry section of the unit and/or system ductwork.
4. Thoroughly clean the contaminated area(s) with an EPA-approved sanitizer specifically designed for HVAC use.
5. Rinse the affected surfaces thoroughly with fresh water and a fresh sponge to prevent potential corrosion of the drain pan and drain line
6. Repeat steps 4 and 5 as necessary.
7. Confirm the drain line is open following the cleaning process.
8. Allow the unit to dry thoroughly before putting it back into service.
9. Replace all panels and parts and restore electrical power to the unit.
10. Be careful any contaminated material does not contact other areas of the unit or building. Properly dispose of all contaminated materials and cleaning solution.

Cleaning Porous Surfaces

⚠ WARNING

Hazardous Voltage!

Disconnect all electric power, including remote disconnects before servicing. Follow proper lockout/tagout procedures to ensure the equipment cannot be inadvertently energized. Failure to disconnect power before servicing could result in death or serious injury.

To clean a porous insulating surface (fiberglass insulation):

1. Disconnect all electrical power to the unit.
2. Wearing the appropriate personal protective equipment, use a vacuum device with a HEPA filter (99.97 percent efficient at 0.3 micron particles) to remove the accumulated dirt and organic matter.

Note: *Be careful not to tear the insulation surface or edges.*

3. Confirm the drain line is open following the cleaning process.
4. Allow the unit to dry thoroughly before putting it back into service.
5. Replace all panels and parts and restore electrical power to the unit.
6. Be careful any contaminated material does not contact other areas of the unit or building. Properly dispose of all contaminated materials and cleaning solution.

Ultraviolet (UV) Light Maintenance

The intensity of the ultraviolet energy emitted from the ultraviolet bulbs is dependent on the cleanliness and age of the bulb. The surface of the bulb should be kept as clean as possible for optimum intensity. Depending on the filtration level of the HVAC system and the general hygiene of the building, periodic cleaning may be necessary. Before attempting any maintenance procedures, always follow all warnings and cautions as detailed in this maintenance section.

⚠ WARNING

Hazardous Voltage and Exposure to Ultraviolet Radiation!

If UV lights are present in this unit, it contains components that emit high-intensity ultraviolet (UV-C) radiation which can be harmful to unprotected eyes and skin. Disconnect all electrical power, including remote disconnects before servicing. Follow proper lockout/tagout procedures to ensure the equipment cannot be inadvertently energized. Failure to disconnect power before servicing could result in death or serious injury.

⚠ WARNING

Hazardous Vapors!

If large numbers of UV bulbs are broken, an appropriate respirator should be considered to prevent inhalation of mercury vapors. Failure to use a respirator could result in death or serious injury.

⚠ CAUTION

Broken Glass!

Bulbs are fragile and can be easily broken. Always use gloves and eye protection when handling these bulbs. Failure to handle bulbs properly may result in minor to moderate injury. Refer to the MSDS sheet from the bulb manufacturer for additional safety information.

Cleaning the Bulbs

⚠ WARNING

Hazardous Voltage and Exposure to Ultraviolet Radiation!

If UV lights are present in this unit, it contains components that emit high-intensity ultraviolet (UV-C) radiation which can be harmful to unprotected eyes and skin. Disconnect all electrical power, including remote disconnects before servicing. Follow proper lockout/tagout procedures to ensure the equipment cannot be inadvertently energized. Failure to disconnect power before servicing could result in death or serious injury.

Note: *If bulbs are found to be broken, see the proper warnings and cautions below regarding broken bulbs and hazardous vapors.*

1. Disconnect all electrical power to the unit and the ultraviolet bulbs.
2. Wearing soft cloth gloves and safety glasses, use two hands and firmly grasp the bulb at each end.
3. Rotate the bulb 90 degrees in either direction and move bulb away from the fixture and out of unit.
4. Wipe down each bulb with a clean cloth and alcohol. Avoid touching the bulb with bare hands as skin oils can accelerate future glass soiling and degrade the bulb performance.
5. Carefully return the bulb to the fixture and rotate it 90 degrees in either direction until it is firmly secured.
6. Close and latch all unit panels and reenergize power to the lights.

Replacing the Bulbs

⚠ WARNING

Hazardous Voltage and Exposure to Ultraviolet Radiation!

If UV lights are present in this unit, it contains components that emit high-intensity ultraviolet (UV-C) radiation which can be harmful to unprotected eyes and skin. Disconnect all electrical power, including remote disconnects before servicing. Follow proper lockout/tagout procedures to ensure the equipment cannot be inadvertently energized. Failure to disconnect power before servicing could result in death or serious injury.

Ultraviolet bulbs should be replaced annually if operated continuously or after 9,000 hours of use if operated intermittently. Replacement bulbs must be the specific size and wattage as originally supplied from the factory.

Note: *Although the lights may continue to generate a characteristic blue glow beyond 9,000 operating hours, the ultraviolet radiation emitted by the bulbs degrades over time and will no longer provide the intended benefit.*

1. Disconnect power to the HVAC unit and the ultraviolet bulbs.
2. Wearing soft cloth gloves and safety glasses, use two hands and firmly grasp the bulb at each end.
3. Rotate the bulb 90 degrees in either direction and move bulb away from the fixture and out of unit.
4. Carefully install a new replacement bulb in the fixture and rotate it 90 degrees in either direction until it is firmly secured.
5. If broken bulbs are found or if you are required to dispose of used bulbs, follow the warning and caution below.

⚠ WARNING

Hazardous Vapors!

If large numbers of UV bulbs are broken, an appropriate respirator should be considered to prevent inhalation of mercury vapors. Failure to use a respirator could result in death or serious injury.

⚠ CAUTION

Broken Glass!

Bulbs are fragile and can be easily broken. Always use gloves and eye protection when handling these bulbs. Failure to handle bulbs properly may result in minor to moderate injury. Refer to the MSDS sheet from the bulb manufacturer for additional safety information.

6. Always use cloth gloves and suitable eye protection when cleaning or replacing these bulbs. Bulbs may break if dropped or handled improperly.

Disposal of Bulbs

UV bulbs, like fluorescent bulbs, contain mercury, which is a regulated hazardous waste. The disposal requirements for hazardous wastes are determined by local, state and federal guidelines. Check all regulations before disposing of bulbs to assure you have met all requirements.

Refer to the MSDS sheet from the bulb manufacturer for additional disposal, handling and safety information.

After replacing bulbs, close and latch all unit panels and reenergize power to the lights.

Notes

TRANE

Trane optimizes the performance of homes and buildings around the world. A business of Ingersoll Rand, the leader in creating and sustaining safe, comfortable and energy efficient environments, Trane offers a broad portfolio of advanced controls and HVAC systems, comprehensive building services, and parts.
For more information, visit www.Trane.com.

Trane has a policy of continuous product and product data improvement and reserves the right to change design and specifications without notice.

© 2011 Trane All rights reserved
CLCH-SVX07C-EN 20 May 2011
Supersedes CLCH-SVX07B-EN (01 May 2010)

Ingersoll Rand